TIMKEN

NATIONAL® INDUSTRIAL SEALS CATALOG

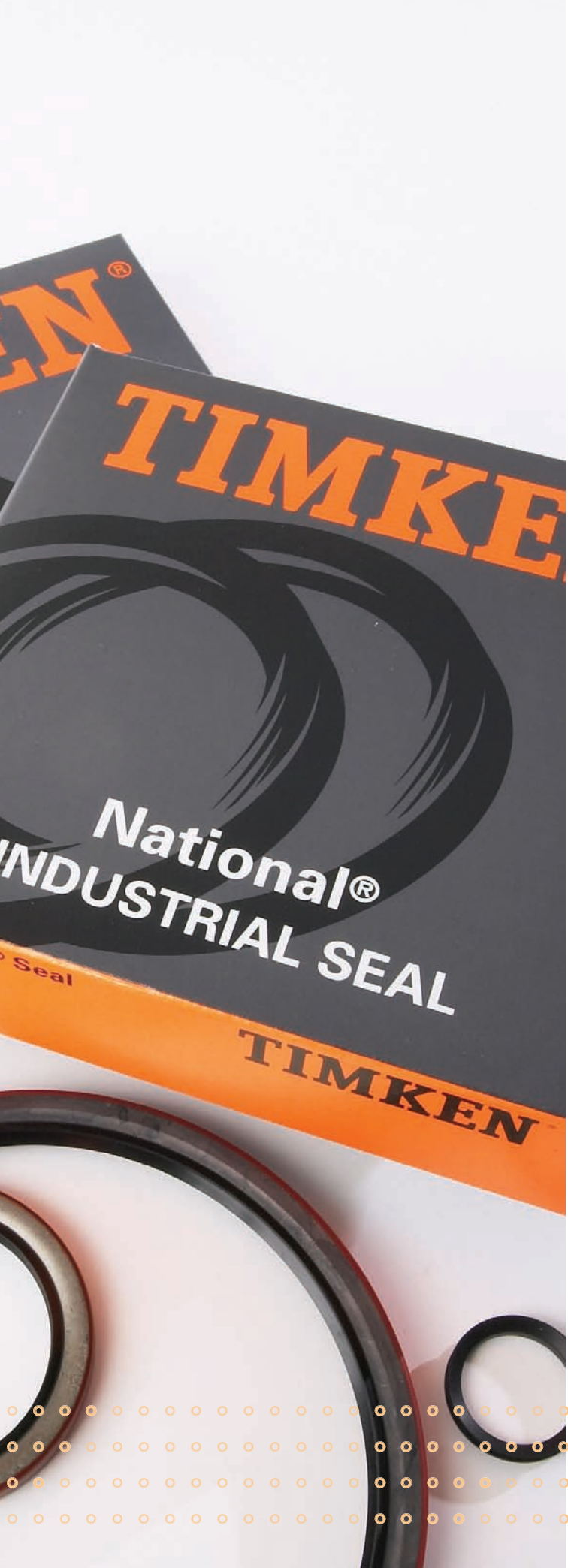

Timken

offers an extensive line of sealing solutions for original equipment manufacturers and the aftermarket. Our line of National® industrial seals is made from ***innovative*** *materials and process solutions that* ***enhance*** *life and performance in many industrial applications. This line of industrial seals adds value to the company's portfolio of friction management solutions. The seals are backed by the company's experienced technical support and distribution networks, giving* ***distributors*** *a single source for a wide range of bearings and* ***value-added extras*** *to help keep equipment running optimally.*

TIMKEN

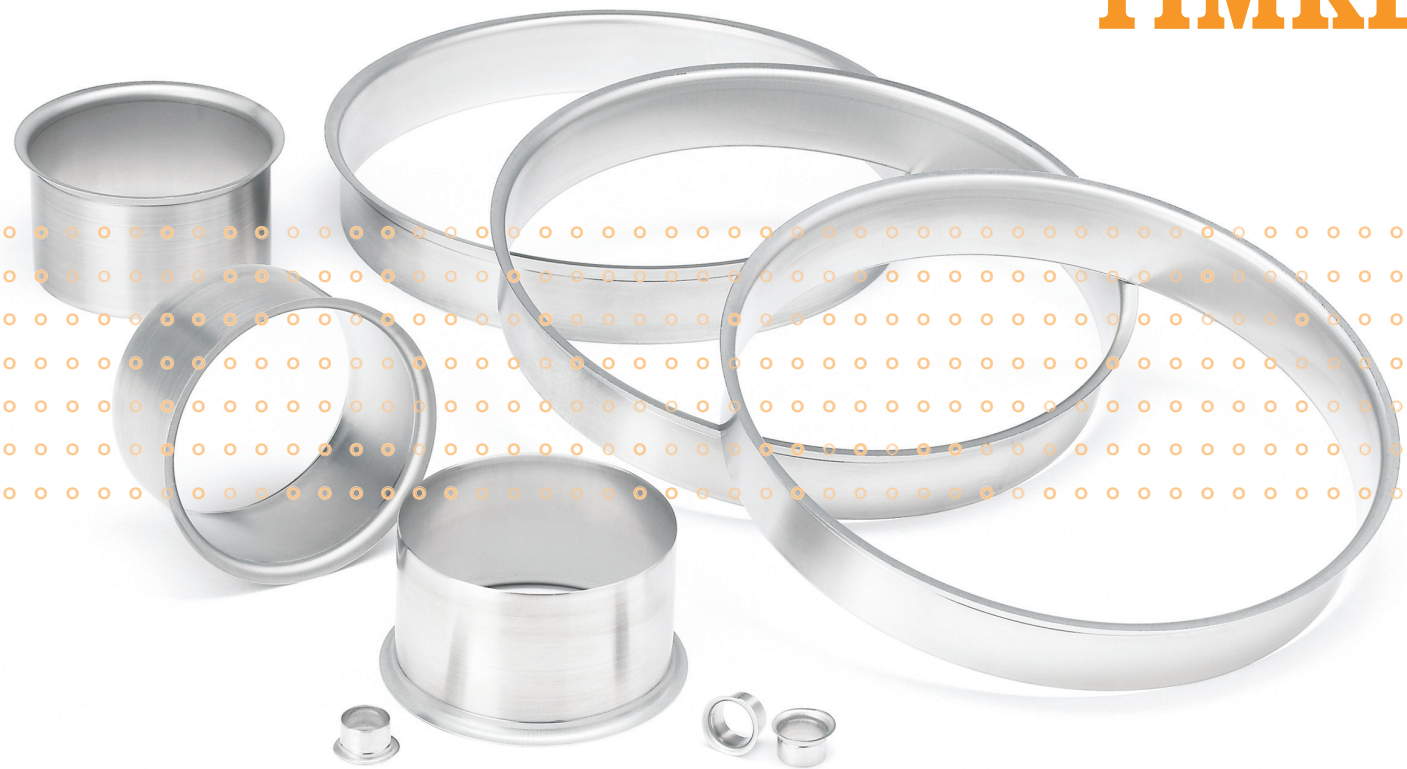

National®
Industrial Seals

Redi-Seals®

Sealing Solutions Custom Made Overnight

Timken offers cost-effective and quick sealing solutions that help reduce downtime and help keep equipment running smoothly. Redi-Seals® help minimize downtime since they are available within 24 hours and in the right quantities – even a single seal.

Through an innovative manufacturing process, Redi-Seals are produced without long lead times, which offers distributors a more flexible and efficient way of doing business. Timken offers 11 types of Redi-Seals, custom made to fit your design, size, application, material and other specifications.

Redi-Seals are unique, high-quality sealing devices that require specific information before manufacturing. When ordering, you will need to specify the following information:

- Seal design or type
- Size: ranging from 0.827" (21mm) shaft to 13" (330mm) housing bore
- Inch or metric size
- Seal applications: industrial, agricultural or vehicular
- Seal material: Nitrile or Viton®
- Special features, including split seals

CUSTOM SEALS IN 24 HOURS

Redi-Seal Specification Checklist

Although Redi-Seals are manufactured to the same exacting standards and specifications as the stock product lines, exact dimensions are required before a seal can be made.

Please review the specifications manual before contacting Timken. A Zero Duplication™ seal may already meet your sealing requirements.

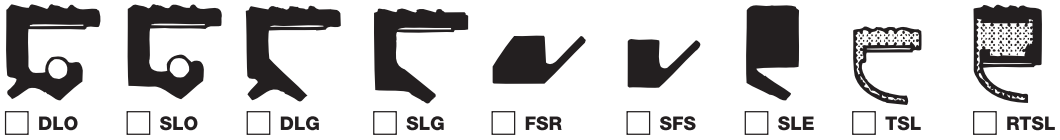

1. Choose a style. ***NOTE: SLO and DLO also are available in split designs.***

2. Measure the required dimensions to the nearest 0.001" or 0.05mm.

- ❑ Shaft Diameter _____
- ❑ Bore Diameter _____
- ❑ Width _____

3. Select the appropriate seal material

- ❑ Nitrile: -50° F to +250° F (-45° C to +121° C)
- ❑ Fluoroelastomer: -40° F to +400° F (-40° C to +205° C)
- ❑ PTFE: -650° F to +4500° F (-55° C to +232° C)
- ❑ R.O.D. PTFE (Type RTSL): -65° F to +300° F (-55° C to +150° C)

4. Note any important application details:

- ❑ Shaft Speed _____ RPM
- ❑ Temp Range _____
- ❑ Lubricant _____
- ❑ Comments _____

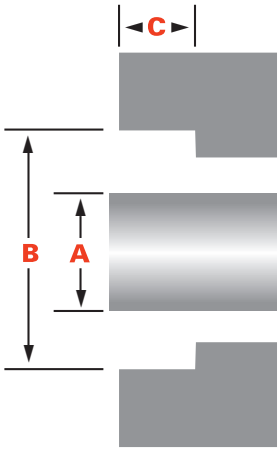

A) Shaft Diameter
B) Bore Diameter
C) Width

To order National industrial seals, contact your Timken sales representative or call 1.877.4.TIMKEN in the U.S. In Canada, call 1.800.565.4927 for English or 1.800.565.0438 for French-Canadian. Visit us on the Web at www.timken.com/industrialseals.

CAUTION: Redi-Seals are not recommended for the following applications:

- **Rear-wheel bearing seals on rear-wheel drive vehicles**
- **Stub-shaft seals on front-wheel-drive vehicles**
- **Automatic transmission front pump seals**
- **Power steering pump seals**
- **Any nuclear applications**
- **Any aircraft/aviation/aerospace applications**

Redi-Sleeves®

REPAIR DAMAGED SHAFTS ... OR PROTECT NEW ONES

Redi-Sleeves® offered by Timken are precision stainless steel wear sleeves, designed to be pressed onto a shaft to provide an enhanced sealing surface. Redi-Sleeves are fast, inexpensive repair options for grooved or worn shafts.

Redi-Sleeves are pressed onto a shaft where indications of seal wear, such as tracks or grooves, have developed. Using a Redi-Sleeve gives the shaft a smooth, ideal sealing surface.

Fast, Inexpensive Shaft Repairs

Timken's line of Redi-Sleeves are easy to install and feature a removable flange and an installation tool. When using Redi-Sleeves, you receive:

- Strong, durable stainless steel construction that provides a corrosion-free sealing surface
- Ultra-thin construction that allows original seal size to be used with minimal additional lip loading
- Redi-Sleeve sealing surfaces that are ground to a 10-20 microinch Ra (0.25-0.50 Micrometer Ra) finish without lead
- Options for shafts from 0.5" (12.7mm) to 8" (203mm) diameters

Redi-Sleeve Size Selection

Selecting the proper size Redi-Sleeve is key to making sure equipment is up and running faster. To select the correct size, measure the shaft diameter where the sleeve will be positioned – ahead of the wear path. Do not measure the track worn by the old seal. The shaft needs to be measured in three positions: 12 o'clock to 6 o'clock, 2 o'clock to 8 o'clock and 4 o'clock to 10 o'clock. Average the three readings together to compensate for possible shaft out of round or error in measurement. Use the averaged measurement to select a part number from the size chart provided.

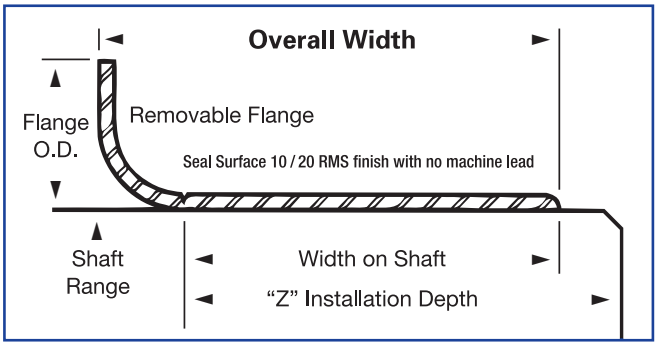

To order National industrial seals, contact your Timken sales representative or call 1.877.4.TIMKEN in the U.S. In Canada, call 1.800.565.4927 for English or 1.800.565.0438 for French-Canadian. Visit us on the Web at www.timken.com/industrialseals.

Shaft Repair Kits

Shaft Repair Kits provided by Timken save time and costly shaft replacements. These kits include the industry-tested, technician-approved seal in addition to a Redi-Sleeve.

To order National industrial seals, contact your Timken sales representative or call 1.877.4.TIMKEN in the U.S. In Canada, call 1.800.565.4927 for English or 1.800.565.0438 for French-Canadian. Visit us on the Web at www.timken.com/industrialseals.

KIT INFORMATION			INCH				METRIC			
Kit Number	Seal	Redi-Sleeve	Shaft Size	Housing Bore	Outside Diameter	Width	Shaft Size	Housing Bore	Outside Diameter	Width
412920K	412920	99225	2.250	3.371	3.376	0.375	57,15	85,62	85,75	9,53
470380K	470380	99149	1.500	2.375	2.378	0.312	38,10	60,33	60,40	7,92
470625K	470625	99150	1.500	2.250	2.254	0.312	38,10	57,15	57,25	7,92
470712K	470712	99112	1.125	1.874	1.878	0.250	28,58	47,60	47,70	6,35
471255K	471255	99062	0.625	1.375	1.379	0.250	15,88	34,93	35,03	6,35
471271K	471271	99248	2.500	3.251	3.256	0.375	63,50	82,58	82,70	9,53
471272K	471272	99225	2.250	3.000	3.005	0.375	57,15	76,20	76,33	9,53
471413K	471413	99125	1.250	1.752	1.756	0.250	31,75	44,50	44,60	6,35
471652K	471652	99112	1.125	1.624	1.628	0.250	28,58	41,25	41,35	6,35
471750K	471750	99125	1.250	1.983	1.987	0.250	31,75	50,37	50,47	6,35
471766K	471766	99125	1.250	2.000	2.004	0.250	31,75	50,80	50,90	6,35
472258K	472258	99133	1.375	2.000	2.004	0.312	34,93	50,80	50,90	7,92

Zero Duplication™ Program

Keep lubricants and other critical fluids in, water and other contaminants out.

By consolidating your inventory into one systematic collection of premium-quality seals, the Zero Duplication program offered by Timken provides comprehensive coverage while minimizing the number of replacement seals you carry in inventory.

Zero Duplication is an effective way to do more with less. This program features a special selection of oil seals that are designed to meet the requirements of applications with shaft diameters up to 12" or 300mm – with zero duplication of comparable seals.

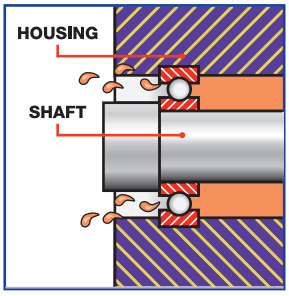

A seal keeps contaminants out and lubricants in to protect and extend bearing life.

Improve Coverage and Reduce Inventory

Each Zero Duplication seal offered by Timken effectively replaces several similar seals, providing comprehensive application coverage with less inventory. This line of seals incorporates the most effective performance features in a range of common sizes.

Design Features*

Spring-loaded, dual-lip sealing element. Uses two sealing lips, one spring-loaded tightly against the shaft to retain lubricants, the other functioning as a contaminant excluder.

Double-wall case. Reduces deformation to the case during installation and forms a secure, stable base for optimum sealing element performance.

Exclusive Redi-Coat® coating. Seals minor bore defects to help ensure a tight, leak-proof seal.

Optional fluoroelastomer sealing element (available in selected part numbers in addition to standard Nitrile seals). Provides excellent high-temperature capabilities, good compatibility with a wide range of fluids and long life.

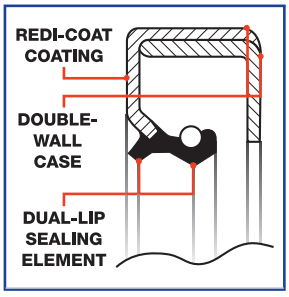

Typical Zero Duplication seal design.

*Seal designs may vary. Not all features are used in all Zero Duplication seals.

MORE EFFICIENT, MORE PROFITABLE SEAL INVENTORY MANAGEMENT

Trust Zero Duplication Seals for Optimal Performance

Typically, a seal is replaced by an identical seal. Zero Duplication seals, however, offer performance equal and often superior to original seals. Even if the width, case design or sealing elements differ, Zero Duplication seals can provide optimal performance.

The Zero Duplication program offers tangible advantages for your customers:

- Faster, more responsive customer service
- Optimal seals for a wide range of applications
- The right seals in stock

Three Zero Duplication stocking plans have been developed to maximize coverage:

- **Gold** (up to 6"/160mm shaft sizes) – seals used in heavy industry (pulp and paper mills, ore processing, mining operations)
- **Silver** (up to 4"/100mm shaft sizes) – seals used in general industry (including heavy-duty, high-horsepower motors)
- **Bronze** (up to 2.5"/60mm shaft sizes) – seals used in light-duty service (including motion-control equipment, conveying operations)

We can also develop a customized Zero Duplication assortment based on an analysis of your present inventory.

Determining Zero Duplication Coverage

Zero Duplication seals are available to fit shafts from 0.250" to 12" in diameter and bore sizes from 0.499" to 14". Metric Zero Duplication seals are available to fit shafts from 7mm to 300mm in diameter and bore sizes from 16mm to 340mm.

Any part number listed in the Industrial Seals catalog that is in bold-face type is a Zero Duplication seal.

To order National industrial seals, contact your Timken sales representative or call 1.877.4.TIMKEN in the U.S. In Canada, call 1.800.565.4927 for English or 1.800.565.0438 for French-Canadian. Visit us on the Web at www.timken.com/industrialseals.

Advantages of the Zero Duplication program:

- Faster, more responsive service
- Simple, easy replacement seal selection
- Simplified ordering process
- Reduced acquisition costs
- Reduced storage costs and requirements
- Elimination of obsolete seals

27576 - 29840

Competitor Number	National Size & Type	Zero Duplication or Recommended Industrial
29292	416654	**416654**
29292	475012	**416654**
29300	416654	**416654**
29305	47665N	**416654**
29310	416654	**416654**
29316	416654	**416654**
29317	416654	**416654**
29317	475012	**416654**
29322	475012	**416654**
29360	475012	**416654**
29370	416654	**416654**
29371	416654	**416654**
29375	416654	**416654**

Zero Duplication part numbers are listed in bold-faced type.

Using This Catalog

COMPLETE PRODUCT SELECTION DATA

Product Specification Section

The Specification section contains complete product data for Timken's line of National industrial seals. Size Listings for each style and type of seal or sleeve, as well as Material and compound selection guide, Compound compatibility chart, Recommended operation conditions chart, Installation instructions and Troubleshooting guidelines, also are included.

The Specification section contains an introduction, technical sections, complete size listings, numerical index, metric listing and seal/component design illustrations. All numbers are listed by size sequence and by the part number sequence.

Example:

PART NUMBER: If a part number is known and dimensional data is required, consult the **NUMERICAL LISTING**

DIMENSIONS: If the dimensions of a seal are known and a part number is required, consult the **SIZE LISTING** for specific information

Interchange Guide

The Interchange guide will assist in converting a competitor's part number to a corresponding seal. Begin by finding the identical first character of the product number (whether a letter or a numeral). Part numbers beginning with a letter will be listed in alphabetic, then numeric order.

All part numbers comprising numerals only will be listed in strict numeric order. For instances in which a letter appears in the middle of a part number (for example, 7A2125), the part number with the letter will be listed before any part numbers with a numeral in the same sequential position.

Example: **7A2125**
71250
Part number 7A2125 will be listed before part number 71250

TABLE OF CONTENTS

SECTION 1 - TECHNICAL — **Page Number**

A Oil Seal Design and Selection

- Types of Oil Seals II
- National Seal Part Numbering System II
- The Seal and Its Function III
- Oil Seal Nomenclature and Components IV
- Conversion Chart - RPM to FPM IV
- National Oil Seal Design Description . . . . . V-VI

B Sealing Element Compounds

- Materials and Compounds Available for Sealing Elements . . . VII
- Compound Selection Chart . . . . . VIII-XIV

C Sealing System Preparation and Seal Installation

- Storage and Handling of Oil Seals XV
- Shaft Requirements XVI
- Bore Requirements XVII
- Installation of Seals, Procedures, Guidelines and Tools XVIII

D General Information

- Oil Seal Distress Analysis, Trouble Shooting Checklist XIX
- Redi-Sleeves Installation and Removal XX
- National Wear Sleeves Description, Installation and Removal . XXI
- V-Seals Description, Material, Styles & Dimensional Reference XXII
- Seal Design Chart . . . . . XXIII-XXIV

SECTION 2 - SIZE LISTING

- Kits 123-126
- O-Rings 282-284
- Radial Shaft Seals 1-122
- Redi-Sleeve™ 130-133
- Wear Sleeves 127-129

SECTION 3 -NUMERICAL LISTING

- Kits 237-239
- Radial Shaft Seals 134-200
- Redi-Sleeve™ 243-246
- V-Seals 247-250
- Wear Sleeves 240-242
- Industrial Metric Seals 200-236
- Felt Seals 236

SECTION 4 - METRIC LISTING

- Seals listed according to sizes and types 251-281

SECTION 5 - INTERCHANGE GUIDE

- Alphabetical Listing 285-368
- Numerical Listing 369-663
- Abbreviations To Manufacturers 664-665

SECTION 1-A TECHNICAL

OIL SEAL DESIGN AND SELECTION

OIL SEAL NOMENCLATURE AND COMPONENTS

While industry has generally preferred the double lip or single lip, spring loaded seals, a wide variety of types and styles are produced to satisfy various application requirements.

To simplify the identification process of the oil seals a Type/Illustration column has been included in the Size, Numerical and Metric Listings of this catalog. The Type/Illustration number refers to the Oil Seal Illustration Chart. Just find the number on the illustration chart and the configuration of the component can be identified.

The National® Oil Seal Design Description is provided to illustrate seal types and to provide operating data and limitations for typical applications. Factors relative to oil seal design and selection are also reviewed. After size, application and seal requirements are determined, the proper seal can be located in the Size Section. Likewise, when the National part number is known, the size and type can be easily located in the Numerical Section.

NATIONAL SEAL PART NUMBERING SYSTEM

The National Oil Seal Engineering Department assigns the part numbers for all general purpose and special purpose seals. Each type and size combination manufactured is identified by an individual part number.

Three numbering systems are generally used to identify National Oil Seals:

1. General Purpose Seals—Five or six digit numbers. The first one or two digits usually signify seal type or construction. The last four digits refer to a specific assigned shaft and bore size combination but do not indicate seal size.They are assigned in consecutive order as a new shaft/bore combination is established. It may be possible to interchange seals for which the first one or two digits are different but for which the following digits are the same. Such an interchange determination should be based on whether alternative seal designs would meet the requirements of the specific application. Letter suffixes to part numbers within this manual usually refer to the sealing lip compound used.
2. A four digit number system is used for some seals and general purpose seal kits with primarily automotive applications. The numbers have been assigned consecutively and do not relate to seal size.
3. Preassigned blocks of numbers are used to identify certain groups of miscellaneous and special purpose seals:

370000A — Wheel End Seals
380000A — PTFE Wheel End Seals
39000 to 39999 — PTFE Seals
410000 to 499999 — Plain Round
710000 to 799999 — Misc. Round Application
99000 — Redi Sleeves

200000 to 200500 — Triple Lip Designs
200600 to 200899 — Triple Lip Designs External
200900 to 200999 — Dual-Lip Design
201000 to 205999 — Wheel Seals
220000 to 230000 — Automotive Metric
800000 — V-Seals
J, JV, JX etc. — Wear Sleeves

If an oil seal has a prefix and/or suffix that is not included within this manual, contact your regional Timken Representative for more specific information.

OIL SEAL DESIGN AND SELECTION

THE SEAL AND ITS FUNCTION

Oil Seal Definition

As products, oil seals may be simply described as devices that close or *seal* the spaces between stationary and moving components in mechanical equipment . . .*they prevent lubricant from escaping*.

Oil seals often called grease, fluid or dirt seals are the vital components of practically every type of machine and vehicle in operation. These seals fulfill an exacting function . . . they protect all types of precision constructed, close fitting ball, sleeve and roller bearings.

Oil Seal Function

Oil seals are used wherever shafts rotate and bearings require lubrication. In short, a seal is a barrier with three basic functions: 1) Retaining lubricants and liquids 2) Excluding contaminants 3) Seal or separate dissimilar fluids or gases.

- Precision bearings rely on the oil seal to prevent lubricants from escaping the bearings or a specific area.
- Components of machines rely on the oil seal to prevent abrasives, corrosive moisture and other harmful contaminants from entering the mechanics of the machine.
- Separation of fluids and gases may completely rely on the seal to prevent intermixture of two different mediums such as lubricating oil and water.

Oil Seal In Use

In a typical application, the oil seal is installed adjacent to a bearing, sealing in or sealing out, as necessary, the various liquids, gases or solids encountered by the particular mechanism.

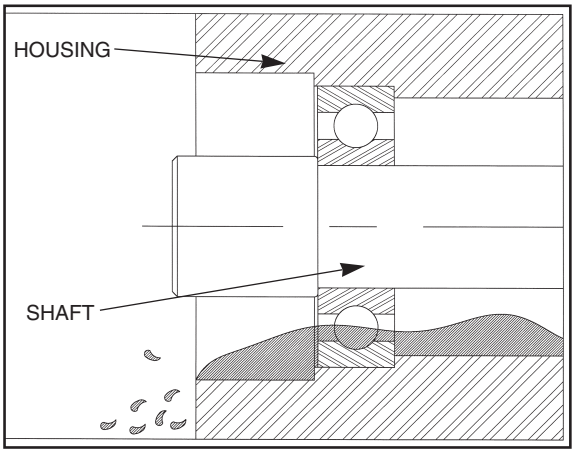

Without an oil seal . . . essential lubricant can escape through the bearing and . . . harmful dirt and foreign matter can enter.

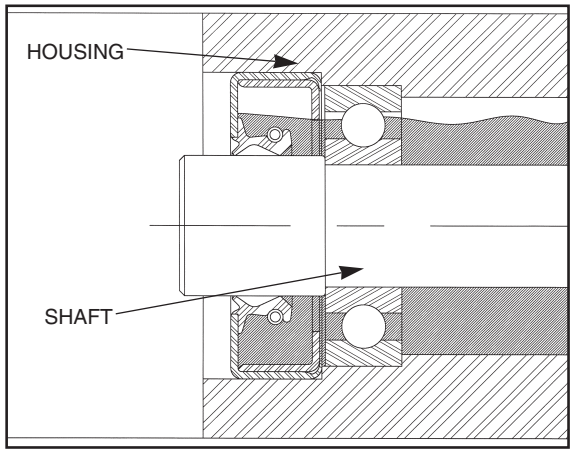

With a properly designed and fitted oil seal . . . the space between the housing and shaft is securely closed or sealed. Lubricant cannot escape . . . harmful dirt and foreign matter cannot enter.

SECTION 1-A TECHNICAL

OIL SEAL DESIGN AND SELECTION

OIL SEAL NOMENCLATURE AND COMPONENTS

The Society of Automotive Engineers (SAE) and the American Society of Testing Materials (ASTM) have developed and adapted a standard to identify component parts that make up an oil seal, as well as terminology and basic lip seal designs.

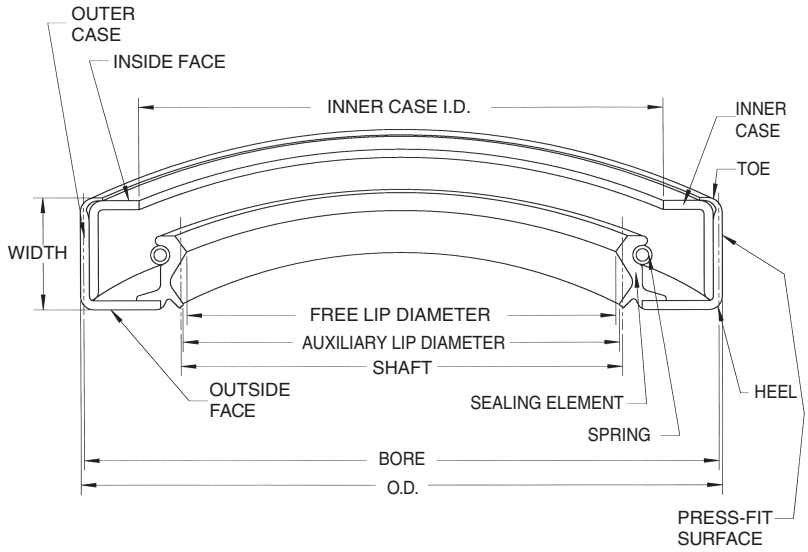

CONVERSION CHART - RPM TO FPM

Shaft Diameter is in inches

SHAFT DIAMETER

SHAFT SPEED

SPEED RANGE	RPM	1/2"	3/4"	1"	1-1/4"	1-1/2"	1-3/4"	2"	2-1/2"	3"	3-1/2"	4"	5"	6"	7"	8"	9"	10"
	100	13	20	26	33	39	46	52	65	79	92	105	131	157	183	209	236	262
	300	39	59	79	98	118	137	157	196	236	275	314	393	471	550	628	707	785
	500	65	98	131	164	196	229	262	327	393	458	524	654	785	916	1047	1178	1309
	1000	131	196	262	327	393	458	524	654	785	916	1047	1309	1571	1833	2094	2356	2618
	1500	196	295	393	491	589	687	785	982	1178	1374	1571	1963	2356	2749			
	2000	262	393	524	654	785	916	1047	1309	1571	1833	2094	2618					
SLOW	2500	327	491	654	818	982	1145	1309	1636	1963	2291	2618						
	3000	393	589	785	982	1178	1374	1571	1963	2356	2749							
	3500	458	687	916	1145	1374	1604	1833	2291	2749								
	4000	524	785	1047	1309	1571	1833	2094	2618									
	4500	589	884	1178	1473	1767	2062	2356	2945									
	5000	654	982	1309	1636	1963	2291	2618										
	6000	785	1178	1571	1963	2356	2749											
	7000	916	1374	1833	2291	2749												
	8000	1047	1571	2094	2618													
	9000	1178	1767	2356	2945													
MODERATE	10000	1309	1963	2618														
	12000	1571	2356															
	14000	1833	2749															
	16000	2094																
HIGH	18000	2356																
	20000	2618																

This table is carried out to the limits of the recommended speeds expressed in FPM (feet-per-minute) for seals of standard construction. Sizes and speeds beyond this table require special analysis of all conditions related to the application. For intermediate shaft sizes of RPM, the standard procedure of interpolation will apply.

SECTION 1-A TECHNICAL

OIL SEAL DESIGN AND SELECTION

NATIONAL OIL SEAL DESIGN DESCRIPTION

Type Description	Representative Cross-Sections of Sealing Elements	Type Numbers	Shaft Speeds Feet Per Minute
Spring Loaded Design Single Lip		5L, 5S, 33, 35, 45, 48, 51, 54, 62, 75, 83, 91, 100	3000
Spring Loaded Design Multi-Lip		1L, 1S, 2L, 2S, 3L, 21, 25, 30, 32, 40, 41, 43, 47, 52, 56, 57, 59, 61, 66, 68, 69, 70, 71, 72, 74, 76, 78, 79, 86, 87, 88, 90, 92, 93, 94, 96, 99	3000
Spring Loaded "Convolute" Design		64, 65	3000
Springless Designs Single-Lip For Grease Retention And Slow Speed Applications		4L, 4S, 24, 29, 31, 34, 44, 201, 203, 204, 205, 230, 271, 272, 273, 277, 278, 279, 283, 290	2000 Type 4L 1000
Springless Designs Multi-Lip For Grease Retention And Slow Speed Applications		49, 97, 98, 274, 276, 280, 281, 282, 284, 285, 286, 287	2000
External Lip To Seal At Bore Slow Speed Applications		8L, 8S, 26, 36, 46, 200, 200E	750
Spring Loaded Dual Opposing Lips Separates 2 Fluids	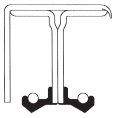	7L, 7S	3000
Dual Spring Loaded Same Direction Inner Lip Stems Lube Surges	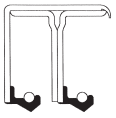	9L, 9S	3000
Utilized Oil Bath Seal Design H.D. Truck & Trailer Hubs		37-1,2,3,4,5,6,7,8,9,10,11,12	3000
General Purpose PTFE Design	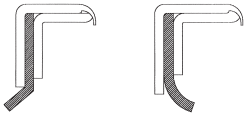	D, F, P, W	6500

VAMAC® THE REGISTERED TRADEMARK OF E I DUPONT
AFLAS® IS A REGISTERED TRADEMARK OF 3M COMPANY

SECTION 1-A TECHNICAL

OIL SEAL DESIGN AND SELECTION

NATIONAL OIL SEAL DESIGN TYPE DESCRIPTION

Maximum Pressure PSI @ FPM	Shaft Finish (Micro Inch) μ	Shaft Hardness	STBM Maximum (Shaft to Bore Misalignment @ RPM	Maximum Shaft Dynamic Runout (DRO)
7 @ 1000 FPM 5 @ 2000 FPM 3 @ 3000 FPM	10-20	Above Rockwell C-45	.015" ECC @ 800 RPM .010" ECC @ 4200 RPM	.025" TIR @ 800 RPM .020" TIR @ 2200 RPM .015" TIR @ 4200 RPM
7 @ 1000 FPM 5 @ 2000 FPM 3 @ 3000 FPM	10-20	Above Rockwell C-45	.020" ECC @ 4200 RPM	.060" TIR @ 4200 RPM
Atmospheric	10-25	Above Rockwell C-45	.005" ECC	.005" TIR
Atmospheric	10-25	Above Rockwell C-45	.010" ECC	.010" TIR
7 @ 1000 FPM 5 @ 2000 FPM 3 @ 3000 FPM	10-20	Above Rockwell C-45	.015" ECC @ 800 RPM .010" ECC @ 4200 RPM	.025" TIR @ 800 RPM .020" TIR @ 2200 RPM .015" TIR @ 4200 RPM
2 @ 2000 FPM	100 Max.	Above Rockwell C-45	.010" ECC Max.	.015" TIR

SECTION 1-B TECHNICAL

Sealing Element Compounds

MATERIALS AND COMPOUNDS AVAILABLE FOR SEALING ELEMENTS

The environments in which a seal will operate should be determined before selecting the sealing element or lip material. Two of the most important factors in material selection are Lubricant Temperature and Type.

National Oil Seals offer a variety of sealing lip materials and compounds. The temperature limitations and fluid/lubricant compatibility for most compounds are shown within the Compound Selection Chart on the following pages.

National Seals are used in a wide range of applications. The seal is part of a system and is dependent on proper shaft and bore operation to function correctly.

Runout, lubrication, shaft-to-bore misalignment, shaft speed, temperature, and other factors vary greatly from one application to another and each may affect the seal's life. In a perfect system, these factors would be nominalized to achieve maximum life for all components. To assist our customers in getting maximum performance from their sealing system, we have provided recommendations below.

Operating a seal at one extreme condition will have a small effect on seal life. However, when a seal is operating at multiple extremes in the system, it will have a much greater impact on performance. Therefore, we ask you to use the following recommendations as a guide to achieving the maximum performance from your seal. Each material or compound has been assigned a specific letter code and is referenced in various tables and listings throughout this manual.

Compound	Code	Advantages	Disadvantages/Limitations	Range	Substitute	Code
Felt	F	Adequate seal for heavy lubricants. Primarily a wiper seal.	Poor performance at low shaft speeds. Inadequate when excessive moisture is present.	-65°F to 200°F -48°C to 93°C	Nitrile Polyacrylic Vamac® Flouroelastomer Aflas® PTFE	S N E V A T
Leather	L	Good dry running capabilities.	Poor heat resistance. More expensive than Nitrile.	-50°F to 200°F -46°C to 93°C	Nitrile Polyacrylic Vamac® Flouroelastomer Aflas® PTFE	S N E V A T
Urethane	U	Good lubricant and ozone resistance. Good abrasion resistance. Durable, less susceptible to damage during installation than Silicone	Undergoes substantial softening above 250°F Poor resistance to hot water or steam.	Dependent upon exact compound and usage.	None	
Nitrile	S	Low cost. Good low temp. capability. Low swell in hydrocarbon fluids.	Does not have excellent heat resistance. Poor resistance to lubricants containing sulphur or EP additives, hydrocarbons/ oxygenate blends (gasoline/methanol). Poor ozone resistance.	-40°F to 225°F -40°C to 107°C	Polyacrylic Vamac® Fluoroelastomer Aflas® PTFE	N E V A T
Polyacrylate	N	Resistance to EP lubricants. Higher heat capabilities than Nitrile. Low swell in hydrocarbon fluids.	Limited low temperature capability. Poor dry running capability. Subject to attack in aqueous media. Higher cost than Nitrile	-20°F to 300°F -29°C to `49°C	Vamac® Fluoroelastomer Aflas® PTFE	E V A T
Ethylene-Acrylic (Vamac®)	E	Higher heat capabilities than Nitrile or Polyacrylic. Better low temp. performance than Polyacrylic. Good abrasion and dry running capability. Intermediate cost.	High swell in hydrocarbon fluids. Limited capabilities to follow eccentric shafts or perform in high frequency applications.	-30°F to 325°F -34°C to 163°C	Fluoroelastomer Aflas® PTFE	V A T
Silicone	H	Good dry heat resistance. Excellent low temperature capability.	Easily damaged during installation. Poor chemical resistance to certain EP additives and oxidized oil. High swell, poor dry running performance Higher cost than Nitrile.	-80°F to 350°F -62°C to 176°C	Fluoroelastomer Aflas® PTFE	V A T
Fluoro-Elastomer	V	Excellent high temperature capabilities. Compatible with wide range of fluids. Very long life.	Poor resistance to basic (high ph>7) fluids. Attack by high performance gear lubes. Expensive relative to other materials.	-40°F to 400°F -40°C to 204°C	Aflas® PTFE	A T
Tetrafluoro-Ethylene Propylene (Aflas®)	A	Better chemical resistance to all hydrocarbon fluids, acids, bases and oxidizing agents than Fluoroelastomers. Capable of performing in the complete range of hydraulic fluids. Continuous heat resistance over 400°F. Fair dry abrasion and radiation resistance.	Poor chemicl resistance to hydrocarbon/oxygenate blends (gasoline/methanol). Poor low temperature capabilities. More expensive than Fluoroelastomers.	-30°F to 400°F -34°C to 204°C	PTFE	T
PTFE	T	Excellent dry running capabilities. Low coefficient of friction. Excellent chemical resistance. Resistant to hydrocarbon/oxygenate blends.	Poor abrasion resistance to dirty environments. High thermal expansion. Susceptible to damage during iinstallation.	-100°F to 450°F -73°C to 232°C	None	

VAMAC® THE REGISTERED TRADEMARK OF E I DUPONT

AFLAS® IS A REGISTERED TRADEMARK OF 3M COMPANY

SECTION 1-B TECHNICAL

SEALING ELEMENT COMPOUNDS
Compound Selection Chart

Properties	S Nitrile	N Acrylates	E Vamac®	H Silicone	V Fluoroelastomers	A Aflas®
Durometer	60-80	70-75	70-90	80-90	75-85	75-95
Oil Resistance	Very Good	Fair	Good	Fair	Excellent	Excellent
Abrasion Resistance	Excellent	Fair	Good	Poor	Good	Good
Max. Service Temp.	225°F	300°F	325°F	350°F	400°F	400°F
Min. Service Temp.	-40°F	-20°F	-30°F	-80°F	-40°F	-30°F

Ratings: 1 = Minor effect 2 = Moderate effect 3 = Static only 4 = Not Recommended — = insufficient data

Elastomer	S	N	E	H	V	A
Acetaldehyde	4	4	3	2	4	4
Acetamide	1	4	1	2	2	1
Acetic Acid, Glacial	3	4	4	2	3	4
Acetic Acid, 30%	2	4	3	1	2	4
Acetic Anhydried	3	4	3	3	4	4
Acetone	4	4	4	3	4	4
Acetophenone	4	4	4	4	4	4
Acetyl Chloride	4	4	4	3	1	1
Acetylene	1	4	4	2	1	1
Acrylonitrile	4	4	4	4	3	2
Adipic Acid	1	—	2	2	—	1
Aero Shell 17 Grease	1	—	2	4	1	1
Aero Shell 750	2	—	2	4	1	1
Aero Shell 7 A Grease	1	—	2	2	1	1
Aero Shell IAC	1	—	—	—	1	1
Alkazene (Dibromoethylbenzene)	4	4	4	4	2	2
Alum-NH_3-Cr-K(aq)	1	4	4	1	4	2
Aluminum Acetate (aq)	2	4	4	4	4	3
Aluminum Chloride (aq)	1	1	1	2	1	1
Aluminum Floride (aq)	1	—	—	2	1	1
Aluminum Nitrate (aq)	1	—	—	2	1	1
Aluminum Phosphate (aq)	1	—	—	1	1	1
Aluminum Sulfate (aq)	1	4	1	1	1	1
Ammonia Anhydrous	2	4	4	3	4	1
Ammonia Gas (Cold)	1	4	4	1	4	1
Ammonia Gas (Hot)	4	4	4	1	4	1
Ammonium Carbonate (aq)	4	4	4	—	—	1
Ammonium Chloride (aq)	1	—	1	—	1	1
Ammonium Hydroxide (conc)	4	4	4	1	2	1
Ammonium Nitrate (aq)	1	2	2	—	—	1
Ammonium Nitrite (aq)	1	—	—	2	—	1
Ammonium Persulfate (aq)	4	4	—	—	—	1
Ammonium Phosphate (aq)	1	—	—	1	—	1
Ammonium Sulfate (aq)	1	4	1	—	4	1
Amyl Acetate (Banana Oil)	4	4	4	4	4	4
Amyl Alcohol	2	4	4	4	2	3
Amyl Borate	1	—	—	—	1	1
Amyl Chloronapthalene	4	4	4	4	1	2
Amyl Naphthalene	4	2	3	4	1	1
Aniline	4	4	4	4	3	1
Aniline Dyes	4	—	4	4	4	1
Aniline Hydrochloride	4	4	4	3	2	2
ANILINE OILS	2	4	2	4	2	1
Animal Fats	2	1	4	2	1	1
Ansul Ether (Anesthetics)	1	4	1	4	4	4
API GL-5	3	1	4	4	1	1
Aqua Regina	4	4	4	4	2	2
Aroclor, 1248	3	4	4	2	1	1
Aroclor, 1254	4	4	4	3	1	1
Aroclor, 1260	1	4	4	2	1	1
Arsenic Acid	1	3	4	1	1	1
Arsenic Trichloride (aq)	1	—	—	—	—	—
Askarel	2	4	4	4	1	1
Asphalt	2	2	—	4	1	1
ASTM Method D-471						
1.	1	1	1	3	1	1
2.	1	1	2	3	1	1
3.	1	1	3	3	1	2
ASTM #4 Method D-471	2	—	—	4	1	—
ASTM Ref Fuel A (MIL-2-3136B (Type 1)	1	2	2	4	1	2
ASTM Ref Fuel B (MIL-S-3136B (Type 3)	1	—	2	4	1	2
ASTM Reference Fuel C	2	4	3	4	1	2
ATF Type (Mercon)	1	1	2	2	1	1
ATF Type A	1	1	2	2	1	1
ATF Type F	1	1	2	2	1	1
ATF Type I	1	1	2	2	1	1
ATF Type II	1	1	2	2	1	1
Automotive Brake Fluid	4	—	4	4	4	4
Banana Oil (Amyl Acetate)	4	4	4	4	4	4
Barium Chloride (aq)	1	1	2	1	1	1
Barium Hydroxide (aq)	1	4	2	1	1	1
Barium Sulfate (aq)	1	4	2	1	1	1
Barium Sulfide (aq)	1	4	2	1	1	1
Beer	1	4	1	1	1	1
Beet Sugar Liquors	1	4	2	1	1	1
Benzaldehyde	4	4	4	2	4	4
Benzene	4	4	4	4	1	2
Benzene Sulfonic Acid	4	4	4	4	1	1
Benzine (Ligroin) (Nirtobenzine) (Pet Ether)	1	1	—	4	1	1
Benzoic Acic	3	3	2	3	1	1
Benzoyl Chloride	4	4	4	—	1	1
Benzyl Alcohol	4	4	4	2	1	2
Benzyl Benzoate	4	4	4	—	1	1
Benzyl Chloride	4	4	4	4	1	1
Biphenyl (Diphenyl) (Phenylbenzene)	4	4	4	4	1	1
Blast Furnace Gas	4	4	4	1	1	1
Bleach Solutions	4	4	4	2	1	1
Borax	2	2	1	2	1	1
Bordeaux Mixture	2	4	4	2	1	1
Boric Acid	1	4	1	1	1	1
Brake Fluid (Non-Petroleum)	4	—	4	4	4	4
Brake Fluid (Wagner 21B)	3	—	4	3	4	3
Brine	1	4	3	1	1	1
Bromine-Anhydrous	4	4	4	4	1	1
Bromine Triflouride	4	4	4	4	4	2
Bromine Water	4	4	4	4	1	1
Bromobenzene	4	4	4	4	1	1
Bunker Oil	1	1	2	2	1	1

Properties	S Nitrile	N Acrylates	E Vamac®	H Silicone	V Fluoroelastomers	A Aflas®

Ratings: 1 = Minor effect 2 = Moderate effect 3 = Static only 4 = Not Recommended — = insufficient data

Elastomer	S	N	E	H	V	A
Butadiene	4	4	4	4	1	1
Butane	1	1	2	4	1	1
Butter (Animal Fat)	1	1	1	2	1	1
Butyl Acetate	4	4	4	4	4	4
Butyl Acetyl Ricinoleate	3	—	—	—	1	—
Butyl Acrylate	4	4	4	—	4	4
Butyl Alcohol	1	4	1	2	1	1
Butyl Amine	3	4	4	4	4	2
Butyl Benzoate	4	4	4	—	1	1
Butyl Carbitol	4	4	4	4	1	4
Butyl Cellosolve	3	4	4	—	4	4
Butyl Oleate	4	—	2	—	1	1
Butyl Stearate	2	—	1	—	1	1
Butylene	2	4	1	4	1	1
Butyraldehyde	4	4	4	4	4	2
Calcium Acetate(aq)	2	4	4	4	4	3
Calcium Bisulfite (aq)	4	4	2	1	1	1
Calcium Carbonate	1	—	1	1	1	1
Calcium Chloride (aq)	1	1	1	1	1	1
Calcium Hydroxide (aq)	1	4	2	1	1	1
Calcium Hypochlorite (aq)	2	4	2	2	1	1
Calcium Nitrate (aq)	1	1	1	2	1	1
Calcium Phosphate	1	—	1	1	1	1
Calcium Salts	1	—	1	—	—	1
Calcium Sulfide (aq)	1	4	4	2	1	1
Cane Sugar Liquors	1	4	1	1	1	1
Carbamate	3	4	4	—	1	1
Carbitol	2	4	3	2	2	4
Carbolic Acid (Phenol)	4	4	4	4	1	1
Carbon Bisulfide	3	3	4	4	1	1
Carbon Dioxide	1	—	1	2	1	1
Carbonic Acid	2	1	1	1	1	1
Carbon Monoxide	1	—	1	1	1	1
Carbon Tetrachloride	3	4	4	4	1	4
Castor Oil	1	1	2	1	1	1
Cellosolve	4	4	4	4	3	4
Cellosolve Acetate	4	4	4	4	4	4
Cellulube (Fryquel)	4	4	4	1	1	1
China Wood Oil (Tung Oil)	1	—	2	4	1	1
Chlorine (Dry)	4	4	4	4	1	1
Chlorine (Wet)	4	4	4	4	1	1
Chlorine Dioxide	4	4	4	—	1	1
Chlorine Trifluoride	4	4	4	4	4	4
Chloroacetic Acid	4	4	4	—	4	4
Chloroacetone	4	4	4	4	4	4
Chlorobenzene	4	4	4	4	1	1
Chlorobromomethane	4	4	4	4	1	1
Chlorobutadiene	4	4	4	4	1	1
Chlorododecane	4	4	4	4	1	1
Chloroform	4	4	4	4	1	4
O-Chloronaphthalene	4	4	4	4	1	1
1-Chloro-1-Nitro Ethane	4	4	4	4	4	2
Chlorosulfonic Acid	4	4	4	4	4	2
Chlorotoluene	4	4	4	4	1	2
Chlorox (Sodium Hypochlorite NaOC1)	2	4	4	2	1	1
Chrome Plating Solutions	4	4	4	2	1	1
Chromic Acid	4	4	4	3	1	1
Citric Acid	1	—	1	1	1	1
Coal Tar (Creosote)	1	1	4	1	1	
Cobalt Chloride (aq)	1	4	4	2	1	1

Elastomer	S	N	E	H	V	A
Cocoanut Oil	1	1	1	1	1	1
Cod Liver Oil	1	1	2	2	1	1
Coke Oven Gas	4	4	3	2	1	1
Copper Acetate (aq)	2	4	4	4	4	4
Copper Chloride (aq)	1	1	1	1	1	1
Copper Cyanide (aq)	1	1	2	1	1	1
Copper Sulfate (aq)	1	4	1	1	1	1
Corn Oil	1	1	1	1	1	1
Cottonseed Oil	1	1	1	1	1	1
Creosote (Coal Tar)	1	1	4	4	1	1
Cresol	4	4	4	4	1	1
Cresylic Acid	4	4	4	4	1	1
Crude Oil	2	—	2	4	1	1
Cumene	4	4	4	4	1	1
Cutting Oil	1	—	2	4	1	1
Cyclohexane	1	1	3	4	1	2
Cyclohexanol	3	—	1	4	1	2
Cyclohexanone	4	4	4	4	4	2
P-Cymene	4	4	4	4	1	1
DC44M Hi Temp Silicone Grease	3	3	3	3	1	1
Decaline	4	—	—	4	1	1
Decane	1	1	2	2	1	2
Delco Brake Fluid	4	—	4	4	4	4
Denatured Alcohol	1	4	3	1	1	1
Detergent Solutions	1	4	1	1	1	1
Developing Fluids	1	—	2	1	1	1
Dextron	1	—	2	4	1	1
Diacetone	4	4	4	4	4	4
Diacetone Alcohol	4	4	4	2	4	4
Dibenzyl Ether	4	—	4	—	4	4
Dibenzyl Sebecate	4	4	4	3	2	2
Dibromoethylbenzene (Alkazene)	4	4	4	4	2	2
Dibutyl Amine	4	4	4	3	4	1
Dibutyl Ether	4	3	4	4	3	2
Dibutyl Phthalate	4	4	4	2	3	1
Dibutyl Sebecate	4	4	4	2	2	1
O-Dichlorobenzene	4	4	4	4	1	1
Dichloro-Isopropyl Ether	4	3	4	4	3	4
Dicyclohexylamine	3	4	—	—	4	1
Diesel Oil	1	1	1	4	1	2
Di-Ester Lubricant (MIL-L-7808)	2	—	4	4	1	2 or 3
Di-Ester Synthetic Lubricant	2	—	4	4	1	2 or 3
Diethylamine	2	4	4	2	4	1
Diethyl Benzene	4	—	—	4	1	1
Diethyl Ether	4	3	4	4	4	4
Diethylene Glycol	1	2	1	2	1	1
Diethyl Sebecate	2	4	4	2	2	1
Diisobutylene	2	4	4	4	1	1
Diisopropyl Benzene	4	—	—	—	1	1
Diisopropyl Ketone	4	4	4	4	4	4
Diisopropylidene Acetone (Phorone)	4	4	4	4	4	4
Dimethyl Aniline (Xylidine)	3	4	4	4	4	2
Diethyl Ether (Methyl Ether) (Monomethyl Ether)	1	4	4	1	1	3
Dimethyl Formamide	2	4	3	2	4	4
Dimethyl Phthalate	4	4	4	—	2	1
Dinitrotoluene	4	4	4	4	4	4
Dioctyl Phthalate	3	4	4	3	2	1

SECTION 1-B TECHNICAL

Properties	S Nitrile	N Acrylates	E Vamac®	H Silicone	V Fluoroelastomers	A Aflas®

Ratings: 1 = Minor effect 2 = Moderate effect 3 = Static only 4 = Not Recommended — = insufficient data

Elastomer	S	N	E	H	V	A
Dioctyl Sebecate	4	4	4	3	2	1
Dioxane	4	4	4	4	4	4
Dioxalane	4	4	4	4	4	4
Dipentene	2	4	4	4	1	1
Diphenyl (Biphenyl) (Phenylbenzene)	4	4	4	4	1	1
Diphenyl Oxides	4	4	4	3	1	1
Dowtherm Oil	4	4	2	3	1	1
Drink Water (See Note Re. Water)	1	—	1	1	1	1
Dry Cleaning Fluids	3	4	3	4	1	2
Elco 28-EP Lubricant	1	—	1	4	1	1
Engine Oil (Diester Motor Oil)	2	1	2	1	1	1
Engine Oil (Hydrocarbon Motor Oil)	1	1	1	1	1	1
Epichlorohydrin	4	4	4	4	4	4
EP Lubes	2	1	2	4	1	1
ESSO GX 80W90 (GL-5)	2	1	2	4	1	1
ESSO Motor Oil	1	—	1	4	1	1
ESSO Transmission Fluid (TYPE A)	1	—	2	4	1	1
ESSO XP90 EP Lubricant	1	—	2	4	1	1
Ethane	1	1	2	4	1	1
Ethanol (Ethyl Alcohol)	1	4	3	1	3	2
Ethanolamine	2	4	4	2	4	1
Ethyl Acetate	4	4	4	2	4	4
Ethyl Acetoacetate	4	4	4	2	4	4
Ethyl Acrylate	4	4	4	2	4	2
Ethyl Alcohol	1	4	3	1	3	1
Ethyl Benzene	4	4	4	4	1	2
Ethyl Benzoate	4	4	3	4	1	2
Ethyl Cellosolve	4	4	4	4	4	4
Ethyl Cellulose	2	4	3	3	4	1
Ethyl Chloride	1	4	4	4	1	1
Ethyl Chlorocarbonate	4	4	4	4	1	1
Ethyl Chloroformate	4	4	4	4	4	4
Ethyl Ether	3	4	4	4	4	4
Ethyl Formate	4	—	4	—	1	4
Ethyl Mercapton	4	—	4	3	2	1
Ethyl Oxalate	4	4	4	4	1	1
Ethyl Pentachlorobenzene	4	4	4	4	1	1
Ethyl Silicate	1	—	—	—	1	1
Ethylene	1	—	4	—	1	1
Ethylene Chloride	4	4	4	4	2	1
Ethylene Chlorohydrin	4	4	4	2	1	2
Ethylene Diamine	1	4	4	1	4	1
Ethylene Dichloride	4	4	4	4	1	1
Ethylene Glycol	1	3	1	1	1	1
Ethylene Oxide	4	4	4	4	4	4
Ethylene Trichloride	4	4	4	4	1	1
Fatty Acids	2	—	1	3	1	1
Ferric Chloride (aq)	1	1	2	2	1	1
Ferric Nitrate (aq)	1	1	2	3	1	1
Ferric Sulfate (aq)	1	1	2	2	1	1
Fish Oil	1	—	—	1	1	1
Fluorinated Cyclic Ethers	—	—	4	—	—	4
Fluorine (Liquid)	4	4		4	2	2
Fluorobenzene	4	4	4	4	1	1
Fluoroboric Acid	1	—	—	—	—	1
Fluorocarbon Oils	—	—	4	—	—	3

Elastomer	S	N	E	H	V	A
Fluorolube	1	—	4	1	2	2
Fluorosilicic Acid (Hydrofluosilicic Acid)	1	—	2	4	1	1
Formaldehyde (RT)	3	4	4	2	4	3
Formic Acid	2	—	2	2	3	2
Freon 11	2	—	3	4	1	4
Freon 12	1	1	3	4	2	4
Freon 13	1	—	3	4	1	4
Freon 21	4	—	3	4	4	4
Freon 22	4	2	4	4	4	4
Freon 31	4	—	3	—	4	4
Freon 32	1	—	3	—	4	4
Freon 112	3	—	3	4	1	4
Freon 113	1	—	3	4	2	4
Freon 114	1	—	3	4	2	4
Freon 115	1	—	3	—	1	4
Freon 134A	4	4	2	4	4	4
Freon 142b	1	—	3	—	4	4
Freon 152a	1	—	3	—	4	4
Freon 218	1	—	3	—	1	4
Freon C316	1	—	3	—	—	4
Freon C318	1	—	3	—	2	4
Freon 1381	1	—	3	4	1	4
Freon 114B2	2	—	3	4	2	4
Freon 502	2	—	3	—	2	4
Freon TF	1	—	3	4	2	4
Freon T-WD602	2	—	3	4	1	4
Freon TMC	2	—	3	3	1	4
Freon T-P35	1	—	3	1	1	4
Freon TA	1	—	3	3	3	4
Freon TC	1	—	3	4	1	4
Freon MF	1	—	3	4	2	4
Freon BF	2	—	3	4	1	4
Fuel Oil	1	1	1	4	1	1
Fumaric Acid	1	4	—	2	1	1
Furan, Furfuran	4	4	4	—	—	4
Furfural	4	4	4	4	4	4
Fyrquel (Cellulube)	4	4	—	1	1	1
Gallic Acid	2	4	4	—	1	1
Gasohol (10% Ethanol Ormethanol)	2	4	4	4	1	2
Gasoline (Lead And No-lead)	2	4	3	4	3	2
Gasoline	2	4	2	4	1	1
Gelatin	1	4	1	1	1	1
Glauber's Salt (aq)	4	4	1	—	1	1
Glucose	1	—	1	1	1	1
Glue	1	—	1	1	1	1
Glycerine	1	3	1	1	1	1
Glycols	1	4	1	1	1	1
Grease	1	2	2	1	1	1
Green Sulfate Liquor	2	2	1	1	1	1
Gulf High Temperature Grease	1	—	1	4	1	1
Halowax Oil	4	—	—	4	1	1
N-Hexaldehyde	4	—	2	2	4	3
Hexane	1	1	1	4	1	2
N-Hexene-1	2	1	1	4	1	1
Hexyl Alcohol	1	4	1	2	1	1
High Viscosity Lubricant, H2	1	—	1	1	1	1
High Viscosity Lubricant, U4	1	—	1	1	1	1
Hydrazine	2	—	—	3	4	3
Hydraulic Oil (Petroleum)	1	1	1	3	1	1
Hydrobromic Acid	4	4	2	4	1	1

SECTION 1-B TECHNICAL

Properties	S Nitrile	N Acrylates	E Vamac®	H Silicone	V Fluoroelastomers	A Aflas®

Ratings: 1 = Minor effect 2 = Moderate effect 3 = Static only 4 = Not Recommended — = insufficient data

Elastomer	S	N	E	H	V	A
Hydrobromic Acid 40%	4	4	4	4	1	1
Hydrochloric Acid (Cold) 37%	3	4	4	3	1	1
Hydrochloric Acid (Hot) 37%	4	4	4	4	2	1
Hydrocyanic Acid	2	4	—	3	1	1
Hydrofluoric Acid (Con.) Cold	4	4	4	4	1	1
Hydrofluoric Acid (Conc.) Hot	4	4	4	4	3	1
Hydrofluoric Acid — Anhydrous	4	4	4	4	4	1
Hydrofluosilicic Acid (Fluosilicic Acid)	1	—	—	4	1	1
Hydrogen Gas	1	2	1	3	1	1
Hydrogren Peroxide (90%)	4	4	4	2	2	1
Hydrogen Sulfide (Wet) Cold	4	4	4	3	4	1
Hydrogen Sulfide (Wet) Hot	4	4	4	3	4	1
Hydroquinone	3	4	—	—	2	2
Hyjet	4	—	4	—	4	3
Hyjet III	4	—	4	—	4	3
Hyjet S	4	—	4	—	4	3
Hyjet W	4	—	4	—	4	3
Hypochlorous Acid	4	4	4	—	1	1
Iodine Pentafluoride	4	4	4	4	4	—
Iodoform	—	—	—	—	—	—
Isobutyl Alcohol	2	4	1	1	1	1
Isooctane	1	1	1	4	1	2
Isophorone	4	4	4	4	4	4
Isopropyl Acetate	4	4	4	4	4	4
Isopropyl Alcohol	2	4	1	1	1	1
Isopropyl Chloride	4	4	4	4	1	1
Isopropyl Ether	2	3	4	4	4	4
Kerosene	1	1	3	4	1	1
Lacquers	4	4	4	4	4	3
Lacquer Solvents	4	4	4	4	4	4
Lactic Acid (Cold)	1	4	3	1	1	1
Lactic Acid (Hot)	4	4	3	2	1	1
Lard	1	1	1	2	1	1
Lavender Oil	2	2	2	4	1	1
Lead Acetate (aq)	2	4	4	4	4	4
Lead Nitrate (aq)	1	—	4	2	—	1
Lead Sulfamate (aq)	2	4	4	2	1	1
Legroin (Benzine) (Nitrobenzine) (Pet Ether)	1	1	4	4	1	2
Lime Bleach	1	4	4	2	1	1
Lime Sulfur	4	4	4	1	1	1
Lindol (Hydraulic Fluid)	4	4	4	3	2	1
Linoleic Acid	2	—	3	2	2	1
Linseed Oil	1	1	1	1	1	1
Liquified Petroleum Gas	1	3	1	3	1	1
Lubricating Oils (Petroleum)	1	1	1	4	1	1
Lye	2	4	4	2	2	1
Magnesium Chloride (aq)	1	—	1	1	1	1
Magnesium Hydroxide (aq)	2	4	1	—	1	1
Magnesium Sulfate (aq)	1	4	1	1	1	1
Maleic Acid	4	4	1	—	1	1
Maleic Anhydride	4	4	—	—	4	1
Malic Acid	1	4	3	2	1	1
Mek ((MMehtyl Ethyl Ketone)	4	4	4	4	4	4
Mercury Chloride (aq)	1	—	—	—	1	1
Mercury	1	—	1	—	1	1
Mesityl Oxide	4	4	—	4	4	—

Elastomer	S	N	E	H	V	A
Methane	1	1	1	4	2	1
Methanol (Methyl Alcohol)	1	4	1	1	4	2
Methyl Acetate	4	4	4	4	4	4
Methyl Acrylate	4	4	4	4	4	4
Methylacrylic Acid	4	4	4	4	4	1
Methyl Alcohol	1	2	1	1	4	1
Methyl Bromide	2	3	—	—	1	1
Methyl Butyl Ketone (Propyl Acetone)	4	4	4	3	4	4
Methyl Cellosolve	3	4	4	4	4	1
Methyl Chloride	4	4	4	4	2	1
Methyl Cyclopentane	4	4	4	4	2	1
Methylene Chloride	4	4	4	4	2	2
Methyl Ether (Dimethyl Ether) (Monomethyl Ether)	4	4	4	4	2	2
Methyl Ethyl Ketone	4	4	4	4	4	4
Methyl Formate	4	—	4	—	—	—
Methyl Isobutyl Ketone	4	4	4	4	4	4
Methyl Methacrylate	4	4	4	4	4	3
Methyl Oleate	4	—	—	—	2	1
Methyl Salicylate	4	—	—	—	—	1
Milk	1	4	1	1	1	1
Mineral Oil	1	1	1	2	1	1
Monochlorobenzene	4	4	4	4	1	2
Monomethyl Aniline	4	4	4	—	2	1
Monoethanol Amine	4	4	4	2	4	4
Monomethyl Ether (Methyl Ether) (Dimethyl Ether)	1	4	1	1	1	3
Monovinyl Acetylene	1	—	—	2	1	1
Mustard Gas	—	—	—	1	—	1
MIL-L-644 B	1	2	2	3	—	—
MIL-L-2104 B	1	1	1	3	1	1
MIL-L-2105 B	1	1	1	3	1	1
MIL-G-2108	1	1	1	3	1	1
MIL-S-3136 B Type 1	1	2	2	4	1	2
MIL-S-3136 B Type II	1	—	—	4	1	2
MIL-S-3136 B Type III	1	—	4	4	1	2
MIL-S-3136 B Type IV	1	1	1	3	1	2
MIL-S-3136 B Type V	1	1	1	3	1	2
MIL-S-3136 B Type VI	1	1	1	3	1	2
MIL-S-3136 B Type VII	1	—	—	4	1	2
MIL-L-3150 A	1	1	1	3	1	2
MIL-L-3503	1	1	1	3	1	2
MIL-L-3545 B	2	2	2	4	1	2
MIL-C-4339 C	1	1	1	3	1	2
MIL-G-4343 B	2	1	—	4	1	1
MIL-L-5020 A	1	2	2	4	1	2
MIL-J-5161 F	1	—	2	4	1	2
MIL-C-5545 A	2	2	—	4	1	2
MIL-H-5559 A	1	3	2	2	2	1
MIL-F-5566	1	—	2	1	1	1
MIL-F-5602	1	1	3	3	1	2
MIL-H-5606 B (Red Oil)	1	1	2	4	1	—
MIL-J-5624 G JP-3, JP-4, JP-5	1	2	3	4	1	2
MIL-O-6081 C	1	1	2	3	1	2
MIL-L-6082 C	1	1	2	3	1	2
MIL-H-6083 C	1	1	2	3	1	2
MIL-L-6085 A	1	3	4	3	1	2
MIL-L-6086 B	1	1	2	3	1	2
MIL-L-6387 A	1	—	—	3	1	2
MIL-C-6529 C	2	2	3	4	1	2
MIL-F-7024 A	1	2	3	4	1	2
MIL-H-7083 A	1	3	2	2	2	1

Properties	S Nitrile	N Acrylates	E Vamac®	H Silicone	V Fluoroelastomers	A Aflas®

Ratings: 1 = Minor effect 2 = Moderate effect 3 = Static only 4 = Not Recommended — = insufficient data

Elastomer	S	N	E	H	V	A
MIL-G-7118 A	1	3	4	3	1	2
MIL-G-7187	1	1	2	3	1	2
MIL-G-7421 A	1	—	—	3	1	2
MIL-H-7644	2	2	3	4	1	1
MIL-L-7645	2	2	3	4	1	2
MIL-G-7711 A	1	1	2	3	1	2
MIL-L-7808 F	1	3	4	3	1	2
MIL-L-7870 A	1	1	2	3	1	3
MIL-C-8188 C	1	3	3	3	1	3
MIL-A-8243 B	1	3	2	2	2	1
MIL-L-8383 B	1	1	2	3	1	2
MIL-H-8446 B (MLO-8515)	2	3	4	4	1	2
MIL-1-8660 B	1	—	—	4	1	1
MIL-L-9000 F	1	2	3	4	1	2
MIL-T-9188 B	4	4	4	4	4	2
MIL-L-9236 B	1	3	3	4	1	3
MIL-L-10295 A	1	1	2	3	1	2
MIL-L-10324 A	1	1	2	3	1	2
MIL-G-10924 B	1	1	1	3	1	2
MIL-L-11734 B	1	3	2	3	1	2
MIL-O-11773	1	3	3	3	1	2
MIL-P-12098	2	2	2	4	1	1
MIL-H-13862	1	1	1	3	1	2
MIL-H-13866 A	1	1	1	3	1	2
MIL-H-13910 B	2	2	2	4	1	1
MIL-H-13919 A	1	1	1	3	1	2
MIL-L-14107 B	3	—	1	4	1	2
MIL-L-15017	1	1	1	3	1	2
MIL-L-15018 B	1	1	1	3	1	2
MIL-L-15019 C	1	1	1	3	1	2
MIL-L-15719 A	2	2	2	4	1	1
MIL-G-15793	1	3	3	3	1	2
MIL-F-16929 A	1	3	4	3	1	2
MIL-L-16958 A	1	1	1	3	1	2
MIL-F-17111	1	1	1	3	1	2
MIL-L-17331 D	1	1	1	3	1	2
MIL-L-17353 A	1	—	—	3	1	2
MIL-L-17672 B	1	1	1	3	1	2
MIL-L-18486 A	1	1	1	3	1	2
MIL-G-18709A	1	1	1	3	1	2
MIL-H-19457 B	4	4	4	4	4	3
MIL-F-19605	1	—	—	4	1	2
MIL-L-19701	1	3	3	3	1	2
MIL-L-21260	1	1	1	3	1	2
MIL-S-21568 A	1	1	1	4	1	1
MIL-H-22072	1	3	2	2	2	2
MIL-L-22396	1	1	1	3	1	2
MIL-L-23699 A	1	3	2	3	1	2
MIL-G-23827 A	1	3	2	3	1	2
MIL-G-25013	1	2	2	4	1	2
MIL-F-25172	1	—	—	4	1	2
MIL-L-25336 B	1	3	3	3	1	2
MIL-F-25524 A	1	—	1	4	1	2
MIL-G-25537 A	1	1	1	3	1	2
MIL-F-25558 B (RJ-1)	1	1	1	3	1	1
MIL-F-25576 C(RP-1)	1	1	1	4	1	1
MIL-H-25598	1	1	1	3	1	2
MIL-F-25656 B	1	—	—	4	1	1
MIL-L-25681 C	1	2	2	4	1	1
MIL-G-25760 A	1	3	3	4	1	2
MIL-G-25968	1	3	3	3	1	2
MIL-L-26087 A	1	1	2	3	1	2
MIL-G-27343	1	—	—	4	1	1
MIL-H-27601 A	2	2	2	4	1	2
MIL-G-27617	4	—	—	4	1	1

Elastomer	S	N	E	H	V	A
MIL-I-27686 D	1	3	2	2	2	2
MIL-L-27694 A	1	—	—	4	1	1
MIL-L-46000 A	1	3	3	3	1	2
MIL-H-46001 A	1	1	1	3	1	2
MIL-L-46002	1	—	—	3	1	2
MIL-H-46004	1	1	1	3	1	2
MIL-P-46046 A	2	2	2	4	1	1
MIL-H-81019 B	1	1	1	3	1	2
MIL-S-81087	1	—	—	4	1	1
Naphtha	2	2	4	4	1	1
Naphthalene	4	—	4	4	1	1
Naphthalenic Acid	2	—	—	4	1	1
Natural Gas	1	2	4	1	1	1
Neats Foot Oil	1	1	4	2	1	1
Neville Acid	4	4	4	4	1	1
Nickel Acetate (aq)	2	4	4	4	4	4
Nickel Chloride (aq)	1	3	4	1	1	1
Nickel Sulfate (aq)	1	4	4	1	1	1
Niter Cake	1	4	4	1	1	1
Nitric Acid (Con.)	4	4	4	4	3	2
Nitric Acid (Dilute)	4	4	4	2	1	2
Nitric Acid — Red Fuming	4	4	4	4	4	2
Nitrobenzene	4	4	4	4	2	1
Nitrobenzene (Petroleum Ether)	1	1	4	4	1	1
Nitroethane	4	4	4	4	4	1
Nitrogen	1	1	1	1	1	1
Nitrogen Tetroxide	4	4	4	4	4	1
Nitromethane	4	4	4	4	4	1
O-A-548 a	1	3	2	2	2	—
O-T-634 b	3	4	4	4	1	—
Octachlorotoluene	4	4	4	4	1	2
Octadecane	1	2	2	4	1	1
N-octane	2	4	1	4	1	1
Octyl Alcohol	2	4	1	2	1	1
Oleic Acid	3	4	3	4	2	1
Oleum Spirits	2	—	4	4	1	2
Olive Oil	1	1	1	3	1	1
O-Dichlorobenzene	4	4	2	4	1	1
Oxalic Acid	2	—	1	2	1	1
Oxygen — Cold	2	2	4	1	1	1
Oxygen — (200-400°F)	4	4	4	2	2	1
Ozone	4	2	1	1	1	1
Paint Thinner, Duco	4	4	4	4	2	2
Palmitic Acid	1	2	—	4	1	1
Peanut Oil	1	1	1	1	1	1
Perchloric Acid	4	4	4	4	1	1
Perchloroethylene	2	4	4	4	1	1
Petroleum — Below 250°F	1	2	2	2	1	1
Petroleum — Above 250°F	4	4	2	4	2	1
Phenol (Carbolic Acid)	4	4	4	4	1	1
Phenylbenzene (Diphenyl) (Diphenyl)	4	4	4	4	1	1
Phenyl Ethyl Ether	4	4	4	4	4	3
Phenyl Hydrazine	4	4	4	—	1	1
Phorone (Diisopropylidene Acetone)	4	4	4	4	4	4
Phosphoric Acid — 20%	2	—	2	2	1	1
Phosphoric Acid — 45%	4	—	2	3	1	1
Phosphorus Trichloride	4	—	—	—	1	1

SECTION 1-B TECHNICAL

Properties	S Nitrile	N Acrylates	E Vamac®	H Silicone	V Fluoroelastomers	A Aflas®

Ratings: 1 = Minor effect 2 = Moderate effect 3 = Static only 4 = Not Recommended — = insufficient data

Elastomer	S	N	E	H	V	A
Pickling Solution	4	4	4	4	2	1
Picric Acid	2	—	4	4	1	1
Pinene	2	4	4	4	1	1
Pine Oil	4	—	2	3	1	1
Piperidine	4	4	4	4	4	—
Plating Solution — Chrome	—	—	—	4	1	1
Plating Solution — Others	1	—	—	4	1	1
Polyvinyl Acetate Emulsion	—	—	1	—	—	—
Potassium Acetate (aq)	2	4	4	4	4	4
Potassium Chloride (aq)	1	1	1	1	1	1
Potassium Cupro Cyanide (aq)	1	1	1	1	1	1
Potassium Cyanide (aq)	1	1	1	1	1	1
Potassium Dichromate (aq)	1	1	2	1	1	1
Potassium Hydroxide (aq)	2	4	4	3	4	1
Potassium Nitrate (aq)	1	1	1	1	1	1
Potassium Sulfate (aq)	1	4	—	1	1	1
Producer Gas	1	2	1	2	1	1
Propane	1	1	1	4	1	1
i-Propyl Acetate	4	4	4	4	4	4
n-Propyl Acetate	4	4	4	4	4	4
Propyl Acetone (Methyl Butyl Ketone)	4	4	4	3	4	4
Propyl Alcohol	1	4	1	1	1	1
Propyl Nitrate	4	4	4	4	4	1
Propylene	4	4	4	4	1	1
Propylene Oxide	4	4	4	4	4	4
Pydraul, 10E, 29 ELT	4	4	4	4	1	1
Pydraul, 30E, 50E, 65E, 90E	4	4	4	1	1	1
Pydraul, 115E	4	4	4	4	1	1
Pydraul, 230E, 312C, 540C	4	4	4	4	1	1
Pyranolo, Transformer Oil	1	1	4	4	1	1
Pyridine	4	4	4	4	4	1
Pyroligneous Acid	4	4	4	—	4	—
Pyrrole	4	4	4	2	4	3
P-S-661 b	1	—	—	4	1	—
P-D-680	1	—	—	4	1	—
Radiation	3	3	1	3	4	1
Rapeseed Oil	2	2	2	4	1	1
Red Oil (MIL-H-5606)	1	1	2	4	1	1
RJ-1 (MIL-F-25558 B)	1	1	2	4	1	1
RP-1 (MIL-F-25576 C)	1	1	2	4	1	1
SAE 30	1	1	1	1	1	1
SEA 90	1	1	1	4	1	1
SAE 90 EP(GL-5)	2	1	2	4	1	1
Sal Ammoniac	1	1	1	2	1	1
Salicylic Acid	2	—	1	—	1	1
Salt Water	1	4	1	1	1	1
Sewage	1	4	1	1	1	1
Shell Alvania Grease #2	1	—	1	2	1	1
Silicate Esters	2	—	4	4	1	1
Silicone Greases	1	1	1	3	1	1
Silicone Oils	1	1	1	3	1	1
Silver Nitrate	2	1	1	1	1	1
Skydrol 500	4	4	4	3	4	2
Skydrol 7000	4	4	4	3	2	2
Soap Solutions	1	4	1	1	1	1
Soda As	1	—	1	1	1	1
Sodium Acetate (aq)	2	4	4	4	4	4
Sodium Bicarbonate (aq) (Baking Soda)	1	—	1	1	1	1
Sodium Bisulfite (aq)	1	4	1	1	1	1
Sodium Borate (aq)	1	—	1	1	1	1
Sodium Chloride (aq)	1	—	1	1	1	1
Sodium Cyanide (aq)	1	—	1	1	1	1
Sodium Hydroxide (aq)	2	3	1	2	2	1
Sodium Hypochlorite (aq (Chlorox)	2	4	2	2	1	1
Sodium Metaphosphate (aq)	1	—	—	—	1	1
Sodium Nitrate (aq)	1	—	—	4	—	1
Sodium Perborate (aq)	2	—	2	2	1	1
Sodium Peroxide (aq)	2	4	3	4	1	1
Sodium Phosphate (aq)	1	1	2	4	1	1
Sodium Silicate (aq)	1	—	1	—	1	1
Sodium Sulfate (aq)	1	4	2	1	1	1
Sodium Thiosulfate (aq)	2	4	2	1	1	1
Soybean Oil	1	1	2	1	1	1
Stannic Chloride (aq)	1	—	2	2	1	1
Stannous Chloride (aq)	1	—	2	2	1	1
Steam Under 300°F	4	4	1	3	4	1
Steam Over 300°F	4	4	1	4	4	1
Stearic Acid	2	—	4	2	—	1
Stoddard Solvent	1	1	3	4	1	1
Styrene	4	4	4	4	2	2
Sucrose Solution	1	4	1	1	1	1
Sulfite Liquors	2	4	4	4	1	1
Sulfur	4	4	2	3	1	1
Sulfur Chloride (aq)	3	4	2	3	1	1
Sulfur Dioxide (Dry)	4	4	2	2	1	1
Sulfur Dioxide (Wet)	4	4	2	2	1	1
Sulfur Dioxide (Liquified) Under Pressure)	4	4	2	2	1	1
Sulfur Hexafluoride	2	4	4	2	1	1
Sulfur Trioxide	4	4	4	2	1	1
Sulfuric Acid (Dilute)	3	2	4	4	1	1
Sulfuric Acid (Conc.)	4	4	4	4	1	1
Sulfuric Acid (20% Oleum)	4	4	4	4	1	1
Sulfurous Acid	2	4	4	4	1	1
Sunoco All Purpose Grease	1	—	1	4	1	1
Sunoco SAE 10	1	—	2	4	1	1
Tannic Acid	1	4	2	2	1	1
Tar, Bituminous	2	4	4	2	1	1
Tartaric Acid	1	—	2	1	1	1
Terpineol	2	—	—	—	1	1
Tertiary Butyl Alcohol	2	4	3	2	1	1
Tertiary Butyl Catechol	4	4	4	—	1	—
Tertiary Butyl Mercaptan	4	4	4	4	1	1
Tetrabromoethane	4	4	4	4	1	1
Tetrabromomethane	4	—	4	4	1	1
Tetrabutyl Titanate	2	—	—	—	1	1
Tetrochloroethylene	4	4	4	4	1	1
Tetraethyl Lead	2	—	3	—	1	1
Tetrahydrofuran	4	4	4	4	4	4
Tetralin	4	—	—	4	1	1
Thionyl Chloride	4	4	4	—	2	1
Titanium Tetrachloride	2	4	4	4	1	1
Toluene	4	4	4	4	1	4
Toluene Diiscocyanate	4	4	4	4	4	4
Transformer Oil	1	2	1	2	1	1
Transmission Fluid Type A	1	1	1	2	1	1
Triacetin	2	4	4	—	4	2
Triaryl Phosphate	4	4	4	3	1	1
Tributoxy Ethyl Phosphate	4	4	4	—	1	1
Tributyl Mercaptan	4	4	4	4	1	1
Tributyl Phosphate	4	4	4	4	4	1

SECTION 1-B TECHNICAL

Properties	S Nitrile	N Acrylates	E Vamac®	H Silicone	V Fluoroelastomers	A Aflas®

Ratings: 1 = Minor effect 2 = Moderate effect 3 = Static only 4 = Not Recommended — = insufficient data

Elastomer	S	N	E	H	V	A
Trichloroacetic Acid	2	4	4	—	3	2
Trichloroethane	4	4	4	4	1	1
Trichloroethylene	4	4	4	4	1	4
Tricresyl Phosphate	4	4	2	3	1	1
Triethonol Amine	2	4	1	—	4	1
Triethyl Aluminum	4	4	4	—	2	1
Triethyl Borane	4	4	4	—	1	1
Trinitrotoluene	4	4	4	—	2	2
Trioctyl Phosphate	4	4	2	3	2	1
Tung Oil (China Wood Oil)	1	—	2	4	1	1
Turbine Oil	2	1	2	4	1	1
Turbo Oil #35	1	—	2	4	1	1
Turpentine	1	2	4	4	1	1
Type I Fuel (MIL-S-3136)	1	—	1	4	1	1
Type II Fuel (MIL-L-3136)	2	—	2	4	1	1
Type III Fuel (MIL-L-3136)	2	—	4	4	1	1
TT-N 95 a	1	—	—	4	1	2
TT-N-97 B	1	3	3	4	1	2
TT-I-735 b	1	—	—	1	1	1
TT-S-735 Type I	1	2	2	4	1	2
TT-S-735 Type II	1	—	—	4	1	2
TT-S-735 Type III	1	—	—	4	1	2
TT-S-735 Type IV	1	1	2	3	1	2
TT-S-735 Type V	1	1	1	3	1	2
TT-S-735 Type VI	1	1	1	3	1	2
TT-S-735 Type VII	1	—	—	4	1	2
TT-T656b	4	4	4	4	4	3
Unsymmetrical Dimethyl Hydrazine (UDMH)	2	—	—	4	4	—

Elastomer	S	N	E	H	V	A
Varnish	2	4	1	4	1	1
Vegetable Oils	1	1	1	2	1	1
Versilube F-50	1	1	2	3	1	1
Vinegar	2	4	2	1	1	2
Vinyl Chloride	4	4	4	—	1	1
VV-B-680	2	2	2	4	1	1
VV-G-632	1	1	2	3	1	2
VV-G-671c	1	1	2	3	1	2
VV-H-910	2	2	2	4	1	1
VV-I-530a	1	1	2	3	1	2
VV-K-211d	1	—	—	4	1	2
VV-K-220a	1	2	2	4	1	2
VV-L-751b	2	2	2	4	1	2
VV-L-800	1	1	1	3	1	2
VV-L-820b	1	1	1	3	1	2
VV-L-825a Type I	1	1	1	3	1	2
VV-L-825a Type II	1	1	1	3	1	2
VV-L-825a Type III	2	2	3	4	1	2
VV-O-526	1	1	2	3	1	2
VV-P-216a	1	1	2	3	1	2
VV-P-236	2	2	3	4	1	2
Wagner 21 Brake Fluid	3	—	4	3	4	1
Water	1	4	1	1	1	1
Whiskey, Wines	1	4	1	1	1	1
White Pine Oil	2	—	—	4	1	1
White Oil	1	1	1	4	1	1
Wood Oil	1	1	1	4	1	1
Xylene	4	4	4	4	1	3
Xylidine (Di-methyl Aniline)	3	4	4	4	4	2
51-F-23	1	1	1	3	1	1

Sealing System Preparation And Seal Installation

STORAGE AND HANDLING OF OIL SEALS

Introduction

Careful storage and handling of radial lip type seals is necessary to avoid hazards prior to installation which would adversely affect service life.

General Storage

Radial lip type seals are very robust long lived components. However, as with any precision components they should be stored with care as the service life of bearings and/or other costly machined parts may depend upon how well the seal performs. Hazards which may be encountered include: temperature, ozone, humidity, radioactive materials, fumes, dust, grit and mechanical damage.

The storage area should be cool (60° to 90°F) and with average (40 to 70%) humidity. Seals should be stored on a first in - first out basis, since even under ideal conditions, an unusually long shelf life may cause deterioration of element materials. Excessive heat and/or exposure to ozone can cause premature aging of some types of sealing elements thus reducing service life. Avoid storage near sources of heat. To prevent ozone aging, keep away from direct or reflected sunlight and electrical equipment that may generate ozone. Excessive humidity will deteriorate some seal element materials as well as cause corrosive damage to metal cases and springs.

Oil seals should be stored in a place other than a work area to avoid possible mechanical damage by equipment or falling objects. A closed container will provide protection from mechanical damage, as well as dust, grit and other contaminants.

Mechanical Damage

Many oil seal failures can be traced to improper handling or storage of the seal. To avoid damage:

- Keep in the box in which they were originally packed. Never store seals unprotected in open bins.
- Never hang seals on a hook.
- Never tag seals.
- Keep seals clean.
- Avoid dropping seals. This may dislodge the spring, distort or contaminate the seal.
- Never use old or damaged seals.

Lip Compound Age Resistance (Shelf Life)

Resistance to deterioration in storage varies between elastomers. Proper storage under conditions which minimize aging effect is extremely important. The chart below presumes proper storage conditions and reflects general usage applications.

Type of Lip Material	Shelf Life
Urethane	3 to 5 years
Nitrile	5 to 10 years
AFLAS®, Fluoroelastomer, Silicone,	Up to 20 years
Polyacrylate, VAMAC®	Up to 20 years
Felt, Leather, PTFE	Indefinite

Sealing System Preparation And Seal Installation

SHAFT REQUIREMENTS

Proper engineering of the components of the assembly is necessary for seal reliability. Shaft requirements have been determined by the Rubber Manufacturer's Association, through thousands of hours of testing. The following items should be considered at the original equipment design stage or whenever anexisting application is to be upgraded.

Shaft Finish — Shaft finish, a prime factor in proper functioning of a lip seal, should be specified as 10-25 microinches Ra (0.20-0.60 micrometers Ra) with no machine lead.

Shaft Lead — Maximum permissible lead angle is 0 ± 0.05°. The most acceptable method for obtaining this surface characteristic is plunge grinding.

Shaft Diameter — Shaft diameter tolerances are shown below. Tolerances greater than those shown should be used only if agreed upon between user and supplier.

Shaft Diameter (inches)	Tolerances	Shaft Diameter (mm)	Tolerances
To and including 4.000	± .003	To and including 100	± 0.08
4.001 through 6.000	± .004	100.01 through 150	±0.10
6.001 through 10.000	± .005	150.01 through 250	± 0.13
10.001 and larger	± .006	250.01 and larger	± 0.15

Shaft Hardness — Radial lip type seals will function satisfactorily on mild steel, cast iron or malleable iron shafts. Under normal conditions, however, the section of the shaft contacted by the sealing lip should be hardened to Rockwell C30 minimum. If, however, the shaft may be nicked or damaged during handling or assembly, a Rockwell C45 minimum is recommended.

Shaft Chamfer — To aid installation and help prevent damage to the seal lip, the leading edge of the shaft should have a chamfer or radius which must be smooth and free of nicks or rough spots.

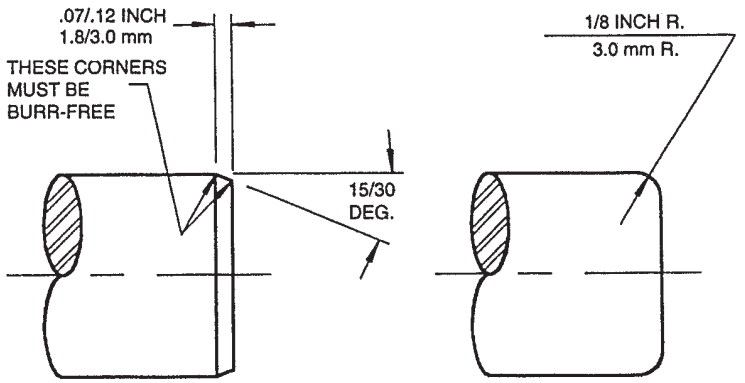

Shaft-to-Bore Misalignment (STBM) — The distance the center of rotation is displaced from the center of the bore. It usually exists to some degree due to normal machining and assembly tolerances. Misalignment results in uneven wear and, if excessive, will shorten seal life. To measure, attach a dial indicator to the shaft and indicate off the seal bore while rotating the shaft. For specific limitations see the National Oil Seal Design Type and Description charts on page 6 & 7.

Dynamic Runout — Twice the distance the center of the shaft is displaced from the center of rotation. It can result from a bent shaft, lack of shaft balance or other manufacturing variables. To measure, find the total movement of an indicator held against the seal area of the slowly rotating shaft. For specific limitations see the National Oil Seal Design Type and Description charts on page 6 & 7.

Shaft Material — Steel, stainless steel and certain cast irons all provide good sealing surfaces if finished properly. Brass or bronze shafts are not recommended nor are alloys of aluminum, zinc, magnesium and other similar elements. If plating is considered, it should be hard nonporous chrome plate. Flaking or plating exposes razor edges which may cut the seal lip.

Sealing System Preparation And Seal Installation

BORE REQUIREMENTS

Maintaining proper bore characteristics is important if the integrity of the sealing system is to remain intact. To provide proper fit of National Oil Seals, the dimensions relative to Bore Tolerance and seal Press Fit should be followed.

Bore Tolerances and Seal Press Fit

The Table below indicates recommended Bore Tolerances and seal Press Fit for both Metal and Rubber O.D. seals.

Bore Diameter	Bore Tolerance	Nominal Press Fit Metal O.D.	Metal O.D. Tolerance	Nominal Press Fit Rubber O.D.	Rubber O.D. Tolerance
Up to 2.000	± 0.001	0.005	± 0.002	0.008	± 0.003
2.000 to 3.000	± 0.001	0.005	+0.003 / -0.002	0.010	± 0.003
3.001 to 4.000	± 0.0015	0.006	± 0.003	0.011	± 0.003
4.001 to 5.000	± 0.0015	0.006	± 0.003	0.011	± 0.003
5.001 to 7.000	± 0.0015	0.007	± 0.003	0.012	± 0.004
7.001 to 12.000	± 0.002	0.008	+0.004 / -0.003	0.013	± 0.004
12.001 to 20.000	± 0.003	0.012	± 0.005	0.015	± 0.005
20.001 to 40.000	± 0.004	0.013	± 0.005	0.018	± 0.006
40.001 to 60.000	± 0.006	0.016	± 0.006	0.020	± 0.007

Bore Material

Ferrous materials are commonly used for bore housings. The table above applies to these types of materials. However, if other materials are used (i.e., aluminum or composites) higher rates of thermal expansion are usually involved and should be considered.

Bore Finish

A finish of 125 microinches Ra (3.2 micrometers Ra) or smoother should be maintained to assure a leak free emvironment. If the bore is rougher than 125 microinches Ra (3.2 micrometers Ra) National Oil Seal offers an environmentally friendly waterbase resinous coating on all of the O.D.'s of the metal cases. This coating process or material is termed Redicoat .

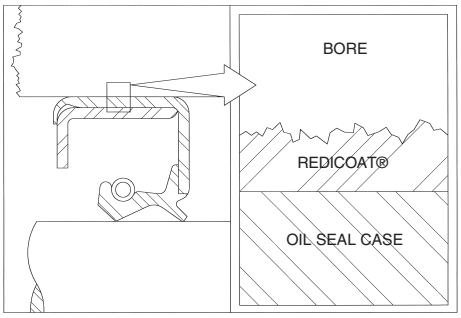

Bore Configuration

The lead corner of the seal bore should be chamfered for ease of seal installation. Rough corners or burrs can scratch the seals outside diameter and cause potential leak paths.

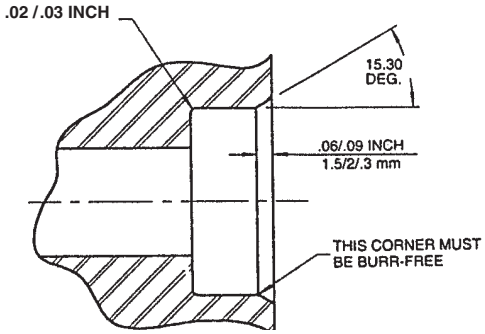

REDICOAT IS A REGISTERED TRADEMARK OF FEDERAL-MOGUL CORP.

Sealing System Preparation And Seal Installation

INSTALLATION OF SEALS, PROCEDURES, GUIDELINES AND TOOLS

Oil Seal Installation Procedure

1) Inspect the bore. Insure that it is clean and free of burrs that might distort the seal or cut the O.D., that may cause leakage. Check for roundness and make sure the leading edge is either rounded or chamfered.

2) Inspect the shaft. Look for machining lead, burrs, dirt and paint that might damage the seal or provide a leak path. If the old seal has worn a groove into the shaft, it needs to be repaired. In many cases, National Redi-Sleeves will enable you to quickly and inexpensively repair this condition. For more information, regarding National Redi-Sleeves see page 23 & 24.

3) Inspect the Shaft End. Remove all burrs and sharp edges. The shaft should be chamfered or radiused to assure the seal is not damaged during installation. If this is not possible, then an installation sleeve should be used.

4) Inspect Splines and Keyways. If the shaft has splines or keyways, cover with a sleeve, shim stock or tape to protect the seal lip.

5) Inspect the Seal. Check the seal for any damage (nicks, cuts, scratches or distortion of the sealing lip) that may have been caused during shipping. A damaged seal should be replaced.

6) Assure Proper Seal Direction. The sealing lip usually faces toward the medium to be sealed.

7) Prelube the Seal. Prior to installation, the sealing lip should be prelubed with the lubricant to be sealed. It is not necessary for the O.D. of metal parts to be lubed, however, a light film of oil should be applied to the O.D. of rubber coated seals to aid in the installation process and reduce sheer stress during installation. This prelube should reduce or eliminate the possibility of a rubber O.D. seal from backing out of the bore immediately after installation.

8) Installation Tools. Select an installation tool (see Fig below). For easy, accurate installation of National's popular standard style oil and grease seals use the RD-2000 which can easily install seals up to 3.375" (85.7 mm) O.D. The best tool will have a diameter slightly smaller than that of the housing bore and will apply force only on the seal case. Bearing races may be used as an installation tool adapter when "approved tools are not available.

9) Never Hammer Directly On the Seal. Screwdrivers, drift pins or punches should not be used as installation tools. Steel hammers are not recommended for use with approved installation tools; the shock of steel on steel can dislodge the garter spring. After the seal has engaged the bore, the seal should be driven in evenly with only enough force to seat it in the bore.

Recommended Installation Tools

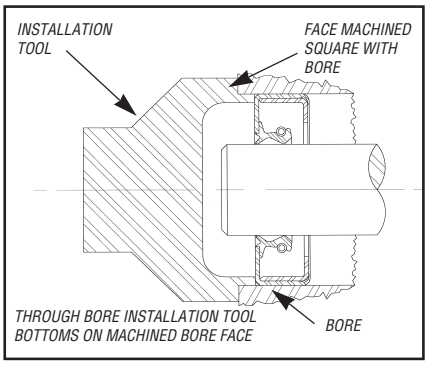

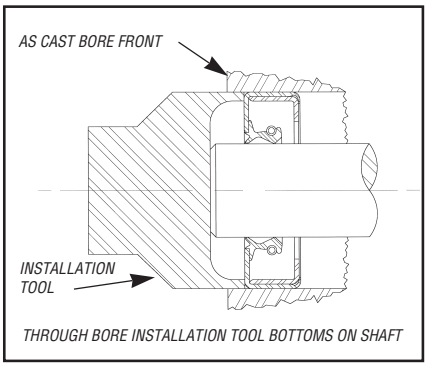

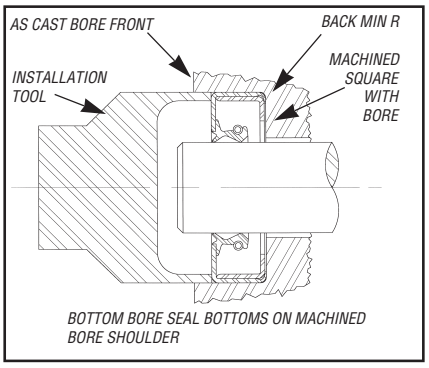

GENERAL INFORMATION

OIL SEAL DISTRESS ANALYSIS, TROUBLE SHOOTING CHECKLIST

The following chart is intended to assist in the evaluation of oil seal distress. It is not intended to be complete and should not be interpreted as inclusive of all distress causes. Questions or requests for additional information relative to oil seal distress should be directed to your Timken Representative.

Symptom	Probable Cause of Leak
Sealing Lip Surface Hardened	Can be caused by excessive operating temperatures, by inadequate lubrication or by incompatibility with sealed fluid.
Sealing Lip Brittle or Cracked	Operating temperatures of lubricant may exceed recommended limits for the type of sealing member material. Make sure seal is proper size. Too tight a fit on shaft will cause overheating. Check adequacy of lubricant for the type seal used.
Sealing Lip Shows Excessive Wear (around entire circumference)	Shaft finish may be too rough at point of lip contact. Seal not properly prelubricated before installation. Check adequacy of lubrication for the type seal used. Make sure seal is proper size. Too tight a fit on the shaft can cause overheating and rapid wear. Shaft run-out or shaft whip may exceed recommended limits. See that the seal seats close to the bearing and check for excessive looseness in bearing or splines.
Sealing Lip Worn On One Side	Usually due to misalignment of shaft to bore. This causes rapid wear at one point on the sealing lip.
Sealing Lip Contact On Shaft Too Light	Make sure seal is proper size. Check shaft for excessive wear at point of contact. Shaft may be too soft . . . check minimum hardness specifications for the existing operating conditions. Check the installation tools used. Mounting cones and sleeves must not have O.D. of more than 1/32" greater than the shaft . . . or the sealing lip may be overstretched.
Sealing Lip Nicked or Scratched	Careless storage, handling or use of improper assembly tools. Failure to clean and prepare shaft. Failure to protect sealing member when installing over splines, keyways, etc.
Sealing Lip "Blown-Out" (direction of lip contact reversed)	Look for excessive pressure build-up or plugged-up vents. Vents should be masked during painting to prevent clogging. Make sure the lubricant level is correct. Heating of the lubricant causes expansion and the pressure can blow out the seal.
Sealing Lip Surface Softened	Spongy lip is result of incompatibility between fluid and sealing element.
Seal Case Distorted	O.D. of seal may be too large for housing bore. Bore diameter should not vary from that recommended for the size of the seal. Housing bore may be excessively out-of-round. If bore diameter and out-of-round limits are correct . . . look for evidence of careless handling or use of improper installation tools.

Symptom	Probable Cause of Leak
Seal Garter Spring Damaged	May be caused by careless handling or use of improper installation tools or methods. Excessive spreading of the sealing lip during installation can damage the spring.
Inner Parts of Seal Assembly Loose	Improper installation tools used. Check out-of-round limits of housing bore and make sure seal O.D. is not too large for bore. Either condition can cause seal distortion which, although not readily apparent, may be enough to loosen the inner parts of the seal and cause leakage.
Seal Cocked In Housing	Usually due to improper tools or installation methods. Make sure seal O.D. is not too large for bore. Check bore for burrs, scale or chips that prevent the seal from properly seating.
Excessive Shaft Wear	Check for presence of abrasive dirt and grit. Shaft may not have been properly cleaned before installation or exterior dirt and dust conditions may be too severe for the type of seal used. Shaft may be too soft. Shaft hardness limits are dictated by the severity of exterior dirt conditions, the amount of lubrication and surface speeds. Make sure seal is proper size. Too tight a fit on the shaft will cause excessive wear on both lip and shaft. Check for insufficient lubrication at the seal.
Shaft Scratched or Gouged	Proper installation procedure call for careful inspection and preparation of the shaft prior to installation of the seal. Shaft must be thoroughly cleaned before installing the seal. Paint, shellac or cement on the surface where the lip contacts the shaft prevents proper sealing.
Spiral Machine Grooves on Shaft	Shafts should be polished at point of sealing lip contact or reground so spiral marks direct the fluid inward rather than outward under the sealing lip.
Leakage Around the O.D. of the Seal	Check housing bore for out of-roundness. If eccentricity is only slight (.001"), the use of special cement on the O.D. surface of seal may offset the condition. Check O.D. surface of seal for evidence of damage due to careless handling or improper installation. Seal may be cocked in housing. Check interior of bore for excessive roughness, dirt, scratches or burrs.
Excessive Prelubrication	This is not actually leakage, although it may look like it. When too much prelubricant is used, the excess melts and runs out. Check this possibility before removing a seal that has the appearance of leaking.

GENERAL INFORMATION

REDI-SLEEVES INSTALLATION AND REMOVAL

Redi-Sleeves Installation

Each Redi-Sleeve comes with its own installation tool and removable installation flange. The installation tool reduces the possibility of sleeve distortion and provides for sleeve installation without removal of the shaft from the serviced equipment.

1) Minimum shaft surface preparation is required. Clean the old seal surface thoroughly and file down burrs and rough areas.

2) Determine sleeve position necessary to cover the seal wear tracks. Measure to a convenient point or mark directly on the shaft.

3) Redi-Sleeves may be installed to any depth. The column labelled “Installation Depth” in the *Redi-Sleeve Size Listing* indicates the maximum distance from the end of the shaft the sleeve can be installed using the supplied installation tool. Check whether the supplied tool will reach this position. If not, a tool can be fabricated using tubing or pipe to make deeper installations. If this is required, make sure the ends are cut square and are deburred.

4) Fill any deep scores or gouges on the shaft with a thread repair compound. Make sure to install the sleeve prior to the filler hardening.

5) Drop the Redi-Sleeve into the installation tool so that only the flange projects. Note that the flanged end of the sleeve goes on the shaft first.

6) Gently pound the center of the installation tool with a wood block or large soft face mallet until the sleeve reaches the previously measured point on the shaft. The wood block or large soft face mallet reduces the possibility of distorting the installation tool.

7) If clearance is required after installation, the Redi-Sleeve flange can be removed. Prior to installation, use side-cutters to cut through the flange to the pre-cut line. After the sleeve is installed, pry flange away from the seal surface. The flange will peel away along the pre-cut line.

Redi-Sleeve Removal

Suggested methods of sleeve removal:

1) Application of heat will cause the sleeve to expand and permit removal.

2) Wire cutters may be used to “tear” the sleeve from the shaft using a twisting motion.

3) With the flange removed, tapping the sleeve with a hammer may cause stretching on the sleeve and allow for removal.

GENERAL INFORMATION

NATIONAL WEAR SLEEVES DESCRIPTION, INSTALLATION & REMOVAL

National Wear Sleeves

National wear sleeves are precision components that press fit onto a shaft, actually becoming part of the shaft. The outside diameter is ground to provide a surface finish of 10-25 microinches Ra (.25-.64 Micrometers Ra). A radius of the I.D. of the sleeve facilitates installation on to the shaft. National wear sleeves are designed to be installed at ambient temperatures, heating of the wear sleeve is not required for proper installation. The opposite end of the wear sleeve is also radiused on the O.D. to minimize the potential for damaging the seal during assembly.

Wear sleeves offer cost reduction opportunities to original equipment manufacturers who must now machine large or complex shafts or spindles to tight dimensional and finish tolerances in order to provide an adequate running surface for the seals. While transporting or moving the shaft from place to place, extreme care must be taken to prevent damage to a finished shaft. When wear sleeves are used, scratching or scoring of the shaft is eliminated since the seal will run on the precision-finished sleeve, installed when the seal and/or hub is installed.

Installation

1) Remove all dirt and oil from the sealing surface.
2) Coat shaft surface with a liquid sealant or gasket cement.
3) Press wear sleeve into position with an installation tool or use a flat plate against the sleeve. Do not hammer on the thin edge of the sleeve or the wear sleeve may become warped or out of round.
4) Remove excess sealant from the wear sleeve edges. No sealant should be left on the finished sleeve surface or seal leakage may result.

Removal

Suggested methods of wear sleeve removal:

1) Application of heat will cause the sleeve to expand and permit removal.
2) Tapping the sleeve with a hammer may cause stretching of the sleeve and allow for removal.
3) Careful use of a rounded, blunt chisel may remove the sleeve.
   Caution. It is not nesessary to cut the sleeve completely prior to removal.

Shaft Tolerances For National Wear Sleeves

Up to 3.000” ± .001”
3.001” to 6.000” ± .0015”

Shaft Finish

Prime shaft finishes of 125 RMS or better may require very little cement under the sleeve. With shaft finishes of over 125 RMS, complete inside penetration of the cement is recommended.

Prefix Explanation

J = Ground 10-25 RMS
JV = Unground phosphate coated

GENERAL INFORMATION

V-SEALS DESCRIPTION, MATERIAL, STYLES & DIMENSIONAL REFERENCE

Description

The V-Seal is a simple and versatile elastomeric "face" type seal produced in Nitrile or Viton. It can be the primary sealing element in an application or it can be a contaminant excluder or back-up seal. The seal mounts on, and typically rotates with the shaft while the lip lightly contacts the counterface. The elasticity of the V-Seal design eases installation, permits a broader range of shaft sizes and allows use on eccentric and misaligned shafts.

Material Data

	Nitrile	Fluoroelastomer
Temp. Range:	-40° to 225°F	-30° to 325°F
Max. Shaft Speed (FPM):	2,400	1,300
Color:	Black	Brown

Styles

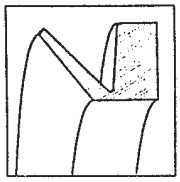

VRS1 The standard design of the industry covers a shaft range of 0.11" to 79.53" (3 mm to 2000 mm).

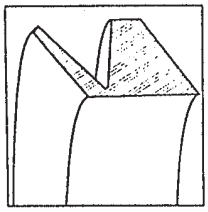

VRS2 The original style V-Seal offers a slightly more robust body when needed. Shaft coverage is from 0.18" to 8.27" (5 mm to 199 mm).

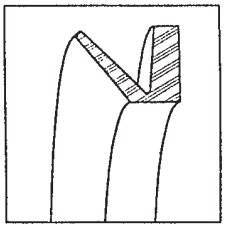

VRS 3 With its narrow body style, this V-Seal works on shafts from 5.32" to 18.70" (140 mm to 450 mm).

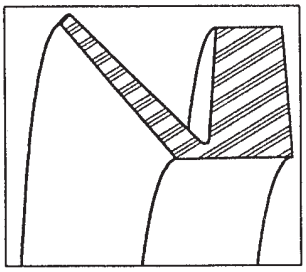

VRS4 This heavy-duty V-Seal with its special design covers a shaft range of 17.72" to 79.12" (450 mm to 2000 mm).

Dimensional Reference

VRS1, VRS3, and VRS4

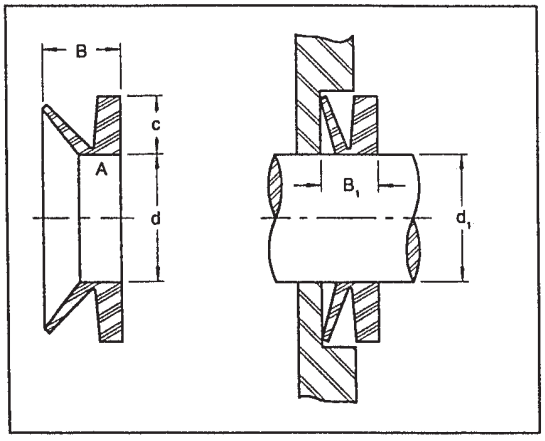

Profile dimensions Assembly dimensions

VRS2

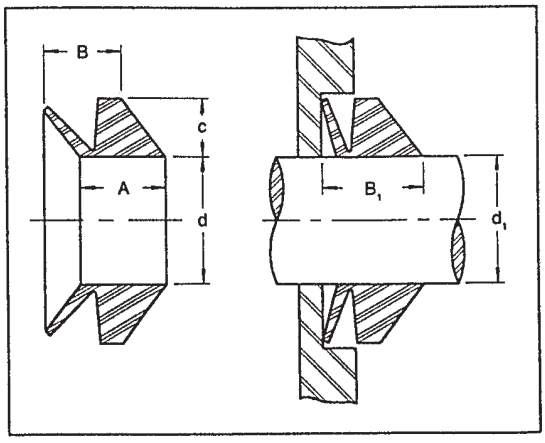

Profile dimensions Assembly dimensions

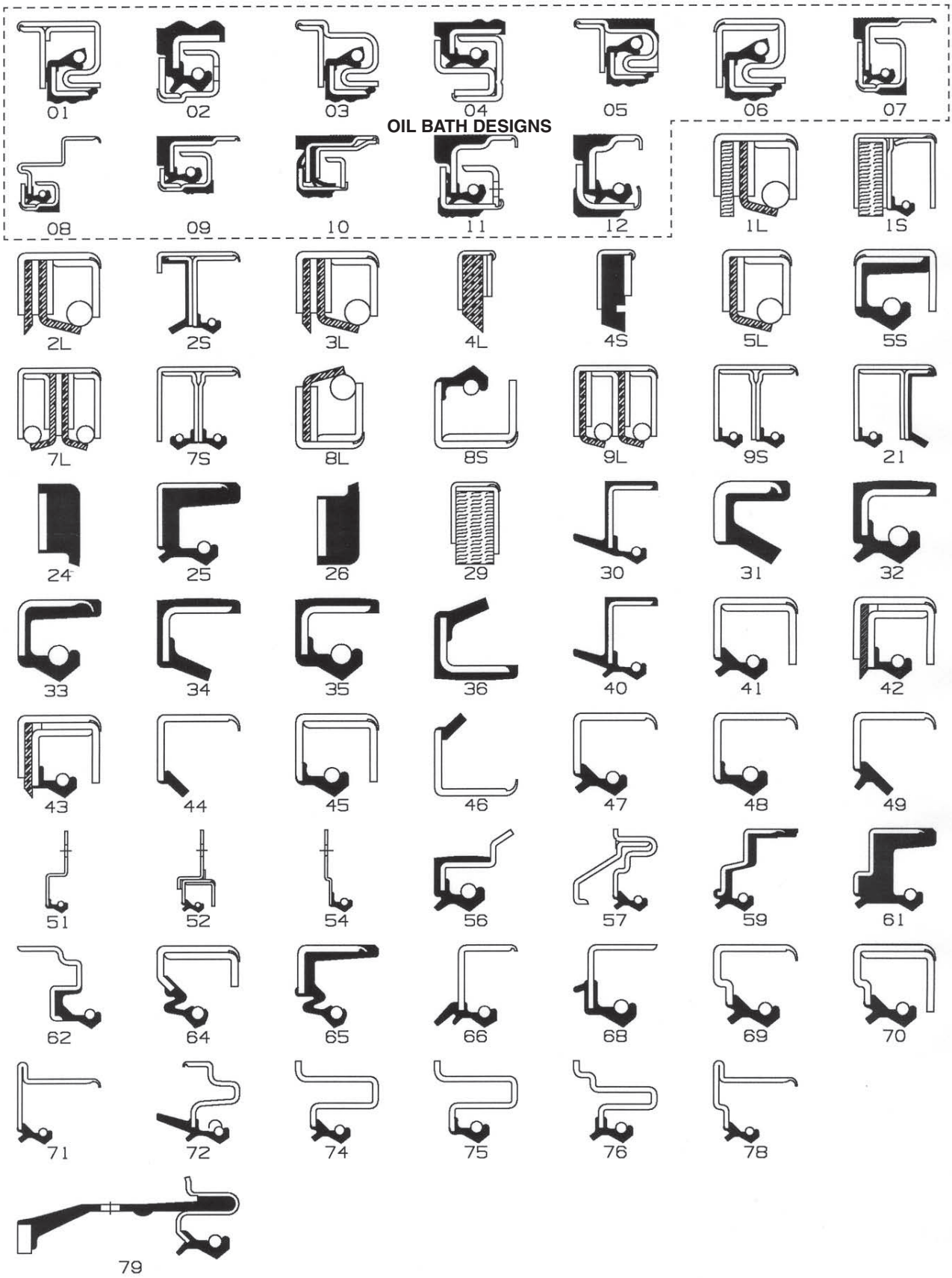
01
02
03
04
05
06
07
OIL BATH DESIGNS
08
09
10
11
12
1L
1S
2L
2S
3L
4L
4S
5L
5S
7L
7S
8L
8S
9L
9S
21
24
25
26
29
30
31
32
33
34
35
36
40
41
42
43
44
45
46
47
48
49
51
52
54
56
57
59
61
62
64
65
66
68
69
70
71
72
74
75
76
78
79

OIL SEAL DESIGN TYPES

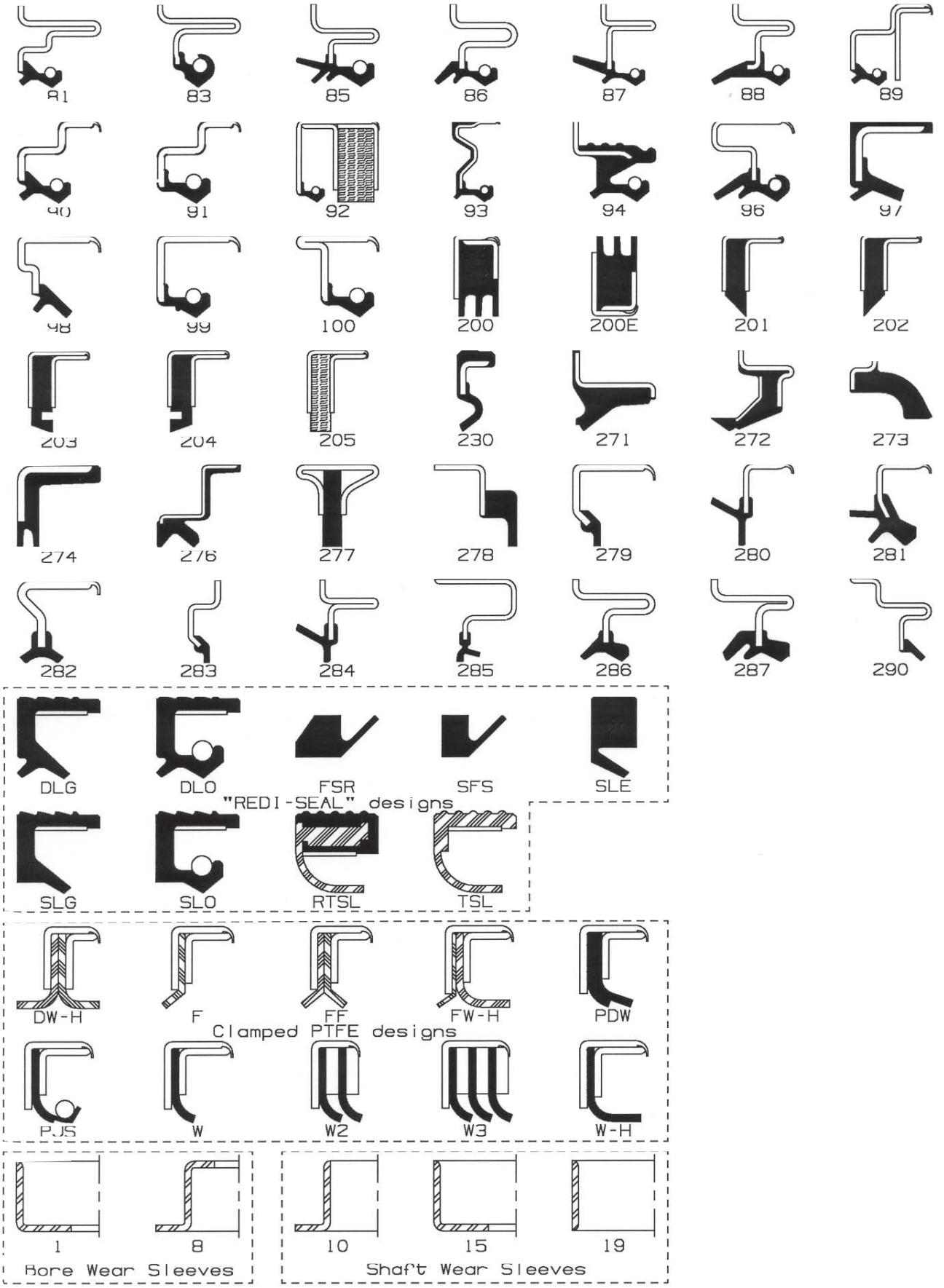

Hsg. Bore	Seal O.D.	Seal Width	Lip Mat'l	Part No.	Type/ Illus.
.156" (5/32") SHAFT					
.500	.504	.187	S	340872	34
4,50mm (.177") SHAFT					
15,80	*16,00*	*5,00*	*S*	*4.5X16X5★	32
.622	.630	.197			
15,80	*16,00*	*7,00*	*S*	*4.5X16X7★	32
.622	.630	.276			
16,80	*17,00*	*7,00*	*S*	*4.5X17X7★	32
.661	.669	.276			
4,80mm (.189") SHAFT					
14,80	*15,00*	*5,00*	*S*	*4.8X15X5★	32
.583	.591	.197			
5,00mm (.197") SHAFT					
14,80	*15,00*	*6,00*	*S*	*5X15X6★	32
.583	.591	.236			
15,80	*16,00*	*6,00*	*S*	*5X16X6★	32
.622	.630	.236			
16,00	*16,20*	*5,00*	*S*	*5X16X5★	32
.630	.638	.197			
16,80	*17,00*	*7,00*	*S*	*5X17X7★	32
.661	.669	.276			
17,80	*18,00*	*6,00*	*S*	*5X18X6★	32
.701	.709	.236			
17,80	*18,00*	*7,00*	*S*	*5X18X7★	32
.701	.709	.276			
17,80	*18,00*	*10,00*	*S*	*5X18X10★	32
.701	.709	.394			
18,80	*19,00*	*7,00*	*S*	*5X19X7★	32
.740	.748	.276			
21,80	*22,00*	*7,00*	*S*	*5X22X7★	32
.858	.866	.276			
5,50mm (.217") SHAFT					
17,80	*18,00*	*8,00*	*S*	*5.5X18X8★	32
.701	.709	.315			
21,80	*22,00*	*8,00*	*S*	*5.5X22X8★	32
.858	.866	.315			
6,00mm (.236") SHAFT					
16,00	*16,20*	*5,00*	*S*	6X16X5★	35
.630	.638	.197			
16,00	*16,20*	*7,00*	*V*	*6X16X7V★	35
.630	.638	.276			
16,00	*16,28*	*7,00*	*S*	6X16X7★	35
.630	.641	.276			
16,80	*17,00*	*7,00*	*S*	*6X17X7★	32
.661	.669	.276			
17,80	*18,00*	*6,00*	*S*	*6X18X6★	32
.701	.709	.236			
17,80	*18,00*	*7,00*	*S*	*6X18X7★	32
.701	.709	.276			
18,80	*19,00*	*7,00*	*S*	*6X19X7★	32
.740	.748	.276			
19,80	*20,00*	*5,50*	*S*	*6X20X5.5★	32
.779	.787	.217			
20,80	*21,00*	*7,00*	*S*	*6X21X7★	32
.819	.827	.276			
22,00	*22,28*	*7,00*	*S*	6X22X7★	35
.866	.877	.276			
25,80	*26,00*	*7,00*	*S*	*6X26X7★	32
1.016	1.024	.276			
34,80	*35,00*	*7,00*	*S*	*6X35X7★	32
1.370	1.378	.276			

Hsg. Bore	Seal O.D.	Seal Width	Lip Mat'l	Part No.	Type/ Illus.
.250" (1/4") SHAFT					
.499	.505	.187	S	343104	34
.750	**.758**	**.250**	**S**	**350435**	**35**
.750	.760	.175	S	240435	24
6,50mm (.256") SHAFT					
14,30	*14,50*	*7,00*	*S*	*6.5X14.5X7★	32
.563	.571	.276			
6,80mm (.268") SHAFT					
21,80	*22,00*	*7,00*	*S*	*6.8X22X7★	32
.858	.866	.276			
7,00mm (.276") SHAFT					
16,00	*16,20*	*7,00*	*V*	*7X16X7V★	35
.630	.638	.276			
16,00	*16,28*	*7,00*	*S*	7X16X7★	32
.630	.641	.276			
16,80	*17,00*	*7,00*	*S*	*7X17X7★	32
.661	.669	.276			
17,80	*18,00*	*7,00*	*S*	*7X18X7★	32
.701	.709	.276			
18,80	*19,00*	*7,00*	*S*	*7X19X7★	32
.740	.748	.276			
21,80	*22,00*	*6,00*	*S*	*7X22X6★	32
.858	.866	.236			
21,80	*22,00*	*8,00*	*S*	*7X22X8★	32
.858	.866	.315			
22,00	*22,28*	*7,00*	*S*	7X22X7★	35
.866	.877	.276			
30,80	*31,00*	*7,00*	*S*	*7X31X7★	32
1.212	1.220	.276			
.312" (5/16") SHAFT					
.500	.506	.125	S	340826	34
.625	.635	.175	S	240698	24
.686	.690	.313	S	712022	#
.749	.753	.250	S	712021	#
.750	**.756**	**.250**	**S**	**350364**	**35**
.999	**1.003**	**.375**	**S**	**470195**	**47**
1.250	1.254	.375	L	50445	5L
8,00mm (.315") SHAFT					
13,80	*14,00*	*7,00*	*S*	*8X14X7★	32
.543	.551	.276			
14,00	*14,20*	*4,00*	*S*	8X14X4★	35
.551	.559	.157			
14,00	*14,20*	*5,00*	*S*	*8X14X5★	32
.551	.559	.197			
14,80	*15,00*	*5,00*	*S*	*8X15X5★	32
.583	.591	.197			
15,80	*16,00*	*5,00*	*S*	*8X16X5★	32
.622	.630	.197			
15,80	*16,00*	*6,00*	*S*	*8X16X6★	32
.622	.630	.236			
16,00	*16,20*	*7,00*	*S*	220860★	35
.630	.638	.276			
16,00	*16,23*	*7,00*	*S*	8X16X7★	35
.630	.639	.276			
16,80	*17,00*	*7,00*	*S*	*8X17X7★	32
.661	.669	.276			
17,80	*18,00*	*6,00*	*S*	*8X18X6★	32
.701	.709	.236			
17,80	*18,00*	*8,00*	*S*	*8X18X8★	32
.701	.709	.315			
18,00	*18,20*	*5,00*	*S*	8X18X5★	35
.709	.717	.197			
18,00	*18,20*	*7,00*	*S*	8X18X7★	32
.709	.717	.276			

For Illustration and Material Data See Technical Section
Designed For A Specific Application - Not Recommended For General Use
* The U.S. customer service number is 877-4-TIMKEN. The Canadian customer service numbers are 800-565-4927 (English) and 800-565-0438 (French-Canadian). ★ Metric Seal

Hsg. Bore	Seal O.D.	Seal Width	Lip Mat'l	Part No.	Type/ Illus.
8,00mm (.315") SHAFT (cont.)					
18,00	*18,20*	*7,00*	*S*	220818★	32
.709	.717	.276			
18,80	*19,00*	*7,00*	*S*	*8X19X7★	32
.740	.748	.276			
19,80	*20,00*	*7,00*	*S*	*8X20X7★	32
.779	.787	.276			
21,80	*22,00*	*6,00*	*S*	*8X22X6★	32
.858	.866	.236			
22,00	*22,20*	*7,00*	*V*	*8X22X7V★	32
.866	.874	.276			
22,00	*22,28*	*7,00*	*S*	8X22X7★	32
.866	.877	.276			
22,80	*23,00*	*5,00*	*S*	*8X23X5★	32
.898	.906	.197			
24,00	*24,28*	*7,00*	*S*	8X24X7★	35
.945	.956	.276			
24,80	*25,00*	*7,00*	*S*	*8X25X7★	32
.976	.984	.276			
24,80	*25,00*	*8,00*	*S*	*8X25X8★	32
.976	.984	.315			
24,80	*25,00*	*9,00*	*S*	*8X25X9★	32
.976	.984	.354			
25,80	*26,00*	*7,00*	*S*	*8X26X7★	32
1.016	1.024	.276			
29,80	*30,00*	*6,00*	*S*	*8X30X6★	32
1.173	1.181	.236			
29,80	*30,00*	*7,00*	*S*	*8X30X7★	32
1.173	1.181	.276			
33,80	*34,00*	*8,00*	*S*	*8X34X8★	32
1.331	1.339	.315			
.344" (11/32") SHAFT					
.999	1.003	.375	S	*53809S	5S
8,85mm (.348") SHAFT					
16,80	*17,00*	*5,00*	*S*	*8.85X17X5★	32
.661	.669	.197			
19,80	*20,00*	*5,00*	*S*	*8.85X20X5★	32
.779	.787	.197			
9,00mm (.354") SHAFT					
15,80	*16,00*	*5,50*	*S*	*9X16X5.5★	32
.622	.630	.217			
18,00	*18,20*	*7,00*	*S*	9X18X7★	35
.709	.717	.276			
18,00	*18,20*	*7,00*	*S*	220918★	35
.709	.717	.276			
18,80	*19,00*	*5,00*	*S*	*9X19X5★	32
.740	.748	.197			
18,80	*19,00*	*7,00*	*S*	*9X19X7★	32
.740	.748	.276			
19,80	*20,00*	*7,00*	*S*	*9X20X7★	32
.779	.787	.276			
22,00	*22,20*	*7,00*	*S*	9X22X7★	35
.866	.874	.276			
22,00	*22,20*	*7,00*	*V*	*9X22X7V★	35
.866	.874	.276			
24,00	*24,28*	*7,00*	*S*	9X24X7★	35
.945	.956	.276			
24,80	*25,00*	*7,00*	*S*	*9X25X7★	32
.976	.984	.276			
26,00	*26,28*	*7,00*	*S*	9X26X7★	35
1.024	1.035	.276			
28,80	*29,00*	*7,00*	*S*	*9X29X7★	32
1.134	1.142	.276			
29,80	*30,00*	*7,00*	*S*	*9X30X7★	32
1.173	1.181	.276			

Hsg. Bore	Seal O.D.	Seal Width	Lip Mat'l	Part No.	Type/ Illus.
.375" (3/8") SHAFT					
.562	.568	.125	S	340827	34
.687	.691	.156	S	311189	31
.687	.691	.156	N	*311189N	31
.750	.754	.250	S	*40385S	4S
.750	.754	.250	H	*50385	5S
.750	.754	.250	S	50385S	5S
.750	.754	.250	S	*310385	31
.750	**.754**	**.250**	**S**	**330385**	**33**
.750	.756	.250	S	340385	34
.750	.756	.250	S	*350385	35
.750	.760	.175	S	240385	24
.750	.760	.175	N	*240385N	24
.836	.841	.187	S	444258	44
.836	**.841**	**.187**	**N**	**474279N**	**47**
.874	.883	.312	S	350156	35
.875	**.880**	**.250**	**S**	**473096**	**47**
.999	1.003	.375	H	*50197	5S
.999	1.003	.375	S	50197S	5S
.999	**1.004**	**.250**	**S**	**471103**	**47**
1.250	1.254	.375	L	*50010	5L
.390" SHAFT					
.750	.756	.250	S	*342047	34
10,00mm (.394") SHAFT					
15,80	*16,00*	*4,00*	*S*	*10X16X4★	32
.622	.630	.157			
15,80	*16,00*	*4,50*	*S*	*10X16X4.5★	32
.622	.630	.177			
16,80	*17,00*	*5,00*	*S*	*10X17X5★	32
.661	.669	.197			
16,80	*17,00*	*7,00*	*S*	*10X17X7★	32
.661	.669	.276			
17,80	*18,00*	*4,00*	*S*	*10X18X4★	32
.701	.709	.157			
17,80	*18,00*	*5,00*	*S*	*10X18X5★	32
.701	.709	.197			
17,80	*18,00*	*6,00*	*S*	*10X18X6★	32
.701	.709	.236			
17,80	*18,00*	*7,00*	*S*	*10X18X7★	32
.701	.709	.276			
19,00	*19,20*	*7,00*	*S*	10X19X7★	32
.748	.756	.276			
19,00	*19,20*	*7,00*	*S*	221040★	35
.748	.756	.276			
19,80	*20,00*	*5,00*	*S*	*10X20X5★	32
.779	.787	.197			
19,80	*20,00*	*6,00*	*S*	*10X20X6★	32
.779	.787	.236			
19,80	*20,00*	*7,00*	*S*	*10X20X7★	32
.779	.787	.276			
20,80	*21,00*	*4,00*	*S*	*10X21X4★	32
.819	.827	.157			
20,80	*21,00*	*6,00*	*S*	*10X21X6★	32
.819	.827	.236			
20,80	*21,00*	*7,00*	*S*	*10X21X7★	32
.819	.827	.276			
21,80	*22,00*	*5,00*	*S*	*10X22X5★	32
.858	.866	.197			
21,80	*22,00*	*6,00*	*S*	*10X22X6★	32
.858	.866	.236			
22,00	*22,20*	*7,00*	*V*	*10X22X7V★	35
.866	.874	.276			
22,00	*22,28*	*7,00*	*S*	10X22X7★	32
.866	.877	.276			
22,80	*23,00*	*7,00*	*S*	*10X23X7★	32
.898	.906	.276			
22,80	*23,00*	*8,00*	*S*	*10X23X8★	32
.898	.906	.315			

For Illustration and Material Data See Technical Section

* The U.S. customer service number is 877-4-TIMKEN. The Canadian customer service numbers are 800-565-4927 (English) and 800-565-0438 (French-Canadian). ★ Metric Seal

Hsg. Bore	Seal O.D.	Seal Width	Lip Mat'l	Part No.	Type/ Illus.
10,00mm (.394") SHAFT (cont.)					
23,30	*23,50*	*10,00*	*S*	*10X23.5X10★	32
.917	.925	.394			
23,80	*24,00*	*6,00*	*S*	*10X24X6★	32
.937	.945	.236			
24,00	*24,23*	*7,00*	*S*	10X24X7★	35
.945	.954	.276			
24,80	*25,00*	*5,00*	*S*	*10X25X5★	32
.976	.984	.197			
24,80	*25,00*	*10,00*	*S*	*10X25X10★	32
.976	.984	.394			
25,00	*25,28*	*7,00*	*S*	10X25X7★	32
.984	.995	.276			
25,80	*26,00*	*8,00*	*S*	*10X26X8★	32
1.016	1.024	.315			
26,00	*26,23*	*7,00*	*S*	10X26X7★	32
1.024	1.033	.276			
27,80	*28,00*	*7,00*	*S*	*10X28X7★	32
1.094	1.102	.276			
27,80	*28,00*	*8,00*	*S*	*10X28X8★	32
1.094	1.102	.315			
29,80	*30,00*	*7,00*	*S*	*10X30X7★	32
1.173	1.181	.276			
29,80	*30,00*	*10,00*	*S*	*10X30X10★	32
1.173	1.181	.394			
.402" SHAFT					
.999	1.005	.180	V	*8891	24
.408" SHAFT					
1.004	.102	.208	N	4701	49
1.004	1.008	.208	N	4701N	49
11,00mm (.433") SHAFT					
17,00	*17,25*	*4,00*	*S*	11X17X4★	32
.669	.679	.157			
20,80	*21,00*	*7,00*	*S*	*11X21X7★	32
.819	.827	.276			
20,80	*21,00*	*8,00*	*S*	*11X21X8★	32
.819	.827	.315			
22,00	*22,23*	*7,00*	*S*	221122★	35
.866	.875	.276			
22,00	*22,28*	*7,00*	*S*	11X22X7★	32
.866	.877	.276			
22,80	*23,00*	*7,00*	*S*	*11X23X7★	32
.898	.906	.276			
23,30	*23,50*	*7,00*	*S*	*11X23.5X7★	32
.917	.925	.276			
24,80	*25,00*	*7,00*	*S*	*11X25X7★	32
.976	.984	.276			
26,00	*26,28*	*7,00*	*S*	11X26X7★	35
1.024	1.035	.276			
27,80	*28,00*	*7,00*	*S*	*11X28X7★	32
1.094	1.102	.276			
28,80	*29,00*	*7,00*	*S*	*11X29X7★	32
1.134	1.142	.276			
29,80	*30,00*	*10,00*	*S*	*11X30X10★	32
1.173	1.181	.394			
30,00	*30,20*	*7,00*	*S*	11X30X7★	32
1.181	1.189	.276			
.437" (7/16") SHAFT					
.624	.633	.125	S	343101	34
.875	.879	.312	H	*50470	5S
.875	.879	.312	S	50470S	5S
.875	**.880**	**.250**	**S**	**472810**	**47**
.875	.880	.250	S	*482810	48
.875	.885	.175	S	240470	24
.999	1.003	.375	H	*50199H	5S
.999	1.003	.375	S	*50199S	5S
.437" (7/16") SHAFT (cont.)					
.999	1.003	.375	S	470199	47
.999	1.003	.375	N	*470199N	47
.999	1.003	.375	V	*470199V	47
.999	1.007	.250	S	6863S	35
1.124	**1.128**	**.250**	**S**	**474277**	**47**
1.124	1.128	.406	S	453059	45
11,60mm (.457") SHAFT					
18,80	*19,00*	*6,00*	*S*	*11.6X19X6★	32
.740	.748	.236			
23,80	*24,00*	*10,00*	*S*	*11.6X24X10★	32
.937	.945	.394			
.468" (15/32") SHAFT					
–	–	–	S	800120	VRS1
1.124	**1.126**	**.375**	**S**	**470004**	**47**
1.124	1.128	.375	L	*50004	5L
12,00mm (.472") SHAFT					
–	–	–	S	800120	VRS1
–	**–**	**.236**		**99049**	**Redi-Sleeve**
17,80	*18,00*	*5,00*	*S*	*12X18X5★	32
.701	.709	.197			
18,80	*19,00*	*7,00*	*S*	*12X19X7★	32
.740	.748	.276			
19,00	*19,20*	*5,00*	*S*	12X19X5★	32
.748	.756	.197			
19,80	*20,00*	*4,00*	*S*	*12X20X4★	32
.779	.787	.157			
19,80	*20,00*	*6,00*	*S*	*12X20X6★	32
.779	.787	.236			
19,80	*20,00*	*7,00*	*S*	*12X20X7★	32
.779	.787	.276			
20,00	*20,28*	*5,00*	*S*	12X20X5★	32
.787	.798	.197			
20,80	*21,00*	*4,00*	*S*	*12X21X4★	32
.819	.827	.157			
20,80	*21,00*	*7,00*	*S*	*12X21X7★	32
.819	.827	.276			
21,80	*22,00*	*5,00*	*S*	*12X22X5★	32
.858	.866	.197			
21,80	*22,00*	*6,50*	*S*	*12X22X6.5★	32
.858	.866	.256			
21,80	*22,00*	*8,00*	*S*	*12X22X8★	32
.858	.866	.315			
21,80	*22,00*	*9,00*	*S*	*12X22X9★	32
.858	.866	.354			
22,00	*22,20*	*7,00*	*V*	*12X22X7V★	35
.866	.874	.276			
22,00	*22,25*	*7,00*	*S*	12X22X7★	35
.866	.876	.276			
22,00	*22,25*	*7,00*	*S*	221207★	35
.866	.876	.276			
22,00	*22,25*	*7,00*	*V*	221208★	35
.866	.876	.276			
22,80	*23,00*	*7,00*	*S*	*12X23X7★	32
.898	.906	.276			
23,30	*23,50*	*7,00*	*S*	*12X23.5X7★	32
.917	.925	.276			
23,80	*24,00*	*8,00*	*S*	*12X24X8★	32
.937	.945	.315			
24,00	*24,23*	*7,00*	*S*	12X24X7★	32
.945	.954	.276			
24,80	*25,00*	*8,00*	*S*	*12X25X8★	32
.976	.984	.315			
24,80	*25,00*	*10,00*	*S*	*12X25X10★	32
.976	.984	.394			
25,00	*25,20*	*4,50*	*S*	12X25X4.5★	32
.984	.992	.177			

For Illustration and Material Data See Technical Section

* The U.S. customer service number is 877-4-TIMKEN. The Canadian customer service numbers are 800-565-4927 (English) and 800-565-0438 (French-Canadian). ★ Metric Seal

Hsg. Bore	Seal O.D.	Seal Width	Lip Mat'l	Part No.	Type/ Illus.
12,00mm (.472") SHAFT (cont.)					
25,00	*25,20*	*4,50*	*S*	12X25X4.5★	32
.984	.992	.177			
25,00	*25,25*	*7,00*	*S*	12X25X7★	32
.984	.994	.276			
25,30	*25,50*	*7,00*	*S*	* 12X25.5X7★	32
.996	1.004	.276			
1.000	1.006	.375	S	320457	32
25,80	*26,00*	*8,00*	*S*	* 12X26X8★	32
1.016	1.024	.315			
26,00	*26,20*	*7,00*	*S*	12X26X7★	32
1.024	1.031	.276			
26,80	*27,00*	*9,00*	*S*	* 12X27X9★	32
1.055	1.063	.354			
27,00	*27,20*	*7,00*	*S*	* 12X27X7★	32
1.063	1.071	.276			
27,80	*28,00*	*8,00*	*S*	* 12X28X8★	32
1.094	1.102	.315			
28,00	*28,20*	*7,00*	*S*	12X28X7★	35
1.102	1.110	.276			
28,00	*28,20*	*7,00*	*V*	* 12X28X7V★	35
1.102	1.110	.276			
28,30	*28,50*	*7,00*	*S*	* 12X28.5X7★	32
1.114	1.122	.276			
29,80	*30,00*	*5,00*	*S*	* 12X30X5★	32
1.173	1.181	.197			
29,80	*30,00*	*9,00*	*S*	* 12X30X9★	32
1.173	1.181	.354			
29,80	*30,00*	*10,00*	*S*	* 12X30X10★	32
1.173	1.181	.394			
30,00	*30,20*	*7,00*	*S*	12X30X7★	32
1.181	1.189	.276			
30,00	*30,20*	*7,00*	*V*	* 12X30X7V★	35
1.181	1.189	.276			
31,80	*32,00*	*5,00*	*S*	* 12X32X5★	32
1.252	1.260	.197			
31,80	*32,00*	*10,00*	*S*	* 12X32X10★	32
1.252	1.260	.394			
32,00	*32,20*	*7,00*	*S*	12X32X7★	35
1.260	1.268	.276			
34,80	*35,00*	*10,00*	*S*	* 12X35X10★	32
1.370	1.378	.394			
35,00	*35,20*	*7,00*	*S*	12X35X7★	32
1.378	1.386	.276			
36,80	*37,00*	*7,00*	*S*	* 12X37X7★	32
1.449	1.457	.276			
.490" SHAFT					
–	–	–	S	800120	VRS1
–	–	–	S	800130	VRS1
–	–	–	V	800134	VRS1
.688	.696	.100	S	* 9791	24
12,45mm (.490") SHAFT					
21,80	*22,00*	*7,00*	*S*	* 12.45X22X7★	32
.858	.866	.276			
.490" SHAFT					
.875	.883	.250	S	340771	34
1.122	1.132	.265	S	351028	35
12,50mm (.492") SHAFT					
21,80	*22,00*	*6,00*	*S*	* 12.5X22X6★	32
.858	.866	.236			
23,30	*23,50*	*8,00*	*S*	* 12.5X23.5X8★	32
.917	.925	.315			
23,30	*23,50*	*10,00*	*S*	* 12.5X23.5X10★	32
.917	.925	.394			
24,80	*25,00*	*8,00*	*S*	* 12.5X25X8★	32
.976	.984	.315			
12,50mm (.492") SHAFT (cont.)					
28,30	*28,50*	*7,00*	*S*	* 12.5X28.5X7★	32
1.114	1.122	.276			
.493" SHAFT					
–	–	–	S	800130	VRS1
–	–	–	V	800134	VRS1
1.000	1.004	.250	S	* 471211	47
.500" (1/2") SHAFT					
–	–	–	S	800130	VRS1
–	–	–	V	800134	VRS1
–	**–**	**.250**		**99050**	**Redi-Sleeve**
.687	.693	.093	S	342805	34
.688	.696	.100	N	* 7506N	24
.688	.696	.100	S	* 7506S	24
.749	.753	.093	S	43095S	4S
.750	.756	.125	S	340847	34
.751	.756	.192	S	8792S	31
.843	.848	.250	S	312196	31
.875	**.879**	**.187**	**S**	**330699**	**33**
.875	.879	.218	S	43080S	4S
.875	.879	.313	S	712019	#
.875	.881	.125	S	342613	34
.875	.881	.250	S	342614	34
.999	1.003	.250	S	48144	#
.999	1.003	.250	S	41442S	4S
.999	**1.003**	**.250**	**S**	**471442**	**47**
.999	1.003	.250	A	471442A	47
.999	1.003	.250	H	* 471442H	47
.999	1.003	.250	N	* 471442N	47
.999	**1.003**	**.250**	**V**	**471442V**	**47**
.999	1.003	.250	S	* 481442	48
.999	1.003	.250	N	* 481442N	48
.999	1.003	.250	V	* 481442V	48
.999	1.003	.375	S	410119	41
.999	1.003	.375	S	* 450119	45
.999	1.003	.375	S	470119	47
.999	1.003	.375	S	* 480119	48
.999	1.010	.175	S	240119	24
1.000	1.004	.250	S	* 471490	47
1.000	1.004	.250	S	* 481490	48
1.006	1.010	.250	S	1041	48
1.010	1.017	.204	V	324234V	32
1.124	1.128	.250	V	471526V	47
1.124	1.128	.250	S	41526S	4S
1.124	**1.128**	**.250**	**S**	**471526**	**47**
1.124	1.128	.250	A	471526A	47
1.124	1.128	.250	S	* 481526	48
1.124	1.128	.250	N	* 481526N	48
1.124	1.128	.312	S	* 411294	41
1.124	1.128	.312	S	* 451294	45
1.124	1.128	.312	H	* 451294H	45
1.124	1.128	.312	S	* 471294	47
1.124	1.128	.312	S	* 481294	48
1.124	1.128	.375	S	* 410005	41
1.124	1.128	.375	S	450005	45
1.124	1.128	.375	S	470005	47
1.124	1.128	.375	S	* 480005	48
1.124	1.134	.175	S	* 240005	24
1.156	1.166	.250	S	324112	32
1.250	1.254	.250	S	* 40014S	4S
1.250	**1.254**	**.250**	**S**	**471472**	**47**
1.250	1.254	.250	V	471472V	47
1.250	1.254	.250	S	* 481472	48
1.250	1.254	.250	N	* 481472N	48
1.250	1.254	.375	S	* 410014	41
1.250	1.254	.375	S	* 450014	45
1.250	1.254	.375	S	470014	47
1.250	1.254	.375	S	* 480014	48
1.375	**1.379**	**.250**	**S**	**471549**	**47**

For Illustration and Material Data See Technical Section

Designed For A Specific Application - Not Recommended For General Use

* The U.S. customer service number is 877-4-TIMKEN. The Canadian customer service numbers are 800-565-4927 (English) and 800-565-0438 (French-Canadian). ★ Metric Seal

Hsg. Bore	Seal O.D.	Seal Width	Lip Mat'l	Part No.	Type/ Illus.
.500" (1/2") SHAFT (cont.)					
1.375	1.379	.312	S	* 451555	45
1.375	1.379	.312	S	471555	47
1.375	1.379	.406	S	* 410019	41
1.375	1.379	.406	S	* 450019	45
1.375	1.379	.406	S	* 470019	47
1.375	1.379	.406	S	* 480019	48
1.378	1.382	.406	S	472467	47
13,00mm (.512") SHAFT					
–	–	–	S	800130	VRS1
–	–	–	V	800134	VRS1
19,80	*20,00*	*5,00*	*S*	* 13X20X5★	32
.779	.787	.197			
21,80	*22,00*	*5,00*	*S*	* 13X22X5★	32
.858	.866	.197			
21,80	*22,00*	*7,00*	*S*	* 13X22X7★	32
.858	.866	.276			
22,00	*22,20*	*6,00*	*S*	13X22X6★	32
.866	.874	.236			
22,00	*22,20*	*6,00*	*S*	710348★	32
.866	.874	.236			
22,80	*23,00*	*7,00*	*S*	* 13X23X7★	32
.898	.906	.276			
23,80	*24,00*	*7,00*	*S*	* 13X24X7★	32
.937	.945	.276			
24,80	*25,00*	*5,00*	*S*	* 13X25X5★	32
.976	.984	.197			
24,80	*25,00*	*7,00*	*S*	* 13X25X7★	32
.976	.984	.276			
25,80	*26,00*	*9,00*	*S*	* 13X26X9★	32
1.016	1.024	.354			
26,00	*26,20*	*7,00*	*S*	13X26X7★	32
1.024	1.031	.276			
27,00	*27,20*	*7,00*	*S*	* 13X27X7★	32
1.063	1.071	.276			
28,00	*28,20*	*7,00*	*S*	13X28X7★	32
1.102	1.110	.276			
29,80	*30,00*	*8,00*	*S*	* 13X30X8★	32
1.173	1.181	.315			
30,00	*30,20*	*7,00*	*S*	13X30X7★	32
1.181	1.189	.276			
31,80	*32,00*	*7,00*	*S*	* 13X32X7★	32
1.252	1.260	.276			
34,80	*35,00*	*7,00*	*S*	* 13X35X7★	32
1.370	1.378	.276			
.531" (17/32") SHAFT					
1.124	**1.128**	**.312**	**S**	**471530**	**47**
1.124	1.128	.375	S	* 450006	45
1.250	1.254	.250	S	* 481534	48
.540" SHAFT					
1.219	1.213	.187	S	* 7738	#
13,80mm (.543") SHAFT					
23,80	*24,00*	*5,00*	*S*	* 13.8X24X5★	32
.937	.945	.197			
14,00mm (.551") SHAFT					
20,80	*21,00*	*4,00*	*S*	* 14X21X4★	32
.819	.827	.157			
21,80	*22,00*	*4,00*	*S*	* 14X22X4★	32
.858	.866	.157			
21,80	*22,00*	*6,00*	*S*	* 14X22X6★	32
.858	.866	.236			
21,80	*22,00*	*7,00*	*S*	* 14X22X7★	32
.858	.866	.276			

Hsg. Bore	Seal O.D.	Seal Width	Lip Mat'l	Part No.	Type/ Illus.
14,00mm (.551") SHAFT (cont.)					
22,80	*23,00*	*6,00*	*S*	* 14X23X6★	32
.898	.906	.236			
23,80	*24,00*	*4,00*	*S*	* 14X24X4★	32
.937	.945	.157			
23,80	*24,00*	*5,00*	*S*	* 14X24X5★	32
.937	.945	.197			
23,80	*24,00*	*6,00*	*S*	* 14X24X6★	32
.937	.945	.236			
23,80	*24,00*	*8,00*	*S*	* 14X24X8★	32
.937	.945	.315			
24,00	*24,23*	*7,00*	*S*	221410★	35
.945	.954	.276			
24,00	*24,23*	*7,00*	*S*	14X24X7★	32
.945	.954	.276			
24,00	*24,25*	*12,70*	*S*	2004★⬅	#
.945	.955	.500			
24,80	*25,00*	*4,00*	*S*	* 14X25X4★	32
.976	.984	.157			
24,80	*25,00*	*7,00*	*S*	* 14X25X7★	32
.976	.984	.276			
24,80	*25,00*	*9,00*	*S*	* 14X25X9★	32
.976	.984	.354			
25,00	*25,20*	*7,00*	*N*	710116★	32
.984	.992	.276			
25,00	*25,23*	*5,00*	*S*	14X25X5★	32
.984	.993	.197			
1.000	1.004	.312	S	473546	47
25,80	*26,00*	*8,00*	*S*	* 14X26X8★	32
1.016	1.024	.315			
26,00	*26,23*	*7,00*	*S*	14X26X7★	32
1.024	1.033	.276			
26,80	*27,00*	*10,00*	*S*	* 14X27X10★	32
1.055	1.063	.394			
27,00	*27,20*	*7,00*	*S*	14X27X7★	32
1.063	1.071	.276			
27,80	*28,00*	*7,00*	*S*	* 14X28X7★	32
1.094	1.102	.276			
27,80	*28,00*	*7,00*	*S*	* 14X28X7★	32
1.094	1.102	.276			
28,00	*28,23*	*6,00*	*S*	14X28X6★	32
1.102	1.111	.236			
28,30	*28,50*	*7,00*	*S*	* 14X28.5X7★	32
1.114	1.122	.276			
28,80	*29,00*	*7,00*	*S*	* 14X29X7★	32
1.134	1.142	.276			
29,80	*30,00*	*7,50*	*S*	* 14X30X7.5★	32
1.173	1.181	.295			
29,80	*30,00*	*8,00*	*S*	* 14X30X8★	32
1.173	1.181	.315			
29,80	*30,00*	*9,00*	*S*	* 14X30X9★	32
1.173	1.181	.354			
29,80	*30,00*	*10,00*	*S*	* 14X30X10★	32
1.173	1.181	.394			
30,00	*30,20*	*7,00*	*S*	14X30X7★	32
1.181	1.189	.276			
30,00	*30,20*	*7,00*	*V*	* 14X30X7V★	35
1.181	1.189	.276			
31,80	*32,00*	*7,50*	*S*	* 14X32X7.5★	32
1.252	1.260	.295			
31,80	*32,00*	*10,00*	*S*	* 14X32X10★	32
1.252	1.260	.394			
32,00	*32,20*	*7,00*	*S*	14X32X7★	32
1.260	1.268	.276			
34,80	*35,00*	*8,00*	*S*	* 14X35X8★	32
1.370	1.378	.315			
34,80	*35,00*	*10,00*	*S*	* 14X35X10★	32
1.370	1.378	.394			
35,00	*35,22*	*7,00*	*S*	14X35X7★	32
1.378	1.387	.276			
35,80	*36,00*	*7,00*	*S*	* 14X36X7★	32
1.409	1.417	.276			

For Illustration and Material Data See Technical Section
Designed For A Specific Application - Not Recommended For General Use ⬅ Hydrodynamic Lip Design-CCW
* The U.S. customer service number is 877-4-TIMKEN. The Canadian customer service numbers are 800-565-4927 (English) and 800-565-0438 (French-Canadian). ★ Metric Seal

Hsg. Bore	Seal O.D.	Seal Width	Lip Mat'l	Part No.	Type/ Illus.
14,00mm (.551") SHAFT (cont.)					
39,80	*40,00*	*7,00*	*S*	*14X40X7★	32
1.567	1.575	.276			
39,80	*40,00*	*10,00*	*S*	*14X40X10★	32
1.567	1.575	.394			
.562" (9/16") SHAFT					
–	**–**	**.250**		**99056**	**Redi-Sleeve**
.750	.754	.094	S	712028	#
.810	.814	.187	N	313156	31
.810	.814	.187	N	*313156N	31
.875	.879	.187	S	314259	31
.999	1.003	.250	S	*471315	47
.999	1.003	.250	S	*481315	48
.999	1.003	.250	N	*481315N	48
.999	1.003	.250	V	*481315V	48
.999	1.003	.375	S	*410202	41
.999	1.003	.375	N	*410202N	41
.999	1.003	.375	S	*450202	45
.999	1.003	.375	N	*450202N	45
.999	1.003	.375	S	*470202	47
.999	1.003	.375	S	*480202	48
1.000	1.004	.250	V	472705V	47
1.000	**1.004**	**.250**	**S**	**472705**	**47**
1.000	1.004	.312	S	*470650	47
1.004	1.008	.254	N	718610	47
1.124	**1.128**	**.250**	**S**	**471281**	**47**
1.124	1.128	.250	S	*481281	48
1.124	1.128	.250	N	*481281N	48
1.124	1.128	.250	V	*481281V	48
1.124	1.128	.312	S	*411531	41
1.124	1.128	.312	S	*451531	45
1.124	1.128	.375	S	*410007	41
1.124	1.128	.375	S	*450007	45
1.124	1.128	.375	H	*450007H	45
1.124	1.128	.375	S	*470007	47
1.124	1.128	.375	S	*480007	48
1.124	1.128	.531	V	*3072V	49
1.124	1.135	.175	S	*240007	24
1.234	1.238	.437	S	*7708	71
1.246	1.250	.375	S	*410536	41
1.246	1.250	.375	S	450536	45
1.246	1.250	.375	N	*450536N	45
1.246	1.250	.375	S	*480536	48
1.250	**1.254**	**.250**	**S**	**471535**	**47**
1.250	1.254	.250	S	*481535	48
1.250	1.254	.375	S	*410016	41
1.250	1.254	.375	S	*450016	45
1.250	1.254	.375	H	*450016H	45
1.250	1.254	.375	S	*470016	47
1.250	1.254	.375	S	*480016	48
1.250	1.254	.375	N	*480016N	48
1.375	**1.379**	**.250**	**S**	**471551**	**47**
1.375	1.379	.250	S	*481551	48
1.375	1.379	.250	H	*481551H	48
1.375	1.379	.312	S	*411557	41
1.375	1.379	.406	S	*410021	41
1.375	1.379	.406	S	*450021	45
1.375	1.379	.406	S	*470021	47
1.375	1.379	.406	S	*480021	48
14,50mm (.571") SHAFT					
31,80	*32,00*	*7,00*	*S*	*14.5X32X7★	32
1.252	1.260	.276			
14,80mm (.583") SHAFT					
29,80	*30,00*	*7,50*	*S*	*14.8X30X7.5★	32
1.173	1.181	.295			

Hsg. Bore	Seal O.D.	Seal Width	Lip Mat'l	Part No.	Type/ Illus.
.590" SHAFT					
–	**–**	**.197**		**99059**	**Redi-Sleeve**
.997	1.006	.200	N	*4127N	34
15,00mm (.591") SHAFT					
–	**–**	**.197**		**99059**	**Redi-Sleeve**
20,00	*20,10*	*5,00*	*S*	710346★	49
.787	.791	.197			
20,80	*21,00*	*5,00*	*S*	*15X21X5★	32
.819	.827	.197			
21,80	*22,00*	*4,00*	*S*	*15X22X4★	32
.858	.866	.157			
21,80	*22,00*	*5,00*	*S*	*15X22X5★	32
.858	.866	.197			
21,80	*22,00*	*7,00*	*S*	*15X22X7★	32
.858	.866	.276			
22,80	*23,00*	*7,00*	*S*	*15X23X7★	32
.898	.906	.276			
23,80	*24,00*	*5,00*	*S*	*15X24X5★	32
.937	.945	.197			
23,80	*24,00*	*6,00*	*S*	*15X24X6★	32
.937	.945	.236			
24,00	*24,20*	*5,00*	*S*	2027★	35
.945	.953	.197			
24,00	*24,23*	*7,00*	*S*	15X24X7★	32
.945	.954	.276			
25,00	***25,20***	***5,00***	***S***	**15X25X5★**	**32**
.984	**.992**	**.197**			
25,00	*25,20*	*7,00*	*S*	15X25X7★	35
.984	.992	.276			
25,00	*25,22*	*7,00*	*S*	*350509★	35
.984	.993	.276			
25,00	*25,25*	*6,00*	*N*	15X25X6★	32
.984	.994	.236			
25,00	*25,25*	*6,00*	*N*	221510★	32
.984	.994	.236			
25,30	*25,50*	*4,50*	*S*	*15X25.5X4.5★	32
.996	1.004	.177			
25,30	*25,50*	*7,00*	*S*	*15X25.5X7★	32
.996	1.004	.276			
25,80	*26,00*	*6,00*	*S*	*15X26X6★	32
1.016	1.024	.236			
25,80	*26,00*	*8,00*	*S*	*15X26X8★	32
1.016	1.024	.315			
25,80	*26,00*	*9,00*	*S*	*15X26X9★	32
1.016	1.024	.354			
26,00	*26,23*	*7,00*	*S*	15X26X7★	32
1.024	1.033	.276			
26,80	*27,00*	*7,00*	*S*	*15X27X7★	32
1.055	1.063	.276			
26,80	*27,00*	*8,00*	*S*	*15X27X8★	32
1.055	1.063	.315			
27,80	*28,00*	*6,00*	*S*	*15X28X6★	32
1.094	1.102	.236			
27,80	*28,00*	*8,00*	*S*	*15X28X8★	32
1.094	1.102	.315			
27,80	*28,00*	*10,00*	*S*	*15X28X10★	32
1.094	1.102	.394			
27,93	*28,13*	*7,00*	*S*	*15X28.13X7★	32
1.099	1.107	.276			
28,00	*28,20*	*7,00*	*S*	15X28X7★	32
1.102	1.110	.276			
28,30	*28,50*	*7,00*	*S*	*15X28.5X7★	32
1.114	1.122	.276			
28,80	*29,00*	*7,00*	*S*	*15X29X7★	32
1.134	1.142	.276			
29,80	*30,00*	*5,00*	*S*	*15X30X5★	32
1.173	1.181	.197			
29,80	*30,00*	*7,50*	*S*	*15X30X7.5★	32
1.173	1.181	.295			

For Illustration and Material Data See Technical Section
Designed For A Specific Application - Not Recommended For General Use
* The U.S. customer service number is 877-4-TIMKEN. The Canadian customer service numbers are 800-565-4927 (English) and 800-565-0438 (French-Canadian). ★ Metric Seal

15,00mm (.591") SHAFT (cont.)

Hsg. Bore	Seal O.D.	Seal Width	Lip Mat'l	Part No.	Type/ Illus.
29,80	*30,00*	*8,00*	*S*	*15X30X8★	32
1.173	1.181	.315			
29,80	*30,00*	*10,00*	*S*	*15X30X10★	32
1.173	1.181	.394			
30,00	*30,23*	*7,00*	*S*	221540★	35
1.181	1.190	.276			
30,00	*30,23*	*7,00*	*S*	15X30X7★	32
1.181	1.190	.276			
30,80	*31,00*	*7,00*	*S*	*15X31X7★	32
1.212	1.220	.276			
31,80	*32,00*	*5,00*	*S*	*15X32X5★	32
1.252	1.260	.197			
31,80	*32,00*	*7,50*	*S*	*15X32X7.5★	32
1.252	1.260	.295			
31,80	*32,00*	*9,00*	*S*	*15X32X9★	32
1.252	1.260	.354			
32,00	*32,20*	*7,00*	*S*	15X32X7★	35
1.260	1.268	.276			
32,00	*32,20*	*7,00*	*V*	*15X32X7V★	35
1.260	1.268	.276			
32,00	*32,22*	*8,00*	*S*	15X32X8★	32
1.260	1.269	.315			
34,80	*35,00*	*5,00*	*S*	*15X35X5★	32
1.370	1.378	.197			
34,80	*35,00*	*6,00*	*S*	*15X35X6★	32
1.370	1.378	.236			
34,80	*35,00*	*8,00*	*S*	*15X35X8★	32
1.370	1.378	.315			
34,80	*35,00*	*10,00*	*S*	*15X35X10★	32
1.370	1.378	.394			
35,00	*35,20*	*7,00*	*V*	*15X35X7V★	35
1.378	1.386	.276			
35,00	*35,23*	*7,00*	*S*	15X35X7★	32
1.378	1.387	.276			
35,80	*36,00*	*7,00*	*S*	*15X36X7★	32
1.409	1.417	.276			
36,80	*37,00*	*7,00*	*S*	*15X37X7★	32
1.449	1.457	.276			
37,00	*37,20*	*6,00*	*S*	15X37X6★	32
1.457	1.465	.236			
37,80	*38,00*	*10,00*	*S*	*15X38X10★	32
1.488	1.496	.394			
38,00	*38,20*	*7,00*	*S*	*15X38X7★	32
1.496	1.504	.276			
39,80	*40,00*	*8,00*	*S*	*15X40X8★	32
1.567	1.575	.315			
39,80	*40,00*	*10,00*	*S*	*15X40X10★	32
1.567	1.575	.394			
40,00	*40,20*	*7,00*	*S*	15X40X7★	32
1.575	1.583	.276			
41,80	*42,00*	*7,00*	*S*	*15X42X7★	32
1.646	1.654	.276			
41,80	*42,00*	*8,00*	*S*	*15X42X8★	32
1.646	1.654	.315			
41,80	*42,00*	*10,00*	*S*	*15X42X10★	32
1.646	1.654	.394			

.593" (19/32") SHAFT

–	**–**	**.197**		**99059**	**Redi-Sleeve**
.935	.943	.175	S	340797	34
1.000	1.008	.203	S	*712128	32
1.124	**1.128**	**.312**	**S**	**471532**	**47**
1.124	1.128	.375	S	*450008	45
1.250	**1.254**	**.312**	**S**	**473405**	**47**
1.250	1.254	.375	S	*450017	45
1.250	1.254	.375	V	*450017V	45
1.375	1.379	.250	S	*481552	48
1.375	**1.379**	**.312**	**S**	**471558**	**47**
1.375	1.379	.406	S	*450022	45

.610" SHAFT

–	–	–	S	800160	VRS1
–	–	–	V	800164	VRS1
1.102	1.106	.600	V	710274	#

.614" SHAFT

–	–	–	S	800160	VRS1
–	–	–	V	800164	VRS1

15,60mm (.614") SHAFT

25,30	*25,50*	*7,00*	*S*	*15.6X25.5X7★	32
.996	1.004	.276			

.614" SHAFT

.999	1.006	.250	S	340724	34

.621" SHAFT

–	–	–	S	800160	VRS1
–	–	–	V	800164	VRS1
.937	.941	.187	S	*311197	31

.622" SHAFT

–	–	–	S	800160	VRS1
–	–	–	V	800164	VRS1
1.559	1.567	.453	S	*712127	32

.625" (5/8") SHAFT

–	–	–	S	800160	VRS1
–	–	–	V	800164	VRS1
–	**–**	**.313**		**99062**	**Redi-Sleeve**
.812	.820	.093	S	340387	34
.875	.879	.230	S	*9659	#
.875	.879	.230	H	*9659H	#
.875	**.880**	**.125**	**S**	**253747**	**25**
.875	.883	.093	S	340849	34
.936	.942	.187	S	343105	34
.937	.945	.187	S	7399S	24
.999	1.003	.250	S	7188S	33
.999	1.005	.250	S	351487	35
1.000	1.004	.156	N	*6792	4S
1.000	1.004	.250	S	*250416	25
1.000	1.005	.125	N	314267N	31
1.124	1.128	.250	S	48146	#
1.124	1.128	.250	S	41466S	4S
1.124	**1.128**	**.250**	**S**	**471466**	**47**
1.124	1.128	.250	A	471466A	47
1.124	1.128	.250	N	*471466N	47
1.124	**1.128**	**.250**	**V**	**471466V**	**47**
1.124	1.128	.250	S	*481466	48
1.124	1.128	.250	V	*481466V	48
1.124	1.128	.312	S	*410791	41
1.124	1.128	.312	V	410791V	41
1.124	1.128	.312	S	*450791	45
1.124	1.128	.312	V	*450791V	45
1.124	1.128	.312	S	*470791	47
1.124	1.128	.312	H	*470791H	47
1.124	1.128	.312	N	*470791N	47
1.124	1.128	.312	S	*480791	48
1.124	1.128	.375	L	*50009	5L
1.124	1.128	.375	S	*410009	41
1.124	1.128	.375	N	*410009N	41
1.124	1.128	.375	S	*450009	45
1.124	1.128	.375	V	*450009V	45
1.124	1.128	.375	S	470009	47
1.124	1.128	.375	N	*470009N	47
1.124	1.128	.375	S	*480009	48
1.124	1.128	.375	S	712017	#

For Illustration and Material Data See Technical Section
Designed For A Specific Application - Not Recommended For General Use
* The U.S. customer service number is 877-4-TIMKEN. The Canadian customer service numbers are 800-565-4927 (English) and 800-565-0438 (French-Canadian). ★ Metric Seal

.625" (5/8") SHAFT (cont.)

Hsg. Bore	Seal O.D.	Seal Width	Lip Mat'l	Part No.	Type/ Illus.
1.124	1.128	.375	S	712024	#
1.124	1.128	.531	V	*3074V	49
1.124	1.129	.250	V	*3757V	35
1.124	1.130	.250	S	340009S	34
1.124	1.130	.250	S	351466	35
1.124	1.135	.175	S	240009	24
1.124	1.135	.175	S	*240791	24
1.124	1.135	.175	N	*240791N	24
1.181	1.185	.350	V	*471291V	47
1.246	1.250	.375	S	450535	45
1.246	1.250	.375	S	*480535	48
1.250	1.254	.250	V	471264V	47
1.250	1.254	.250	S	41264S	4S
1.250	**1.254**	**.250**	**S**	**471264**	**47**
1.250	1.254	.250	A	471264A	47
1.250	1.254	.250	S	*481264	48
1.250	1.254	.375	S	*410018	41
1.250	1.254	.375	S	*450018	45
1.250	1.254	.375	S	470018	47
1.250	1.254	.375	S	*480018	48
1.375	1.379	.250	S	*40023S	4S
1.375	**1.379**	**.250**	**S**	**471255**	**47**
1.375	1.379	.250	A	471255A	47
1.375	**1.379**	**.250**	**V**	**471255V**	**47**
1.375	1.379	.250	S	*481255	48
1.375	1.379	.250	V	*481255V	48
1.375	1.379	.312	S	*411324	41
1.375	1.379	.312	S	*451324	45
1.375	1.379	.312	S	*471324	47
1.375	1.379	.312	S	*481324	48
1.375	1.379	.406	S	*410023	41
1.375	1.379	.406	S	*450023	45
1.375	1.379	.406	H	*450023H	45
1.375	1.379	.406	S	470023	47
1.375	1.379	.406	S	*480023	48
1.375	1.381	.250	S	351255	35
1.375	1.385	.175	S	240023	24
1.377	1.381	.406	S	*450557	45
1.377	1.381	.406	S	470557	47
1.499	**1.503**	**.250**	**S**	**471564**	**47**
1.499	1.503	.250	S	*481564	48
1.499	1.503	.312	S	*411577	41
1.499	1.503	.312	S	*451577	45
1.499	1.503	.312	S	*471577	47
1.499	1.503	.312	S	*481577	48
1.499	1.503	.390	S	*410975	41
1.499	1.503	.390	S	*450975	45
1.499	1.503	.390	S	*470975	47
1.499	1.503	.390	S	*480975	48
1.575	**1.579**	**.312**	**S**	**471612**	**47**
1.575	1.579	.312	S	*481612	48
1.624	1.628	.312	S	*411653	41
1.624	**1.628**	**.312**	**S**	**471653**	**47**
1.624	1.628	.437	S	*411024	41
1.624	1.628	.437	S	*451024	45
1.624	1.628	.437	S	471024	47
1.624	1.628	.437	S	*481024	48
1.624	1.628	.489	S	*472207	47
1.625	1.629	.250	S	484114	48
1.687	1.691	.750	N	*712132	#
1.752	1.756	.312	S	*471695	47
2.047	2.051	.312	S	*472137	47
2.441	2.445	.375	S	*472146	47

16,00mm (.630") SHAFT

Hsg. Bore	Seal O.D.	Seal Width	Lip Mat'l	Part No.	Type/ Illus.
–	–	–	S	800160	VRS1
–	–	–	V	800164	VRS1
–	–	.313		99058	
20,80	*21,00*	*6,00*	*S*	*16X21X6★	32
.819	.827	.236			

16,00mm (.630") SHAFT (cont.)

Hsg. Bore	Seal O.D.	Seal Width	Lip Mat'l	Part No.	Type/ Illus.
21,80	*22,00*	*7,00*	*S*	*16X22X7★	32
.858	.866	.276			
22,00	*22,20*	*4,00*	*S*	16X22X4★	32
.866	.874	.157			
23,80	*24,00*	*4,00*	*S*	*16X24X4★	32
.937	.945	.157			
24,00	*24,20*	*6,00*	*S*	16X24X6★	32
.945	.953	.236			
24,00	*24,20*	*7,00*	*S*	16X24X7★	32
.945	.953	.276			
24,80	*25,00*	*5,00*	*S*	*16X25X5★	32
.976	.984	.197			
24,80	*25,00*	*6,00*	*S*	*16X25X6★	32
.976	.984	.236			
24,80	*25,00*	*7,00*	*S*	*16X25X7★	32
.976	.984	.276			
25,00	*25,20*	*5,00*	*S*	16X24X5★	35
.984	.992	.197			
25,80	*26,00*	*5,00*	*S*	*16X26X5★	32
1.016	1.024	.197			
25,80	*26,00*	*6,00*	*S*	*16X26X6★	32
1.016	1.024	.236			
25,80	*26,00*	*6,00*	*S*	*16X26X6★	32
1.016	1.024	.236			
26,00	*26,10*	*7,00*	*S*	710243★	25
1.024	1.028	.276			
26,00	*26,20*	*7,00*	*S*	16X26X7★	32
1.024	1.031	.276			
26,80	*27,00*	*7,00*	*S*	*16X27X7★	32
1.055	1.063	.276			
27,00	*27,20*	*14,00*	*N*	221607★	#
1.063	1.071	.551			
27,23	*27,33*	*9,00*	*V*	*4662V★	47
1.072	1.076	.354			
27,23	*27,33*	*9,00*	*V*	714662★	47
1.072	1.076	.354			
28,00	*28,20*	*7,00*	*V*	*16X28X7V★	32
1.102	1.110	.276			
28,00	*28,23*	*7,00*	*N*	221610★	32
1.102	1.111	.276			
28,00	*28,23*	*7,00*	*S*	16X28X7★	32
1.102	1.111	.276			
28,30	*28,50*	*8,00*	*S*	*16X28.5X8★	32
1.114	1.122	.315			
28,80	*29,00*	*7,00*	*S*	*16X29X7★	32
1.134	1.142	.276			
29,80	*30,00*	*4,50*	*S*	*16X30X4.5★	32
1.173	1.181	.177			
29,80	*30,00*	*5,00*	*S*	*16X30X5★	32
1.173	1.181	.197			
29,80	*30,00*	*6,00*	*S*	*16X30X6★	32
1.173	1.181	.236			
29,80	*30,00*	*8,00*	*S*	*16X30X8★	32
1.173	1.181	.315			
29,80	*30,00*	*10,00*	*S*	*16X30X10★	32
1.173	1.181	.394			
30,00	*30,20*	*7,00*	*V*	*16X30X7V★	35
1.181	1.189	.276			
30,00	*30,23*	*7,00*	*S*	221620★	35
1.181	1.190	.276			
30,00	*30,23*	*7,00*	*S*	16X30X7★	32
1.181	1.190	.276			
31,80	*32,00*	*10,00*	*S*	*16X32X10★	32
1.252	1.260	.394			
32,00	*32,28*	*7,00*	*S*	16X32X7★	32
1.260	1.271	.276			
33,80	*34,00*	*4,00*	*S*	*16X34X4★	32
1.331	1.339	.157			
34,80	*35,00*	*8,00*	*S*	*16X35X8★	32
1.370	1.378	.315			
34,80	*35,00*	*10,00*	*S*	*16X35X10★	32
1.370	1.378	.394			

For Illustration and Material Data See Technical Section

Designed For A Specific Application - Not Recommended For General Use

* The U.S. customer service number is 877-4-TIMKEN. The Canadian customer service numbers are 800-565-4927 (English) and 800-565-0438 (French-Canadian). ★ Metric Seal

Hsg. Bore	Seal O.D.	Seal Width	Lip Mat'l	Part No.	Type/ Illus.
16,00mm (.630") SHAFT (cont.)					
35,00	*35,23*	*7,00*	*S*	16X35X7★	32
1.378	1.387	.276			
36,00	*36,20*	*7,00*	*S*	* 16X36X7★	32
1.417	1.425	.276			
36,80	*37,00*	*7,00*	*S*	* 16X37X7★	32
1.449	1.457	.276			
37,80	*38,00*	*8,00*	*S*	* 16X38X8★	32
1.488	1.496	.315			
38,00	*38,20*	*7,00*	*S*	16X38X7★	32
1.496	1.504	.276			
39,80	*40,00*	*10,00*	*S*	* 16X40X10★	32
1.567	1.575	.394			
40,00	*40,20*	*7,00*	*S*	16X40X7★	32
1.575	1.583	.276			
44,75	*44,96*	*9,00*	*V*	* 4616V★	#
1.762	1.770	.354			
44,75	*44,96*	*9,00*	*V*	714616★	#
1.762	1.770	.354			
56,00	*56,20*	*6,50*	*V*	710261★➡	32
2.205	2.213	.256			
.634" SHAFT					
–	–	–	S	800160	VRS1
–	–	–	V	800164	VRS1
1.246	1.255	.300	T	* 100459T	#
16,40mm (.646") SHAFT					
29,80	*30,00*	*5,00*	*S*	* 16.4X30X5★	32
1.173	1.181	.197			
.656" (21/32") SHAFT					
–	–	–	S	800160	VRS1
–	–	–	V	800164	VRS1
1.124	**1.128**	**.250**	**S**	**481528**	**48**
1.125	1.129	.375	S	* 451096	45
1.125	1.129	.375	H	* 451096H	45
1.250	**1.254**	**.250**	**S**	**481537**	**48**
1.250	1.254	.375	S	* 450469	45
1.250	1.258	.250	S	340469	34
1.250	1.258	.250	N	* 340469N	34
1.375	**1.379**	**.250**	**S**	**481073**	**48**
1.375	1.379	.312	S	* 450649	45
1.375	1.379	.406	S	* 450024	45
1.561	1.565	.250	S	* 481592	48
1.575	**1.579**	**.250**	**S**	**481397**	**48**
1.575	1.579	.312	H	* 481436H	48
1.575	1.579	.375	S	* 450780	45
1.752	1.756	.250	S	* 481682	48
.668" SHAFT					
–	–	–	S	800160	VRS1
–	–	–	V	800164	VRS1
–	**–**	**.315**		**99068**	**Redi-Sleeve**
1.187	**1.191**	**.185**	**S**	**481481**	**48**
17,00mm (.669") SHAFT					
–	–	–	S	800160	VRS1
–	–	–	V	800164	VRS1
–	**–**	**.315**		**99068**	**Redi-Sleeve**
20,80	*20,90*	*3,10*	*S*	710361★	44
.819	.823	.122			
23,80	*24,00*	*7,00*	*S*	* 17X24X7★	32
.937	.945	.276			
24,80	*25,00*	*4,00*	*S*	* 17X25X4★	32
.976	.984	.157			
24,80	*25,00*	*6,00*	*S*	* 17X25X6★	32
.976	.984	.236			

Hsg. Bore	Seal O.D.	Seal Width	Lip Mat'l	Part No.	Type/ Illus.
17,00mm (.669") SHAFT (cont.)					
24,80	*25,00*	*7,00*	*S*	* 17X25X7★	32
.976	.984	.276			
25,00	*25,10*	*5,00*	*S*	710362★	49
.984	.988	.197			
25,80	*26,00*	*6,00*	*S*	* 17X26X6★	32
1.016	1.024	.236			
25,80	*26,00*	*7,00*	*S*	* 17X26X7★	32
1.016	1.024	.276			
26,80	*27,00*	*5,00*	*S*	* 17X27X5★	32
1.055	1.063	.197			
26,80	*27,00*	*8,00*	*S*	* 17X27X8★	32
1.055	1.063	.315			
26,80	*27,00*	*10,00*	*S*	* 17X27X10★	32
1.055	1.063	.394			
27,00	*27,20*	*7,00*	*S*	17X27X7★	32
1.063	1.071	.276			
27,80	*28,00*	*4,50*	*S*	* 17X28X4.5★	32
1.094	1.102	.177			
27,80	*28,00*	*5,00*	*S*	* 17X28X5★	32
1.094	1.102	.197			
27,80	*28,00*	*6,00*	*S*	* 17X28X6★	32
1.094	1.102	.236			
27,80	*28,00*	*8,00*	*S*	* 17X28X8★	32
1.094	1.102	.315			
28,00	*28,20*	*7,00*	*V*	* 17X28X7V★	35
1.102	1.110	.276			
28,00	*28,23*	*7,00*	*S*	221710★	35
1.102	1.111	.276			
28,00	*28,23*	*7,00*	*S*	17X28X7★	35
1.102	1.111	.276			
28,30	*28,50*	*7,00*	*S*	* 17X28.5X7★	32
1.114	1.122	.276			
28,80	*29,00*	*5,00*	*S*	* 17X29X5★	32
1.134	1.142	.197			
29,00	*29,20*	*7,00*	*S*	* 17X29X7★	32
1.142	1.150	.276			
29,80	*30,00*	*5,00*	*S*	* 17X30X5★	32
1.173	1.181	.197			
29,80	*30,00*	*6,00*	*S*	* 17X30X6★	32
1.173	1.181	.236			
29,80	*30,00*	*6,00*	*S*	* 17X30X6★	32
1.173	1.181	.236			
29,80	*30,00*	*8,00*	*S*	* 17X30X8★	32
1.173	1.181	.315			
29,80	*30,00*	*10,00*	*S*	* 17X30X10★	32
1.173	1.181	.394			
30,00	*30,20*	*7,00*	*V*	* 17X30X7V★	35
1.181	1.189	.276			
30,00	*30,23*	*8,00*	*S*	221720★	32
1.181	1.190	.276			
30,00	*30,23*	*7,00*	*S*	17X30X7★	32
1.181	1.190	.276			
30,80	*31,00*	*7,00*	*S*	* 17X31X7★	32
1.212	1.220	.276			
30,80	*31,00*	*8,00*	*S*	* 17X31X8★	32
1.212	1.220	.315			
31,55	*31,75*	*8,00*	*S*	* 17X31.75X8★	32
1.242	1.250	.315			
31,80	*32,00*	*5,00*	*S*	* 17X32X5★	32
1.252	1.260	.197			
31,80	*32,00*	*6,00*	*S*	* 17X32X6★	32
1.252	1.260	.236			
31,80	*32,00*	*8,00*	*S*	* 17X32X8★	32
1.252	1.260	.315			
32,00	*32,22*	*7,00*	*S*	221730★	35
1.260	1.269	.276			
32,00	*32,22*	*7,00*	*S*	17X32X7★	32
1.260	1.269	.276			
32,80	*33,00*	*7,00*	*S*	* 17X33X7★	32
1.291	1.299	.276			
33,80	*34,00*	*4,00*	*S*	* 17X34X4★	32
1.331	1.339	.157			

For Illustration and Material Data See Technical Section
Designed For A Specific Application - Not Recommended For General Use ➡ Hydrodynamic Lip Design-CW
* The U.S. customer service number is 877-4-TIMKEN. The Canadian customer service numbers are 800-565-4927 (English) and 800-565-0438 (French-Canadian). ★ Metric Seal

Hsg. Bore	Seal O.D.	Seal Width	Lip Mat'l	Part No.	Type/ Illus.
17,00mm (.669") SHAFT (cont.)					
33,80	*34,00*	*7,00*	*S*	*17X34X7★	32
1.331	1.339	.276			
34,00	*34,10*	*7,90*	*N*	710251★	47
1.339	1.343	.311			
34,30	*34,50*	*4,00*	*S*	*17X34.5X4★	32
1.350	1.358	.157			
34,80	*35,00*	*6,00*	*S*	*17X35X6★	32
1.370	1.378	.236			
34,80	*35,00*	*10,00*	*S*	*17X35X10★	32
1.370	1.378	.394			
35,00	*35,18*	*7,00*	*S*	17X35X7★	35
1.378	1.385	.276			
35,00	*35,18*	*7,00*	*S*	221735★	35
1.378	1.385	.276			
35,00	*35,20*	*7,00*	*V*	*17X35X7V★	35
1.378	1.386	.276			
35,00	*35,20*	*8,00*	*S*	17X35X8★	35
1.378	1.386	.315			
36,00	*36,20*	*7,00*	*S*	*17X36X7★	32
1.417	1.425	.276			
36,80	*37,00*	*10,00*	*S*	*17X37X10★	32
1.449	1.457	.394			
37,00	*37,20*	*7,00*	*S*	17X37X7★	32
1.457	1.465	.276			
37,80	*38,00*	*10,00*	*S*	*17X38X10★	32
1.488	1.496	.394			
38,00	*38,20*	*7,00*	*S*	17X38X7★	32
1.496	1.504	.276			
39,80	*40,00*	*5,00*	*S*	*17X40X5★	32
1.567	1.575	.197			
39,80	*40,00*	*8,00*	*S*	*17X40X8★	32
1.567	1.575	.315			
39,80	*40,00*	*10,00*	*S*	*17X40X10★	32
1.567	1.575	.394			
40,00	*40,23*	*7,00*	*S*	17X40X7★	32
1.575	1.584	.276			
42,00	*42,20*	*7,00*	*S*	*17X42X7★	32
1.654	1.661	.276			
45,00	*45,20*	*7,00*	*S*	*17X45X7★	32
1.772	1.780	.276			
45,80	*46,00*	*6,00*	*S*	*17X46X6★	32
1.803	1.811	.236			
46,00	*46,20*	*7,00*	*S*	*17X46X7★	32
1.811	1.819	.276			
46,80	*47,00*	*10,00*	*S*	*17X47X10★	32
1.842	1.850	.394			
47,00	*47,20*	*7,00*	*S*	17X47X7★	35
1.850	1.858	.276			
47,00	*47,20*	*8,00*	*S*	17X47X8★	32
1.850	1.858	.315			
17,40mm (.685") SHAFT					
–	–	–	S	800160	VRS1
–	–	–	V	800164	VRS1
–	**–**	**.313**		**99060**	**Redi-Sleeve**
30,00	*30,20*	*7,00*	*S*	710344★	32
1.181	1.189	.276			
.687" (11/16") SHAFT					
–	–	–	S	800160	VRS1
–	–	–	V	800164	VRS1
1.124	**1.128**	**.250**	**S**	**471529**	**47**
1.124	1.128	.250	S	*481529	48
1.124	1.128	.250	N	*481529N	48
1.124	1.128	.312	S	*451297	45
1.124	1.128	.375	S	*410137	41
1.124	1.128	.375	S	*450137	45
1.124	1.128	.375	S	*470137	47
1.124	1.128	.375	S	*480137	48
1.125	1.129	.312	S	*411297	41
.687" (11/16") SHAFT (cont.)					
1.125	1.129	.312	S	*471297	47
1.125	1.129	.312	N	*471297N	47
1.187	**1.191**	**.187**	**S**	**474261**	**47**
1.250	1.254	.250	S	8773S➡	25
1.250	**1.254**	**.250**	**S**	**471538**	**47**
1.250	1.254	.250	S	481538	48
1.250	1.254	.250	V	*481538V	48
1.250	1.254	.375	S	*410355	41
1.250	1.254	.375	S	*450355	45
1.250	1.254	.375	S	*470355	47
1.250	1.254	.375	S	*480355	48
1.375	**1.379**	**.250**	**S**	**471553**	**47**
1.375	1.379	.250	S	*481553	48
1.375	1.379	.312	S	*451559	45
1.375	1.379	.312	S	*471559	47
1.375	1.379	.406	S	*410025	41
1.375	1.379	.406	S	450025	45
1.375	1.379	.406	S	470025	47
1.375	1.379	.406	S	*480025	48
1.499	**1.503**	**.312**	**S**	**471579**	**47**
1.499	1.503	.312	S	*481579	48
1.499	1.503	.390	S	*410205	41
1.499	1.503	.390	S	*450205	45
1.499	1.503	.390	N	*450205N	45
1.499	1.503	.390	S	*470205	47
1.499	1.503	.390	S	*480205	48
1.624	**1.628**	**.250**	**S**	**471642**	**47**
17,50mm (.689") SHAFT					
–	–	–	S	800160	VRS1
–	–	–	V	800164	VRS1
27,50	*27,70*	*7,00*	*N*	710299★	#
1.083	1.091	.276			
31,80	*32,00*	*6,00*	*S*	*17.5X32X6★	32
1.252	1.260	.236			
.690" SHAFT					
–	–	–	S	800160	VRS1
–	–	–	V	800164	VRS1
.997	1.003	.295	S	3667&	271
17,60mm (.693") SHAFT					
29,80	*30,00*	*7,00*	*S*	*17.6X30X7★	32
1.173	1.181	.276			
.697" SHAFT					
1.220	1.227	.204	V	*320242	32
.701" SHAFT					
1.160	1.164	.250	S	331173	33
18,00mm (.709") SHAFT					
–	**–**	**.315**		***99082**	**Redi-Sleeve**
23,00	*23,20*	*4,00*	*S*	710297★	34
.906	.913	.157			
24,80	*25,00*	*7,00*	*S*	*18X25X7★	32
.976	.984	.276			
25,80	*26,00*	*7,00*	*S*	*18X26X7★	32
1.016	1.024	.276			
26,00	*26,10*	*4,00*	*S*	710222★	98
1.024	1.028	.157			
26,80	*27,00*	*7,00*	*S*	*18X27X7★	32
1.055	1.063	.276			
27,80	*28,00*	*7,00*	*S*	*18X28X7★	32
1.094	1.102	.276			

For Illustration and Material Data See Technical Section

Designed For A Specific Application - Not Recommended For General Use ➡ Hydrodynamic Lip Design-CW & Flanged O.D.

* The U.S. customer service number is 877-4-TIMKEN. The Canadian customer service numbers are 800-565-4927 (English) and 800-565-0438 (French-Canadian). ★ Metric Seal

Hsg. Bore	Seal O.D.	Seal Width	Lip Mat'l	Part No.	Type/ Illus.
18,00mm (.709") SHAFT (cont.)					
27,80	*28,00*	*8,00*	*S*	* 18X28X8★	32
1.094	1.102	.315			
27,80	*28,00*	*10,00*	*S*	* 18X28X10★	32
1.094	1.102	.394			
28,00	*28,20*	*6,00*	*S*	1015★	35
1.102	1.110	.236			
28,00	*28,20*	*6,00*	*S*	1015N★	35
1.102	1.110	.236			
28,00	*28,20*	*6,00*	*N*	* 4400★	34
1.102	1.110	.236			
28,00	*28,20*	*7,00*	*V*	* 18X28X7V★	35
1.102	1.110	.276			
28,00	*28,28*	*6,00*	*S*	18X28X6★	32
1.102	1.113	.236			
28,80	*29,00*	*7,00*	*S*	* 18X29X7★	32
1.134	1.142	.276			
29,80	*30,00*	*6,00*	*S*	* 18X30X6★	32
1.173	1.181	.236			
29,80	*30,00*	*6,00*	*S*	* 18X30X6★	32
1.173	1.181	.236			
29,80	*30,00*	*8,00*	*S*	* 18X30X8★	32
1.173	1.181	.315			
29,80	*30,00*	*10,00*	*S*	* 18X30X10★	32
1.173	1.181	.394			
30,00	*30,10*	*6,70*	*S*	3816★&	271
1.181	1.185	.264			
30,00	*30,23*	*7,00*	*S*	18X30X7★	32
1.181	1.190	.276			
30,00	*30,23*	*9,00*	*S*	221820★➡	32
1.181	1.190	.354			
30,80	*31,00*	*7,00*	*S*	* 18X31X7★	32
1.212	1.220	.276			
31,80	*32,00*	*6,00*	*S*	* 18X32X6★	32
1.252	1.260	.236			
31,80	*32,00*	*10,00*	*S*	* 18X32X10★	32
1.252	1.260	.394			
32,00	*32,10*	*7,00*	*S*	710156★	#
1.260	1.264	.276			
32,00	*32,20*	*7,00*	*S*	18X32X7★	35
1.260	1.268	.276			
32,00	*32,20*	*7,00*	*V*	* 18X32X7V★	35
1.260	1.268	.276			
32,00	*32,22*	*8,00*	*S*	221830★	35
1.260	1.269	.315			
32,00	*32,22*	*8,00*	*S*	18X32X8★	32
1.260	1.269	.315			
32,00	*32,23*	*12,70*	*N*	* 4401★	#
1.260	1.269	.500			
33,80	*34,00*	*7,00*	*S*	* 18X34X7★	32
1.331	1.339	.276			
34,00	*34,20*	*8,00*	*S*	710412★	32
1.339	1.346	.315			
34,80	*35,00*	*8,00*	*S*	* 18X35X8★	32
1.370	1.378	.315			
34,80	*35,00*	*10,00*	*S*	* 18X35X10★	32
1.370	1.378	.394			
35,00	*35,18*	*7,00*	*S*	18X35X7★	32
1.378	1.385	.276			
35,00	*35,20*	*8,00*	*V*	* 18X35X8V★	35
1.378	1.386	.315			
36,00	*36,20*	*7,00*	*S*	* 18X36X7★	32
1.417	1.425	.276			
36,80	*37,00*	*7,00*	*S*	* 18X37X7★	32
1.449	1.457	.276			
37,00	*37,20*	*8,00*	*S*	18X37X8★	32
1.457	1.465	.315			
37,80	*38,00*	*10,00*	*S*	* 18X38X10★	32
1.488	1.496	.394			
38,00	*38,20*	*7,00*	*S*	18X38X7★	32
1.496	1.504	.276			
39,80	*40,00*	*10,00*	*S*	* 18X40X10★	32
1.567	1.575	.394			

Hsg. Bore	Seal O.D.	Seal Width	Lip Mat'l	Part No.	Type/ Illus.
18,00mm (.709") SHAFT (cont.)					
40,00	*40,22*	*7,00*	*S*	18X40X7★	32
1.575	1.583	.276			
40,00	*40,20*	*7,00*	*V*	* 18X40X7V★	35
1.575	1.583	.276			
41,80	*42,00*	*7,00*	*S*	* 18X42X7★	32
1.646	1.654	.276			
41,80	*42,00*	*10,00*	*S*	* 18X42X10★	32
1.646	1.654	.394			
.718" SHAFT					
1.250	1.254	.375	L	* 50506	5L
1.250	**1.254**	**.375**	**S**	**470506**	**47**
.735" SHAFT					
1.248	1.252	.250	S	472878	47
18,70mm (.736") SHAFT					
35,00	*35,20*	*7,00*	*N*	710272★	32
1.378	1.386	.276			
.737" SHAFT					
1.375	1.379	.343	S	473416	47
1.375	1.382	.312	S	* 3802	#
.739" SHAFT					
1.250	1.254	.407	S	* 4084	#
.742" SHAFT					
1.063	1.067	.187	S	7929S	33
19,00mm (.748") SHAFT					
–	**–**	**.313**		**99076**	**Redi-Sleeve**
–	**–**	**.375**		**99075**	**Redi-Sleeve**
24,80	*25,00*	*6,00*	*S*	* 19X25X6★	32
.976	.984	.236			
26,80	*27,00*	*5,00*	*S*	* 19X27X5★	32
1.055	1.063	.197			
26,80	*27,00*	*10,00*	*S*	* 19X27X10★	32
1.055	1.063	.394			
27,00	*27,20*	*6,00*	*S*	19X27X6★	35
1.063	1.071	.236			
27,80	*28,00*	*7,00*	*S*	* 19X28X7★	32
1.094	1.102	.276			
28,80	*29,00*	*7,00*	*S*	* 19X29X7★	32
1.134	1.142	.276			
30,00	***30,20***	***7,00***	***S***	**19X30X7★**	**32**
1.181	**1.189**	**.276**			
30,00	*30,20*	*7,00*	*S*	221920★	32
1.181	1.189	.276			
31,80	*32,00*	*5,00*	*S*	* 19X32X5★	32
1.252	1.260	.197			
31,80	*32,00*	*6,00*	*S*	* 19X32X6★	32
1.252	1.260	.236			
31,80	*32,00*	*10,00*	*S*	* 19X32X10★	32
1.252	1.260	.394			
32,00	*32,20*	*7,00*	*S*	19X32X7★	35
1.260	1.268	.276			
32,00	*32,20*	*8,00*	*S*	19X32X8★	32
1.260	1.268	.315			
32,00	*32,20*	*8,00*	*S*	221922★	32
1.260	1.268	.315			
32,80	*33,00*	*8,00*	*S*	* 19X33X8★	32
1.291	1.299	.315			
33,30	*33,50*	*7,00*	*S*	* 19X33.5X7★	32
1.311	1.319	.276			

For Illustration and Material Data See Technical Section

Designed For A Specific Application - Not Recommended For General Use ➡ Hydrodynamic Lip Design-CW & Flanged O.D.

* The U.S. customer service number is 877-4-TIMKEN. The Canadian customer service numbers are 800-565-4927 (English) and 800-565-0438 (French-Canadian). ★ Metric Seal

19,00mm (.748") SHAFT (cont.)

Hsg. Bore	Seal O.D.	Seal Width	Lip Mat'l	Part No.	Type/ Illus.
33,80	*34,00*	*7,00*	*S*	**19X34X7★*	32
1.331	1.339	.276			
34,80	*35,00*	*7,00*	*S*	**19X35X7★*	32
1.370	1.378	.276			
34,80	*35,00*	*8,00*	*S*	**19X35X8★*	32
1.370	1.378	.315			
34,93	*35,00*	*8,00*	*S*	*710445★*	35
1.375	1.378	.315			
35,00	*35,23*	*10,00*	*S*	*19X35X10★*	32
1.378	1.387	.394			
35,00	*35,23*	*10,00*	*S*	*710273★*	35
1.378	1.387	.394			
35,80	*36,00*	*7,00*	*S*	**19X36X7★*	32
1.409	1.417	.276			
36,00	*36,23*	*6,50*	*S*	*221925★*	35
1.417	1.426	.256			
36,80	*37,00*	*10,00*	*S*	**19X37X10★*	32
1.449	1.457	.394			
37,00	*37,20*	*7,00*	*S*	**19X37X7★*	32
1.457	1.465	.276			
37,80	*38,00*	*8,00*	*S*	**19X38X8★*	32
1.488	1.496	.315			
37,80	*38,00*	*10,00*	*S*	**19X38X10★*	32
1.488	1.496	.394			
38,00	*38,20*	*7,00*	*S*	**19X38X7★*	32
1.496	1.504	.276			
38,00	*38,20*	*7,00*	*S*	*710154★*	32
1.496	1.504	.276			
1.499	1.504	.312	S	*2855	#
39,80	*40,00*	*7,00*	*S*	**19X40X7★*	32
1.567	1.575	.276			
40,00	*40,23*	*10,00*	*S*	*19X40X10★*	35
1.575	1.584	.394			
40,80	*41,00*	*7,00*	*S*	**19X41X7★*	32
1.606	1.614	.276			
42,00	*42,20*	*7,00*	*S*	**19X42X7★*	32
1.654	1.661	.276			
45,00	*45,20*	*7,00*	*S*	**19X45X7★*	32
1.772	1.780	.276			
46,00	*46,20*	*7,00*	*S*	**19X46X7★*	32
1.811	1.819	.276			
47,00	*47,20*	*7,00*	*S*	*19X47X7★*	32
1.850	1.858	.276			
47,63	*47,73*	*6,35*	*S*	**43361★*	4S
1.875	1.879	.250			

.750" (3/4") SHAFT

Hsg. Bore	Seal O.D.	Seal Width	Lip Mat'l	Part No.	Type/ Illus.
–	–	–	S	800200	VRS1
–	–	–	V	800204	VRS1
–	**–**	**.313**		**99076**	**Redi-Sleeve**
–	**–**	**.375**		**99075**	**Redi-Sleeve**
.999	1.010	.156	S	240735	24
1.000	1.004	.125	S	727410	44
1.000	1.005	.125	S	312518	31
1.000	1.005	.125	S	342518	34
1.031	1.035	.313	S	7214	49
1.062	1.072	.187	S	240816	24
1.124	1.128	.188	S	7750	48
1.124	**1.129**	**.187**	**S**	**254270**	**25**
1.124	1.133	.250	S	340495	34
1.125	1.129	.250	S	1049	33
1.125	1.131	.156	S	343185	34
1.187	1.191	.156	S	*313043	31
1.250	1.254	.250	S	41389S	4S
1.250	**1.254**	**.250**	**S**	**470954**	**47**
1.250	1.254	.250	A	470954A	47
1.250	1.254	.250	H	*470954H	47
1.250	1.254	.250	N	*470954N	47
1.250	**1.254**	**.250**	**V**	**470954V**	**47**
1.250	1.254	.250	S	480954	48

.750" (3/4") SHAFT (cont.)

Hsg. Bore	Seal O.D.	Seal Width	Lip Mat'l	Part No.	Type/ Illus.
1.250	1.254	.250	N	*480954N	48
1.250	1.254	.250	V	480954V	48
1.250	1.254	.250	S	712027	#
1.250	1.254	.280	S	2287	274
1.250	1.254	.312	S	6835S	33
1.250	1.254	.375	S	*410141	41
1.250	1.254	.375	S	*450141	45
1.250	1.254	.375	V	*450141V	45
1.250	1.254	.375	S	470141	47
1.250	1.254	.375	S	*480141	48
1.250	1.254	.375	H	*480141H	48
1.250	1.254	.375	S	712014	#
1.250	1.254	.437	S	*3075	282
1.250	1.255	.275	S	*473571	47
1.250	1.256	.250	S	350954	35
1.250	1.258	.312	S	350679	35
1.263	1.267	.250	S	*472129	47
1.302	1.306	.250	S	474131	47
1.311	1.315	.312	S	*252450	25
1.311	1.315	.312	S	7013S	25
1.312	**1.316**	**.250**	**S**	**480821**	**48**
1.375	1.379	.250	S	40027S	4S
1.375	**1.379**	**.250**	**S**	**471554**	**47**
1.375	1.379	.250	A	471554A	47
1.375	1.379	.250	N	*471554N	47
1.375	**1.379**	**.250**	**V**	**471554V**	**47**
1.375	1.379	.250	S	*481554	48
1.375	1.379	.250	N	*481554N	48
1.375	1.379	.250	V	*481554V	48
1.375	1.379	.312	S	7028	25
1.375	1.379	.312	V	*7028V	25
1.375	1.379	.312	S	*410895	41
1.375	1.379	.312	S	*450895	45
1.375	1.379	.312	V	*450895V	45
1.375	1.379	.312	S	470895	47
1.375	1.379	.312	S	*480895	48
1.375	1.379	.406	V	*50027	5L
1.375	1.379	.406	S	*410027	41
1.375	1.379	.406	S	*450027	45
1.375	1.379	.406	H	*450027H	45
1.375	1.379	.406	N	*450027N	45
1.375	1.379	.406	S	470027	47
1.375	1.379	.406	S	*480027	48
1.375	1.379	.406	H	*480027H	48
1.375	1.379	.500	S	*73289S	7S
1.499	**1.503**	**.250**	**S**	**471567**	**47**
1.499	1.503	.250	S	*481567	48
1.499	1.503	.312	S	*411580	41
1.499	1.503	.312	S	*451580	45
1.499	1.503	.312	H	*451580H	45
1.499	1.503	.312	S	*471580	47
1.499	1.503	.312	S	*481580	48
1.499	1.503	.390	S	*410028	41
1.499	1.503	.390	S	*450028	45
1.499	1.503	.390	S	*470028	47
1.499	1.503	.390	S	*480028	48
1.561	1.565	.375	S	*410340	41
1.561	**1.565**	**.375**	**S**	**450340**	**45**
1.561	1.565	.375	S	470340	47
1.561	1.565	.375	S	*480340	48
1.575	**1.579**	**.312**	**S**	**471498**	**47**
1.575	1.579	.312	H	*471498H	47
1.575	1.579	.375	S	*410580	41
1.575	1.579	.375	S	*450580	45
1.624	**1.628**	**.250**	**S**	**471643**	**47**
1.624	1.628	.250	S	*481643	48
1.624	1.628	.312	S	*411656	41
1.624	1.628	.312	S	*451656	45
1.624	1.628	.312	S	*471656	47
1.624	1.628	.312	H	*471656H	47
1.624	1.628	.312	S	*481656	48
1.624	1.628	.312	V	*481656V	48

For Illustration and Material Data See Technical Section

Designed For A Specific Application - Not Recommended For General Use

* The U.S. customer service number is 877-4-TIMKEN. The Canadian customer service numbers are 800-565-4927 (English) and 800-565-0438 (French-Canadian). ★ Metric Seal

.750" (3/4") SHAFT (cont.)

Hsg. Bore	Seal O.D.	Seal Width	Lip Mat'l	Part No.	Type/ Illus.
1.624	1.628	.437	S	*410211	41
1.624	1.628	.437	S	*450211	45
1.624	1.628	.437	S	470211	47
1.624	1.628	.437	S	*480211	48
1.752	**1.756**	**.250**	**S**	**471684**	**47**
1.752	1.756	.250	S	*481684	48
1.752	1.756	.312	S	*411698	41
1.752	1.756	.312	S	471698	47
1.752	1.756	.375	S	*481428	48
1.752	1.756	.437	S	*410222	41
1.752	1.756	.437	S	*450222	45
1.752	1.756	.437	S	*470222	47
1.752	1.756	.437	S	*480222	48
1.783	1.787	.250	S	*473196	47
1.828	1.832	.375	S	473406	47
1.828	1.832	.437	S	*410033	41
1.828	1.832	.437	S	*450033	45
1.828	1.832	.437	S	470033	47
1.828	1.832	.437	S	*480033	48
1.874	**1.878**	**.250**	**S**	**470390**	**47**
1.874	1.878	.250	N	*470390N	47
1.874	1.878	.250	S	*480390	48
1.874	1.878	.437	S	*410610	41
1.874	1.878	.437	S	*450610	45
1.874	1.878	.437	S	*470610	47
1.874	1.878	.437	S	*480610	48
1.983	1.987	.250	S	473407	47
1.983	1.987	.437	S	*411385	41
1.983	1.987	.437	S	*451385	45
1.983	1.987	.437	S	*471385	47
1.983	1.987	.437	S	*481385	48
2.047	**2.051**	**.312**	**S**	**472649**	**47**
2.127	**2.131**	**.250**	**S**	**472538**	**47**
2.374	2.378	.375	S	*472361	47

.762" SHAFT

Hsg. Bore	Seal O.D.	Seal Width	Lip Mat'l	Part No.	Type/ Illus.
–	–	–	S	800200	VRS1
–	–	–	V	800204	VRS1
1.160	1.164	.250	S	8750S	33

19,50mm (.768") SHAFT

Hsg. Bore	Seal O.D.	Seal Width	Lip Mat'l	Part No.	Type/ Illus.
34,80	*35,00*	*6,00*	*S*	*19.5X35X6★	32
1.370	1.378	.236			

19,80mm (.780") SHAFT

Hsg. Bore	Seal O.D.	Seal Width	Lip Mat'l	Part No.	Type/ Illus.
29,80	*30,00*	*5,00*	*S*	*19.8X30X5★	32
1.173	1.181	.197			

.781" (25/32") SHAFT

Hsg. Bore	Seal O.D.	Seal Width	Lip Mat'l	Part No.	Type/ Illus.
–	–	–	S	800200	VRS1
–	–	–	V	800204	VRS1
–	**–**	**.313**		***99080**	**Redi-Sleeve**
1.250	**1.254**	**.250**	**S**	**470601**	**47**
1.250	1.254	.250	S	*480601	48
1.250	1.254	.375	S	*471540	47
1.250	1.254	.375	V	471540V	47
1.375	1.379	.250	V	481443V	48
1.375	1.379	.250	S	471443	47
1.375	1.379	.250	N	*471443N	47
1.375	**1.379**	**.250**	**S**	**481443**	**48**
1.375	1.379	.312	S	*451560	45
1.375	1.379	.312	N	*451560N	45
1.375	1.379	.312	S	*471560	47
1.375	1.379	.406	S	*410203	41
1.375	1.379	.406	S	*450203	45
1.375	1.379	.406	S	*470203	47
1.378	1.382	.406	S	*451031	45
1.378	1.382	.406	S	*471031	47

.781" (25/32") SHAFT (cont.)

Hsg. Bore	Seal O.D.	Seal Width	Lip Mat'l	Part No.	Type/ Illus.
1.499	**1.503**	**.250**	**S**	**481568**	**48**
1.499	1.503	.312	S	*451581	45
1.499	1.503	.312	S	*471581	47
1.499	1.503	.390	S	*450029	45
1.499	1.503	.390	S	*470029	47
1.624	**1.628**	**.250**	**S**	**481644**	**48**
1.624	1.628	.437	S	*470212	47
1.752	1.756	.312	S	*411337	41
1.752	1.756	.312	S	471337	47
1.752	1.756	.437	S	*450223	45
1.752	1.756	.437	S	*470223	47
1.828	1.832	.437	S	*450034	45
1.828	1.832	.437	S	470034	47
1.828	**1.833**	**.250**	**S**	**474273**	**47**
1.850	1.854	.312	S	*482089	48
1.850	1.854	.375	S	*472237	47
1.874	1.878	.437	S	*451739	45

20,00mm (.787") SHAFT

Hsg. Bore	Seal O.D.	Seal Width	Lip Mat'l	Part No.	Type/ Illus.
–	–	–	S	800200	VRS1
–	–	–	V	800204	VRS1
–	**–**	**.313**		**99078**	**Redi-Sleeve**
24,80	*25,00*	*7,00*	*S*	*20X25X7★	32
.976	.984	.276			
25,80	*26,00*	*4,00*	*S*	*20X26X4★	32
1.016	1.024	.157			
25,80	*26,00*	*5,00*	*S*	*20X26X5★	32
1.016	1.024	.197			
25,80	*26,00*	*5,60*	*S*	*20X26X5.6★	32
1.016	1.024	.220			
26,00	*26,20*	*4,00*	*S*	710249★	97
1.024	1.031	.157			
26,80	*27,00*	*5,00*	*S*	*20X27X5★	32
1.055	1.063	.197			
27,80	*28,00*	*4,00*	*S*	*20X28X4★	32
1.094	1.102	.157			
27,80	*28,00*	*7,00*	*S*	*20X28X7★	32
1.094	1.102	.276			
28,00	*28,20*	*6,00*	*S*	20X28X6★	32
1.102	1.110	.236			
29,80	*30,00*	*4,50*	*S*	*20X30X4.5★	32
1.173	1.181	.177			
29,80	*30,00*	*5,50*	*S*	*20X30X5.5★	32
1.173	1.181	.217			
29,80	*30,00*	*6,00*	*S*	*20X30X6★	32
1.173	1.181	.236			
29,80	*30,00*	*9,00*	*S*	*20X30X9★	32
1.173	1.181	.354			
29,80	*30,00*	*10,00*	*S*	*20X30X10★	32
1.173	1.181	.394			
30,00	*30,20*	*5,00*	*S*	20X30X5★	35
1.181	1.189	.197			
30,00	*30,20*	*5,00*	*V*	*20X30X5V★	35
1.181	1.189	.197			
30,00	*30,20*	*7,00*	*V*	*20X30X7V★	35
1.181	1.189	.276			
30,00	*30,28*	*7,00*	*S*	222025★	32
1.181	1.192	.276			
30,00	*30,28*	*7,00*	*S*	20X30X7★	35
1.181	1.192	.276			
30,80	*31,00*	*5,00*	*S*	*20X31X5★	32
1.212	1.220	.197			
31,00	*31,20*	*7,00*	*S*	*20X31X7★	32
1.220	1.228	.276			
31,80	*32,00*	*5,00*	*S*	*20X32X5★	32
1.252	1.260	.197			
31,80	*32,00*	*6,00*	*S*	*20X32X6★	32
1.252	1.260	.236			
31,80	*32,00*	*7,50*	*S*	*20X32X7.5★	32
1.252	1.260	.295			

For Illustration and Material Data See Technical Section

* The U.S. customer service number is 877-4-TIMKEN. The Canadian customer service numbers are 800-565-4927 (English) and 800-565-0438 (French-Canadian). ★ Metric Seal

20,00mm (.787") SHAFT (cont.)

Hsg. Bore	Seal O.D.	Seal Width	Lip Mat'l	Part No.	Type/ Illus.
31,80	32,00	8,00	S	*20X32X8★	32
1.252	1.260	.315			
31,80	32,00	10,00	S	*20X32X10★	32
1.252	1.260	.394			
32,00	32,21	5,00	N	710450★	32
1.260	1.268	.197			
32,00	32,23	7,00	S	222020★	35
1.260	1.269	.276			
32,00	32,23	7,00	S	20X32X7★	32
1.260	1.269	.276			
32,80	33,00	7,00	S	*20X33X7★	32
1.291	1.299	.276			
32,80	33,00	10,00	S	*20X33X10★	32
1.291	1.299	.394			
33,80	34,00	7,00	S	*20X34X7★	32
1.331	1.339	.276			
34,00	34,25	7,00	S	222028★⬅	32
1.339	1.348	.276			
34,80	35,00	6,00	S	*20X35X6★	32
1.370	1.378	.236			
34,80	35,00	8,00	S	*20X35X8★	32
1.370	1.378	.315			
34,80	35,00	10,00	S	*20X35X10★	32
1.370	1.378	.394			
35,00	35,20	7,00	V	*710280★	32
1.378	1.386	.276			
35,00	35,23	5,50	S	222030★➡	32
1.378	1.387	.217			
35,00	35,23	7,00	S	20X35X7★	32
1.378	1.387	.276			
35,80	36,00	8,00	S	*20X36X8★	32
1.409	1.417	.315			
35,80	36,00	10,00	S	*20X36X10★	32
1.409	1.417	.394			
35,80	36,00	12,00	S	*20X36X12★	32
1.409	1.417	.472			
36,00	36,20	7,00	S	20X36X7★	32
1.417	1.425	.276			
36,00	36,20	7,00	V	222036★	32
1.417	1.425	.276			
36,80	37,00	6,00	S	*20X37X6★	32
1.449	1.457	.236			
36,80	37,00	10,00	S	*20X37X10★	32
1.449	1.457	.394			
37,00	37,20	7,00	S	20X37X7★	32
1.457	1.465	.276			
37,00	37,20	8,00	S	20X37X8★	32
1.457	1.465	.315			
37,50	37,70	7,00	S	*20X37.7X7★	32
1.476	1.484	.276			
37,80	38,00	5,00	S	*20X38X5★	32
1.488	1.496	.197			
37,80	38,00	8,00	S	*20X38X8★	32
1.488	1.496	.315			
37,80	38,00	10,00	S	*20X38X10★	32
1.488	1.496	.394			
38,00	38,20	7,00	S	20X38X7★	32
1.496	1.504	.276			
38,80	39,00	6,00	S	*20X39X6★	32
1.527	1.535	.236			
39,60	39,80	6,50	S	*20X39.8X6.5★	32
1.559	1.567	.256			
39,80	40,00	8,00	S	*20X40X8★	32
1.567	1.575	.315			
39,80	40,00	9,00	S	*20X40X9★	32
1.567	1.575	.354			
39,80	40,00	12,00	S	*20X40X12★	32
1.567	1.575	.472			
40,00	40,20	7,00	V	*20X40X7V★	32
1.575	1.583	.276			
40,00	40,23	7,00	S	222050★	35
1.575	1.584	.276			

20,00mm (.787") SHAFT (cont.)

Hsg. Bore	Seal O.D.	Seal Width	Lip Mat'l	Part No.	Type/ Illus.
40,00	40,23	7,00	S	20X40X7★	32
1.575	1.584	.276			
40,00	40,23	10,00	S	20X40X10★	35
1.575	1.584	.394			
41,05	41,25	7,00	S	*20X41.25X7★	32
1.616	1.624	.276			
41,80	42,00	6,00	S	*20X42X6★	32
1.646	1.654	.236			
41,80	42,00	8,00	S	*20X42X8★	32
1.646	1.654	.315			
42,00	42,15	10,00	S	20X42X10★	45
1.654	1.659	.394			
42,00	42,25	7,00	S	20X42X7★	32
1.654	1.663	.276			
42,00	42,25	7,00	V	*20X42X7V★	35
1.654	1.663	.276			
43,80	44,00	7,00	S	*20X44X7★	32
1.724	1.732	.276			
44,80	45,00	7,00	S	*20X45X7★	32
1.764	1.772	.276			
44,80	45,00	8,00	S	*20X45X8★	32
1.764	1.772	.315			
44,80	45,00	10,00	S	*20X45X10★	32
1.764	1.772	.394			
44,80	45,00	12,00	S	*20X45X12★	32
1.764	1.772	.472			
45,80	46,00	8,00	S	*20X46X8★	32
1.803	1.811	.315			
46,00	46,20	7,00	S	*20X46X7★	32
1.811	1.819	.276			
46,80	47,00	6,00	S	*20X47X6★	32
1.842	1.850	.236			
46,80	47,00	8,00	S	*20X47X8★	32
1.842	1.850	.315			
46,80	47,00	9,00	S	*20X47X9★	32
1.842	1.850	.354			
46,80	47,00	10,00	S	*20X47X10★	32
1.842	1.850	.394			
46,80	47,00	12,00	S	*20X47X12★	32
1.842	1.850	.472			
46,80	47,00	13,00	S	*20X47X13★	32
1.842	1.850	.512			
47,00	47,20	7,00	V	*20X47X7V★	35
1.850	1.858	.276			
47,00	47,20	7,00	S	222060★	35
1.850	1.858	.276			
47,00	47,20	8,50	S	710342★➡	32
1.850	1.858	.335			
47,00	47,22	7,00	S	20X47X7★	32
1.850	1.859	.276			
47,80	48,00	8,00	S	*20X48X8★	32
1.882	1.890	.315			
47,80	48,00	10,00	S	*20X48X10★	32
1.882	1.890	.394			
48,00	48,20	7,00	S	*20X48X7★	32
1.890	1.898	.276			
48,80	49,00	7,00	S	*20X49X7★	32
1.921	1.929	.276			
49,80	50,00	8,00	S	*20X50X8★	32
1.961	1.969	.315			
49,80	50,00	10,00	S	*20X50X10★	32
1.961	1.969	.394			
50,00	50,20	7,00	S	*20X50X7★	32
1.969	1.976	.276			
51,75	52,00	8,00	S	*20X52X8★	32
2.037	2.047	.315			
51,75	52,00	9,00	S	*20X52X9★	32
2.037	2.047	.354			
51,75	52,00	10,00	S	*20X52X10★	32
2.037	2.047	.394			
51,75	52,00	12,00	S	*20X52X12★	32
2.037	2.047	.472			

For Illustration and Material Data See Technical Section

➡ Hydrodynamic Lip Design-CW ⬅ Hydrodynamic Lip Design-CCW

* The U.S. customer service number is 877-4-TIMKEN. The Canadian customer service numbers are 800-565-4927 (English) and 800-565-0438 (French-Canadian). ★ Metric Seal

Hsg. Bore	Seal O.D.	Seal Width	Lip Mat'l	Part No.	Type/ Illus.
20,00mm (.787") SHAFT (cont.)					
52,00	*52,20*	*7,00*	*S*	20X52X7★	32
2.047	2.055	.276			
.796" SHAFT					
–	–	–	S	800200	VRS1
–	–	–	V	800204	VRS1
1.250	1.254	.375	S	∗451470	45
1.499	1.503	.625	S	6357S	92
.812" (13/16") SHAFT					
–	–	–	S	800200	VRS1
–	–	–	V	800204	VRS1
1.250	**1.254**	**.250**	**S**	**471539**	**47**
1.250	1.254	.250	S	∗481539	48
1.250	1.254	.254	S	8609	47
1.250	1.254	.375	S	450431	45
1.312	**1.316**	**.250**	**S**	**480889**	**48**
1.312	1.316	.250	H	∗480889H	48
1.367	1.372	.312	S	∗252317	25
1.375	1.379	.250	S	∗480673	48
1.375	1.379	.312	V	471231V	47
1.375	**1.379**	**.312**	**S**	**471231**	**47**
1.375	1.379	.406	S	∗450204	45
1.375	1.379	.406	N	∗450204N	45
1.375	1.379	.406	S	470204	47
1.375	1.379	.406	S	∗480204	48
1.375	1.381	.250	S	353131	35
1.499	**1.503**	**.250**	**S**	**474253**	**47**
1.499	1.503	.312	S	∗450592	45
1.499	1.503	.312	N	∗450592N	45
1.499	1.503	.312	S	470592	47
1.499	1.503	.390	S	450030	45
1.499	1.503	.390	N	∗450030N	45
1.499	1.503	.390	S	∗480030	48
1.561	1.565	.375	S	∗450515	45
1.561	1.565	.375	S	470515	47
1.561	1.565	.375	S	∗480515	48
1.575	**1.579**	**.375**	**S**	**450588**	**45**
1.575	1.579	.375	S	470588	47
1.624	**1.628**	**.250**	**S**	**471645**	**47**
1.624	**1.628**	**.250**	**V**	**471645V**	**47**
1.624	1.628	.437	S	∗450213	45
1.624	1.628	.437	S	∗480213	48
1.750	1.754	.312	S	∗472650	47
1.752	1.756	.250	S	471686	47
1.752	1.756	.437	S	∗450224	45
1.752	1.756	.437	S	∗480224	48
1.828	1.832	.375	S	473412	47
1.828	1.832	.437	S	∗450035	45
1.828	1.832	.437	S	∗480035	48
1.874	1.878	.250	S	471729	47
1.874	1.878	.437	S	∗450591	45
1.874	1.878	.437	S	∗480591	48
2.441	**2.445**	**.375**	**S**	**472950**	**47**
21,00mm (.827") SHAFT					
–	–	–	S	800200	VRS1
–	–	–	V	800204	VRS1
30,80	*31,00*	*7,00*	*S*	∗21X31X7★	32
1.212	1.220	.276			
31,80	*32,00*	*5,00*	*S*	∗21X32X5★	32
1.252	1.260	.197			
32,80	*33,00*	*7,00*	*S*	∗21X33X7★	32
1.291	1.299	.276			
35,00	*35,20*	*7,00*	*S*	21X35X7★	32
1.378	1.386	.276			
35,00	*35,20*	*8,00*	*S*	21X35X8★	32
1.378	1.386	.315			
36,00	*36,20*	*8,00*	*S*	∗21X36X8★	32
1.417	1.425	.315			
21,00mm (.827") SHAFT (cont.)					
36,80	*37,00*	*5,50*	*S*	∗21X37X5.5★	32
1.449	1.457	.217			
36,80	*37,00*	*7,00*	*S*	∗21X37X7★	32
1.449	1.457	.276			
37,00	*37,20*	*8,00*	*S*	∗21X37X8★	32
1.457	1.465	.315			
38,00	*38,20*	*8,00*	*S*	∗21X38X8★	32
1.496	1.504	.315			
39,80	*40,00*	*7,00*	*S*	∗21X40X7★	32
1.567	1.575	.276			
40,00	*40,20*	*8,00*	*S*	∗21X40X8★	32
1.575	1.583	.315			
52,00	*52,20*	*8,00*	*S*	∗21X52X8★	32
2.047	2.055	.315			
.843' (27/32") SHAFT					
–	–	–	S	800220	VRS1
–	–	–	V	800224	VRS1
1.374	**1.378**	**.312**	**S**	**472452**	**47**
1.499	1.503	.250	S	473413	47
1.624	1.628	.250	S	473414	47
1.828	**1.832**	**.312**	**S**	**473415**	**47**
21,50mm (.846") SHAFT					
34,80	*35,00*	*8,00*	*S*	∗21.5X35X8★	32
1.370	1.378	.315			
21,70mm (.854") SHAFT					
34,80	*35,00*	*6,50*	*S*	∗21.7X35X6.5★	32
1.370	1.378	.256			
.860" SHAFT					
–	–	–	S	800220	VRS1
–	–	–	V	800224	VRS1
–	**–**	**.250**		**∗99086**	**Redi-Sleeve**
1.437	1.441	.250	N	482069N	48
.864" SHAFT					
–	–	–	S	800220	VRS1
–	–	–	V	800224	VRS1
–	**–**	**.315**		**99085**	**Redi-Sleeve**
1.375	1.379	.250	S	∗472065	47
1.375	1.379	.250	N	∗472065N	47
22,00mm (.866") SHAFT					
–	–	–	S	800220	VRS1
–	–	–	V	800224	VRS1
–	**–**	**.315**		**99085**	**Redi-Sleeve**
28,00	*28,20*	*8,00*	*S*	∗22X28X8★	32
1.102	1.110	.315			
29,80	*30,00*	*7,00*	*S*	∗22X30X7★	32
1.173	1.181	.276			
29,80	*30,00*	*8,00*	*S*	∗22X30X8★	32
1.173	1.181	.315			
30,80	*31,00*	*7,00*	*S*	∗22X31X7★	32
1.212	1.220	.276			
31,00	*31,20*	*6,00*	*S*	22X31X6★	32
1.220	1.228	.236			
31,00	*31,20*	*8,00*	*S*	∗22X31X8★	32
1.220	1.228	.315			
31,80	*32,00*	*5,00*	*S*	∗22X32X5★	32
1.252	1.260	.197			
31,80	*32,00*	*6,00*	*S*	∗22X32X6★	32
1.252	1.260	.236			

For Illustration and Material Data See Technical Section

∗ The U.S. customer service number is 877-4-TIMKEN. The Canadian customer service numbers are 800-565-4927 (English) and 800-565-0438 (French-Canadian). ★ Metric Seal

22,00mm (.866") SHAFT (cont.)

Hsg. Bore	Seal O.D.	Seal Width	Lip Mat'l	Part No.	Type/ Illus.
32,00	32,20	7,00	V	*22X32X7V★	35
1.260	1.268	.276			
32,00	32,23	7,00	S	222210★	35
1.260	1.269	.276			
32,00	32,23	7,00	S	22X32X7★	32
1.260	1.269	.276			
32,80	33,00	7,00	S	*22X33X7★	32
1.291	1.299	.276			
32,80	33,00	10,00	S	*22X33X10★	32
1.291	1.299	.394			
33,80	34,00	7,00	S	*22X34X7★	32
1.331	1.339	.276			
34,80	35,00	5,00	S	*22X35X5★	32
1.370	1.378	.197			
34,80	35,00	8,00	S	*22X35X8★	32
1.370	1.378	.315			
34,80	35,00	9,00	S	*22X35X9★	32
1.370	1.378	.354			
34,80	35,00	10,00	S	*22X35X10★	32
1.370	1.378	.394			
35,00	35,20	7,00	V	*22X35X7V★	35
1.378	1.386	.276			
35,00	35,23	7,00	S	222220★	32
1.378	1.387	.276			
35,00	35,23	7,00	S	22X35X7★	32
1.378	1.387	.276			
35,80	36,00	8,00	S	*22X36X8★	32
1.409	1.417	.315			
35,80	36,00	10,00	S	*22X36X10★	32
1.409	1.417	.394			
36,00	36,20	7,00	S	22X36X7★	32
1.417	1.425	.276			
36,80	37,00	6,00	S	*22X37X6★	32
1.449	1.457	.236			
37,00	37,23	7,00	S	22X37X7★	35
1.457	1.466	.276			
38,00	38,20	7,00	S	22X38X7★	35
1.496	1.504	.276			
38,00	38,20	7,00	V	*22X38X7V★	35
1.496	1.504	.276			
38,00	38,20	8,00	S	22X38X8★	32
1.496	1.504	.315			
38,00	38,20	8,00	S	222238★	32
1.496	1.504	.315			
38,80	39,00	7,00	S	*22X39X7★	32
1.527	1.535	.276			
39,80	40,00	4,00	S	*22X40X4★	32
1.567	1.575	.157			
39,80	40,00	10,00	S	*22X40X10★	32
1.567	1.575	.394			
39,80	40,00	11,00	S	*22X40X11★	32
1.567	1.575	.433			
39,80	40,00	12,00	S	*22X40X12★	32
1.567	1.575	.472			
40,00	40,18	16,00	S	*1163★	#
1.575	1.582	.630			
40,00	40,20	7,00	V	*22X40X7V★	32
1.575	1.583	.276			
40,00	40,20	8,00	S	22X40X8★	35
1.575	1.583	.315			
40,00	40,23	7,00	S	22X40X7★	32
1.575	1.584	.276			
40,00	40,23	7,00	S	222240★	35
1.575	1.584	.276			
40,00	40,23	12,00	N	222242★	32
1.575	1.584	.472			
40,00	40,34	7,75	N	1963★➡	35
1.575	1.588	.305			
41,05	41,25	6,00	S	*22X41.25X6★	32
1.616	1.624	.236			
41,30	41,50	6,00	S	*22X41.5X6★	32
1.626	1.634	.236			

22,00mm (.866") SHAFT (cont.)

Hsg. Bore	Seal O.D.	Seal Width	Lip Mat'l	Part No.	Type/ Illus.
41,80	42,00	6,00	S	*22X42X6★	32
1.646	1.654	.236			
41,80	42,00	11,00	S	*22X42X11★	32
1.646	1.654	.433			
42,00	42,20	7,00	S	22X42X7★	32
1.654	1.661	.276			
42,00	42,20	10,00	S	22X42X10★	35
1.654	1.661	.394			
43,80	44,00	7,00	S	*22X44X7★	32
1.724	1.732	.276			
44,80	45,00	5,00	S	*22X45X5★	32
1.764	1.772	.197			
44,80	45,00	8,00	S	*22X45X8★	32
1.764	1.772	.315			
44,80	45,00	10,00	S	*22X45X10★	32
1.764	1.772	.394			
45,00	45,20	8,00	H	222267★⬅	32
1.772	1.780	.315			
45,00	45,23	7,00	S	22X45X7★	35
1.772	1.781	.276			
46,00	46,20	8,00	S	*22X46X8★	32
1.811	1.819	.315			
46,80	47,00	10,00	S	*22X47X10★	32
1.842	1.850	.394			
47,00	47,23	7,00	S	222270★	35
1.850	1.859	.276			
47,00	47,23	7,00	S	22X47X7★	32
1.850	1.859	.276			
47,80	48,00	7,00	S	*22X48X7★	32
1.882	1.890	.276			
47,80	48,00	11,00	S	*22X48X11★	32
1.882	1.890	.433			
48,00	48,20	8,00	S	*22X48X8★	32
1.890	1.898	.315			
49,80	50,00	5,00	S	*22X50X5★	32
1.961	1.969	.197			
49,80	50,00	10,00	S	*22X50X10★	32
1.961	1.969	.394			
50,00	50,20	8,00	S	*22X50X8★	32
1.969	1.976	.315			
51,75	52,00	10,00	S	*22X52X10★	32
2.037	2.047	.394			
52,00	52,20	8,00	S	*22X52X8★	32
2.047	2.055	.315			
55,75	56,00	7,00	S	*22X56X7★	32
2.195	2.205	.276			

.875" (7/8") SHAFT

–	–	–	S	800220	VRS1
–	–	–	V	800224	VRS1
–	**–**	**.313**		**99087**	**Redi-Sleeve**
1.124	1.135	.125	S	240733	24
1.187	1.191	.185	S	*442168	44
1.187	1.193	.187	S	340850	34
1.245	1.256	.187	S	5976S	34
1.249	1.254	.187	S	7840S	31
1.250	1.254	.250	S	42280S	4S
1.250	**1.255**	**.250**	**S**	**254287**	**25**
1.250	1.255	.250	V	*254287V	25
1.250	1.256	.250	S	340483	34
1.254	1.260	.205	S	7014S	4S
1.260	1.265	.250	V	*250861V	25
1.308	1.314	.250	S	353132	35
1.308	1.316	.250	S	340413	34
1.374	1.378	.406	S	470398	47
1.374	1.379	.406	S	*410398	41
1.374	1.379	.406	S	*450398	45
1.375	1.379	.187	S	440131	44
1.375	1.379	.250	S	*441267	44
1.375	1.379	.250	S	41267S	4S
1.375	**1.379**	**.250**	**S**	**471267**	**47**

For Illustration and Material Data See Technical Section

Designed For A Specific Application - Not Recommended For General Use ➡ Hydrodynamic Lip Design-CW ⬅ Hydrodynamic Lip Design-CCW

* The U.S. customer service number is 877-4-TIMKEN. The Canadian customer service numbers are 800-565-4927 (English) and 800-565-0438 (French-Canadian). ★ Metric Seal

.875" (7/8") SHAFT (cont.)

Hsg. Bore	Seal O.D.	Seal Width	Lip Mat'l	Part No.	Type/ Illus.
1.375	1.379	.250	A	471267A	47
1.375	1.379	.250	H	*471267H	47
1.375	1.379	.250	T	*471267T	47
1.375	**1.379**	**.250**	**V**	**471267V**	**47**
1.375	1.379	.250	S	*481267	48
1.375	1.379	.250	H	*481267H	48
1.375	1.379	.250	N	*481267N	48
1.375	1.379	.250	V	712015	#
1.375	1.379	.312	T	38832➡	94
1.375	1.379	.312	S	*410567	41
1.375	1.379	.312	S	*450567	45
1.375	1.379	.312	H	*450567H	45
1.375	1.379	.312	N	*450567N	45
1.375	1.379	.312	V	*450567V	45
1.375	1.379	.312	S	470567	47
1.375	1.379	.312	H	*470567H	47
1.375	1.379	.312	N	470567N	47
1.375	1.379	.312	V	*470567V	47
1.375	1.379	.312	S	*480567	48
1.375	1.379	.312	N	*480567N	48
1.375	1.379	.375	V	*712147	43
1.375	1.381	.250	S	321267	32
1.375	1.381	.250	S	351267	35
1.375	1.383	.312	S	*320567	32
1.375	1.385	.312	S	350567	35
1.436	1.441	.256	S	712270	48
1.499	1.503	.250	S	*40032S	4S
1.499	**1.503**	**.250**	**S**	**471570**	**47**
1.499	**1.503**	**.250**	**V**	**471570V**	**47**
1.499	1.503	.250	S	*481570	48
1.499	1.503	.250	V	*481570V	48
1.499	1.503	.312	S	*410680	41
1.499	1.503	.312	N	*410680N	41
1.499	1.503	.312	S	*450680	45
1.499	1.503	.312	H	*450680H	45
1.499	1.503	.312	V	*450680V	45
1.499	1.503	.312	S	470680	47
1.499	1.503	.312	S	*480680	48
1.499	1.503	.390	S	*410032	41
1.499	1.503	.390	S	*450032	45
1.499	1.503	.390	N	*450032N	45
1.499	1.503	.390	S	470032	47
1.499	1.503	.390	S	*480032	48
1.573	1.577	.250	N	*483011N	48
1.575	1.579	.250	S	*470877	47
1.575	1.579	.375	S	*410781	41
1.575	1.579	.375	S	*450781	45
1.575	1.581	.250	S	350877	35
1.575	1.584	.669	N	*4026	#
1.575	1.750	.281	F	*6385	29
1.577	**1.581**	**.250**	**S**	**471633**	**47**
1.577	1.581	.250	N	*471633N	47
1.577	1.581	.250	S	*481633	48
1.624	**1.628**	**.250**	**S**	**471646**	**47**
1.624	1.628	.250	S	*481646	48
1.624	1.628	.312	S	*411659	41
1.624	1.628	.312	S	*451659	45
1.624	1.628	.312	S	*471659	47
1.624	1.628	.312	S	*481659	48
1.624	1.628	.437	S	*410215	41
1.624	1.628	.437	S	*450215	45
1.624	1.628	.437	S	470215	47
1.624	1.628	.437	S	*480215	48
1.624	1.630	.250	S	351646	35
1.624	1.634	.187	S	240215	24
1.689	1.690	.250	S	*481674	48
1.750	1.754	.312	V	*473285V	47
1.752	**1.756**	**.250**	**S**	**470590**	**47**
1.752	1.756	.250	S	*480590	48
1.752	1.756	.312	S	*411700	41
1.752	1.756	.312	S	*451700	45
1.752	1.756	.312	S	*471700	47

.875" (7/8") SHAFT (cont.)

Hsg. Bore	Seal O.D.	Seal Width	Lip Mat'l	Part No.	Type/ Illus.
1.752	1.756	.312	S	*481700	48
1.752	1.756	.437	S	*450226	45
1.752	1.756	.437	S	*470226	47
1.752	1.756	.437	S	*480226	48
1.828	**1.832**	**.375**	**S**	**471137**	**47**
1.828	1.832	.375	S	*481137	48
1.828	1.832	.437	S	*410037	41
1.828	1.832	.437	S	*450037	45
1.828	1.832	.437	N	*450037N	45
1.828	1.832	.437	S	*470037	47
1.828	1.832	.437	S	*480037	48
1.874	**1.878**	**.250**	**S**	**471730**	**47**
1.874	1.878	.250	H	*481730H	48
1.874	1.878	.437	S	*410424	41
1.874	1.878	.437	S	*450424	45
1.874	1.878	.437	S	*470424	47
1.874	1.878	.437	S	*480424	48
1.874	1.878	.437	N	*480424N	48
1.983	1.987	.250	S	*481741	48
2.000	2.004	.437	S	*450645	45
2.000	2.004	.437	S	470645	47

23,00mm (.905") SHAFT

–	–	–	S	800220	VRS1
–	–	–	V	800224	VRS1
31,80	*32,00*	*5,50*	*S*	710254★	34
1.252	1.260	.217			
32,00	*32,20*	*5,00*	*S*	222310★	34
1.260	1.268	.197			
34,00	*34,23*	*6,50*	*S*	710155★	35
1.339	1.348	.256			
34,00	*34,23*	*8,00*	*N*	222330★⬅	32
1.339	1.348	.315			
40,00	*40,23*	*7,00*	*N*	222340★➡	32
1.575	1.584	.276			

.906" (29/32") SHAFT

–	–	–	S	800220	VRS1
–	–	–	V	800224	VRS1

23,00mm (.906") SHAFT

31,80	*32,00*	*7,00*	*S*	*23X32X7★	32
1.252	1.260	.276			
34,80	*35,00*	*7,00*	*S*	*23X35X7★	32
1.370	1.378	.276			
35,80	*36,00*	*6,00*	*S*	*23X36X6★	32
1.409	1.417	.236			
35,80	*36,00*	*7,00*	*S*	*23X36X7★	32
1.409	1.417	.276			
35,80	*36,00*	*10,00*	*S*	*23X36X10★	32
1.409	1.417	.394			
35,80	*36,00*	*13,00*	*S*	*23X36X13★	32
1.409	1.417	.512			
36,80	*37,00*	*7,00*	*S*	*23X37X7★	32
1.449	1.457	.276			
37,80	*38,00*	*7,00*	*S*	*23X38X7★	32
1.488	1.496	.276			

.906" (29/32") SHAFT

1.499	**1.503**	**.390**	**S**	**470207**	**47**

23,00mm (.906") SHAFT

39,80	*40,00*	*6,00*	*S*	*23X40X6★	32
1.567	1.575	.236			
39,80	*40,00*	*10,00*	*S*	*23X40X10★	32
1.567	1.575	.394			

For Illustration and Material Data See Technical Section

Designed For A Specific Application - Not Recommended For General Use ➡ Hydrodynamic Lip Design-CW ⬅ Hydrodynamic Lip Design-CCW

* The U.S. customer service number is 877-4-TIMKEN. The Canadian customer service numbers are 800-565-4927 (English) and 800-565-0438 (French-Canadian). ★ Metric Seal

Hsg. Bore	Seal O.D.	Seal Width	Lip Mat'l	Part No.	Type/ Illus.
.906" (29/32") SHAFT					
1.625	1.629	.312	S	*482371	48
23,00mm (.906") SHAFT					
41,80	*42,00*	*7,00*	*S*	*23X42X7★	32
1.646	1.654	.276			
42,80	*43,00*	*8,00*	*S*	*23X43X8★	32
1.685	1.693	.315			
.906" (29/32") SHAFT					
1.828	1.832	.437	S	450038	45
23,00mm (.906") SHAFT					
46,80	*47,00*	*7,00*	*S*	*23X47X7★	32
1.842	1.850	.276			
46,80	*47,00*	*8,00*	*S*	*23X47X8★	32
1.842	1.850	.315			
46,80	*47,00*	*10,00*	*S*	*23X47X10★	32
1.842	1.850	.394			
.937" (15/16") SHAFT					
–	–	–	S	800220	VRS1
–	–	–	V	800224	VRS1
1.375	**1.379**	**.312**	**S**	**471015**	**47**
1.375	1.383	.250	S	340787	34
1.375	1.383	.250	N	*340787N	34
1.497	1.501	.390	S	*481047	48
1.499	1.503	.250	V	471571V	47
1.499	**1.503**	**.250**	**S**	**471571**	**47**
1.499	**1.503**	**.250**	**V**	**471571V**	**47**
1.499	1.503	.250	S	*481571	48
1.499	1.503	.250	V	481571V	48
1.499	1.503	.390	S	*450184	45
1.499	1.503	.390	S	*480184	48
1.499	1.504	.312	S	*411582	41
1.499	1.504	.312	S	*451582	45
1.499	1.504	.312	S	*481582	48
1.624	**1.628**	**.250**	**S**	**471647**	**47**
1.624	1.628	.250	S	*481647	48
1.624	1.628	.312	S	*451660	45
1.624	1.628	.312	S	*471660	47
1.624	1.628	.437	S	*450217	45
1.624	1.628	.437	V	*450217V	45
1.624	1.628	.437	S	*480217	48
1.750	1.754	.312	S	472951	47
1.752	**1.756**	**.250**	**S**	**474252**	**47**
1.752	1.756	.312	S	*451701	45
1.752	1.756	.437	S	*450228	45
1.752	1.756	.437	S	*480228	48
1.828	**1.832**	**.437**	**S**	**450039**	**45**
1.828	1.832	.437	S	470039	47
1.828	1.832	.437	S	*480039	48
1.850	1.854	.312	S	474235	47
24,00mm (.945") SHAFT					
–	–	–	S	800220	VRS1
–	–	–	V	800224	VRS1
31,80	*32,00*	*4,00*	*S*	*24X32X4★	32
1.252	1.260	.157			
31,80	*32,00*	*7,00*	*S*	*24X32X7★	32
1.252	1.260	.276			
32,80	*33,00*	*7,00*	*S*	*24X33X7★	32
1.291	1.299	.276			
33,80	*34,00*	*7,00*	*S*	*24X34X7★	32
1.331	1.339	.276			
34,80	*35,00*	*6,00*	*S*	*24X35X6★	32
1.370	1.378	.236			
34,80	*35,00*	*8,00*	*S*	*24X35X8★	32
1.370	1.378	.315			
24,00mm (.945") SHAFT (cont.)					
35,00	*35,23*	*7,00*	*S*	222410★	35
1.378	1.387	.276			
35,00	*35,23*	*7,00*	*S*	24X35X7★	32
1.378	1.387	.276			
35,80	*36,00*	*7,00*	*S*	*24X36X7★	32
1.409	1.417	.276			
35,80	*36,00*	*8,00*	*S*	*24X36X8★	32
1.409	1.417	.315			
36,00	*36,20*	*7,00*	*V*	*24X36X7V★	35
1.417	1.425	.276			
37,00	*37,23*	*7,00*	*S*	24X37X7★	35
1.457	1.466	.276			
37,80	*38,00*	*8,00*	*S*	*24X38X8★	32
1.488	1.496	.315			
37,80	*38,00*	*8,50*	*S*	*24X38X8.5★	32
1.488	1.496	.335			
37,80	*38,00*	*10,00*	*S*	*24X38X10★	32
1.488	1.496	.394			
38,00	*38,20*	*7,00*	*S*	24X38X7★	32
1.496	1.504	.276			
39,80	*40,00*	*8,00*	*S*	*24X40X8★	32
1.567	1.575	.315			
40,00	*40,20*	*6,00*	*V*	*24X40X6V★	35
1.575	1.583	.236			
40,00	*40,23*	*7,00*	*S*	222430★	35
1.575	1.584	.276			
40,00	*40,23*	*7,00*	*S*	24X40X7★	32
1.575	1.584	.276			
42,00	*42,20*	*7,00*	*S*	24X42X7★	32
1.654	1.661	.276			
42,00	*42,25*	*8,00*	*S*	*24X42X8★	35
1.654	1.663	.315			
42,00	*42,25*	*10,00*	*S*	24X42X10★	32
1.654	1.663	.394			
42,80	*43,00*	*6,00*	*S*	*24X43X6★	32
1.685	1.693	.236			
42,80	*43,00*	*7,00*	*S*	*24X43X7★	32
1.685	1.693	.276			
43,00	*43,23*	*8,00*	*S*	222450★	25
1.693	1.702	.315			
44,80	*45,00*	*6,00*	*S*	*24X45X6★	32
1.764	1.772	.236			
44,80	*45,00*	*7,00*	*S*	*24X45X7★	32
1.764	1.772	.276			
44,80	*45,00*	*11,00*	*S*	*24X45X11★	32
1.764	1.772	.433			
45,00	*45,20*	*8,00*	*S*	*24X45X8★	32
1.772	1.780	.315			
45,80	*46,00*	*10,00*	*S*	*24X46X10★	32
1.803	1.811	.394			
46,00	*46,20*	*8,00*	*S*	*24X46X8★	32
1.811	1.819	.315			
46,80	*47,00*	*10,00*	*S*	*24X47X10★	32
1.842	1.850	.394			
47,00	*47,23*	*7,00*	*S*	24X47X7★	32
1.850	1.859	.276			
47,80	*48,00*	*7,00*	*S*	*24X48X7★	32
1.882	1.890	.276			
48,00	*48,20*	*8,00*	*S*	*24X48X8★	32
1.890	1.898	.315			
48,80	*49,00*	*12,00*	*S*	*24X49X12★	32
1.921	1.929	.472			
50,00	*50,20*	*8,00*	*S*	*24X50X8★	32
1.969	1.976	.315			
52,00	*52,20*	*7,00*	*S*	24X52X7★	32
2.047	2.055	.276			
76,72	*77,00*	*18,00*	*S*	*24X77X18★	32
3.020	3.031	.709			
.968" (31/32") SHAFT					
–	–	–	S	800250	VRS1

For Illustration and Material Data See Technical Section

* The U.S. customer service number is 877-4-TIMKEN. The Canadian customer service numbers are 800-565-4927 (English) and 800-565-0438 (French-Canadian). ★ Metric Seal

Hsg. Bore	Seal O.D.	Seal Width	Lip Mat'l	Part No.	Type/ Illus.
.968" (31/32") SHAFT (cont.)					
–	–	–	S	800251	VRS2
–	–	–	V	800254	VRS1
–	**–**	**.313**		**99094**	**Redi-Sleeve**
–	**–**	**.625**		**99096**	**Redi-Sleeve**
1.499	1.503	.250	L	40208	4L
1.499	1.503	.250	S	*481572	48
1.499	1.503	.250	V	*481572V	48
1.499	1.503	.312	V	451583V	45
1.499	**1.503**	**.312**	**S**	**451583**	**45**
1.499	1.503	.312	S	*481583	48
1.499	1.503	.390	S	*450208	45
1.499	1.503	.390	S	*480208	48
1.500	1.507	.187	S	6324S	34
1.575	1.579	.375	S	450545	45
1.624	**1.628**	**.250**	**S**	**471648**	**47**
1.624	1.628	.250	S	*481648	48
1.624	1.628	.437	S	*450218	45
1.624	1.628	.437	N	*450218N	45
1.686	1.690	.312	S	8059S	25
1.750	1.754	.375	S	*452582	45
1.750	1.754	.375	S	*482582	48
1.750	1.754	.437	S	*452132	45
1.752	**1.756**	**.250**	**S**	**471688**	**47**
1.752	1.756	.250	S	*481688	48
1.752	1.756	.250	N	*481688N	48
1.752	1.756	.312	S	*471702	47
1.752	1.756	.312	S	*481702	48
1.752	1.756	.437	S	*450229	45
1.828	1.832	.437	S	*410040	41
1.828	**1.832**	**.437**	**S**	**450040**	**45**
1.828	1.832	.437	S	*480040	48
1.850	1.854	.312	S	*482090	48
1.850	**1.854**	**.375**	**S**	**482309**	**48**
1.874	**1.878**	**.437**	**S**	**451082**	**45**
2.048	**2.052**	**.375**	**S**	**482310**	**48**
2.062	**2.066**	**.437**	**S**	**450339**	**45**
2.062	2.066	.437	N	*450339N	45
2.440	**2.445**	**.375**	**S**	**472238**	**47**
.975" SHAFT					
–	–	–	S	800250	VRS1
–	–	–	S	800251	VRS2
–	–	–	V	800254	VRS1
1.874	1.878	.437	S	*452573	45
25,00mm (.984") SHAFT					
–	–	–	S	800250	VRS1
–	–	–	S	800251	VRS2
–	–	–	V	800254	VRS1
–	**–**	**.313**		**99098**	**Redi-Sleeve**
31,80	*32,00*	*4,00*	*S*	*25X32X4★	32
1.252	1.260	.157			
31,80	*32,00*	*6,00*	*S*	*25X32X6★	32
1.252	1.260	.236			
31,80	*32,00*	*7,00*	*S*	*25X32X7★	32
1.252	1.260	.276			
32,80	*33,00*	*6,00*	*S*	*25X33X6★	32
1.291	1.299	.236			
33,80	*34,00*	*5,00*	*S*	*25X34X5★	32
1.331	1.339	.197			
34,80	*35,00*	*5,00*	*S*	*25X35X5★	32
1.370	1.378	.197			
34,80	*35,00*	*8,00*	*S*	*25X35X8★	32
1.370	1.378	.315			
34,80	*35,00*	*8,50*	*S*	*25X35X8.5★	32
1.370	1.378	.335			
34,80	*35,00*	*9,00*	*S*	*25X35X9★	32
1.370	1.378	.354			
25,00mm (.984") SHAFT (cont.)					
34,80	*35,00*	*10,00*	*S*	*25X35X10★	32
1.370	1.378	.394			
35,00	*35,10*	*7,00*	*V*	*25X35X7V★	48
1.378	1.382	.276			
35,00	*35,20*	*6,00*	*S*	25X35X6★	32
1.378	1.386	.236			
35,00	*35,25*	*7,00*	*S*	25X35X7★	35
1.378	1.388	.276			
35,00	*35,25*	*7,00*	*S*	222510★	35
1.378	1.388	.276			
35,00	*35,25*	*7,00*	*V*	712007★	32
1.378	1.388	.276			
35,80	*36,00*	*6,00*	*S*	*25X36X6★	32
1.409	1.417	.236			
36,00	*36,23*	*7,00*	*S*	25X36X7★	32
1.417	1.426	.276			
36,00	*36,22*	*8,00*	*S*	25X36X8★	32
1.417	1.426	.315			
36,80	*37,00*	*5,00*	*S*	*25X37X5★	32
1.449	1.457	.197			
36,80	*37,00*	*6,00*	*S*	*25X37X6★	32
1.449	1.457	.236			
36,80	*37,00*	*8,00*	*S*	*25X37X8★	32
1.449	1.457	.315			
37,00	*37,20*	*5,00*	*V*	*25X37X5V★	35
1.457	1.465	.197			
37,00	*37,20*	*7,00*	*S*	25X37X7★	32
1.457	1.465	.276			
37,00	*37,26*	*7,00*	*S*	320603★➡	32
1.457	1.467	.276			
37,80	*38,00*	*6,00*	*S*	*25X38X6★	32
1.488	1.496	.236			
37,80	*38,00*	*8,00*	*S*	*25X38X8★	32
1.488	1.496	.315			
37,80	*38,00*	*10,00*	*S*	*25X38X10★	32
1.488	1.496	.394			
38,00	*38,20*	*7,00*	*V*	*25X38X7V★	35
1.496	1.504	.276			
38,00	*38,23*	*7,00*	*S*	25X38X7★	32
1.496	1.505	.276			
38,00	*38,23*	*7,00*	*S*	222535★	32
1.496	1.505	.276			
1.499	**1.503**	**.250**	**S**	**472324**	**47**
1.499	1.503	.250	A	472324A	47
1.499	1.503	.250	H	*472324H	47
1.499	**1.503**	**.250**	**V**	**472324V**	**47**
1.499	1.504	.250	V	4458V	#
1.500	1.504	.312	S	*471171	47
1.500	1.508	.410	S	6522S	34
38,80	*39,00*	*8,00*	*S*	*25X39X8★	32
1.527	1.535	.315			
39,80	*40,00*	*5,00*	*S*	*25X40X5★	32
1.567	1.575	.197			
39,80	*40,00*	*6,00*	*S*	*25X40X6★	32
1.567	1.575	.236			
39,80	*40,00*	*6,00*	*S*	*25X40X6★	32
1.567	1.575	.236			
39,80	*40,00*	*8,00*	*S*	*25X40X8★	32
1.567	1.575	.315			
39,80	*40,00*	*10,00*	*S*	*25X40X10★	32
1.567	1.575	.394			
39,80	*40,00*	*11,00*	*S*	*25X40X11★	32
1.567	1.575	.433			
39,80	*40,00*	*12,00*	*S*	*25X40X12★	32
1.567	1.575	.472			
40,01	*40,11*	*9,50*	*V*	450908V★	45
1.575	1.579	.374			
40,00	*40,10*	*9,50*	*S*	*450908★	45
1.575	1.579	.374			
40,00	*40,22*	*7,00*	*S*	25X40X7★	32
1.575	1.583	.276			

For Illustration and Material Data See Technical Section
Designed For A Specific Application - Not Recommended For General Use ➡ Hydrodynamic Lip Design-CW
* The U.S. customer service number is 877-4-TIMKEN. The Canadian customer service numbers are 800-565-4927 (English) and 800-565-0438 (French-Canadian). ★ Metric Seal

25,00mm (.984") SHAFT (cont.)

Hsg. Bore	Seal O.D.	Seal Width	Lip Mat'l	Part No.	Type/ Illus.
40,00	40,20	7,00	V	*25X40X7V★	35
1.575	1.583	.276			
40,00	40,22	7,00	S	222540★	47
1.575	1.583	.276			
40,00	40,20	7,00	N	710307★⬅	32
1.575	1.583	.276			
40,00	40,20	8,00	S	710316★➡	32
1.575	1.583	.315			
40,00	40,31	8,00	S	*324151★	32
1.575	1.587	.315			
40,00	40,31	8,00	N	*324151N★	32
1.575	1.587	.315			
40,54	40,64	6,35	S	712018★	#
1.596	1.600	.250			
40,80	41,00	6,00	S	*25X41X6★	32
1.606	1.614	.236			
40,80	41,00	7,00	S	*25X41X7★	32
1.606	1.614	.276			
41,00	41,09	8,00	T	39867★⬅	W-H
1.614	1.618	.315			
41,00	41,20	8,00	S	*25X41.2X8★	32
1.614	1.622	.315			
41,05	41,25	6,00	S	*25X41.25X6★	32
1.616	1.624	.236			
41,05	41,25	7,00	S	*25X41.25X7★	32
1.616	1.624	.276			
41,25	41,35	11,10	S	*450811★	45
1.624	1.628	.437			
41,30	41,50	7,00	S	*25X41.5X7★	32
1.626	1.634	.276			
41,30	41,50	10,00	S	*25X41.5X10★	32
1.626	1.634	.394			
41,80	42,00	5,50	S	*25X42X5.5★	32
1.646	1.654	.217			
41,80	42,00	7,00	S	*25X42X7★	32
1.646	1.654	.276			
41,80	42,00	8,50	S	*25X42X8.5★	32
1.646	1.654	.335			
41,80	42,00	12,00	S	*25X42X12★	32
1.646	1.654	.472			
42,00	42,20	6,00	S	25X42X6★	32
1.654	1.661	.236			
42,00	42,20	7,00	V	*25X42X7V★	32
1.654	1.661	.276			
42,00	42,20	8,00	S	25X42X8★	32
1.654	1.661	.315			
42,00	42,30	8,00	H	222556★➡	32
1.654	1.665	.315			
42,00	42,28	10,00	S	25X42X10★	35
1.654	1.665	.394			
42,70	42,90	9,50	S	*25X42.9X9.5★	32
1.681	1.689	.374			
42,80	43,00	7,00	S	*25X43X7★	32
1.685	1.693	.276			
42,80	43,00	9,00	S	*25X43X9★	32
1.685	1.693	.354			
42,80	43,00	10,00	S	*25X43X10★	32
1.685	1.693	.394			
43,80	44,00	7,00	S	*25X44X7★	32
1.724	1.732	.276			
43,80	44,00	8,00	S	*25X44X8★	32
1.724	1.732	.315			
44,00	44,20	7,00	S	222558★	32
1.732	1.740	.276			
44,25	44,45	10,00	S	*25X44.45X10★	32
1.742	1.750	.394			
1.749	1.753	.375	V	*483027V	48
1.752	1.756	.313	V	712012	#
44,80	45,00	7,00	S	*25X45X7★	32
1.764	1.772	.276			
44,80	45,00	9,00	S	*25X45X9★	32
1.764	1.772	.354			

25,00mm (.984") SHAFT (cont.)

Hsg. Bore	Seal O.D.	Seal Width	Lip Mat'l	Part No.	Type/ Illus.
44,80	45,00	10,00	S	*25X45X10★	32
1.764	1.772	.394			
44,80	45,00	11,00	S	*25X45X11★	32
1.764	1.772	.433			
44,80	45,00	12,00	S	*25X45X12★	32
1.764	1.772	.472			
45,00	45,23	8,00	S	25X45X8★	32
1.772	1.781	.315			
46,00	46,20	7,00	S	25X46X7★	32
1.811	1.819	.276			
46,00	46,20	8,00	S	*25X46X8★	32
1.811	1.819	.315			
1.828	1.832	.437	S	450457	45
1.828	1.838	.187	S	240457	24
1.834	1.842	.250	S	*321471	32
46,80	47,00	6,00	S	*25X47X6★	32
1.842	1.850	.236			
46,80	47,00	8,00	S	*25X47X8★	32
1.842	1.850	.315			
46,80	47,00	10,00	S	*25X47X10★	32
1.842	1.850	.394			
47,00	47,10	9,50	S	*482583★	48
1.850	1.854	.374			
47,00	47,20	10,00	V	*25X47X10V★	35
1.850	1.858	.394			
47,00	47,23	7,00	S	25X47X7★	32
1.850	1.859	.276			
47,80	48,00	7,00	S	*25X48X7★	32
1.882	1.890	.276			
47,80	48,00	10,00	S	*25X48X10★	32
1.882	1.890	.394			
48,00	48,20	8,00	S	25X48X8★	32
1.890	1.898	.315			
48,80	49,00	10,00	S	*25X49X10★	32
1.921	1.929	.394			
49,80	50,00	12,00	S	*25X50X12★	32
1.961	1.969	.472			
50,00	50,20	8,00	S	25X50X8★	32
1.969	1.976	.315			
50,00	50,20	10,00	V	*25X50X10V★	35
1.969	1.976	.394			
50,00	50,28	10,00	S	25X50X10★	35
1.969	1.980	.394			
51,75	52,00	9,50	S	*25X52X9.5★	32
2.037	2.047	.374			
51,75	52,00	12,00	S	*25X52X12★	32
2.037	2.047	.472			
52,00	52,10	7,90	S	*472184★	47
2.047	2.051	.311			
52,00	52,20	7,00	V	*25X52X7V★	35
2.047	2.055	.276			
52,00	52,20	8,00	S	25X52X8★	35
2.047	2.055	.315			
52,00	52,20	10,00	S	25X52X10★	35
2.047	2.055	.394			
52,00	52,27	7,00	S	25X52X7★	32
2.047	2.058	.276			
52,37	**52,48**	**11,10**	**S**	**450693★**	**45**
2.062	**2.066**	**.437**			
52,75	53,00	10,00	S	*25X53X10★	32
2.077	2.087	.394			
54,00	54,20	8,00	S	*25X54X8★	32
2.126	2.134	.315			
54,75	55,00	10,00	S	*25X55X10★	32
2.155	2.165	.394			
54,75	55,00	12,00	S	*25X55X12★	32
2.155	2.165	.472			
55,00	55,20	8,00	S	*25X55X8★	32
2.165	2.173	.315			
56,00	56,20	8,00	S	*25X56X8★	32
2.205	2.213	.315			

For Illustration and Material Data See Technical Section

Designed For A Specific Application - Not Recommended For General Use ➡ Hydrodynamic Lip Design-CW ⬅ Hydrodynamic Lip Design-CCW

* The U.S. customer service number is 877-4-TIMKEN. The Canadian customer service numbers are 800-565-4927 (English) and 800-565-0438 (French-Canadian). ★ Metric Seal

25,00mm (.984") SHAFT (cont.)

Hsg. Bore	Seal O.D.	Seal Width	Lip Mat'l	Part No.	Type/ Illus.
57,75	*58,00*	*10,00*	*S*	*25X58X10★	32
2.273	2.283	.394			
58,00	*58,20*	*8,00*	*S*	*25X58X8★	32
2.283	2.291	.315			
59,75	*60,00*	*10,00*	*S*	*25X60X10★	32
2.352	2.362	.394			
60,00	*60,20*	*8,00*	*S*	*25X60X8★	32
2.362	2.370	.315			
61,75	*62,00*	*8,00*	*S*	*25X62X8★	32
2.431	2.441	.315			
62,00	*62,20*	*7,00*	*S*	25X62X7★	32
2.441	2.449	.276			
62,00	*62,20*	*7,00*	*V*	*25X62X7V★	35
2.441	2.449	.276			
62,00	*62,28*	*10,00*	*S*	25X62X10★	32
2.441	2.452	.394			
62,00	*62,28*	*10,00*	*S*	222580★	32
2.441	2.452	.394			
64,75	*65,00*	*10,00*	*S*	*25X65X10★	32
2.549	2.559	.394			
65,75	*66,00*	*8,50*	*S*	*25X66X8.5★	32
2.588	2.598	.335			
69,75	*70,00*	*10,00*	*S*	*25X70X10★	32
2.746	2.756	.394			
71,75	*72,00*	*8,00*	*S*	*25X72X8★	32
2.825	2.835	.315			
79,72	*80,00*	*10,00*	*S*	*25X80X10★	32
3.139	3.150	.394			

1.000" SHAFT

Hsg. Bore	Seal O.D.	Seal Width	Lip Mat'l	Part No.	Type/ Illus.
–	–	–	S	800250	VRS1
–	–	–	S	800251	VRS2
–	–	–	V	800254	VRS1
–	**–**	**.313**		**99101**	**Redi-Sleeve**
1.247	1.253	.187	S	343098	34
1.250	1.254	.536	S	6847S	#
1.250	1.260	.125	S	240731	24
1.312	1.318	.125	S	342517	34
1.322	1.328	.210	S	710059	48
1.375	1.379	.187	S	441130	44
1.375	1.379	.187	N	*441130N	44
1.375	**1.379**	**.250**	**S**	**252277**	**25**
1.375	1.379	.250	V	*252277V	25
1.375	1.379	.250	S	712026	#
1.437	1.441	.250	T	39910⬅➡	W
1.437	1.441	.250	S	42311S	4S
1.437	1.441	.250	S	330414	33
1.437	1.441	.250	N	*330414N	33
1.437	**1.441**	**.250**	**S**	**472311**	**47**
1.437	**1.441**	**.250**	**V**	**472311V**	**47**
1.437	1.445	.250	S	350414	35
1.437	1.447	.187	S	240414	24
1.499	1.503	.250	L	*40120	4L
1.499	1.503	.250	S	41224S	4S
1.499	1.503	.250	S	*451224	45
1.499	**1.503**	**.250**	**S**	**471224**	**47**
1.499	1.503	.250	A	471224A	47
1.499	1.503	.250	N	*471224N	47
1.499	**1.503**	**.250**	**V**	**471224V**	**47**
1.499	1.503	.250	S	*481224	48
1.499	1.503	.250	H	*481224H	48
1.499	1.503	.250	V	481224V	48
1.499	1.503	.250	S	712016	#
1.499	1.503	.312	F	5857	29
1.499	1.503	.312	S	*410553	41
1.499	1.503	.312	S	*450553	45
1.499	1.503	.312	H	*450553H	45
1.499	1.503	.312	S	470553	47
1.499	1.503	.312	H	*470553H	47
1.499	1.503	.312	N	*470553N	47
1.499	1.503	.312	S	*480553	48

1.000" SHAFT (cont.)

Hsg. Bore	Seal O.D.	Seal Width	Lip Mat'l	Part No.	Type/ Illus.
1.499	1.503	.312	H	*480553H	48
1.499	1.503	.390	S	*9277	48
1.499	1.503	.390	S	*410120	41
1.499	1.503	.390	N	*410120N	41
1.499	1.503	.390	S	*450120	45
1.499	1.503	.390	H	*450120H	45
1.499	1.503	.390	S	470120	47
1.499	1.503	.390	N	*470120N	47
1.499	1.503	.390	S	*480120	48
1.499	1.507	.250	S	340120	34
1.502	1.510	.312	S	350909	35
1.561	1.565	.250	V	471270V	47
1.561	**1.565**	**.250**	**S**	**471270**	**47**
1.561	1.565	.375	S	*410449	41
1.561	1.565	.375	S	*450449	45
1.561	1.565	.375	S	*470449	47
1.561	1.565	.375	S	*480449	48
1.561	1.566	.375	N	*480449N	48
1.563	1.569	.187	S	343123	34
1.575	**1.579**	**.250**	**S**	**473380**	**47**
1.575	1.579	.312	S	*471618	47
1.575	1.579	.375	S	*410818	41
1.575	1.579	.375	S	*450818	45
1.624	**1.628**	**.250**	**S**	**471649**	**47**
1.624	1.628	.250	A	471649A	47
1.624	**1.628**	**.250**	**V**	**471649V**	**47**
1.624	1.628	.250	S	*481649	48
1.624	1.628	.250	N	*481649N	48
1.624	1.628	.312	S	*411662	41
1.624	1.628	.312	S	*451662	45
1.624	1.628	.312	V	*451662V	45
1.624	1.628	.312	S	*471662	47
1.624	1.628	.312	S	*481662	48
1.624	1.628	.312	H	*481662H	48
1.624	1.628	.437	S	*410219	41
1.624	1.628	.437	N	*410219N	41
1.624	1.628	.437	S	*450219	45
1.624	1.628	.437	H	*450219H	45
1.624	1.628	.437	N	*450219N	45
1.624	1.628	.437	S	470219	47
1.624	1.628	.437	N	*470219N	47
1.624	1.628	.437	S	*480219	48
1.625	1.629	.375	S	*481239	48
1.686	**1.690**	**.250**	**S**	**474250**	**47**
1.689	1.693	.250	S	*41465S	4S
1.689	1.693	.250	S	471465	47
1.752	1.756	.250	S	40230S	4S
1.752	**1.756**	**.250**	**S**	**471689**	**47**
1.752	1.756	.250	A	471689A	47
1.752	**1.756**	**.250**	**V**	**471689V**	**47**
1.752	1.756	.250	S	*481689	48
1.752	1.756	.250	N	*481689N	48
1.752	1.756	.312	S	*411703	41
1.752	1.756	.312	N	*411703N	41
1.752	1.756	.312	S	*451703	45
1.752	1.756	.312	S	*471703	47
1.752	1.756	.312	S	*481703	48
1.752	1.756	.313	S	712013	#
1.752	1.756	.375	S	*450541	45
1.752	1.756	.375	S	470541	47
1.752	1.756	.375	N	*470541N	47
1.752	1.756	.375	S	*480541	48
1.752	1.756	.437	S	*410230	41
1.752	1.756	.437	S	*450230	45
1.752	1.756	.437	N	*450230N	45
1.752	1.756	.437	S	470230	47
1.752	1.756	.437	H	*470230H	47
1.752	1.756	.437	S	*480230	48
1.780	1.785	.468	S	203005	203
1.780	1.785	.468	S	204005	204
1.780	1.785	.468	F	205005	205
1.828	**1.832**	**.296**	**S**	**450593**	**45**

For Illustration and Material Data See Technical Section

Designed For A Specific Application - Not Recommended For General Use ⬅➡ Hydrodynamic Lip Design-Bidirectional

* The U.S. customer service number is 877-4-TIMKEN. The Canadian customer service numbers are 800-565-4927 (English) and 800-565-0438 (French-Canadian). ★ Metric Seal

1.000" SHAFT (cont.)

Hsg. Bore	Seal O.D.	Seal Width	Lip Mat'l	Part No.	Type/ Illus.
1.828	1.832	.296	S	470593	47
1.828	1.832	.375	S	*452336	45
1.828	1.832	.375	S	*482336	48
1.828	1.832	.437	S	*50041S	5S
1.828	1.832	.437	S	*410041	41
1.828	1.832	.437	S	*450041	45
1.828	1.832	.437	N	*450041N	45
1.828	1.832	.437	S	470041	47
1.828	1.832	.437	S	*480041	48
1.874	**1.878**	**.250**	**S**	**471733**	**47**
1.874	1.878	.250	N	*471733N	47
1.874	1.878	.250	S	*481733	48
1.874	1.878	.375	S	*482522	48
1.874	1.878	.437	S	*410233	41
1.874	1.878	.437	S	*450233	45
1.874	1.878	.437	S	*470233	47
1.874	1.878	.437	S	*480233	48
1.936	1.948	.187	S	240462	24
1.936	1.948	.187	N	*240462N	24
1.983	**1.987**	**.250**	**S**	**471744**	**47**
1.983	1.987	.437	S	*450549	45
2.000	2.004	.250	S	40157S	4S
2.000	**2.004**	**.250**	**S**	**471760**	**47**
2.000	2.004	.250	A	471760A	47
2.000	**2.004**	**.250**	**V**	**471760V**	**47**
2.000	2.004	.250	S	*481760	48
2.000	2.004	.312	S	*452997	45
2.000	2.004	.375	S	*471770	47
2.000	2.004	.375	S	*481770	48
2.000	2.004	.437	S	*410157	41
2.000	2.004	.437	S	*450157	45
2.000	2.004	.437	S	*470157	47
2.000	2.004	.437	S	*480157	48
2.000	2.004	.500	S	*484211	48
2.047	**2.051**	**.312**	**S**	**472138**	**47**
2.047	2.051	.312	N	*472138N	47
2.062	**2.066**	**.250**	**S**	**471619**	**47**
2.062	2.066	.375	S	453165	45
2.062	2.066	.437	S	*410187	41
2.062	2.066	.437	S	*450187	45
2.062	2.066	.437	S	*470187	47
2.062	2.066	.437	S	*480187	48
2.106	2.110	.468	S	*291190	29
2.441	**2.445**	**.375**	**S**	**471516**	**47**
2.441	2.447	.375	S	321516	32
2.533	**2.537**	**.250**	**S**	**472539**	**47**
2.812	2.817	1.156	N	*6855N	1S
2.875	2.879	.468	S	*3126	41
2.875	2.879	.468	S	*452744	45

25,50mm (1.004") SHAFT

Hsg. Bore	Seal O.D.	Seal Width	Lip Mat'l	Part No.	Type/ Illus.
–	–	–	S	800250	VRS1
–	–	–	S	800251	VRS2
–	–	–	V	800254	VRS1
38,50	*38,70*	*8,50*	*S*	710303★	35
1.516	1.524	.335			

25,70mm (1.012") SHAFT

Hsg. Bore	Seal O.D.	Seal Width	Lip Mat'l	Part No.	Type/ Illus.
34,80	*35,00*	*7,00*	*S*	*25.7X35X7★	32
1.370	1.378	.276			

26,00mm (1.024") SHAFT

Hsg. Bore	Seal O.D.	Seal Width	Lip Mat'l	Part No.	Type/ Illus.
–	–	–	S	800250	VRS1
–	–	–	S	800251	VRS2
–	–	–	V	800254	VRS1
–	**–**	**.313**		**99103**	**Redi-Sleeve**
34,80	*35,00*	*7,00*	*S*	*26X35X7★	32
1.370	1.378	.276			

26,00mm (1.024") SHAFT (cont.)

Hsg. Bore	Seal O.D.	Seal Width	Lip Mat'l	Part No.	Type/ Illus.
35,80	*36,00*	*5,00*	*S*	*26X36X5★	32
1.409	1.417	.197			
35,80	*36,00*	*7,00*	*S*	*26X36X7★	32
1.409	1.417	.276			
36,80	*37,00*	*8,00*	*S*	*26X37X8★	32
1.449	1.457	.315			
37,00	*37,20*	*7,00*	*S*	26X37X7★	32
1.457	1.465	.276			
37,80	*38,00*	*7,00*	*S*	*26X38X7★	32
1.488	1.496	.276			
37,80	*38,00*	*8,00*	*S*	*26X38X8★	32
1.488	1.496	.315			
38,00	*38,20*	*5,00*	*S*	26X38X5★	32
1.496	1.504	.197			
38,00	*38,20*	*8,00*	*N*	222630★	32
1.496	1.504	.315			
39,80	*40,00*	*8,00*	*S*	*26X40X8★	32
1.567	1.575	.315			
39,80	*40,00*	*10,00*	*S*	*26X40X10★	32
1.567	1.575	.394			
40,00	*40,20*	*7,00*	*S*	26X40X7★	32
1.575	1.583	.276			
41,10	*41,30*	*10,00*	*S*	*26X41.3X10★	32
1.618	1.626	.394			
41,80	*42,00*	*8,00*	*S*	*26X42X8★	32
1.646	1.654	.315			
42,00	*42,20*	*7,00*	*S*	26X42X7★	32
1.654	1.661	.276			
42,00	*42,20*	*8,00*	*S*	710399★➡	32
1.654	1.661	.315			
42,00	*42,23*	*10,00*	*S*	26X42X10★	32
1.654	1.663	.394			
42,80	*43,00*	*8,00*	*S*	*26X43X8★	32
1.685	1.693	.315			
43,80	*44,00*	*7,00*	*S*	*26X44X7★	32
1.724	1.732	.276			
44,00	*44,20*	*8,00*	*S*	710153★	#
1.732	1.740	.315			
44,80	*45,00*	*7,00*	*S*	*26X45X7★	32
1.764	1.772	.276			
44,80	*45,00*	*10,00*	*S*	*26X45X10★	32
1.764	1.772	.394			
45,00	*45,20*	*8,00*	*S*	*26X45X8★	32
1.772	1.780	.315			
46,00	*46,20*	*8,00*	*S*	*26X46X8★	32
1.811	1.819	.315			
46,80	*47,00*	*6,00*	*S*	*26X47X6★	32
1.842	1.850	.236			
46,80	*47,00*	*8,00*	*S*	*26X47X8★	32
1.842	1.850	.315			
46,80	*47,00*	*10,00*	*S*	*26X47X10★	32
1.842	1.850	.394			
46,80	*47,00*	*11,00*	*S*	*26X47X11★	32
1.842	1.850	.433			
46,80	*47,00*	*12,00*	*S*	*26X47X12★	32
1.842	1.850	.472			
47,00	*47,23*	*7,00*	*S*	26X47X7★	32
1.850	1.859	.276			
47,80	*48,00*	*8,00*	*S*	*26X48X8★	32
1.882	1.890	.315			
48,00	*48,23*	*7,00*	*S*	26X48X7★	32
1.890	1.899	.276			
48,00	*48,23*	*7,00*	*S*	222655★	32
1.890	1.899	.276			
49,80	*50,00*	*7,00*	*S*	*26X50X7★	32
1.961	1.969	.276			
49,80	*50,00*	*10,00*	*S*	*26X50X10★	32
1.961	1.969	.394			
50,00	*50,20*	*8,00*	*S*	*26X50X8★	32
1.969	1.976	.315			
51,75	*52,00*	*7,00*	*S*	*26X52X7★	32
2.037	2.047	.276			

For Illustration and Material Data See Technical Section
Designed For A Specific Application - Not Recommended For General Use ➡ Hydrodynamic Lip Design-CW
* The U.S. customer service number is 877-4-TIMKEN. The Canadian customer service numbers are 800-565-4927 (English) and 800-565-0438 (French-Canadian). ★ Metric Seal

Hsg. Bore	Seal O.D.	Seal Width	Lip Mat'l	Part No.	Type/ Illus.
26,00mm (1.024") SHAFT (cont.)					
52,00	*52,20*	*8,00*	*S*	26X52X8★	32
2.047	2.055	.315			
61,75	*62,00*	*9,00*	*S*	*26X62X9★	32
2.431	2.441	.354			
71,75	*72,00*	*10,00*	*S*	*26X72X10★	32
2.825	2.835	.394			
1.031" (1-1/32") SHAFT					
–	–	–	S	800250	VRS1
–	–	–	S	800251	VRS2
–	–	–	V	800254	VRS1
1.499	1.503	.390	L	50209	5L
1.575	1.579	.312	V	471076V	47
1.575	**1.579**	**.312**	**S**	**471076**	**47**
1.575	1.579	.312	V	471076V	47
1.575	1.579	.312	S	*481076	48
1.624	1.628	.250	S	481650	48
1.624	1.628	.437	S	*450220	45
1.037" SHAFT					
–	–	–	S	800250	VRS1
–	–	–	S	800251	VRS2
–	–	–	V	800254	VRS1
1.575	1.579	.333	S	*4346➡	#
1.040" SHAFT					
–	–	–	S	800250	VRS1
–	–	–	S	800251	VRS2
–	–	–	V	800254	VRS1
1.811	1.815	.280	S	*484132	48
1.044" SHAFT					
.000	1.713	.275	V	710511	32
1.047" SHAFT					
–	–	–	S	800250	VRS1
–	–	–	S	800251	VRS2
–	–	–	V	800254	VRS1
1.811	1.815	.285	S	710053	48
1.055" SHAFT					
–	–	–	S	800250	VRS1
–	–	–	S	800251	VRS2
–	–	–	V	800254	VRS1
1.500	1.504	.268	S	9376	68
1.062" (1-1/16") SHAFT					
–	–	–	S	800250	VRS1
–	–	–	S	800251	VRS2
–	–	–	V	800254	VRS1
–	**–**	**.313**		**99106**	**Redi-Sleeve**
1.499	**1.503**	**.312**	**S**	**480210**	**48**
1.499	1.503	.312	H	*480210H	48
1.499	1.503	.390	S	*450210	45
1.499	1.507	.250	S	340210	34
1.561	**1.565**	**.375**	**S**	**450188**	**45**
1.561	1.565	.375	S	*480188	48
1.575	1.579	.312	S	*481343	48
1.575	1.581	.250	S	3732S➡	48
1.624	**1.628**	**.250**	**S**	**471651**	**47**
1.624	1.628	.250	S	*481651	48
1.624	1.628	.312	S	*451664	45
1.624	1.628	.312	N	*451664N	45
1.624	1.628	.437	S	*450221	45
1.624	1.628	.437	S	*480221	48
1.686	1.690	.375	L	*50606	5L
1.062" (1-1/16") SHAFT (cont.)					
1.686	**1.690**	**.375**	**S**	**470606**	**47**
1.689	1.693	.250	S	*481677	48
1.750	1.754	.375	S	*471001	47
1.752	1.756	.312	S	*451705	45
1.752	**1.756**	**.312**	**S**	**471705**	**47**
1.752	1.756	.375	S	*451718	45
1.752	1.756	.375	S	*471718	47
1.752	1.756	.375	S	*481718	48
1.752	1.756	.437	S	*450232	45
1.752	1.756	.437	S	*480232	48
1.828	1.832	.375	S	*452584	45
1.828	**1.832**	**.375**	**S**	**473419**	**47**
1.828	1.832	.375	S	*482584	48
1.828	1.832	.375	V	*482584V	48
1.828	1.832	.437	S	450043	45
1.828	1.832	.437	S	*480043	48
1.874	**1.878**	**.250**	**S**	**471735**	**47**
1.874	1.878	.250	H	*471735H	47
1.874	1.878	.375	S	*473378	47
1.874	1.878	.437	S	*450127	45
1.874	1.878	.437	H	*450127H	45
1.874	1.878	.437	S	*480127	48
1.874	1.878	.437	N	*480127N	48
1.938	1.942	.625	F	*205011	205
1.983	**1.987**	**.437**	**S**	**450342**	**45**
1.983	1.987	.437	N	*450342N	45
1.983	1.987	.437	S	470342	47
1.983	1.987	.437	S	*480342	48
2.000	**2.004**	**.250**	**S**	**471762**	**47**
2.000	2.004	.375	S	*451772	45
2.000	2.004	.375	S	471772	47
2.000	2.004	.375	S	*481772	48
2.000	2.004	.437	S	*450158	45
2.000	2.004	.437	S	*480158	48
2.062	**2.066**	**.375**	**S**	**473420**	**47**
2.062	2.066	.437	S	*450628	45
2.062	2.066	.437	S	*480628	48
2.750	2.754	.437	S	*204084	204
2.835	**2.839**	**.375**	**S**	**472953**	**47**
2.835	2.839	.375	V	472953V	47
27,00mm (1.063") SHAFT					
–	–	–	S	800250	VRS1
–	–	–	S	800251	VRS2
–	–	–	V	800254	VRS1
–	**–**	**.313**		**99106**	**Redi-Sleeve**
35,80	*36,00*	*6,00*	*S*	*27X36X6★	32
1.409	1.417	.236			
36,80	*37,00*	*8,50*	*S*	*27X37X8.5★	32
1.449	1.457	.335			
37,00	*37,15*	*7,00*	*S*	27X37X7★	35
1.457	1.463	.276			
37,00	*37,20*	*7,00*	*V*	*27X37X7V★	35
1.457	1.465	.276			
37,80	*38,00*	*5,00*	*S*	*27X38X5★	32
1.488	1.496	.197			
37,80	*38,00*	*6,00*	*S*	*27X38X6★	32
1.488	1.496	.236			
39,80	*40,00*	*6,00*	*S*	*27X40X6★	32
1.567	1.575	.236			
39,80	*40,00*	*7,00*	*S*	*27X40X7★	32
1.567	1.575	.276			
39,80	*40,00*	*8,00*	*S*	*27X40X8★	32
1.567	1.575	.315			
39,80	*40,00*	*10,00*	*S*	*27X40X10★	32
1.567	1.575	.394			
39,80	*40,00*	*12,00*	*S*	*27X40X12★	32
1.567	1.575	.472			
40,00	*40,20*	*8,00*	*V*	712009★	32
1.575	1.583	.315			

For Illustration and Material Data See Technical Section
Designed For A Specific Application - Not Recommended For General Use ➡ Hydrodynamic Lip Design-CW
* The U.S. customer service number is 877-4-TIMKEN. The Canadian customer service numbers are 800-565-4927 (English) and 800-565-0438 (French-Canadian). ★ Metric Seal

27,00mm (1.063") SHAFT (cont.)

Hsg. Bore	Seal O.D.	Seal Width	Lip Mat'l	Part No.	Type/ Illus.
41,00	41,10	9,50	S	*1193★	#
1.614	1.618	.374			
41,80	42,00	5,00	S	*27X42X5★	32
1.646	1.654	.197			
41,80	42,00	8,00	S	*27X42X8★	32
1.646	1.654	.315			
42,00	42,10	7,00	V	222742★	48
1.654	1.657	.276			
42,00	42,20	7,00	S	27X42X7★	35
1.654	1.661	.276			
42,00	42,23	10,00	S	27X42X10★	35
1.654	1.663	.394			
42,80	43,00	9,00	S	*27X43X9★	32
1.685	1.693	.354			
43,00	43,20	8,00	S	27X43X8★	32
1.693	1.701	.315			
43,00	43,20	9,00	H	222743★⬅	32
1.693	1.701	.354			
43,00	43,25	9,00	N	1990★➡	32
1.693	1.703	.354			
45,00	45,25	8,00	S	27X45X8★	35
1.772	1.781	.315			
45,00	45,25	9,00	N	222745★➡	32
1.772	1.781	.354			
46,00	46,20	8,00	S	*27X46X8★	32
1.811	1.819	.315			
46,80	47,00	7,00	S	*27X47X7★	32
1.842	1.850	.276			
47,00	47,23	8,00	S	*27X47X8★	35
1.850	1.859	.315			
47,00	47,23	10,00	S	27X47X10★	35
1.850	1.859	.394			
48,00	48,20	8,00	S	*27X48X8★	32
1.890	1.898	.315			
49,80	50,00	10,00	S	*27X50X10★	32
1.961	1.969	.394			
50,00	50,20	8,00	S	*27X50X8★	32
1.969	1.976	.315			
52,00	52,20	8,00	S	27X52X8★	35
2.047	2.055	.315			
52,75	53,00	7,00	S	*27X53X7★	32
2.077	2.087	.276			

27,60mm (1.087") SHAFT

Hsg. Bore	Seal O.D.	Seal Width	Lip Mat'l	Part No.	Type/ Illus.
39,80	40,00	5,50	S	*27.6X40X5.5★	32
1.567	1.575	.217			

1.093" (1-3/32") SHAFT

Hsg. Bore	Seal O.D.	Seal Width	Lip Mat'l	Part No.	Type/ Illus.
–	–	–	S	800280	VRS1
–	–	–	V	800284	VRS1
1.625	1.628	.312	S	*482454	48
1.828	1.832	.437	S	450044	45
1.874	1.878	.437	H	*480235H	48
1.874	1.878	.437	V	*480235V	48
2.000	2.004	.437	S	450159	45

1.100" SHAFT

Hsg. Bore	Seal O.D.	Seal Width	Lip Mat'l	Part No.	Type/ Illus.
–	–	–	S	800280	VRS1
–	–	–	V	800284	VRS1
–	**–**	**.375**		**99111**	**Redi-Sleeve**
1.572	1.578	.308	N	2503➡	48
1.572	1.578	.308	N	2503N➡	48

28,00mm (1.102") SHAFT

Hsg. Bore	Seal O.D.	Seal Width	Lip Mat'l	Part No.	Type/ Illus.
–	–	–	S	800280	VRS1
–	–	–	V	800284	VRS1
–	**–**	**.375**		**99111**	**Redi-Sleeve**

28,00mm (1.102") SHAFT (cont.)

Hsg. Bore	Seal O.D.	Seal Width	Lip Mat'l	Part No.	Type/ Illus.
34,80	35,00	5,00	S	*28X35X5★	32
1.370	1.378	.197			
34,80	35,00	7,00	S	*28X35X7★	32
1.370	1.378	.276			
34,80	35,00	10,00	S	*28X35X10★	32
1.370	1.378	.394			
35,80	36,00	7,00	S	*28X36X7★	32
1.409	1.417	.276			
37,80	38,00	5,00	S	*28X38X5★	32
1.488	1.496	.197			
37,80	38,00	8,00	S	*28X38X8★	32
1.488	1.496	.315			
38,00	38,20	10,00	S	710347★⬅	32
1.496	1.504	.394			
38,00	38,23	7,00	S	28X38X7★	32
1.496	1.505	.276			
38,00	38,25	7,00	T	712104★➡	PDW
1.496	1.506	.276			
39,80	40,00	9,00	S	*28X40X9★	32
1.567	1.575	.354			
39,80	40,00	10,00	S	*28X40X10★	32
1.567	1.575	.394			
40,00	40,20	7,00	V	*28X40X7V★	35
1.575	1.583	.276			
40,00	40,20	7,00	S	710325★➡	32
1.575	1.583	.276			
40,00	40,20	8,00	S	28X40X8★	32
1.575	1.583	.315			
40,00	40,26	7,00	S	28X40X7★	32
1.575	1.585	.276			
40,00	40,31	7,00	S	*1107★	33
1.575	1.587	.276			
40,00	40,34	7,00	S	222820★	33
1.575	1.588	.276			
41,00	41,10	8,00	T	39869★➡	#
1.614	1.618	.315			
41,00	41,27	7,00	N	222830★⬅	32
1.614	1.625	.276			
41,05	41,25	6,00	S	*28X41.25X6★	32
1.616	1.624	.236			
41,30	41,50	8,00	S	*28X41.5X8★	32
1.626	1.634	.315			
41,80	42,00	6,00	S	*28X42X6★	32
1.646	1.654	.236			
41,80	42,00	7,00	S	*28X42X7★	32
1.646	1.654	.276			
41,80	42,00	10,00	S	*28X42X10★	32
1.646	1.654	.394			
42,00	42,20	8,00	H	712008★	32
1.654	1.661	.315			
42,00	42,20	10,00	V	*28X42X10V★	35
1.654	1.661	.394			
42,00	42,23	8,00	S	28X42X8★	35
1.654	1.663	.315			
42,30	42,50	8,00	S	*28X42.5X8★	32
1.665	1.673	.315			
42,50	42,72	8,00	S	710216★	35
1.673	1.682	.315			
42,80	43,00	6,00	S	*28X43X6★	32
1.685	1.693	.236			
42,80	43,00	10,00	S	*28X43X10★	32
1.685	1.693	.394			
43,00	43,23	7,00	S	710157★➡	32
1.693	1.702	.276			
43,00	43,23	8,00	N	710119★	32
1.693	1.702	.315			
43,80	44,00	7,00	S	*28X44X7★	32
1.724	1.732	.276			
43,80	44,00	8,00	S	*28X44X8★	32
1.724	1.732	.315			
44,00	44,20	6,00	N	222835★	32
1.732	1.740	.236			

For Illustration and Material Data See Technical Section

Designed For A Specific Application - Not Recommended For General Use ➡ Hydrodynamic Lip Design-CW ⬅ Hydrodynamic Lip Design-CCW

* The U.S. customer service number is 877-4-TIMKEN. The Canadian customer service numbers are 800-565-4927 (English) and 800-565-0438 (French-Canadian). ★ Metric Seal

Hsg. Bore	Seal O.D.	Seal Width	Lip Mat'l	Part No.	Type/ Illus.
28,00mm (1.102") SHAFT (cont.)					
44,00	*44,23*	*6,00*	*N*	28X44X6★	32
1.732	1.741	.236			
44,80	*45,00*	*7,00*	*S*	*28X45X7★	32
1.764	1.772	.276			
44,80	*45,00*	*8,70*	*S*	*28X45X8.7★	32
1.764	1.772	.343			
44,80	*45,00*	*10,00*	*S*	*28X45X10★	32
1.764	1.772	.394			
45,00	*45,20*	*7,00*	*V*	*28X45X7V★	35
1.772	1.780	.276			
45,00	*45,20*	*8,00*	*S*	28X45X8★	32
1.772	1.780	.315			
46,00	*46,20*	*8,00*	*S*	*28X46X8★	32
1.811	1.819	.315			
46,80	*47,00*	*6,00*	*S*	*28X47X6★	32
1.842	1.850	.236			
46,80	*47,00*	*9,00*	*S*	*28X47X9★	32
1.842	1.850	.354			
46,80	*47,00*	*10,00*	*S*	*28X47X10★	32
1.842	1.850	.394			
46,89	*47,00*	*8,00*	*S*	*333860★	33
1.846	1.850	.315			
47,00	*47,20*	*7,00*	*V*	*28X47X7V★	35
1.850	1.858	.276			
47,00	*47,22*	*7,00*	*S*	28X47X7★	32
1.850	1.859	.276			
47,00	*47,22*	*8,00*	*S*	*28X47X8★	33
1.850	1.859	.315			
47,00	*47,22*	*8,00*	*N*	222860★➡	32
1.850	1.859	.315			
47,80	*48,00*	*7,00*	*S*	*28X48X7★	32
1.882	1.890	.276			
47,80	*48,00*	*11,00*	*S*	*28X48X11★	32
1.882	1.890	.433			
48,00	*48,20*	*8,00*	*S*	28X48X8★	32
1.890	1.898	.315			
49,80	*50,00*	*10,00*	*S*	*28X50X10★	32
1.961	1.969	.394			
50,00	*50,20*	*8,00*	*S*	*28X50X8★	32
1.969	1.976	.315			
50,75	*51,00*	*10,00*	*S*	*28X51X10★	32
1.998	2.008	.394			
51,75	*52,00*	*6,00*	*S*	*28X52X6★	32
2.037	2.047	.236			
51,75	*52,00*	*8,00*	*S*	*28X52X8★	32
2.037	2.047	.315			
51,75	*52,00*	*10,00*	*S*	*28X52X10★	32
2.037	2.047	.394			
52,00	*52,20*	*7,00*	*V*	*28X52X7V★	32
2.047	2.055	.276			
52,00	*52,23*	*7,00*	*S*	28X52X7★	32
2.047	2.056	.276			
2.087	2.091	.378	S	710433	#
55,75	*56,00*	*6,00*	*S*	*28X56X6★	32
2.195	2.205	.236			
55,75	*56,00*	*7,00*	*S*	*28X56X7★	32
2.195	2.205	.276			
57,75	*58,00*	*6,00*	*S*	*28X58X6★	32
2.273	2.283	.236			
57,75	*58,00*	*10,00*	*S*	*28X58X10★	32
2.273	2.283	.394			
61,75	*62,00*	*10,00*	*S*	*28X62X10★	32
2.431	2.441	.394			
28,50mm (1.122") SHAFT					
39,30	*39,50*	*9,50*	*S*	*28.5X39.5X9.5★	32
1.547	1.555	.374			
1.125" (1-1/8") SHAFT					
–	–	–	S	800280	VRS1
–	–	–	V	800284	VRS1
–	**–**	**.313**		**99112**	**Redi-Sleeve**
1.375	1.381	.125	S	340835	34
1.438	1.444	.215	S	313842	31
1.494	1.505	.250	S	340815	34
1.500	1.504	.250	S	1037	35
1.502	1.506	.250	S	312140	31
1.561	**1.565**	**.250**	**N**	**472560N**	**47**
1.561	1.565	.250	V	*472560V	47
1.561	1.565	.375	S	50151S	5S
1.561	1.567	.250	S	352560	35
1.561	1.569	.250	S	340151	34
1.561	1.572	.187	S	240151	24
1.562	1.566	.220	S	7941	44
1.563	1.583	.375	S	*712140	35
1.564	1.568	.250	S	43072S	4S
1.624	1.628	.190	N	3638➡	48
1.624	1.628	.245	S	482208	48
1.624	**1.628**	**.250**	**S**	**471652**	**47**
1.624	1.628	.250	A	471652A	47
1.624	1.628	.250	H	*471652H	47
1.624	1.628	.250	N	*471652N	47
1.624	**1.628**	**.250**	**V**	**471652V**	**47**
1.624	1.628	.250	S	*481652	48
1.624	1.628	.250	N	*481652N	48
1.624	1.628	.250	V	481652V	48
1.624	1.628	.312	S	*411100	41
1.624	1.628	.312	N	*411100N	41
1.624	1.628	.312	S	*451100	45
1.624	1.628	.312	H	*451100H	45
1.624	1.628	.312	N	*451100N	45
1.624	1.628	.312	S	471100	47
1.624	1.628	.312	N	*471100N	47
1.624	1.628	.312	S	*481100	48
1.624	1.628	.437	S	*410381	41
1.624	1.628	.437	S	*450381	45
1.624	1.628	.437	S	*470381	47
1.624	1.628	.437	S	*480381	48
1.630	1.634	.313	S	710181	#
1.630	1.634	.313	S	710285	#
1.689	1.693	.250	S	*481678	48
1.752	1.756	.250	V	471692V	47
1.752	**1.756**	**.250**	**S**	**471692**	**47**
1.752	1.756	.250	A	471692A	47
1.752	1.756	.250	N	*471692N	47
1.752	1.756	.250	S	*481692	48
1.752	1.756	.312	S	*411706	41
1.752	1.756	.312	S	*451706	45
1.752	1.756	.312	S	*471706	47
1.752	1.756	.312	N	*471706N	47
1.752	1.756	.312	S	*481706	48
1.752	1.756	.375	S	*451133	45
1.752	1.756	.375	S	*471133	47
1.752	1.756	.375	S	*481133	48
1.752	1.756	.437	S	*410189	41
1.752	1.756	.437	S	*450189	45
1.752	1.756	.437	H	*450189H	45
1.752	1.756	.437	S	470189	47
1.752	1.756	.437	H	470189H	47
1.752	1.756	.437	N	*470189N	47
1.752	1.756	.437	S	*480189	48
1.752	1.756	.437	H	*480189H	48
1.780	1.785	.250	S	204505	204
1.780	1.785	.468	S	203020	203
1.780	1.785	.468	S	204020	204
1.781	1.785	.468	F	*205020	205
1.781	1.787	.406	S	323133	32
1.828	**1.832**	**.312**	**S**	**476838**	**47**
1.828	1.832	.375	S	*451258	45
1.828	1.832	.375	S	*481258	48
1.828	1.832	.437	S	*410045	41

For Illustration and Material Data See Technical Section
Designed For A Specific Application - Not Recommended For General Use ➡ Hydrodynamic Lip Design-CW
* The U.S. customer service number is 877-4-TIMKEN. The Canadian customer service numbers are 800-565-4927 (English) and 800-565-0438 (French-Canadian). ★ Metric Seal

1.125" (1-1/8") SHAFT (cont.)

Hsg. Bore	Seal O.D.	Seal Width	Lip Mat'l	Part No.	Type/ Illus.
1.828	1.832	.437	S	*450045	45
1.828	1.832	.437	H	*450045H	45
1.828	1.832	.437	N	*450045N	45
1.828	1.832	.437	V	*450045V	45
1.828	1.832	.437	S	470045	47
1.828	1.832	.437	S	*480045	48
1.850	**1.859**	**.312**	**S**	**350974**	**35**
1.874	**1.878**	**.250**	**S**	**470712**	**47**
1.874	1.878	.250	A	470712A	47
1.874	1.878	.250	N	*470712N	47
1.874	**1.878**	**.250**	**V**	**470712V**	**47**
1.874	1.878	.250	S	*480712	48
1.874	1.878	.375	S	*472523	47
1.874	1.878	.375	S	*482523	48
1.874	1.878	.437	S	*410236	41
1.874	1.878	.437	H	*410236H	41
1.874	1.878	.437	S	*450236	45
1.874	1.878	.437	H	*450236H	45
1.874	1.878	.437	S	470236	47
1.874	1.878	.437	S	*480236	48
1.874	1.878	.625	L	6704	1L
1.935	1.942	.625	S	6832S	204
1.937	1.942	.562	S	203003	203
1.937	1.942	.625	S	*203004	203
1.937	1.942	.625	F	205004	205
1.983	**1.987**	**.250**	**S**	**471747**	**47**
1.983	1.987	.375	S	472674	47
1.983	1.987	.375	S	*482674	48
1.983	1.987	.437	S	*410182	41
1.983	1.987	.437	S	*450182	45
1.983	1.987	.437	S	*470182	47
1.983	1.987	.437	S	*480182	48
2.000	2.004	.250	S	40160S	4S
2.000	**2.004**	**.250**	**S**	**471763**	**47**
2.000	2.004	.250	A	471763A	47
2.000	**2.004**	**.250**	**V**	**471763V**	**47**
2.000	2.004	.250	S	*481763	48
2.000	2.004	.312	H	*471464H	47
2.000	2.004	.375	S	*450426	45
2.000	2.004	.437	S	*50160	5S
2.000	2.004	.437	S	*410160	41
2.000	2.004	.437	S	*450160	45
2.000	2.004	.437	S	*470160	47
2.000	2.004	.437	S	*480160	48
2.000	2.004	.500	S	*470642	47
2.047	**2.051**	**.312**	**S**	**472644**	**47**
2.047	2.051	.312	V	472644V	47
2.062	2.066	.250	S	*41785S	4S
2.062	**2.066**	**.250**	**S**	**471785**	**47**
2.062	2.066	.250	V	*471785V	47
2.062	2.066	.375	S	*451135	45
2.062	2.066	.375	H	*451135H	45
2.062	2.066	.375	S	*481135	48
2.062	2.066	.375	H	*481135H	48
2.062	2.066	.437	S	*410241	41
2.062	2.066	.437	S	*450241	45
2.062	2.066	.437	S	470241	47
2.062	2.066	.437	V	*470241V	47
2.062	2.066	.437	S	*480241	48
2.125	**2.129**	**.250**	**S**	**481792**	**48**
2.125	2.129	.250	N	*481792N	48
2.125	2.129	.437	S	*411060	41
2.125	2.129	.437	S	*451060	45
2.125	2.129	.437	S	*471060	47
2.250	**2.254**	**.500**	**S**	**450604**	**45**
2.250	2.254	.500	N	*450604N	45
2.250	2.254	.500	S	470604	47
2.250	2.254	.500	S	*480604	48
2.437	**2.441**	**.468**	**S**	**450332**	**45**
2.441	**2.445**	**.250**	**S**	**473259**	**47**
2.441	2.445	.250	V	*473259V	47
2.441	2.445	.375	S	472681	47

1.125" (1-1/8") SHAFT (cont.)

Hsg. Bore	Seal O.D.	Seal Width	Lip Mat'l	Part No.	Type/ Illus.
2.441	2.445	.375	V	472681V	47
2.533	**2.537**	**.250**	**S**	**472535**	**47**
2.835	**2.839**	**.375**	**S**	**472954**	**47**
2.835	2.839	.375	V	472954V	47
2.875	2.879	.468	S	450430	45

28,60mm (1.126") SHAFT

–	–	–	S	800280	VRS1
–	–	–	V	800284	VRS1
–	**–**	**.313**		**99112**	**Redi-Sleeve**
39,80	*40,00*	*8,00*	*S*	*28.6X40X8★	32
1.567	1.575	.315			
43,00	*43,15*	*6,50*	*S*	1989★	47
1.693	1.699	.256			

29,00mm (1.142") SHAFT

–	–	–	S	800300	VRS1
0,00	*37,01*	*5,00*	*S*	710504★	35
.000	1.457	.197			
42,80	*43,00*	*8,00*	*S*	*29X43X8★	32
1.685	1.693	.315			
43,80	*44,00*	*7,00*	*S*	*29X44X7★	32
1.724	1.732	.276			
44,80	*45,00*	*9,00*	*S*	*29X45X9★	32
1.764	1.772	.354			
45,00	*45,23*	*8,00*	*S*	320595★	32
1.772	1.781	.315			
45,80	*46,00*	*10,00*	*S*	*29X46X10★	32
1.803	1.811	.394			
46,80	*47,00*	*8,00*	*S*	*29X47X8★	32
1.842	1.850	.315			
46,80	*47,00*	*10,00*	*S*	*29X47X10★	32
1.842	1.850	.394			
49,80	*50,00*	*10,00*	*S*	*29X50X10★	32
1.961	1.969	.394			
55,75	*56,00*	*10,00*	*S*	*29X56X10★	32
2.195	2.205	.394			
61,95	*62,20*	*9,00*	*S*	*29X62.2X9★	32
2.439	2.449	.354			

1.145" SHAFT

–	–	–	S	800300	VRS1
1.765	1.722	.070	S	*8734	#

1.153" SHAFT

–	–	–	S	800300	VRS1
1.686	1.690	.437	S	*7392S	#

1.156" (1-5/32") SHAFT

–	–	–	S	800300	VRS1
–	**–**	**.375**		***99120**	**Redi-Sleeve**
1.575	1.580	.312	V	250437V	25
1.686	**1.690**	**.250**	**S**	**474260**	**47**
1.686	1.690	.375	S	450502	45
1.686	1.690	.375	S	*480502	48
1.752	1.756	.312	S	*451707	45
1.752	1.756	.312	S	471707	47
1.752	1.756	.312	N	471707N	47
1.828	1.832	.437	S	450482	45
1.828	1.832	.437	S	*480482	48
1.874	**1.878**	**.250**	**S**	**471736**	**47**
1.874	1.878	.250	S	*481736	48
1.874	1.878	.437	H	*482457H	48
1.875	1.878	.437	S	*450948	45
1.983	1.987	.250	N	*481748N	48
1.983	1.987	.375	S	*480906	48
1.983	1.987	.437	S	*450046	45

For Illustration and Material Data See Technical Section
Designed For A Specific Application - Not Recommended For General Use
* The U.S. customer service number is 877-4-TIMKEN. The Canadian customer service numbers are 800-565-4927 (English) and 800-565-0438 (French-Canadian). ★ Metric Seal

Hsg. Bore	Seal O.D.	Seal Width	Lip Mat'l	Part No.	Type/ Illus.
1.156" (1-5/32") SHAFT (cont.)					
1.984	1.988	.250	V	*473428V	47
1.984	1.988	.250	S	473428	47
2.000	**2.004**	**.250**	**S**	**471764**	**47**
2.000	2.004	.375	S	481773	48
2.000	2.004	.437	S	450161	45
2.000	2.004	.437	H	*450161H	45
2.000	2.004	.437	V	*450161V	45
2.000	2.004	.437	S	*480161	48
2.062	**2.066**	**.375**	**S**	**473427**	**47**
2.062	2.066	.437	S	*450051	45
2.062	2.066	.437	V	*450051V	45
2.062	2.066	.437	S	*470051	47
2.125	**2.129**	**.437**	**S**	**450362**	**45**
2.125	2.129	.437	S	470362	47
2.250	2.254	.500	S	*450600	45
2.834	**2.839**	**.375**	**S**	**472239**	**47**
1.170" SHAFT					
–	–	–	S	800300	VRS1
2.000	2.004	.250	S	*43069S	4S
2.031	**2.035**	**.375**	**S**	**451182**	**45**
1.175" SHAFT					
–	–	–	S	800300	VRS1
–	**–**	**.313**		***99122**	**Redi-Sleeve**
1.771	1.775	.275	S	483488➡	48
1.828	1.832	.312	N	483054N	48
1.828	1.832	.312	V	*483054V	48
1.178" SHAFT					
–	–	–	S	800300	VRS1
–	**–**	**.313**		***99122**	**Redi-Sleeve**
1.654	1.659	.276	N	*3241	33
2.447	2.452	.500	V	4813V➡	86
30,00mm (1,181") SHAFT					
–	–	–	S	800300	VRS1
–	**–**	**.315**		**99114**	**Redi-Sleeve**
0,00	*61,20*	*9,00*	*S*	710516★	#
.000	2.409	.354			
30,00mm (1.181") SHAFT					
36,80	*37,00*	*6,00*	*S*	*30X37X6★	32
1.449	1.457	.236			
30,00mm (1,181") SHAFT					
37,00	*37,30*	*3,50*	*S*	710401★	#
1.457	1.461	.138			
30,00mm (1.181") SHAFT					
37,80	*38,00*	*5,00*	*S*	*30X38X5★	32
1.488	1.496	.197			
37,80	*38,00*	*6,00*	*S*	*30X38X6★	32
1.488	1.496	.236			
37,80	*38,00*	*7,00*	*S*	*30X38X7★	32
1.488	1.496	.276			
39,80	*40,00*	*5,00*	*S*	*30X40X5★	32
1.567	1.575	.197			
39,80	*40,00*	*8,00*	*S*	*30X40X8★	32
1.567	1.575	.315			
39,80	*40,00*	*10,00*	*S*	*30X40X10★	32
1.567	1.575	.394			
39,80	*40,00*	*12,00*	*S*	*30X40X12★	32
1.567	1.575	.472			
30,00mm (1,181") SHAFT					
40,00	*40,20*	*7,00*	*V*	*30X40X7V★	32
1.575	1.583	.276			
40,00	*40,23*	*7,00*	*S*	30X40X7★	32
1.575	1.584	.276			
40,00	*40,23*	*7,00*	*S*	223005★	48
1.575	1.584	.276			
40,00	*40,25*	*7,00*	*S*	1129★	35
1.575	1.585	.276			
30,00mm (1.181") SHAFT					
40,80	*41,00*	*7,00*	*S*	*30X41X7★	32
1.606	1.614	.276			
41,80	*42,00*	*4,50*	*S*	*30X42X4.5★	32
1.646	1.654	.177			
41,80	*42,00*	*8,00*	*S*	*30X42X8★	32
1.646	1.654	.315			
41,80	*42,00*	*10,00*	*S*	*30X42X10★	32
1.646	1.654	.394			
30,00mm (1,181") SHAFT					
42,00	*42,20*	*7,00*	*S*	30X42X7★	35
1.654	1.661	.276			
42,00	*42,20*	*7,00*	*V*	*30X42X7V★	32
1.654	1.661	.276			
42,00	*42,20*	*7,00*	*S*	223010★➡	32
1.654	1.661	.276			
42,00	*42,27*	*7,00*	*S*	1970★	35
1.654	1.664	.276			
30,00mm (1.181") SHAFT					
42,80	*43,00*	*7,00*	*S*	*30X43X7★	32
1.685	1.693	.276			
42,80	*43,00*	*8,00*	*S*	*30X43X8★	32
1.685	1.693	.315			
42,80	*43,00*	*8,50*	*S*	*30X43X8.5★	32
1.685	1.693	.335			
42,80	*43,00*	*9,00*	*S*	*30X43X9★	32
1.685	1.693	.354			
43,80	*44,00*	*9,00*	*S*	*30X44X9★	32
1.724	1.732	.354			
43,80	*44,00*	*10,00*	*S*	*30X44X10★	32
1.724	1.732	.394			
30,00mm (1,181") SHAFT					
44,00	*44,20*	*7,00*	*N*	223012★➡	32
1.732	1.740	.276			
44,00	*44,28*	*7,00*	*S*	30X44X7★	32
1.732	1.743	.276			
30,00mm (1.181") SHAFT					
44,30	*44,50*	*7,00*	*S*	*30X44.5X7★	32
1.744	1.752	.276			
44,80	*45,00*	*6,00*	*S*	*30X45X6★	32
1.764	1.772	.236			
44,80	*45,00*	*7,00*	*S*	*30X45X7★	32
1.764	1.772	.276			
44,80	*45,00*	*10,00*	*S*	*30X45X10★	32
1.764	1.772	.394			
44,80	*45,00*	*13,00*	*S*	*30X45X13★	32
1.764	1.772	.512			
30,00mm (1,181") SHAFT					
45,00	*45,22*	*5,00*	*S*	30X45X5★	32
1.772	1.780	.197			
45,00	*45,20*	*6,00*	*S*	223014★	32
1.772	1.780	.236			

For Illustration and Material Data See Technical Section
Designed For A Specific Application - Not Recommended For General Use ➡ Hydrodynamic Lip Design-CW
* The U.S. customer service number is 877-4-TIMKEN. The Canadian customer service numbers are 800-565-4927 (English) and 800-565-0438 (French-Canadian). ★ Metric Seal

Hsg. Bore	Seal O.D.	Seal Width	Lip Mat'l	Part No.	Type/ Illus.
30,00mm (1,181") SHAFT (cont.)					
45,00	45,20	8,00	S	30X45X8★	32
1.772	1.780	.315			
45,00	45,20	8,00	V	*30X45X8V★	35
1.772	1.780	.315			
45,00	45,20	8,00	S	710359★⬅	#
1.772	1.780	.315			
45,00	45,20	15,00	S	2016★⬅	#
1.772	1.780	.591			
45,00	45,23	8,00	S	1981★	35
1.772	1.781	.315			
30,00mm (1.181") SHAFT					
45,80	46,00	8,00	S	*30X46X8★	32
1.803	1.811	.315			
30,00mm (1,181") SHAFT					
46,00	46,20	7,00	S	30X46X7★	32
1.811	1.819	.276			
46,00	46,23	7,00	S	223018★	32
1.811	1.820	.276			
46,00	46,30	8,00	N	712001★➡	32
1.811	1.823	.315			
30,00mm (1.181") SHAFT					
46,80	47,00	5,00	S	*30X47X5★	32
1.842	1.850	.197			
46,80	47,00	6,00	S	*30X47X6★	32
1.842	1.850	.236			
46,80	47,00	8,00	S	*30X47X8★	32
1.842	1.850	.315			
46,80	47,00	10,00	S	*30X47X10★	32
1.842	1.850	.394			
30,00mm (1,181") SHAFT					
47,00	47,20	7,00	V	*30X47X7V★	32
1.850	1.858	.276			
47,00	47,25	7,00	S	30X47X7★	32
1.850	1.860	.276			
47,00	47,25	8,00	S	223020★	35
1.850	1.860	.315			
30,00mm (1.181") SHAFT					
47,80	48,00	7,00	S	*30X48X7★	32
1.882	1.890	.276			
47,80	48,00	10,00	S	*30X48X10★	32
1.882	1.890	.394			
30,00mm (1,181") SHAFT					
48,00	48,28	8,00	S	30X48X8★	32
1.890	1.901	.315			
48,00	48,30	8,00	S	714619★	35
1.890	1.902	.315			
30,00mm (1.181") SHAFT					
48,30	48,50	8,00	S	*30X48.5X8★	32
1.901	1.909	.315			
48,80	49,00	8,00	S	*30X49X8★	32
1.921	1.929	.315			
49,80	50,00	10,00	S	*30X50X10★	32
1.961	1.969	.394			
49,80	50,00	11,00	S	*30X50X11★	32
1.961	1.969	.433			
49,80	50,00	11,00	S	*30X50X11★	32
1.961	1.969	.433			
49,80	50,00	12,00	S	*30X50X12★	32
1.961	1.969	.472			
30,00mm (1,181") SHAFT					
50,00	50,20	8,00	S	30X50X8★	48
1.969	1.976	.315			
50,00	50,20	10,00	V	*30X50X10V★	35
1.969	1.976	.394			
50,00	50,23	7,00	S	30X50X7★	32
1.969	1.978	.276			
50,00	50,23	7,00	S	223050★➡	32
1.969	1.978	.276			
30,00mm (1.181") SHAFT					
50,75	51,00	10,00	S	*30X51X10★	32
1.998	2.008	.394			
51,75	52,00	8,00	S	*30X52X8★	32
2.037	2.047	.315			
51,75	52,00	10,00	S	*30X52X10★	32
2.037	2.047	.394			
51,75	52,00	11,00	S	*30X52X11★	32
2.037	2.047	.433			
51,75	52,00	12,00	S	*30X52X12★	32
2.037	2.047	.472			
30,00mm (1,181") SHAFT					
52,00	52,18	7,00	S	223035★	35
2.047	2.054	.276			
52,00	52,20	10,00	V	*30X52X10V★	32
2.047	2.055	.394			
52,00	52,23	7,00	S	30X52X7★	35
2.047	2.056	.276			
30,00mm (1.181") SHAFT					
53,75	54,00	9,00	S	*30X54X9★	32
2.116	2.126	.354			
30,00mm (1,181") SHAFT					
54,00	54,20	9,00	S	710267★	32
2.126	2.134	.354			
30,00mm (1.181") SHAFT					
54,75	55,00	8,00	S	*30X55X8★	32
2.155	2.165	.315			
54,75	55,00	11,00	S	*30X55X11★	32
2.155	2.165	.433			
54,75	55,00	12,00	S	*30X55X12★	32
2.155	2.165	.472			
30,00mm (1,181") SHAFT					
55,00	55,20	7,00	S	30X55X7★	47
2.165	2.173	.276			
55,00	55,20	10,00	V	*30X55X10V★	32
2.165	2.173	.394			
55,00	55,28	10,00	S	30X55X10★	35
2.165	2.176	.394			
30,00mm (1.181") SHAFT					
55,75	56,00	10,00	S	*30X56X10★	32
2.195	2.205	.394			
55,75	56,00	12,00	S	*30X56X12★	32
2.195	2.205	.472			
30,00mm (1,181") SHAFT					
56,00	56,20	8,00	S	30X56X8★	35
2.205	2.213	.315			

For Illustration and Material Data See Technical Section

Designed For A Specific Application - Not Recommended For General Use ➡ Hydrodynamic Lip Design-CW ⬅ Hydrodynamic Lip Design-CCW

* The U.S. customer service number is 877-4-TIMKEN. The Canadian customer service numbers are 800-565-4927 (English) and 800-565-0438 (French-Canadian). ★ Metric Seal

Hsg. Bore	Seal O.D.	Seal Width	Lip Mat'l	Part No.	Type/ Illus.
30,00mm (1.181") SHAFT					
56,75	*57,00*	*10,00*	*S*	*30X57X10★	32
2.234	2.244	.394			
57,75	*58,00*	*10,00*	*S*	*30X58X10★	32
2.273	2.283	.394			
30,00mm (1,181") SHAFT					
58,00	*58,09*	*9,50*	*N*	3907★⬅➡	57
2.283	2.287	.374			
58,00	*58,20*	*8,00*	*S*	*30X58X8★	32
2.283	2.291	.315			
58,00	*63,50*	*13,90*	*N*	*3607★⬅➡	57
2.283	2.500	.547			
30,00mm (1.181") SHAFT					
59,75	*60,00*	*7,00*	*S*	*30X60X7★	32
2.352	2.362	.276			
59,75	*60,00*	*10,00*	*S*	*30X60X10★	32
2.352	2.362	.394			
30,00mm (1,181") SHAFT					
60,00	*60,20*	*8,00*	*S*	*30X60X8★	32
2.362	2.370	.315			
30,00mm (1.181") SHAFT					
61,75	*62,00*	*5,00*	*S*	*30X62X5★	32
2.431	2.441	.197			
61,75	*62,00*	*8,00*	*S*	*30X62X8★	32
2.431	2.441	.315			
61,75	*62,00*	*9,00*	*S*	*30X62X9★	32
2.431	2.441	.354			
61,75	*62,00*	*10,00*	*S*	*30X62X10★	32
2.431	2.441	.394			
61,75	*62,00*	*11,00*	*S*	*30X62X11★	32
2.431	2.441	.433			
61,75	*62,00*	*12,00*	*S*	*30X62X12★	32
2.431	2.441	.472			
30,00mm (1,181") SHAFT					
62,00	*62,10*	*7,00*	*V*	*473049V★	47
2.441	2.445	.276			
62,00	*62,10*	*9,50*	*S*	*471353★	47
2.441	2.445	.374			
62,00	*62,15*	*6,35*	*S*	*43493★	4S
2.441	2.447	.250			
62,00	*62,20*	*7,00*	*V*	*30X62X7V★	35
2.441	2.449	.276			
62,00	*62,28*	*7,00*	*S*	30X62X7★	32
2.441	2.452	.276			
30,00mm (1.181") SHAFT					
64,75	*65,00*	*10,00*	*S*	*30X65X10★	32
2.549	2.559	.394			
30,00mm (1,181") SHAFT					
65,00	*65,20*	*8,00*	*S*	*30X65X8★	32
2.559	2.567	.315			
65,00	*65,23*	*34,00*	*S*	710065★	#
2.559	2.568	1.339			
30,00mm (1.181") SHAFT					
67,75	*68,00*	*10,00*	*S*	*30X68X10★	32
2.667	2.677	.394			
30,00mm (1,181") SHAFT					
68,00	*68,20*	*8,00*	*S*	*30X68X8★	32
2.677	2.685	.315			
70,00	*70,20*	*8,00*	*S*	*30X70X8★	32
2.756	2.764	.315			
30,00mm (1.181") SHAFT					
71,75	*72,00*	*8,00*	*S*	*30X72X8★	32
2.825	2.835	.315			
30,00mm (1,181") SHAFT					
72,00	*72,14*	*9,50*	*V*	*470442V★	47
2.835	2.840	.374			
72,00	*72,20*	*7,00*	*S*	30X72X7★	47
2.835	2.843	.276			
72,00	*72,20*	*8,00*	*V*	*30X72X8V★	32
2.835	2.843	.315			
72,00	*72,27*	*10,00*	*S*	30X72X10★	35
2.835	2.845	.394			
30,00mm (1.181") SHAFT					
74,75	*75,00*	*9,00*	*S*	*30X75X9★	32
2.943	2.953	.354			
74,75	*75,00*	*10,00*	*S*	*30X75X10★	32
2.943	2.953	.394			
76,72	*77,00*	*9,00*	*S*	*30X77X9★	32
3.020	3.031	.354			
76,72	*77,00*	*10,00*	*S*	*30X77X10★	32
3.020	3.031	.394			
79,72	*80,00*	*10,00*	*S*	*30X80X10★	32
3.139	3.150	.394			
1.187" (1-3/16") SHAFT					
–	–	–	S	800300	VRS1
–	**–**	**.313**		**99118**	**Redi-Sleeve**
1.627	1.635	.250	S	340817	34
1.686	1.690	.375	S	470328	47
1.686	1.690	.375	S	*480328	48
1.687	**1.691**	**.250**	**S**	**481213**	**48**
1.713	1.718	.500	S	*2551⬅	25
1.716	1.720	.248	S	9487	68
1.718	1.722	.550	S	*712133	#
1.752	**1.756**	**.250**	**S**	**473203**	**47**
1.752	1.756	.250	S	*483203	48
1.752	1.756	.312	S	*451708	45
1.752	1.756	.312	S	*481708	48
1.752	1.756	.375	S	*450868	45
1.828	**1.832**	**.375**	**S**	**473425**	**47**
1.828	1.832	.437	S	*410344	41
1.828	1.832	.437	S	*450344	45
1.828	1.832	.437	S	*470344	47
1.828	1.832	.437	S	*480344	48
1.874	**1.878**	**.250**	**S**	**472475**	**47**
1.874	1.878	.250	S	*482475	48
1.874	1.878	.437	S	*411456	41
1.874	1.878	.437	S	*451456	45
1.874	1.878	.437	S	*471456	47
1.874	1.878	.437	S	*481456	48
1.968	1.972	.468	S	*203055	203
1.983	1.987	.250	S	*471749	47
1.983	**1.987**	**.375**	**S**	**473426**	**47**
1.983	1.987	.437	S	*410047	41
1.983	1.987	.437	S	*450047	45
1.983	1.987	.437	S	*470047	47
1.983	1.987	.437	S	*480047	48
1.996	2.000	.250	S	40576S	4S
2.000	2.004	.250	S	40162S	4S
2.000	**2.004**	**.250**	**S**	**471765**	**47**
2.000	2.004	.250	N	*471765N	47

For Illustration and Material Data See Technical Section

Designed For A Specific Application - Not Recommended For General Use ⬅ Hydrodynamic Lip Design-CCW ⬅➡ Hydrodynamic Lip Design-Bidirectional

* The U.S. customer service number is 877-4-TIMKEN. The Canadian customer service numbers are 800-565-4927 (English) and 800-565-0438 (French-Canadian). ★ Metric Seal

Hsg. Bore	Seal O.D.	Seal Width	Lip Mat'l	Part No.	Type/ Illus.
1.187" (1-3/16") SHAFT (cont.)					
2.000	2.004	.250	S	*481765	48
2.000	2.004	.437	S	*410162	41
2.000	2.004	.437	N	*410162N	41
2.000	2.004	.437	S	*450162	45
2.000	2.004	.437	N	*450162N	45
2.000	2.004	.437	S	470162	47
2.000	2.004	.437	N	*470162N	47
2.000	2.004	.437	S	*480162	48
2.047	2.051	.250	S	43076S	4S
2.047	2.051	.437	S	453063	45
2.062	**2.066**	**.250**	**S**	**471354**	**47**
2.062	2.066	.250	S	*481354	48
2.062	2.066	.250	N	*481354N	48
2.062	2.066	.375	S	*452585	45
2.062	2.066	.375	S	*482585	48
2.062	2.066	.437	S	*410052	41
2.062	2.066	.437	S	*450052	45
2.062	2.066	.437	S	*470052	47
2.062	2.066	.437	S	*480052	48
2.125	**2.129**	**.250**	**S**	**473205**	**47**
2.125	2.129	.250	S	*483205	48
2.125	2.129	.375	S	*413293	41
2.125	2.129	.375	N	*413293N	41
2.125	2.129	.437	S	*410152	41
2.125	2.129	.437	N	*410152N	41
2.125	2.129	.437	S	*450152	45
2.125	2.129	.437	S	*470152	47
2.125	2.129	.437	S	*480152	48
2.165	**2.169**	**.250**	**S**	**472350**	**47**
2.165	2.169	.250	S	*482350	48
2.250	**2.254**	**.250**	**S**	**474255**	**47**
2.250	2.254	.500	S	*410336	41
2.250	2.254	.500	S	*450336	45
2.250	2.254	.500	H	*450336H	45
2.250	2.254	.500	S	470336	47
2.250	2.254	.500	S	*480336	48
2.437	**2.441**	**.250**	**S**	**474254**	**47**
2.437	2.441	.468	S	*450347	45
2.437	2.441	.468	S	470347	47
2.441	**2.445**	**.250**	**S**	**474256**	**47**
2.441	2.445	.375	S	472432	47
2.686	**2.690**	**.500**	**S**	**470946**	**47**
30,20mm (1.189") SHAFT					
–	–	–	S	800300	VRS1
–	**–**	**.313**		**99118**	**Redi-Sleeve**
42,00	*42,10*	*6,00*	*V*	710340★	44
1.654	1.657	.236			
1.190" SHAFT					
–	–	–	S	800300	VRS1
–	**–**	**.313**		**99118**	**Redi-Sleeve**
1.889	1.892	.651	V	*4748V⬅➡	#
1.969	1.975	.261	N	*4738N⬅➡	48
1.969	1.975	.312	V	*4738V⬅➡	48
2.122	2.128	.350	S	710068	#
30,50mm (1.201") SHAFT					
51,75	*52,00*	*8,00*	*S*	*30.5X52X8★	32
2.037	2.047	.315			
1.218" SHAFT					
–	–	–	S	800300	VRS1
–	**–**	**.315**		**99123**	**Redi-Sleeve**
1.968	1.972	.468	S	203016	203
1.979	1.983	.250	S	441319	44
1.979	1.983	.406	S	203025	203
1.218" SHAFT (cont.)					
1.983	**1.987**	**.437**	**S**	**450048**	**45**
2.000	**2.004**	**.437**	**S**	**450173**	**45**
2.062	2.066	.375	S	*454242	45
31,00mm (1.220") SHAFT					
–	–	–	S	800300	VRS1
–	–	–	S	800320	VRS1
–	–	–	S	800321	VRS2
–	–	–	V	800324	VRS1
–	**–**	**.315**		**99123**	**Redi-Sleeve**
42,00	*42,20*	*8,00*	*V*	710172★	35
1.654	1.661	.315			
44,00	*44,20*	*8,00*	*S*	31X44X8★	32
1.732	1.740	.315			
46,00	*46,20*	*8,00*	*N*	710332★⬅	32
1.811	1.819	.315			
46,00	*46,28*	*8,00*	*V*	1121★⬅	32
1.811	1.822	.315			
46,80	*47,00*	*10,00*	*S*	*31X47X10★	32
1.842	1.850	.394			
48,80	*49,00*	*7,00*	*S*	*31X49X7★	32
1.921	1.929	.276			
49,80	*50,00*	*8,00*	*S*	*31X50X8★	32
1.961	1.969	.315			
51,75	*52,00*	*6,00*	*S*	*31X52X6★	32
2.037	2.047	.236			
51,75	*52,00*	*7,00*	*S*	*31X52X7★	32
2.037	2.047	.276			
1.238" SHAFT					
–	–	–	S	800320	VRS1
–	–	–	S	800321	VRS2
–	–	–	V	800324	VRS1
–	**–**	**.315**		***99141**	**Redi-Sleeve**
2.250	2.254	.500	S	8293S	48
1.247" SHAFT					
–	–	–	S	800320	VRS1
–	–	–	S	800321	VRS2
–	–	–	V	800324	VRS1
–	**–**	**.313**		**99125**	**Redi-Sleeve**
–	2.633	.480	S	8429S	#
1.687	1.691	.312	S	6859S	33
1.250" (1-1/4") SHAFT					
–	–	–	S	800320	VRS1
–	–	–	S	800321	VRS2
–	–	–	V	800324	VRS1
–	**–**	**.313**		**99125**	**Redi-Sleeve**
1.250	1.838	.187	S	240949	24
1.499	1.505	.125	S	343186	34
1.499	1.509	.156	S	240736	24
1.625	**1.630**	**.188**	**S**	**251511**	**25**
1.685	1.691	.252	S	323126	32
1.686	1.690	.375	S	480356	48
1.686	1.690	.375	V	*480356V	48
1.686	1.691	.250	S	*473135	47
1.686	**1.691**	**.250**	**V**	**473135V**	**47**
1.686	**1.691**	**.250**	**S**	**474278**	**47**
1.686	1.691	.375	S	*330356	33
1.686	1.692	.219	S	353135	35
1.686	1.696	.218	S	340356	34
1.686	1.697	.187	S	240356	24
1.687	1.693	.250	S	322353	32
1.750	1.754	.250	H	*7412H	48
1.750	1.754	.250	S	7412S➡	48

For Illustration and Material Data See Technical Section
Designed For A Specific Application - Not Recommended For General Use ➡ Hydrodynamic Lip Design-CW ⬅ Hydrodynamic Lip Design-CCW
⬅➡ Hydrodynamic Lip Design-Bidirectional
* The U.S. customer service number is 877-4-TIMKEN. The Canadian customer service numbers are 800-565-4927 (English) and 800-565-0438 (French-Canadian). ★ Metric Seal

1.250" (1-1/4") SHAFT (cont.)

Hsg. Bore	Seal O.D.	Seal Width	Lip Mat'l	Part No.	Type/ Illus.
1.750	1.754	.250	S	*9674➡	48
1.750	1.754	.250	S	712025	#
1.750	1.754	.375	N	*481203N	48
1.750	1.756	.250	U	710014	#
1.752	1.756	.250	S	40140S	4S
1.752	**1.756**	**.250**	**S**	**471413**	**47**
1.752	1.756	.250	A	471413A	47
1.752	1.756	.250	N	*471413N	47
1.752	**1.756**	**.250**	**V**	**471413V**	**47**
1.752	1.756	.250	S	*481413	48
1.752	1.756	.250	V	*481413V	48
1.752	1.756	.300	S	*5683++	32
1.752	1.756	.312	S	*411709	41
1.752	1.756	.312	V	*411709V	41
1.752	1.756	.312	S	*451709	45
1.752	1.756	.312	H	*451709H	45
1.752	1.756	.312	S	471709	47
1.752	1.756	.312	H	*471709H	47
1.752	1.756	.312	N	*471709N	47
1.752	1.756	.312	V	*471709V	47
1.752	1.756	.312	S	*481709	48
1.752	1.756	.375	L	51083	5L
1.752	1.756	.375	S	*481083	48
1.752	1.756	.375	N	*481083N	48
1.752	1.756	.375	V	*481083V	48
1.752	1.756	.399	S	*5684++	32
1.752	1.756	.437	S	*450140	45
1.752	1.756	.437	N	*450140N	45
1.752	1.756	.437	S	*470140	47
1.752	1.756	.437	N	470140N	47
1.752	1.756	.437	N	*480140N	48
1.780	1.785	.468	S	*203045	203
1.812	1.817	.235	T	39713⬅➡	DW-H
1.874	1.878	.250	V	471737V	47
1.874	1.878	.250	S	*40683S	4S
1.874	**1.878**	**.250**	**S**	**471737**	**47**
1.874	1.878	.250	S	*481737	48
1.874	1.878	.250	V	*481737V	48
1.874	1.878	.375	S	*470683	47
1.874	1.878	.375	S	*480683	48
1.874	1.878	.437	S	*411246	41
1.874	1.878	.437	S	*471246	47
1.874	1.878	.437	S	*481246	48
1.955	1.960	.435	S	3199	48
1.968	1.972	.468	S	*204012	204
1.968	1.972	.468	S	6906S	204
1.968	1.972	.468	S	203012	203
1.979	1.983	.250	S	204507	204
1.979	1.983	.375	S	*470706	47
1.979	1.983	.406	S	203029	203
1.979	1.983	.406	S	204029	204
1.979	1.983	.468	S	*204024	204
1.983	1.987	.250	S	7781S	203
1.983	**1.987**	**.250**	**S**	**471750**	**47**
1.983	1.987	.250	A	471750A	47
1.983	**1.987**	**.250**	**V**	**471750V**	**47**
1.983	1.987	.250	S	*481750	48
1.983	1.987	.437	S	*410049	41
1.983	1.987	.437	S	*450049	45
1.983	1.987	.437	N	*450049N	45
1.983	1.987	.437	S	470049	47
1.983	1.987	.437	S	*480049	48
2.000	2.004	.250	S	40652S	4S
2.000	**2.004**	**.250**	**S**	**471766**	**47**
2.000	2.004	.250	A	471766A	47
2.000	**2.004**	**.250**	**V**	**471766V**	**47**
2.000	2.004	.250	S	*481766	48
2.000	2.004	.290	S	200338	200
2.000	2.004	.375	S	*450652	45
2.000	2.004	.375	H	*450652H	45
2.000	2.004	.375	V	*450652V	45
2.000	2.004	.375	S	*470652	47

1.250" (1-1/4") SHAFT (cont.)

Hsg. Bore	Seal O.D.	Seal Width	Lip Mat'l	Part No.	Type/ Illus.
2.000	2.004	.375	S	*480652	48
2.000	2.004	.437	V	470163V	47
2.000	2.004	.437	N	*3438N	#
2.000	2.004	.437	S	410163	41
2.000	2.004	.437	N	*410163N	41
2.000	2.004	.437	S	*450163	45
2.000	2.004	.437	N	*450163N	45
2.000	2.004	.437	S	470163	47
2.000	2.004	.437	N	*470163N	47
2.000	2.004	.437	S	*480163	48
2.031	2.035	.375	N	*471781N	47
2.047	**2.051**	**.375**	**S**	**473551**	**47**
2.062	2.066	.250	V	471787V	47
2.062	2.066	.250	S	41787S	4S
2.062	2.066	.250	S	*451787	45
2.062	**2.066**	**.250**	**S**	**471787**	**47**
2.062	2.066	.250	A	471787A	47
2.062	2.066	.250	S	*481787	48
2.062	2.066	.250	N	*481787N	48
2.062	2.066	.375	S	*451134	45
2.062	2.066	.375	S	*481134	48
2.062	2.066	.437	S	*410244	41
2.062	2.066	.437	S	*450244	45
2.062	2.066	.437	N	*450244N	45
2.062	2.066	.437	S	470244	47
2.062	2.066	.437	S	*480244	48
2.106	2.110	.468	S	*410177	41
2.106	2.110	.468	S	450177	45
2.125	2.129	.250	V	471795V	47
2.125	**2.129**	**.250**	**S**	**471795**	**47**
2.125	2.129	.250	N	471795N	47
2.125	2.129	.250	S	*481795	48
2.125	2.129	.268	V	*470368V	47
2.125	2.129	.437	S	*410245	41
2.125	2.129	.437	S	*450245	45
2.125	2.129	.437	N	*450245N	45
2.125	2.129	.437	S	470245	47
2.125	2.129	.437	S	*480245	48
2.126	2.130	.375	N	482230N	48
2.133	2.137	.313	S	*1070	35
2.250	2.254	.250	S	42081S	4S
2.250	2.254	.435	S	7686S	25
2.250	2.254	.500	S	*410165	41
2.250	2.254	.500	S	*450165	45
2.250	2.254	.500	H	*450165H	45
2.250	2.254	.500	S	470165	47
2.250	2.254	.500	S	*480165	48
2.252	**2.256**	**.375**	**S**	**471801**	**47**
2.252	2.256	.375	H	*471801H	47
2.252	2.256	.375	S	*481801	48
2.252	2.256	.375	N	*481801N	48
2.374	**2.378**	**.375**	**S**	**471808**	**47**
2.374	2.378	.375	S	*481808	48
2.374	2.378	.500	S	*410559	41
2.374	2.378	.500	S	*450559	45
2.374	2.378	.500	S	*470559	47
2.374	2.378	.500	S	*480559	48
2.398	2.402	.228	S	710101⬅➡	#
2.437	2.441	.250	S	*453760	45
2.437	**2.441**	**.375**	**S**	**471818**	**47**
2.437	2.441	.375	S	*481818	48
2.437	2.441	.468	S	*410481	41
2.437	2.441	.468	S	*450481	45
2.437	2.441	.468	S	*470481	47
2.437	2.441	.468	S	*480481	48
2.441	**2.445**	**.375**	**S**	**471407**	**47**
2.441	2.445	.375	S	*481407	48
2.502	**2.506**	**.375**	**S**	**471833**	**47**
2.502	2.506	.375	S	*481833	48
2.502	2.506	.500	S	*411842	41
2.561	2.565	.500	N	471845N	47
2.561	**2.565**	**.500**	**S**	**451845**	**45**

For Illustration and Material Data See Technical Section
Designed For A Specific Application - Not Recommended For General Use ➡ Hydrodynamic Lip Design-CW ⬅➡ Hydrodynamic Lip Design-Bidirectional
++ Not Sold Separately
* The U.S. customer service number is 877-4-TIMKEN. The Canadian customer service numbers are 800-565-4927 (English) and 800-565-0438 (French-Canadian).

Hsg. Bore	Seal O.D.	Seal Width	Lip Mat'l	Part No.	Type/ Illus.
1.250" (1-1/4") SHAFT (cont.)					
2.686	2.690	.375	S	481859	48
2.713	2.717	.468	S	*410341	41
2.713	**2.717**	**.468**	**S**	**450341**	**45**
2.835	2.839	.468	S	*410806	41
2.835	2.839	.468	S	*450806	45
2.835	**2.839**	**.468**	**S**	**470806**	**47**
2.835	2.839	.468	S	*480806	48
2.877	**2.881**	**.250**	**S**	**472536**	**47**
3.150	3.155	.375	S	*472651	47
3.150	3.155	.375	V	472651V	47
3.155	**3.160**	**.500**	**S**	**453279**	**45**
32,00mm (1.260") SHAFT					
–	–	–	S	800320	VRS1
–	–	–	S	800321	VRS2
–	–	–	V	800324	VRS1
–	**–**	**.315**		**99128**	**Redi-Sleeve**
39,80	*40,00*	*7,00*	*S*	*32X40X7★	32
1.567	1.575	.276			
39,80	*40,00*	*10,00*	*S*	*32X40X10★	32
1.567	1.575	.394			
40,00	*40,15*	*5,00*	*S*	223210★	34
1.575	1.581	.197			
40,80	*41,00*	*7,00*	*S*	*32X41X7★	32
1.606	1.614	.276			
41,80	*42,00*	*6,00*	*S*	*32X42X6★	32
1.646	1.654	.236			
42,00	*42,20*	*7,00*	*S*	32X42X7★	35
1.654	1.661	.276			
42,00	*42,20*	*8,00*	*S*	32X42X8★	32
1.654	1.661	.315			
42,00	*42,20*	*8,00*	*S*	710282★	32
1.654	1.661	.315			
42,00	*42,20*	*10,00*	*S*	223215★⬅	32
1.654	1.661	.394			
43,00	*43,20*	*7,00*	*S*	32X43X7★	32
1.693	1.701	.276			
43,00	*43,20*	*7,00*	*S*	710370★	32
1.693	1.701	.276			
43,00	*43,28*	*4,00*	*N*	*4596★	35
1.693	1.704	.157			
43,80	*44,00*	*5,00*	*S*	*32X44X5★	32
1.724	1.732	.197			
43,80	*44,00*	*6,00*	*S*	*32X44X6★	32
1.724	1.732	.236			
43,80	*44,00*	*7,00*	*S*	*32X44X7★	32
1.724	1.732	.276			
43,80	*44,00*	*8,00*	*S*	*32X44X8★	32
1.724	1.732	.315			
43,80	*44,00*	*8,00*	*S*	*32X44X8★	32
1.724	1.732	.315			
43,80	*44,00*	*9,00*	*S*	*32X44X9★	32
1.724	1.732	.354			
43,80	*44,00*	*10,00*	*S*	*32X44X10★	32
1.724	1.732	.394			
44,00	*44,23*	*6,00*	*N*	223220★➡	32
1.732	1.741	.236			
44,30	*44,50*	*8,00*	*S*	*32X44.5X8★	32
1.744	1.752	.315			
44,30	*44,50*	*10,00*	*S*	*32X44.5X10★	32
1.744	1.752	.394			
44,80	*45,00*	*6,00*	*S*	*32X45X6★	32
1.764	1.772	.236			
44,80	*45,00*	*6,50*	*S*	*32X45X6.5★	32
1.764	1.772	.256			
44,80	*45,00*	*8,00*	*S*	*32X45X8★	32
1.764	1.772	.315			
44,80	*45,00*	*10,00*	*S*	*32X45X10★	32
1.764	1.772	.394			
45,00	*45,21*	*6,00*	*V*	320348★➡	32
1.772	1.780	.236			
32,00mm (1.260") SHAFT (cont.)					
45,00	*45,23*	*7,00*	*S*	223230★	32
1.772	1.781	.276			
45,00	*45,23*	*7,00*	*S*	32X45X7★	32
1.772	1.781	.276			
45,80	*46,00*	*7,00*	*S*	*32X46X7★	32
1.803	1.811	.276			
45,80	*46,00*	*8,00*	*S*	*32X46X8★	32
1.803	1.811	.315			
46,00	*46,20*	*6,00*	*N*	*324115N★	32
1.811	1.819	.236			
46,00	*46,23*	*6,00*	*S*	32X46X6★	32
1.811	1.820	.236			
46,00	*46,23*	*6,00*	*N*	223235★	32
1.811	1.820	.236			
46,80	*47,00*	*6,00*	*S*	*32X47X6★	32
1.842	1.850	.236			
46,80	*47,00*	*8,00*	*S*	*32X47X8★	32
1.842	1.850	.315			
46,80	*47,00*	*10,00*	*S*	*32X47X10★	32
1.842	1.850	.394			
47,00	*47,20*	*6,00*	*N*	710310★➡	32
1.850	1.858	.236			
47,00	*47,20*	*7,00*	*V*	*32X47X7V★	32
1.850	1.858	.276			
47,00	*47,20*	*8,00*	*S*	*580387★➡	32
1.850	1.858	.315			
47,00	*47,23*	*7,00*	*S*	32X47X7★	35
1.850	1.859	.276			
47,00	*47,24*	*10,00*	*N*	3476★➡	32
1.850	1.860	.394			
47,80	*48,00*	*7,00*	*S*	*32X48X7★	32
1.882	1.890	.276			
47,80	*48,00*	*10,00*	*S*	*32X48X10★	32
1.882	1.890	.394			
48,00	*48,20*	*7,00*	*S*	710327★➡	32
1.890	1.898	.276			
48,00	*48,20*	*8,00*	*S*	32X48X8★	32
1.890	1.898	.315			
48,00	*48,20*	*8,00*	*V*	*32X48X8V★	35
1.890	1.898	.315			
48,00	*48,20*	*9,00*	*N*	223240★	40
1.890	1.898	.354			
48,00	*48,20*	*10,00*	*S*	710317★⬅	32
1.890	1.898	.394			
49,80	*50,00*	*7,00*	*S*	*32X50X7★	32
1.961	1.969	.276			
49,80	*50,00*	*10,00*	*S*	*32X50X10★	32
1.961	1.969	.394			
50,00	*50,14*	*8,00*	*V*	710164★	48
1.969	1.974	.315			
50,00	*50,20*	*10,00*	*V*	*32X50X10V★	35
1.969	1.976	.394			
50,00	***50,23***	***8,00***	**S**	**32X50X8★**	**35**
1.969	**1.978**	**.315**			
50,00	*50,23*	*8,00*	*S*	223250★➡	32
1.969	1.978	.315			
50,00	*50,23*	*8,00*	*S*	710415★➡	32
1.969	1.978	.315			
51,75	*52,00*	*8,00*	*S*	*32X52X8★	32
2.037	2.047	.315			
51,75	*52,00*	*10,00*	*S*	*32X52X10★	32
2.037	2.047	.394			
51,75	*52,00*	*11,00*	*S*	*32X52X11★	32
2.037	2.047	.433			
51,75	*52,00*	*12,00*	*S*	*32X52X12★	32
2.037	2.047	.472			
52,00	*52,20*	*7,00*	*V*	*32X52X7V★	35
2.047	2.055	.276			
52,00	*52,20*	*10,00*	*S*	710306★⬅	32
2.047	2.055	.394			
52,00	*52,25*	*11,00*	*N*	1167★	32
2.047	2.057	.433			

For Illustration and Material Data See Technical Section

➡ Hydrodynamic Lip Design-CW ⬅ Hydrodynamic Lip Design-CCW

* The U.S. customer service number is 877-4-TIMKEN. The Canadian customer service numbers are 800-565-4927 (English) and 800-565-0438 (French-Canadian). ★ Metric Seal

Hsg. Bore	Seal O.D.	Seal Width	Lip Mat'l	Part No.	Type/ Illus.
32,00mm (1.260") SHAFT (cont.)					
52,00	*52,28*	*7,00*	*S*	32X52X7★	32
2.047	2.058	.276			
52,00	*52,28*	*7,00*	*S*	223255★	35
2.047	2.058	.276			
52,00	*52,28*	*11,00*	*N*	223252★⬅	32
2.047	2.058	.433			
52,75	*53,00*	*7,00*	*S*	⋆32X53X7★	32
2.077	2.087	.276			
53,00	*53,28*	*7,00*	*N*	223253★➡	32
2.087	2.098	.276			
53,75	*54,00*	*8,00*	*S*	⋆32X54X8★	32
2.116	2.126	.315			
54,00	*54,20*	*10,00*	*S*	2008★&	#
2.126	2.134	.394			
54,00	*54,23*	*10,00*	*S*	32X54X10★	32
2.126	2.135	.394			
54,75	*55,00*	*6,50*	*S*	⋆32X55X6.5★	32
2.155	2.165	.256			
54,75	*55,00*	*7,00*	*S*	⋆32X55X7★	32
2.155	2.165	.276			
54,75	*55,00*	*8,00*	*S*	⋆32X55X8★	32
2.155	2.165	.315			
54,75	*55,00*	*10,00*	*S*	⋆32X55X10★	32
2.155	2.165	.394			
54,75	*55,00*	*11,00*	*S*	⋆32X55X11★	32
2.155	2.165	.433			
55,75	*56,00*	*8,00*	*S*	⋆32X56X8★	32
2.195	2.205	.315			
56,00	*56,28*	*10,00*	*S*	32X56X10★	32
2.205	2.216	.394			
57,75	*58,00*	*10,00*	*S*	⋆32X58X10★	32
2.273	2.283	.394			
57,75	*58,00*	*12,00*	*S*	⋆32X58X12★	32
2.273	2.283	.472			
58,00	*58,20*	*8,00*	*S*	32X58X8★	32
2.283	2.291	.315			
58,00	*58,29*	*12,70*	*S*	⋆1204★	32
2.283	2.295	.500			
60,00	*60,20*	*8,00*	*S*	32X60X8★	32
2.362	2.370	.315			
60,00	*60,20*	*10,00*	*S*	32X60X10★	48
2.362	2.370	.394			
61,75	*62,00*	*10,00*	*S*	⋆32X62X10★	32
2.431	2.441	.394			
61,75	*62,00*	*12,00*	*S*	⋆32X62X12★	32
2.431	2.441	.472			
62,00	*62,20*	*8,00*	*S*	32X62X8★	32
2.441	2.449	.315			
64,75	*65,00*	*7,50*	*S*	⋆32X65X7.5★	32
2.549	2.559	.295			
64,75	*65,00*	*8,00*	*S*	⋆32X65X8★	32
2.549	2.559	.315			
64,75	*65,00*	*10,00*	*S*	⋆32X65X10★	32
2.549	2.559	.394			
69,75	*70,00*	*8,00*	*S*	⋆32X70X8★	32
2.746	2.756	.315			
69,75	*70,00*	*11,00*	*S*	⋆32X70X11★	32
2.746	2.756	.433			
71,75	*72,00*	*10,00*	*S*	⋆32X72X10★	32
2.825	2.835	.394			
72,00	*72,20*	*8,00*	*S*	32X72X8★	32
2.835	2.843	.315			
1.281" (1-9/32") SHAFT					
–	–	–	S	800320	VRS1
–	–	–	S	800321	VRS2
–	–	–	V	800324	VRS1
1.752	1.756	.375	S	51032S	5S
1.983	1.987	.437	S	⋆450050	45
1.983	1.987	.437	S	470050	47
1.997	2.005	.375	S	⋆350878	35

Hsg. Bore	Seal O.D.	Seal Width	Lip Mat'l	Part No.	Type/ Illus.
1.281" (1-9/32") SHAFT (cont.)					
2.000	**2.004**	**.375**	**S**	**473424**	**47**
2.000	2.004	.437	S	⋆450164	45
2.000	2.006	.250	S	353137	35
2.062	2.066	.437	S	⋆450124	45
33,00mm (1.299") SHAFT					
–	–	–	S	800320	VRS1
–	–	–	S	800321	VRS2
–	–	–	V	800324	VRS1
43,80	*44,00*	*7,00*	*S*	⋆33X44X7★	32
1.724	1.732	.276			
43,80	*44,00*	*8,00*	*S*	⋆33X44X8★	32
1.724	1.732	.315			
44,00	*44,18*	*7,00*	*S*	710070★	47
1.732	1.739	.276			
44,80	*45,00*	*8,00*	*S*	⋆33X45X8★	32
1.764	1.772	.315			
44,80	*45,00*	*10,00*	*S*	⋆33X45X10★	32
1.764	1.772	.394			
1.779	1.784	.256	T	39879⬅➡	FW-H
45,80	*46,00*	*7,00*	*S*	⋆33X46X7★	32
1.803	1.811	.276			
46,43	*46,53*	*9,53*	*N*	6370N★	33
1.828	1.832	.375			
46,80	*47,00*	*8,00*	*S*	⋆33X47X8★	32
1.842	1.850	.315			
47,00	*47,20*	*8,00*	*S*	223340★➡	32
1.850	1.858	.315			
47,10	*47,30*	*7,00*	*S*	⋆33X47.3X7★	32
1.854	1.862	.276			
47,80	*48,00*	*6,00*	*S*	⋆33X48X6★	32
1.882	1.890	.236			
47,80	*48,00*	*8,00*	*S*	⋆33X48X8★	32
1.882	1.890	.315			
49,00	*49,23*	*8,00*	*N*	710236★➡	32
1.929	1.938	.315			
49,80	*50,00*	*6,00*	*S*	⋆33X50X6★	32
1.961	1.969	.236			
49,80	*50,00*	*7,00*	*S*	⋆33X50X7★	32
1.961	1.969	.276			
49,80	*50,00*	*10,00*	*S*	⋆33X50X10★	32
1.961	1.969	.394			
50,00	*50,20*	*7,00*	*S*	710328★	35
1.969	1.976	.276			
50,00	*50,25*	*12,00*	*S*	33X50X12★	32
1.969	1.978	.472			
50,00	*50,25*	*12,00*	*S*	1168★	32
1.969	1.978	.472			
56,00	*56,23*	*8,00*	*N*	710132★	#
2.008	2.214	.315			
51,75	*52,00*	*5,00*	*S*	⋆33X52X5★	32
2.037	2.047	.197			
51,75	*52,00*	*10,00*	*S*	⋆33X52X10★	32
2.037	2.047	.394			
51,92	*52,02*	*12,45*	*S*	3348★⬅➡	47
2.044	2.048	.490			
52,00	*52,25*	*6,00*	*S*	33X52X6★	32
2.047	2.057	.236			
54,75	*55,00*	*10,00*	*S*	⋆33X55X10★	32
2.155	2.165	.394			
55,75	*56,00*	*10,00*	*S*	⋆33X56X10★	32
2.195	2.205	.394			
55,75	*56,00*	*12,00*	*S*	⋆33X56X12★	32
2.195	2.205	.472			
59,00	*59,20*	*17,00*	*N*	710124★	#
2.323	2.331	.669			
61,75	*62,00*	*7,00*	*S*	⋆33X62X7★	32
2.431	2.441	.276			
71,75	*72,00*	*10,00*	*S*	⋆33X72X10★	32
2.825	2.835	.394			

For Illustration and Material Data See Technical Section
Designed For A Specific Application - Not Recommended For General Use ➡ Hydrodynamic Lip Design-CW ⬅ Hydrodynamic Lip Design-CCW
⬅➡ Hydrodynamic Lip Design-Bidirectional & Flanged O.D.
⋆ The U.S. customer service number is 877-4-TIMKEN. The Canadian customer service numbers are 800-565-4927 (English) and 800-565-0438 (French-Canadian). ★ Metric Seal

Hsg. Bore	Seal O.D.	Seal Width	Lip Mat'l	Part No.	Type/ Illus.
33,00mm (1.299") SHAFT (cont.)					
89,90	*89,60*	*40,00*	*N*	5210★⑤	35
3.539	3.528	1.575			
1.301" SHAFT					
–	–	–	S	800350	VRS1
–	–	–	V	800354	VRS1
–	–	–	V	800355	VRS2
2.000	**2.004**	**.437**	**S**	**471193**	**47**
2.000	2.004	.437	N	471193N	47
2.000	2.004	.437	N	∗481193N	48
2.620	2.625	.315	S	710043	#
1.312" (1-5/16") SHAFT					
–	–	–	S	800350	VRS1
–	–	–	V	800354	VRS1
–	–	–	V	800355	VRS2
–	**–**	**.250**		**99129**	**Redi-Sleeve**
–	**–**	**.500**		**99131**	**Redi-Sleeve**
1.625	1.662	.156	N	722108	VRS1
1.627	.000	.331	S	710455	#
1.750	1.758	.250	S	∗342214	34
1.752	1.760	.187	S	240716	24
1.828	1.833	.250	T	39904⑤	FF
1.874	**1.878**	**.375**	**S**	**473423**	**47**
1.874	1.878	.437	S	∗410521	41
1.874	1.878	.437	S	∗450521	45
1.874	1.878	.437	S	∗470521	47
1.874	1.878	.437	S	∗480521	48
1.983	**1.987**	**.375**	**S**	**473422**	**47**
1.983	1.987	.437	S	∗471755	47
2.000	2.004	.250	S	∗43093S	4S
2.000	**2.004**	**.312**	**S**	**473210**	**47**
2.000	2.004	.312	V	∗473210V	47
2.000	2.004	.375	S	∗470561	47
2.000	2.004	.375	S	∗480561	48
2.000	2.004	.437	S	∗411352	41
2.062	**2.066**	**.312**	**S**	**472826**	**47**
2.062	2.066	.375	S	∗484178	48
2.062	2.066	.437	S	∗410129	41
2.062	2.066	.437	S	470129	47
2.062	2.066	.437	S	∗480129	48
2.097	2.105	.375	F	∗712135	#
2.106	**2.110**	**.375**	**S**	**473421**	**47**
2.106	2.110	.468	S	∗410179	41
2.106	2.110	.468	S	∗450179	45
2.125	**2.129**	**.312**	**S**	**473211**	**47**
2.125	2.129	.437	S	∗410247	41
2.125	2.129	.437	N	∗410247N	41
2.125	2.129	.437	S	∗450247	45
2.125	2.129	.437	S	∗470247	47
2.125	2.129	.437	S	∗480247	48
2.166	2.170	.375	S	473812	47
2.250	**2.254**	**.312**	**S**	**473212**	**47**
2.250	2.254	.312	A	473212A	47
2.250	2.254	.500	S	∗410167	41
2.250	2.254	.500	S	∗450167	45
2.250	2.254	.500	S	∗470167	47
2.250	2.254	.500	S	∗480167	48
2.282	2.286	.250	S	40769S	4S
2.374	2.378	.250	S	∗40053S	4S
2.374	**2.378**	**.312**	**S**	**473213**	**47**
2.374	2.378	.500	S	∗410053	41
2.374	2.378	.500	S	∗450053	45
2.374	2.378	.500	S	∗470053	47
2.374	2.378	.500	S	∗480053	48
2.437	2.441	.468	S	∗410503	41
2.437	2.441	.468	S	∗450503	45
2.437	2.441	.468	S	470503	47
2.437	2.441	.468	S	∗480503	48

Hsg. Bore	Seal O.D.	Seal Width	Lip Mat'l	Part No.	Type/ Illus.
1.312" (1-5/16") SHAFT (cont.)					
2.502	2.506	.375	S	481834	48
2.750	2.754	.500	S	∗481901	48
2.835	**2.839**	**.468**	**S**	**471904**	**47**
2.875	2.879	.437	S	∗451905	45
2.996	3.001	.500	S	450147	45
1.318" SHAFT					
–	–	–	S	800350	VRS1
–	–	–	V	800354	VRS1
–	–	–	V	800355	VRS2
2.280	2.286	.906	S	5131⬅➡	#
2.620	2.625	.875	S	2300	#
1.322" SHAFT					
–	–	–	S	800350	VRS1
–	–	–	V	800354	VRS1
–	–	–	V	800355	VRS2
2.227	**2.231**	**.375**	**S**	**484058**	**48**
1.326" SHAFT					
–	–	–	S	800350	VRS1
–	–	–	V	800354	VRS1
–	–	–	V	800355	VRS2
2.061	**2.065**	**.375**	**S**	**484054**	**48**
2.226	2.231	.500	S	∗3145	#
2.226	2.247	.500	S	5124	48
2.312	2.316	.435	S	9161	48
34,00mm (1.339") SHAFT					
–	–	–	S	800350	VRS1
–	–	–	V	800354	VRS1
–	–	–	V	800355	VRS2
–	**–**	**.500**		**99134**	**Redi-Sleeve**
41,80	*42,00*	*5,00*	*S*	∗34X42X5★	32
1.646	1.654	.197			
43,80	*44,00*	*7,00*	*S*	∗34X44X7★	32
1.724	1.732	.276			
43,80	*44,00*	*8,00*	*S*	∗34X44X8★	32
1.724	1.732	.315			
44,00	*44,23*	*8,00*	*N*	223400★	32
1.732	1.741	.315			
45,00	*45,20*	*8,00*	*S*	34X45X8★	32
1.772	1.780	.315			
45,80	*46,00*	*8,00*	*S*	∗34X46X8★	32
1.803	1.811	.315			
46,80	*47,00*	*8,00*	*S*	∗34X47X8★	32
1.842	1.850	.315			
46,80	*47,00*	*9,00*	*S*	∗34X47X9★	32
1.842	1.850	.354			
47,80	*48,00*	*7,00*	*S*	∗34X48X7★	32
1.882	1.890	.276			
47,80	*48,00*	*8,00*	*S*	∗34X48X8★	32
1.882	1.890	.315			
48,00	*48,20*	*7,00*	*S*	∗580388★➡	32
1.890	1.898	.276			
48,00	*48,28*	*7,50*	*S*	710416★	35
1.890	1.901	.295			
48,00	*48,28*	*7,50*	*S*	223410★	35
1.890	1.901	.295			
48,00	*48,28*	*8,00*	*N*	223420★➡	32
1.890	1.901	.315			
49,80	*50,00*	*7,00*	*S*	∗34X50X7★	32
1.961	1.969	.276			
49,80	*50,00*	*8,00*	*S*	∗34X50X8★	32
1.961	1.969	.315			
49,80	*50,00*	*10,00*	*S*	∗34X50X10★	32
1.961	1.969	.394			

For Illustration and Material Data See Technical Section
Designed For A Specific Application - Not Recommended For General Use ➡ Hydrodynamic Lip Design-CW ⬅➡ Hydrodynamic Lip Design-Bidirectional
⑤ Seal & Installation Sleeve
∗ The U.S. customer service number is 877-4-TIMKEN. The Canadian customer service numbers are 800-565-4927 (English) and 800-565-0438 (French-Canadian). ★ Metric Seal

Hsg. Bore	Seal O.D.	Seal Width	Lip Mat'l	Part No.	Type/ Illus.
34,00mm (1.339") SHAFT (cont.)					
49,80	*50,00*	*12,00*	*S*	*34X50X12★	32
1.961	1.969	.472			
50,00	*50,20*	*8,00*	*N*	223430★➡	35
1.969	1.976	.315			
50,00	*50,20*	*8,00*	*N*	710417★	35
1.969	1.976	.315			
51,75	*52,00*	*10,00*	*S*	*34X52X10★	32
2.037	2.047	.394			
51,75	*52,00*	*11,00*	*S*	*34X52X11★	32
2.037	2.047	.433			
52,00	*52,28*	*8,00*	*S*	34X52X8★	32
2.047	2.058	.315			
52,75	*53,00*	*8,00*	*S*	*34X53X8★	32
2.077	2.087	.315			
53,00	*53,28*	*8,00*	*N*	710418★	32
2.087	2.098	.315			
53,00	*53,28*	*8,00*	*N*	223440★	32
2.087	2.098	.315			
53,75	*54,00*	*8,00*	*S*	*34X54X8★	32
2.116	2.126	.315			
54,00	*54,20*	*9,00*	*S*	34X54X9★	35
2.126	2.134	.354			
54,00	*54,25*	*9,00*	*N*	710110★⬅➡	40
2.126	2.136	.354			
54,75	*55,00*	*11,00*	*S*	*34X55X11★	32
2.155	2.165	.433			
55,00	*55,20*	*9,00*	*S*	34X55X9★	32
2.165	2.173	.354			
56,00	*56,20*	*8,00*	*S*	*34X56X8★	32
2.205	2.213	.315			
57,75	*58,00*	*10,00*	*S*	*34X58X10★	32
2.273	2.283	.394			
58,00	*58,20*	*8,00*	*S*	*34X58X8★	32
2.283	2.291	.315			
60,00	*60,20*	*8,00*	*S*	*34X60X8★	32
2.362	2.370	.315			
61,75	*62,00*	*7,00*	*S*	*34X62X7★	32
2.431	2.441	.276			
61,75	*62,00*	*14,00*	*S*	*34X62X14★	32
2.431	2.441	.551			
62,00	*62,18*	*10,00*	*S*	34X62X10★	35
2.441	2.448	.394			
62,00	*62,20*	*10,00*	*S*	710422★	35
2.441	2.449	.394			
62,00	*62,20*	*10,00*	*S*	223462★	35
2.441	2.449	.394			
63,00	*63,09*	*9,00*	*N*	710109★⬅➡	40
2.480	2.484	.354			
65,00	*65,10*	*12,00*	*S*	710151★	47
2.559	2.563	.472			
69,75	*70,00*	*10,00*	*S*	*34X70X10★	32
2.746	2.756	.394			
71,75	*72,00*	*10,00*	*S*	*34X72X10★	32
2.825	2.835	.394			
71,75	*72,00*	*12,00*	*S*	*34X72X12★	32
2.825	2.835	.472			
1.340" SHAFT					
.000	1.910	.275	T	710515	32
1.343" (1-11/32") SHAFT					
–	–	–	S	800350	VRS1
–	–	–	V	800354	VRS1
–	–	–	V	800355	VRS2
2.106	2.110	.312	N	*413697N	41
2.106	2.110	.375	S	473435	47
2.106	2.110	.468	S	*450180	45
2.125	2.129	.375	S	473436	47
2.125	2.129	.437	S	*450248	45
2.125	2.129	.437	S	*480248	48

Hsg. Bore	Seal O.D.	Seal Width	Lip Mat'l	Part No.	Type/ Illus.
1.343" (1-11/32") SHAFT (cont.)					
2.374	2.378	.500	S	450054	45
2.441	2.445	.375	S	483793	48
1.350" SHAFT					
–	–	–	S	800350	VRS1
–	–	–	V	800354	VRS1
–	–	–	V	800355	VRS2
1.620	1.625	.355	S	710076	#
2.502	2.506	.500	S	*453309	45
2.571	2.575	.706	S	8594S	62
34,50mm (1.358") SHAFT					
–	–	–	S	800350	VRS1
–	–	–	V	800354	VRS1
–	–	–	V	800355	VRS2
71,00	*71,10*	*42,00*	*N*	710250★	#
2.795	2.799	1.654			
1.362" SHAFT					
–	–	–	S	800350	VRS1
–	–	–	V	800354	VRS1
–	–	–	V	800355	VRS2
2.191	2.195	.250	S	8133S	48
2.241	2.249	.250	S	*341518	34
2.241	2.249	.250	S	*351518	35
1.365" SHAFT					
–	–	–	S	800350	VRS1
–	–	–	V	800354	VRS1
–	–	–	V	800355	VRS2
1.955	1.960	.435	S	3214	48
2.081	2.085	.435	S	*8883	48
2.081	2.085	.435	S	51322	5S
2.259	2.264	.435	S	9569S	99
2.374	2.379	.435	S	9568	48
1.370" SHAFT					
1.375	2.438	.250	S	*715101%	#
1.372" SHAFT					
–	–	–	S	800350	VRS1
–	–	–	V	800354	VRS1
–	–	–	V	800355	VRS2
-	**-**	**.313**		**99133**	**Redi-Sleeve**
-	**-**	**.500**		**99138**	**Redi-Sleeve**
–	4.560	.480	S	8549S&	#
2.250	2.515	1.197	S	7715S	#
1.375" (1-3/8") SHAFT					
–	–	–	S	800350	VRS1
–	–	–	V	800354	VRS1
–	–	–	V	800355	VRS2
-	**-**	**.313**		**99133**	**Redi-Sleeve**
-	**-**	**.500**		**99138**	**Redi-Sleeve**
-	**-**	**.512**		**99139**	**Redi-Sleeve**
–	4.582	.259	S	8676S	54
–	4.582	.259	S	9344S	54
1.750	1.756	.187	S	340853	34
1.828	1.832	.375	S	*330480	33
1.828	1.832	.375	N	*330480N	33
1.828	**1.834**	**.250**	**S**	**323138**	**32**
1.828	1.839	.255	S	*6622	34
1.829	1.837	.187	S	6597S	34

For Illustration and Material Data See Technical Section
Designed For A Specific Application - Not Recommended For General Use ➡ Hydrodynamic Lip Design-CW ⬅➡ Hydrodynamic Lip Design-Bidirectional % External Bore
& Flanged O.D. * The U.S. customer service number is 877-4-TIMKEN. The Canadian customer service numbers are 800-565-4927 (English) and 800-565-0438 (French-Canadian).
★ Metric Seal

1.375" (1-3/8") SHAFT (cont.)

Hsg. Bore	Seal O.D.	Seal Width	Lip Mat'l	Part No.	Type/ Illus.
1.874	1.878	.250	V	472354V	47
1.874	1.878	.250	L	40395	4L
1.874	**1.878**	**.250**	**S**	**472354**	**47**
1.874	1.878	.312	S	330663	33
1.874	1.878	.312	N	*330663N	33
1.874	1.878	.437	S	50395S	5S
1.874	**1.879**	**.240**	**V**	**484156V**	**48**
1.874	1.879	.250	S	40395S	4S
1.874	1.880	.250	S	352354	32
1.875	1.878	.187	S	6668S	33
1.947	1.951	.500	S	1097	33
1.947	1.951	.500	S	1097N	33
1.952	1.957	.500	N	2443⬅	25
1.981	1.989	.252	N	714655➡	48
1.982	1.989	.192	N	4638N	#
1.982	1.989	.312	N	*4655N➡	48
1.983	1.987	.312	S	482163	48
1.983	**1.987**	**.312**	**N**	**482163N**	**48**
1.983	1.987	.375	S	*483562	48
1.983	1.987	.375	N	*483562N	48
2.000	2.004	.250	S	40522S	4S
2.000	2.004	.300	S	*472083	47
2.000	**2.004**	**.312**	**S**	**472258**	**47**
2.000	2.004	.312	A	472258A	47
2.000	2.004	.312	N	*472258N	47
2.000	**2.004**	**.312**	**V**	**472258V**	**47**
2.000	2.004	.312	S	*482258	48
2.000	2.004	.312	V	482258V	48
2.000	2.004	.320	S	5872S	45
2.000	2.004	.328	S	480570	48
2.000	2.004	.375	S	*6340	45
2.000	2.004	.375	S	*411268	41
2.000	2.004	.375	N	*411268N	41
2.000	2.004	.375	H	*451268H	45
2.000	2.004	.375	S	471268	47
2.000	2.004	.375	N	471268N	47
2.000	2.004	.375	V	*471268V	47
2.000	2.004	.375	S	*481268	48
2.000	2.004	.375	V	*481268V	48
2.000	2.004	.437	S	*410522	41
2.000	2.004	.437	S	*470522	47
2.000	2.004	.437	S	*480522	48
2.004	2.004	.437	S	*450522	45
2.047	2.051	.312	S	472642	47
2.047	2.051	.312	V	472642V	47
2.047	2.052	.330	N	4529N➡	68
2.062	2.066	.375	S	*450774	45
2.062	**2.066**	**.375**	**S**	**470774**	**47**
2.062	2.066	.375	N	*470774N	47
2.062	2.066	.375	V	470774V	47
2.062	2.066	.375	S	*480774	48
2.062	2.066	.437	S	*50403	5S
2.062	2.066	.437	S	*410403	41
2.062	2.066	.437	S	*450403	45
2.062	2.066	.437	S	470403	47
2.062	2.066	.437	S	*480403	48
2.062	2.066	.437	H	*480403H	48
2.062	2.066	.437	N	*480403N	48
2.062	2.066	.437	V	*480403V	48
2.062	2.072	.250	S	6760S	35
2.082	2.087	.312	S	*473304	47
2.106	**2.110**	**.312**	**S**	**472287**	**47**
2.106	2.110	.468	S	*410153	41
2.106	2.110	.468	S	*450153	45
2.106	2.110	.468	N	*450153N	45
2.125	2.129	.312	V	471192V	47
2.125	**2.129**	**.312**	**S**	**471192**	**47**
2.125	2.129	.312	N	*471192N	47
2.125	2.129	.312	S	*481192	48
2.125	2.129	.312	H	*481192H	48
2.125	2.129	.375	T	39140⬅	94
2.125	2.129	.375	S	*482576	48

1.375" (1-3/8") SHAFT (cont.)

Hsg. Bore	Seal O.D.	Seal Width	Lip Mat'l	Part No.	Type/ Illus.
2.125	2.129	.375	N	482576N	48
2.125	2.129	.437	S	*410135	41
2.125	2.129	.437	N	*410135N	41
2.125	2.129	.437	S	*450135	45
2.125	2.129	.437	S	470135	47
2.125	2.129	.437	N	*470135N	47
2.125	2.129	.437	S	*480135	48
2.125	2.129	.812	S	*70135S	7S
2.125	2.130	.375	S	*453022	45
2.125	2.130	.375	S	*483022	48
2.166	2.176	.485	N	*324152	32
2.244	2.254	1.197	N	2655⬅	79
2.248	2.252	.375	S	*471136	47
2.248	2.252	.375	S	*481136	48
2.250	2.252	1.062	L	6200	9L
2.250	2.254	.250	S	40169S	4S
2.250	2.254	.312	V	473214V	47
2.250	**2.254**	**.312**	**S**	**473214**	**47**
2.250	2.254	.312	A	473214A	47
2.250	2.254	.312	S	*483214	48
2.250	2.254	.325	S	*482167	48
2.250	2.254	.375	S	*411000	41
2.250	2.254	.375	S	*481000	48
2.250	2.254	.500	S	*410169	41
2.250	2.254	.500	N	*410169N	41
2.250	2.254	.500	S	*450169	45
2.250	2.254	.500	N	*450169N	45
2.250	2.254	.500	V	*450169V	45
2.250	2.254	.500	S	470169	47
2.250	2.254	.500	S	*480169	48
2.250	2.254	.713	S	7495S	61
2.282	2.286	.250	S	42763	4S
2.282	2.286	.500	L	50402	5L
2.327	2.332	.406	S	204027	204
2.328	2.332	.406	F	*205027	205
2.373	2.378	.500	N	*4419	#
2.374	2.378	.250	S	43089S	4S
2.374	**2.378**	**.312**	**S**	**473215**	**47**
2.374	2.378	.312	S	*483215	48
2.374	2.378	.312	V	*483215V	48
2.374	2.378	.375	S	*451131	45
2.374	2.378	.375	S	*471131	47
2.374	2.378	.375	N	*471131N	47
2.374	2.378	.375	S	*481131	48
2.374	2.378	.437	S	*411302	41
2.374	2.378	.500	N	3116⬅	71
2.374	2.378	.500	N	3116N⬅	71
2.374	2.378	.500	S	*410055	41
2.374	2.378	.500	S	*450055	45
2.374	2.378	.500	N	*450055N	45
2.374	2.378	.500	V	*450055V	45
2.374	2.378	.500	S	*470055	47
2.374	2.378	.500	N	470055N	47
2.374	2.378	.500	S	480055	48
2.374	2.378	.750	S	*412691	41
2.437	2.441	.250	S	6241S	48
2.437	2.441	.250	S	*7769	48
2.437	2.441	.250	S	*40061S	4S
2.437	2.441	.375	S	470950	47
2.437	2.441	.375	S	*480950	48
2.437	2.441	.375	N	*480950N	48
2.437	2.441	.468	S	*410061	41
2.437	2.441	.468	S	*450061	45
2.437	2.441	.468	S	*470061	47
2.437	2.441	.468	S	*480061	48
2.437	2.441	.468	N	*480061N	48
2.441	**2.445**	**.375**	**S**	**471276**	**47**
2.441	2.445	.375	N	*471276N	47
2.441	2.445	.375	V	471276V	47
2.441	2.445	.375	S	*481276	48
2.502	2.506	.250	L	7245	4L
2.502	**2.506**	**.375**	**S**	**471835**	**47**

For Illustration and Material Data See Technical Section

Designed For A Specific Application - Not Recommended For General Use ➡ Hydrodynamic Lip Design-CW ⬅ Hydrodynamic Lip Design-CCW

* The U.S. customer service number is 877-4-TIMKEN. The Canadian customer service numbers are 800-565-4927 (English) and 800-565-0438 (French-Canadian).

Hsg. Bore	Seal O.D.	Seal Width	Lip Mat'l	Part No.	Type/ Illus.
1.375" (1-3/8") SHAFT (cont.)					
2.502	2.506	.375	S	*481835	48
2.502	2.506	.500	S	*410444	41
2.502	2.506	.500	H	*410444H	41
2.502	2.506	.500	S	450444	45
2.502	2.506	.500	S	*470444	47
2.502	2.506	.500	S	*480444	48
2.561	**2.565**	**.375**	**S**	**473258**	**47**
2.561	2.565	.500	S	*411847	41
2.561	2.565	.500	S	*471847	47
2.561	2.565	.500	N	471847N	47
2.561	2.565	.500	S	*481847	48
2.623	2.627	.250	S	*40504S	4S
2.623	**2.627**	**.375**	**S**	**472843**	**47**
2.623	2.627	.500	S	*410504	41
2.623	2.627	.500	S	*450504	45
2.623	2.627	.500	S	*470504	47
2.623	2.627	.500	S	*480504	48
2.686	2.690	.500	S	*50776	5S
2.686	2.690	.500	S	*410776	41
2.686	**2.690**	**.500**	**S**	**450776**	**45**
2.686	2.690	.500	S	*470776	47
2.686	2.690	.500	S	*480776	48
2.716	2.720	.468	S	*410456	41
2.716	**2.720**	**.468**	**S**	**450456**	**45**
2.717	2.723	.375	S	323125	32
2.750	2.754	.500	S	*410463	41
2.750	2.754	.500	S	450463	45
2.750	2.754	.500	S	*470463	47
2.750	2.754	.500	S	*480463	48
2.835	**2.839**	**.312**	**S**	**473197**	**47**
2.835	2.839	.312	V	*473197V	47
2.835	2.839	.312	N	*483197N	48
2.835	2.839	.375	S	472658	47
2.835	2.839	.375	V	*472658V	47
2.835	2.839	.468	S	*410452	41
2.835	2.839	.468	S	450452	45
2.835	2.839	.468	N	*450452N	45
2.835	2.839	.468	S	*470452	47
2.835	2.839	.468	S	*480452	48
2.835	2.839	.468	H	*480452H	48
2.835	2.839	.468	N	*480452N	48
2.835	3.020	.390	S	*7370	48
2.875	2.879	.468	S	*411105	41
2.875	2.879	.468	S	*451105	45
2.875	**2.879**	**.468**	**S**	**471105**	**47**
2.875	2.879	.468	S	*481105	48
3.000	3.005	.500	S	*410989	41
3.000	3.005	.500	S	470989	47
3.125	3.130	.500	S	450516	45
3.150	**3.154**	**.375**	**S**	**471379**	**47**
3.350	**3.355**	**.468**	**S**	**450492**	**45**
3.500	3.505	.500	S	*455292	45
3.542	3.549	.397	N	4532N⬅	93
3.543	3.548	.500	S	*413638	41
1.377" SHAFT					
–	–	–	S	800350	VRS1
–	–	–	V	800354	VRS1
–	–	–	V	800355	VRS2
–	**–**	**.313**		**99133**	**Redi-Sleeve**
–	**–**	**.500**		**99138**	**Redi-Sleeve**
–	**–**	**.512**		**99139**	**Redi-Sleeve**
2.162	2.167	.744	N	4614N⬅➡	87
2.874	2.881	.693	N	4613N⬅➡	57
35,00mm (1.378") SHAFT					
–	–	–	S	800350	VRS1
–	–	–	V	800354	VRS1
–	–	–	V	800355	VRS2

Hsg. Bore	Seal O.D.	Seal Width	Lip Mat'l	Part No.	Type/ Illus.
35,00mm (1.378") SHAFT (cont.)					
–	**–**	**.512**		**99139**	**Redi-Sleeve**
41,80	*42,00*	*6,00*	*S*	*35X42X6★	32
1.646	1.654	.236			
41,80	*42,00*	*8,00*	*S*	*35X42X8★	32
1.646	1.654	.315			
43,80	*44,00*	*7,00*	*S*	*35X44X7★	32
1.724	1.732	.276			
44,00	*44,10*	*7,00*	*S*	710383★	47
1.732	1.736	.276			
44,80	*45,00*	*6,00*	*S*	*35X45X6★	32
1.764	1.772	.236			
44,80	*45,00*	*8,00*	*S*	*35X45X8★	32
1.764	1.772	.315			
44,80	*45,00*	*10,00*	*S*	*35X45X10★	32
1.764	1.772	.394			
44,80	*45,00*	*12,00*	*S*	*35X45X12★	32
1.764	1.772	.472			
45,00	*45,15*	*7,00*	*S*	35X45X7★	35
1.772	1.778	.276			
45,80	*46,00*	*10,00*	*S*	*35X46X10★	32
1.803	1.811	.394			
46,30	*46,50*	*8,00*	*S*	*35X46.5X8★	32
1.823	1.831	.315			
46,80	*47,00*	*7,50*	*S*	*35X47X7.5★	32
1.842	1.850	.295			
46,80	*47,00*	*8,00*	*S*	*35X47X8★	32
1.842	1.850	.315			
46,80	*47,00*	*10,00*	*S*	*35X47X10★	32
1.842	1.850	.394			
47,00	*47,20*	*7,00*	*V*	*35X47X7V★	32
1.850	1.858	.276			
47,00	*47,23*	*7,00*	*S*	223510★	35
1.850	1.859	.276			
47,00	*47,23*	*7,00*	*S*	35X47X7★	35
1.850	1.859	.276			
47,00	*47,40*	*7,00*	*H*	1172★➡	32
1.850	1.866	.276			
47,80	*48,00*	*7,00*	*S*	*35X48X7★	32
1.882	1.890	.276			
47,80	*48,00*	*9,00*	*S*	*35X48X9★	32
1.882	1.890	.354			
47,80	*48,00*	*10,00*	*S*	*35X48X10★	32
1.882	1.890	.394			
48,00	*48,21*	*7,60*	*V*	320249★➡	32
1.890	1.898	.299			
48,00	*48,20*	*8,00*	*S*	35X48X8★	32
1.890	1.898	.315			
48,00	*48,20*	*8,00*	*S*	714436★	32
1.890	1.898	.315			
48,00	*48,25*	*14,00*	*N*	1215★	#
1.890	1.900	.551			
48,00	*48,25*	*14,00*	*N*	1215N★	#
1.890	1.900	.551			
48,00	*48,28*	*15,00*	*S*	710051★&	86
1.890	1.901	.591			
48,00	*48,40*	*7,00*	*V*	1108★➡	32
1.890	1.906	.276			
48,80	*49,00*	*6,00*	*S*	*35X49X6★	32
1.921	1.929	.236			
48,80	*49,00*	*8,00*	*S*	*35X49X8★	32
1.921	1.929	.315			
49,00	*49,30*	*8,00*	*S*	710178★	#
1.929	1.941	.315			
49,21	*49,63*	*6,00*	*N*	1987★	33
1.937	1.954	.236			
49,30	*49,50*	*10,00*	*S*	*35X49.5X10★	32
1.941	1.949	.394			
49,60	*49,83*	*11,00*	*N*	1940★➡	32
1.953	1.962	.433			
49,80	*50,00*	*9,00*	*S*	*35X50X9★	32
1.961	1.969	.354			

For Illustration and Material Data See Technical Section

Designed For A Specific Application - Not Recommended For General Use ➡ Hydrodynamic Lip Design-CW ⬅ Hydrodynamic Lip Design-CCW

⬅➡ Hydrodynamic Lip Design-Bidirectional & Flanged O.D.

* The U.S. customer service number is 877-4-TIMKEN. The Canadian customer service numbers are 800-565-4927 (English) and 800-565-0438 (French-Canadian). ★ Metric Seal

35,00mm (1.378") SHAFT (cont.)

Hsg. Bore	Seal O.D.	Seal Width	Lip Mat'l	Part No.	Type/ Illus.
49,80	50,00	10,00	S	*35X50X10★	32
1.961	1.969	.394			
49,80	50,00	11,00	S	*35X50X11★	32
1.961	1.969	.433			
50,00	50,20	7,00	S	35X50X7★	32
1.969	1.976	.276			
50,00	50,20	8,00	V	*35X50X8V★	32
1.969	1.976	.315			
50,00	50,20	8,00	H	710329★⬅	32
1.969	1.976	.315			
50,00	50,20	11,00	S	710324★⬅	32
1.969	1.976	.433			
50,00	50,24	8,00	S	35X50X8★	35
1.969	1.978	.315			
50,00	50,24	8,00	S	223520★	35
1.969	1.978	.315			
50,00	50,25	10,00	H	*1980★➡	32
1.969	1.978	.394			
50,00	50,24	12,00	N	*1169★	32
1.969	1.978	.472			
50,00	50,28	11,50	N	710111★⬅	#
1.969	1.980	.453			
50,00	50,34	7,00	H	3771★➡	35
1.969	1.982	.276			
50,00	50,34	7,00	V	713771★➡	35
1.969	1.982	.276			
50,75	51,00	7,00	S	*35X51X7★	32
1.998	2.008	.276			
50,75	51,00	8,00	S	*35X51X8★	32
1.998	2.008	.315			
50,75	51,00	10,00	S	*35X51X10★	32
1.998	2.008	.394			
51,75	52,00	9,00	S	*35X52X9★	32
2.037	2.047	.354			
51,75	52,00	10,00	S	*35X52X10★	32
2.037	2.047	.394			
51,75	52,00	11,00	S	*35X52X11★	32
2.037	2.047	.433			
51,75	52,00	12,00	S	*35X52X12★	32
2.037	2.047	.472			
52,00	52,10	7,90	S	*484063★	48
2.047	2.051	.311			
52,00	52,13	8,00	S	35X52X8★	33
2.047	2.052	.315			
52,00	52,13	8,00	S	223535★	33
2.047	2.052	.315			
52,00	52,13	8,00	N	*4052★➡	47
2.047	2.052	.315			
52,00	52,13	8,50	S	*1077★	33
2.047	2.052	.335			
52,00	52,20	7,00	S	35X52X7★	32
2.047	2.055	.276			
52,00	52,25	10,00	S	1170★	32
2.047	2.057	.394			
52,00	52,35	7,75	N	3655★➡	32
2.047	2.061	.305			
52,00	52,35	7,75	N	713655★⬅	32
2.047	2.061	.305			
53,26	53,67	7,75	N	4040N★⬅	32
2.097	2.113	.305			
53,75	54,00	10,00	S	*35X54X10★	32
2.116	2.126	.394			
54,00	54,10	8,00	S	710217★	#
2.126	2.130	.315			
54,00	54,10	9,00	N	710199★⬅➡	#
2.126	2.130	.354			
54,00	54,20	8,00	S	35X54X8★	35
2.126	2.134	.315			
54,00	54,20	8,00	V	710331★⬅	32
2.126	2.134	.315			
54,00	54,20	10,00	V	*35X54X10V★	35
2.126	2.134	.394			

35,00mm (1.378") SHAFT (cont.)

Hsg. Bore	Seal O.D.	Seal Width	Lip Mat'l	Part No.	Type/ Illus.
54,00	54,30	8,00	V	1119★➡	32
2.126	2.138	.315			
54,75	55,00	7,00	S	*35X55X7★	32
2.155	2.165	.276			
54,75	55,00	9,00	S	*35X55X9★	32
2.155	2.165	.354			
54,75	55,00	10,00	S	*35X55X10★	32
2.155	2.165	.394			
54,75	55,00	12,00	S	*35X55X12★	32
2.155	2.165	.472			
54,89	55,04	14,66	H	3543★⬅➡	57
2.161	2.167	.577			
55,00	55,18	8,00	S	473823★	47
2.165	2.172	.315			
55,00	55,20	10,00	V	*35X55X10V★	32
2.165	2.173	.394			
55,00	55,10	8,00	S	35X55X8★	47
2.165	2.174	.315			
55,00	55,23	11,00	S	35X55X11★	32
2.165	2.174	.433			
55,00	55,23	11,00	N	223542★	32
2.165	2.174	.433			
55,00	55,30	11,00	S	*1171★	32
2.165	2.177	.433			
55,00	55,45	8,00	N	223540★⬅➡	40
2.165	2.183	.315			
55,75	56,00	5,80	S	*35X56X5.8★	32
2.195	2.205	.228			
55,75	56,00	12,00	S	*35X56X12★	32
2.195	2.205	.472			
56,00	56,10	16,00	V	710218★	#
2.205	2.209	.630			
56,00	56,20	8,00	S	35X56X8★	35
2.205	2.213	.315			
56,00	56,20	8,00	N	710314★⬅	40
2.205	2.213	.315			
56,00	56,20	8,00	S	710315★➡	40
2.205	2.213	.315			
56,00	56,20	9,00	S	710396★⬅➡	40
2.205	2.213	.354			
56,00	56,20	10,00	V	*35X56X10V★	35
2.205	2.213	.394			
56,00	56,27	10,00	S	35X56X10★	32
2.205	2.215	.394			
56,00	56,27	10,00	S	223543★	32
2.205	2.215	.394			
56,00	56,27	10,00	S	*320857★	32
2.205	2.215	.394			
56,00	56,30	9,00	S	2007★➡	#
2.205	2.217	.354			
56,00	56,30	9,00	S	2007N★➡	#
2.205	2.217	.354			
56,75	57,00	9,00	S	*35X57X9★	32
2.234	2.244	.354			
56,75	57,00	10,00	S	*35X57X10★	32
2.234	2.244	.394			
56,90	57,05	18,64	N	*4150N★⬅➡	#
2.240	2.246	.734			
56,90	57,05	19,41	N	710096★⬅➡	74
2.240	2.246	.764			
57,00	57,30	15,27	S	100165★	#
2.244	2.246	.601			
57,75	58,00	9,00	S	*35X58X9★	32
2.273	2.283	.354			
57,75	58,00	12,00	S	*35X58X12★	32
2.273	2.283	.472			
57,75	58,00	13,00	S	*35X58X13★	32
2.273	2.283	.512			
57,75	58,00	18,00	S	*35X58X18★	32
2.273	2.283	.709			
58,00	58,10	10,00	S	223550★	45
2.283	2.287	.394			

For Illustration and Material Data See Technical Section
Designed For A Specific Application - Not Recommended For General Use ➡ Hydrodynamic Lip Design-CW ⬅ Hydrodynamic Lip Design-CCW
⬅➡ Hydrodynamic Lip Design-Bidirectional
* The U.S. customer service number is 877-4-TIMKEN. The Canadian customer service numbers are 800-565-4927 (English) and 800-565-0438 (French-Canadian). ★ Metric Seal

35,00mm (1.378") SHAFT (cont.)

Hsg. Bore	Seal O.D.	Seal Width	Lip Mat'l	Part No.	Type/ Illus.
58,00	*58,14*	*11,90*	*S*	*1086★	33
2.283	2.289	.469			
58,00	*58,28*	*10,00*	*S*	35X58X10★	35
2.283	2.294	.394			
58,75	*59,00*	*12,00*	*S*	*35X59X12★	32
2.313	2.323	.472			
59,75	*60,00*	*8,00*	*S*	*35X60X8★	32
2.352	2.362	.315			
59,75	*60,00*	*11,00*	*S*	*35X60X11★	32
2.352	2.362	.433			
59,75	*60,00*	*12,00*	*S*	*35X60X12★	32
2.352	2.362	.472			
60,00	*60,23*	*10,00*	*S*	35X60X10★	35
2.362	2.371	.394			
60,00	*60,23*	*10,00*	*S*	223551★	35
2.362	2.371	.394			
60,00	*60,23*	*10,00*	*S*	710424★	35
2.362	2.371	.394			
60,00	*60,30*	*12,00*	*S*	710201★	47
2.362	2.374	.472			
61,75	*62,00*	*6,00*	*S*	*35X62X6★	32
2.431	2.441	.236			
61,75	*62,00*	*8,00*	*S*	*35X62X8★	32
2.431	2.441	.315			
61,75	*62,00*	*8,00*	*S*	*35X62X8★	32
2.431	2.441	.315			
61,75	*62,00*	*9,50*	*S*	*35X62X9.5★	32
2.431	2.441	.374			
61,75	*62,00*	*11,00*	*S*	*35X62X11★	32
2.431	2.441	.433			
61,75	*62,00*	*12,00*	*S*	*35X62X12★	32
2.431	2.441	.472			
62,00	*62,20*	*7,00*	*V*	*35X62X7V★	35
2.441	2.449	.276			
62,00	*62,20*	*10,00*	*S*	35X62X10★	35
2.441	2.449	.394			
62,00	*62,28*	*7,00*	*S*	35X62X7★	32
2.441	2.452	.276			
62,00	*62,28*	*8,00*	*N*	4901★⬅➡	40
2.441	2.452	.315			
62,00	*62,28*	*9,00*	*N*	223553★➡	40
2.441	2.452	.354			
62,00	*62,28*	*9,50*	*S*	223552★	32
2.441	2.452	.374			
63,00	*63,20*	*9,00*	*S*	710138★⬅➡	40
2.480	2.488	.354			
63,00	*63,28*	*10,00*	*S*	710419★	#
2.480	2.491	.394			
63,00	*63,28*	*10,00*	*S*	223554★	#
2.480	2.491	.394			
63,45	*63,55*	*7,92*	*S*	*6952S★	#
2.498	2.502	.312			
63,50	*63,83*	*11,05*	*S*	7687S★	#
2.500	2.513	.435			
63,75	*64,00*	*12,00*	*S*	*35X64X12★	32
2.510	2.520	.472			
63,75	*64,00*	*13,00*	*S*	*35X64X13★	32
2.510	2.520	.512			
64,00	*64,13*	*8,00*	*N*	35X64X8★	47
2.520	2.525	.315			
64,00	*64,13*	*8,00*	*N*	223555★	47
2.520	2.525	.315			
64,00	*64,14*	*9,50*	*N*	*474125N★	47
2.520	2.525	.374			
64,75	*65,00*	*12,00*	*S*	*35X65X12★	32
2.549	2.559	.472			
65,00	*65,20*	*8,00*	*S*	35X65X8★	32
2.559	2.567	.315			
65,00	*65,20*	*10,00*	*S*	35X65X10★	32
2.559	2.567	.394			
65,00	*65,20*	*12,00*	*S*	710335★	32
2.559	2.567	.472			

35,00mm (1.378") SHAFT (cont.)

Hsg. Bore	Seal O.D.	Seal Width	Lip Mat'l	Part No.	Type/ Illus.
67,00	*67,27*	*12,00*	*N*	1173★	32
2.638	2.648	.472			
67,75	*68,00*	*6,00*	*S*	*35X68X6★	32
2.667	2.677	.236			
68,00	*68,16*	*9,00*	*S*	223580★➡	40
2.677	2.683	.354			
68,00	*68,20*	*9,00*	*N*	710336★⬅	40
2.677	2.685	.354			
68,00	*68,20*	*10,00*	*V*	*35X68X10V★	35
2.677	2.685	.394			
68,00	*68,23*	*10,00*	*S*	*35X68X10★	35
2.677	2.686	.394			
68,00	*68,23*	*12,50*	*N*	*1140★	32
2.677	2.686	.492			
69,00	*69,20*	*8,00*	*S*	*35X69X8★	32
2.717	2.724	.315			
69,75	*70,00*	*10,00*	*S*	*35X70X10★	32
2.746	2.756	.394			
70,00	*70,20*	*8,00*	*S*	35X70X8★	32
2.756	2.764	.315			
71,75	*72,00*	*7,00*	*S*	*35X72X7★	32
2.825	2.835	.276			
71,75	*72,00*	*11,00*	*S*	*35X72X11★	32
2.825	2.835	.433			
71,75	*72,00*	*12,00*	*S*	*35X72X12★	32
2.825	2.835	.472			
72,00	*72,20*	*8,00*	*S*	35X72X8★	32
2.835	2.843	.315			
72,00	*72,20*	*10,00*	*V*	*35X72X10V★	35
2.835	2.843	.394			
72,00	*72,28*	*10,00*	*S*	35X72X10★	35
2.835	2.846	.394			
72,00	*72,28*	*10,00*	*S*	710360★	35
2.835	2.846	.394			
74,75	*75,00*	*8,00*	*S*	*35X75X8★	32
2.943	2.953	.315			
76,00	*76,28*	*9,00*	*N*	1147★➡	32
2.992	3.003	.354			
76,00	*76,30*	*12,50*	*N*	1136★⬅	30
2.992	3.004	.492			
78,00	*78,20*	*8,00*	*S*	*35X78X8★	32
3.071	3.079	.315			
79,72	*80,00*	*10,00*	*S*	*35X80X10★	32
3.139	3.150	.394			
79,72	*80,00*	*12,00*	*S*	*35X80X12★	32
3.139	3.150	.472			
79,72	*80,00*	*13,00*	*S*	*35X80X13★	32
3.139	3.150	.512			
80,00	*80,20*	*8,00*	*S*	35X80X8★	32
3.150	3.150	.315			
81,72	*82,00*	*7,00*	*S*	*35X82X7★	32
3.217	3.228	.276			

1.380" SHAFT

–	–	–	S	800350	VRS1
–	–	–	V	800354	VRS1
–	–	–	V	800355	VRS2
–	**–**	**.512**		**99139**	**Redi-Sleeve**
2.288	2.291	.750	V	710429	87

1.399" SHAFT

–	–	–	S	800350	VRS1
–	–	–	V	800354	VRS1
–	–	–	V	800355	VRS2
2.250	2.254	.250	S	470672	47
2.290	2.294	.500	S	710166	74
2.292	2.296	.460	S	*3237⬅➡	33
2.292	2.296	.460	S	8660S⬅➡	48
2.292	2.296	.500	L	8660L**	5L
2.482	2.750	.310	V	4795V⬅➡	74

For Illustration and Material Data See Technical Section
Designed For A Specific Application - Not Recommended For General Use ➡ Hydrodynamic Lip Design-CW ⬅ Hydrodynamic Lip Design-CCW
⬅➡ Hydrodynamic Lip Design-Bidirectional ** Canada Only
* The U.S. customer service number is 877-4-TIMKEN. The Canadian customer service numbers are 800-565-4927 (English) and 800-565-0438 (French-Canadian). ★ Metric Seal

Hsg. Bore	Seal O.D.	Seal Width	Lip Mat'l	Part No.	Type/ Illus.
1.399" SHAFT (cont.)					
2.484	2.489	.280	V	714558⬅➡	#
2.484	2.489	.500	V	714559⬅➡	74
1.400" SHAFT					
–	–	–	S	800350	VRS1
–	–	–	V	800354	VRS1
–	–	–	V	800355	VRS2
1.969	2.000	.250	F	1110	#
2.282	2.288	.547	V	4857⬅➡	86
2.478	2.486	.521	S	⁎710066&	83
1.406" (1-13/32") SHAFT					
–	–	–	S	800350	VRS1
–	–	–	V	800354	VRS1
–	–	–	V	800355	VRS2
2.125	2.129	.437	L	50126	5L
36,00mm (1.417") SHAFT					
–	–	–	S	800350	VRS1
–	–	–	V	800354	VRS1
–	–	–	V	800355	VRS2
–	**–**	**.518**		**99146**	**Redi-Sleeve**
43,80	*44,00*	*5,00*	*S*	⁎36X44X5★	32
1.724	1.732	.197			
44,00	*44,23*	*5,00*	*S*	710252★	32
1.732	1.741	.197			
45,80	*46,00*	*6,00*	*S*	⁎36X46X6★	32
1.803	1.811	.236			
45,80	*46,00*	*9,00*	*S*	⁎36X46X9★	32
1.803	1.811	.354			
46,00	*46,10*	*9,00*	*S*	710343★	33
1.811	1.815	.354			
46,80	*47,00*	*8,00*	*S*	⁎36X47X8★	32
1.842	1.850	.315			
47,00	*47,20*	*7,00*	*S*	36X47X7★	35
1.850	1.858	.276			
47,00	*47,20*	*7,00*	*S*	223601★	35
1.850	1.858	.276			
47,80	*48,00*	*7,00*	*S*	⁎36X48X7★	32
1.882	1.890	.276			
47,80	*48,00*	*10,00*	*S*	⁎36X48X10★	32
1.882	1.890	.394			
48,80	*49,00*	*7,00*	*S*	⁎36X49X7★	32
1.921	1.929	.276			
49,00	*49,28*	*7,00*	*N*	223602★➡	32
1.929	1.940	.276			
49,61	*49,81*	*7,01*	*N*	321417N★	32
1.953	1.961	.276			
49,80	*50,00*	*10,00*	*S*	⁎36X50X10★	32
1.961	1.969	.394			
50,00	*50,08*	*7,00*	*S*	36X50X7★	47
1.969	1.972	.276			
50,00	*50,08*	*7,00*	*S*	223605★	47
1.969	1.972	.276			
50,00	*50,08*	*7,00*	*S*	⁎474097★	47
1.969	1.972	.276			
50,00	*50,20*	*8,00*	*S*	710341★⬅	32
1.969	1.976	.315			
50,75	*51,00*	*7,00*	*S*	⁎36X51X7★	32
1.998	2.008	.276			
51,75	*52,00*	*8,00*	*S*	⁎36X52X8★	32
2.037	2.047	.315			
51,75	*52,00*	*10,00*	*S*	⁎36X52X10★	32
2.037	2.047	.394			
52,00	*52,20*	*7,00*	*S*	36X52X7★	35
2.047	2.055	.276			
52,00	*52,20*	*7,00*	*V*	⁎36X52X7V★	32
2.047	2.055	.276			
36,00mm (1.417") SHAFT (cont.)					
52,00	*52,20*	*10,00*	*S*	223608★⬅	32
2.047	2.055	.394			
53,75	*54,00*	*7,00*	*S*	⁎36X54X7★	32
2.116	2.126	.276			
53,75	*54,00*	*10,00*	*S*	⁎36X54X10★	32
2.116	2.126	.394			
54,00	*54,20*	*7,50*	*V*	⁎36X54X8V★	35
2.126	2.134	.295			
54,00	*54,20*	*7,50*	*S*	36X54X7.5★	35
2.126	2.134	.295			
54,00	*54,20*	*8,00*	*S*	36X54X8★	35
2.126	2.134	.315			
54,00	*54,28*	*7,00*	*N*	710197★	40
2.126	2.137	.276			
54,00	*54,28*	*7,50*	*S*	223610★	35
2.126	2.137	.295			
54,75	*55,00*	*10,00*	*S*	⁎36X55X10★	32
2.155	2.165	.394			
54,75	*55,00*	*12,00*	*S*	⁎36X55X12★	32
2.155	2.165	.472			
55,00	*55,09*	*6,50*	*S*	2003★	47
2.165	2.169	.256			
55,00	*55,09*	*6,50*	*S*	2003N★	47
2.165	2.169	.256			
55,00	*55,09*	*6,50*	*S*	⁎474113★	47
2.165	2.169	.256			
55,00	*55,12*	*9,50*	*S*	⁎474121★	47
2.165	2.170	.374			
55,75	*56,00*	*12,00*	*S*	⁎36X56X12★	32
2.195	2.205	.472			
56,00	*56,25*	*10,00*	*S*	36X56X10★	35
2.205	2.215	.394			
2.250	2.254	.250	S	474127	47
58,00	*58,25*	*8,00*	*S*	36X58X8★	47
2.283	2.293	.315			
58,00	*58,23*	*12,00*	*S*	36X58X12★	35
2.283	2.293	.472			
58,00	*58,30*	*8,00*	*S*	474288★	47
2.283	2.295	.315			
59,75	*60,00*	*6,00*	*S*	⁎36X60X6★	32
2.352	2.362	.236			
60,00	*60,20*	*7,00*	*S*	36X60X7★	32
2.362	2.370	.276			
60,00	*60,20*	*8,00*	*V*	1965★	48
2.362	2.370	.315			
61,75	*62,00*	*10,00*	*S*	⁎36X62X10★	32
2.431	2.441	.394			
62,00	*62,28*	*7,00*	*S*	36X62X7★	32
2.441	2.452	.276			
63,25	*63,50*	*13,00*	*S*	⁎36X63.5X13★	32
2.490	2.500	.512			
64,00	*64,20*	*11,00*	*S*	710152★	#
2.520	2.528	.433			
65,00	*65,20*	*8,00*	*S*	710057★	48
2.559	2.567	.315			
2.614	2.629	.500	S	⁎9342S	48
68,00	*68,18*	*8,00*	*S*	223620★➡	48
2.677	2.684	.315			
68,00	*68,28*	*10,00*	*S*	36X68X10★	35
2.677	2.688	.394			
70,00	*70,20*	*8,00*	*S*	⁎36X70X8★	32
2.756	2.764	.315			
72,00	*72,20*	*8,00*	*S*	⁎36X72X8★	32
2.835	2.843	.315			
1.437" (1-7/16") SHAFT					
–	–	–	S	800381	VRS2
–	–	–	V	800385	VRS2
–	**–**	**.375**		**99144**	**Redi-Sleeve**
–	**–**	**.563**		**99143**	**Redi-Sleeve**

For Illustration and Material Data See Technical Section

Designed For A Specific Application - Not Recommended For General Use ➡ Hydrodynamic Lip Design-CW ⬅ Hydrodynamic Lip Design-CCW

⬅➡ Hydrodynamic Lip Design-Bidirectional & Flanged O.D.

⁎ The U.S. customer service number is 877-4-TIMKEN. The Canadian customer service numbers are 800-565-4927 (English) and 800-565-0438 (French-Canadian). ★ Metric Seal

Hsg. Bore	Seal O.D.	Seal Width	Lip Mat'l	Part No.	Type/ Illus.
1.437" (1-7/16") SHAFT (cont.)					
2.000	2.004	.437	S	*410930	41
2.000	2.004	.437	N	*410930N	41
2.000	2.004	.437	S	*450930	45
2.000	2.006	.125	S	340930	34
2.059	2.065	.315	T	*712141➡	32
2.061	**2.066**	**.312**	**S**	**3395**	**47**
2.061	2.066	.312	S	*474090	47
2.062	2.066	.375	S	*482422	48
2.062	2.068	.250	S	352444	35
2.125	**2.129**	**.312**	**S**	**473224**	**47**
2.125	2.129	.437	S	*410453	41
2.125	2.129	.437	N	*410453N	41
2.125	2.129	.437	V	*410453V	41
2.125	2.129	.437	S	*450453	45
2.125	2.129	.437	N	*450453N	45
2.125	2.129	.437	S	*470453	47
2.125	2.129	.437	N	*470453N	47
2.125	2.129	.437	S	*480453	48
2.125	2.129	.437	N	*480453N	48
2.188	2.192	.480	S	*9249	47
2.250	**2.254**	**.312**	**S**	**473016**	**47**
2.250	2.254	.312	N	*473016N	47
2.250	2.254	.500	S	*410171	41
2.250	2.254	.500	S	*470171	47
2.250	2.254	.500	H	*470171H	47
2.250	2.254	.500	N	*470171N	47
2.250	2.254	.500	S	*480171	48
2.312	**2.316**	**.375**	**S**	**472655**	**47**
2.374	**2.378**	**.312**	**S**	**473225**	**47**
2.374	2.378	.375	S	*471809	47
2.374	2.378	.375	S	*481809	48
2.374	2.378	.500	S	*410057	41
2.374	2.378	.500	S	*450057	45
2.374	2.378	.500	V	*450057V	45
2.374	2.378	.500	S	*470057	47
2.374	2.378	.500	S	*480057	48
36,50mm (1.437") SHAFT					
61,75	*62,00*	*7,00*	*S*	*36.5X62X7★	32
2.431	2.441	.276			
1.437" (1-7/16") SHAFT					
2.437	2.441	.250	S	*6966S	44
2.437	**2.441**	**.312**	**S**	**474264**	**47**
2.437	2.441	.468	S	*410062	41
2.437	2.441	.468	S	*450062	45
2.437	2.441	.468	S	470062	47
2.437	2.441	.468	S	*480062	48
2.441	2.445	.374	S	4989	#
2.441	2.445	.375	S	481826	48
2.500	2.508	.687	S	*8673	25
2.502	**2.506**	**.312**	**S**	**473226**	**47**
2.502	2.506	.500	S	*410144	41
2.502	2.506	.500	S	*450144	45
2.502	2.506	.500	S	*470144	47
2.502	2.506	.500	S	*480144	48
2.502	2.506	.500	V	*480144V	48
2.623	2.627	.375	S	473437	47
2.623	2.627	.500	S	*410122	41
2.623	2.627	.500	H	*410122H	41
2.623	2.627	.500	S	*450122	45
2.623	2.627	.500	S	*470122	47
2.623	2.627	.500	S	*480122	48
2.686	2.690	.250	S	*43088S	4S
2.686	**2.690**	**.375**	**S**	**471862**	**47**
2.686	2.690	.500	S	*410746	41
2.686	2.690	.500	S	*450746	45
2.686	2.690	.500	S	*470746	47
2.686	2.690	.500	S	*480746	48
2.750	2.754	.500	S	*410808	41
1.437" (1-7/16") SHAFT (cont.)					
2.750	2.754	.500	S	*450808	45
2.750	2.754	.500	S	470808	47
2.750	2.754	.500	S	*480808	48
3.000	**3.005**	**.500**	**S**	**471405**	**47**
1.440" SHAFT					
–	–	–	S	800381	VRS2
–	–	–	V	800385	VRS2
–	**–**	**.375**		**99144**	**Redi-Sleeve**
2.061	2.075	.315	H	3394➡	32
2.756	2.764	.551	N	*712134	35
37,00mm (1.457") SHAFT					
–	–	–	S	800381	VRS2
–	–	–	V	800385	VRS2
–	**–**	**.375**		**99145**	**Redi-Sleeve**
0,00	*55,52*	*8,01*	*S*	710524★	47
.000	2.186	.315			
46,80	*47,00*	*10,00*	*S*	*37X47X10★	32
1.842	1.850	.394			
50,00	*50,25*	*6,00*	*N*	223750★➡	32
1.969	1.978	.236			
50,50	*50,70*	*7,00*	*N*	710355★➡	32
1.988	1.996	.276			
52,00	*52,15*	*6,00*	*S*	710149★	#
2.047	2.053	.236			
52,00	*52,28*	*8,00*	*S*	37X52X8★	35
2.047	2.058	.315			
52,75	*53,00*	*7,00*	*S*	*37X53X7★	32
2.077	2.087	.276			
54,75	*55,00*	*8,00*	*S*	*37X55X8★	32
2.155	2.165	.315			
56,00	*56,20*	*12,50*	*V*	710259★⬅➡	32
2.205	2.213	.492			
56,75	*57,00*	*10,00*	*S*	*37X57X10★	32
2.234	2.244	.394			
57,75	*58,00*	*7,00*	*S*	*37X58X7★	32
2.273	2.283	.276			
57,75	*58,00*	*10,00*	*S*	*37X58X10★	32
2.273	2.283	.394			
57,75	*58,00*	*13,00*	*S*	*37X58X13★	32
2.273	2.283	.512			
58,00	*58,10*	*10,00*	*S*	710353★➡	66
2.283	2.287	.394			
62,00	*62,23*	*10,00*	*S*	710228★	40
2.441	2.450	.394			
63,75	*64,00*	*13,00*	*S*	*37X64X13★	32
2.510	2.520	.512			
78,00	*78,30*	*12,00*	*S*	239134★	#
3.071	3.083	.472			
1.460" SHAFT					
–	–	–	S	800381	VRS2
–	–	–	V	800385	VRS2
–	**–**	**.375**		**99145**	**Redi-Sleeve**
2.077	2.034	.070	S	*8733	#
1.465" SHAFT					
–	–	–	S	800381	VRS2
–	–	–	V	800385	VRS2
2.372	2.374	.433	S	710426	#
2.372	2.374	1.508	N	710441&	#
1.468" (1-15/32") SHAFT					
–	–	–	S	800381	VRS2
–	–	–	V	800385	VRS2

For Illustration and Material Data See Technical Section

Designed For A Specific Application - Not Recommended For General Use ➡ Hydrodynamic Lip Design-CW ⬅➡ Hydrodynamic Lip Design-Bidirectional & Flanged O.D.

* The U.S. customer service number is 877-4-TIMKEN. The Canadian customer service numbers are 800-565-4927 (English) and 800-565-0438 (French-Canadian). ★ Metric Seal

Hsg. Bore	Seal O.D.	Seal Width	Lip Mat'l	Part No.	Type/ Illus.
1.468" (1-15/32") SHAFT (cont.)					
2.374	2.378	.500	S	*450058	45
2.374	2.378	.500	S	*480058	48
2.374	2.378	.500	N	*480058N	48
2.375	**2.379**	**.375**	**S**	**473438**	**47**
2.437	**2.441**	**.375**	**S**	**473439**	**47**
2.437	2.441	.468	S	*450255	45
1.473" SHAFT					
–	–	–	S	800381	VRS2
–	–	–	V	800385	VRS2
1.971	1.979	.562	S	7235S	32
1.476" SHAFT					
1.493	2.447	.620	S	*8097%	39
1.479" SHAFT					
–	–	–	S	800381	VRS2
–	–	–	V	800385	VRS2
2.563	2.567	.470	S	710304	#
1.484" SHAFT					
–	–	–	S	800381	VRS2
–	–	–	V	800385	VRS2
2.254	2.258	.250	L	40468	4L
2.254	2.258	.312	L	50468	5L
1.491" SHAFT					
–	–	–	S	800381	VRS2
–	–	–	V	800385	VRS2
–	**–**	**.512**		**99147**	**Redi-Sleeve**
2.191	2.195	.250	S	8597S	48
1.494" SHAFT					
–	–	–	S	800381	VRS2
–	–	–	V	800385	VRS2
–	**–**	**.512**		**99147**	**Redi-Sleeve**
1.875	1.879	.187	S	*483643	48
38,00mm (1.496") SHAFT					
–	–	–	S	800381	VRS2
–	–	–	V	800385	VRS2
–	**–**	**.512**		**99147**	**Redi-Sleeve**
0,00	*59,99*	*11,00*	*S*	710509★	#
.000	2.362	.433			
46,80	*47,00*	*7,00*	*S*	*38X47X7★	32
1.842	1.850	.276			
47,00	*47,10*	*7,00*	*S*	223805★	25
1.850	1.854	.276			
47,00	*47,25*	*8,00*	*S*	*38X47X8★	25
1.850	1.860	.315			
47,80	*48,00*	*6,00*	*S*	*38X48X6★	32
1.882	1.890	.236			
47,80	*48,00*	*7,00*	*S*	*38X48X7★	32
1.882	1.890	.276			
47,80	*48,00*	*10,00*	*S*	*38X48X10★	32
1.882	1.890	.394			
49,80	*50,00*	*8,00*	*S*	*38X50X8★	32
1.961	1.969	.315			
49,80	*50,00*	*10,00*	*S*	*38X50X10★	32
1.961	1.969	.394			
50,00	*50,20*	*7,00*	*V*	*38X50X7V★	35
1.969	1.976	.276			
50,00	*50,25*	*6,00*	*N*	223802★➡	32
1.969	1.978	.236			
38,00mm (1.496") SHAFT (cont.)					
50,00	*50,25*	*7,00*	*S*	38X50X7★	35
1.969	1.978	.276			
50,00	*50,28*	*8,00*	*S*	223801★	32
1.969	1.980	.315			
50,00	*50,28*	*10,50*	*N*	223800★➡	32
1.969	1.980	.413			
50,75	*51,00*	*7,00*	*S*	*38X51X7★	32
1.998	2.008	.276			
51,75	*52,00*	*6,00*	*S*	*38X52X6★	32
2.037	2.047	.236			
51,75	*52,00*	*8,00*	*S*	*38X52X8★	32
2.037	2.047	.315			
51,75	*52,00*	*9,00*	*S*	*38X52X9★	32
2.037	2.047	.354			
51,75	*52,00*	*10,00*	*S*	*38X52X10★	32
2.037	2.047	.394			
52,00	*52,20*	*6,00*	*S*	710309★	#
2.047	2.055	.236			
52,00	***52,20***	***7,00***	***S***	**38X52X7★**	**32**
2.047	**2.055**	**.276**			
52,00	*52,20*	*7,00*	*V*	*38X52X7V★	35
2.047	2.055	.276			
52,00	*52,20*	*9,00*	*S*	239128★	#
2.047	2.055	.354			
52,00	*52,25*	*6,00*	*S*	1196★	47
2.047	2.057	.236			
52,00	*52,25*	*8,50*	*S*	38X52X8.5★	32
2.047	2.057	.335			
52,00	*52,25*	*8,50*	*S*	38X52X8.5★	32
2.047	2.057	.335			
52,00	*52,25*	*8,50*	*S*	1174★	32
2.047	2.057	.335			
52,00	*52,25*	*8,50*	*S*	*320833★	32
2.047	2.057	.335			
52,00	*52,30*	*8,00*	*H*	1966★➡	35
2.047	2.059	.315			
52,04	*52,15*	*6,35*	*S*	3357★&	283
2.049	2.053	.250			
52,27	*52,40*	*6,35*	*S*	482415★	48
2.058	2.063	.250			
52,35	*52,60*	*6,00*	*S*	*38X52.6X6★	32
2.061	2.071	.236			
52,91	*53,01*	*8,26*	*S*	*293751★	29
2.083	2.087	.325			
53,00	*0,00*	*8,00*	*S*	223822★	32
2.087	.000	.315			
53,00	*53,20*	*8,00*	*S*	38X53X8★	32
2.087	2.094	.315			
53,00	*53,30*	*8,00*	*V*	1120★⬅	32
2.087	2.098	.315			
54,00	*54,10*	*25,00*	*T*	39875★➡	#
2.126	2.130	.984			
54,00	*54,18*	*7,00*	*S*	38X54X7★	48
2.126	2.133	.276			
54,00	*54,18*	*10,00*	*S*	38X54X10★	32
2.126	2.133	.394			
54,00	*54,20*	*10,00*	*V*	*38X54X10V★	35
2.126	2.134	.394			
54,00	*54,30*	*7,00*	*S*	239146★	48
2.126	2.138	.276			
54,75	*55,00*	*6,00*	*S*	*38X55X6★	32
2.155	2.165	.236			
54,75	*55,00*	*8,00*	*S*	*38X55X8★	32
2.155	2.165	.315			
54,75	*55,00*	*9,00*	*S*	*38X55X9★	32
2.155	2.165	.354			
54,75	*55,00*	*10,00*	*S*	*38X55X10★	32
2.155	2.165	.394			
55,00	*55,23*	*7,00*	*N*	38X55X7★	32
2.165	2.174	.276			
55,00	*55,28*	*7,00*	*N*	223830★	35
2.165	2.176	.276			

For Illustration and Material Data See Technical Section
Designed For A Specific Application - Not Recommended For General Use ➡ Hydrodynamic Lip Design-CW ⬅ Hydrodynamic Lip Design-CCW % External Bore
& Flanged O.D. * The U.S. customer service number is 877-4-TIMKEN. The Canadian customer service numbers are 800-565-4927 (English) and 800-565-0438 (French-Canadian).
★ Metric Seal

38,00mm (1.496") SHAFT (cont.)

Hsg. Bore	Seal O.D.	Seal Width	Lip Mat'l	Part No.	Type/ Illus.
55,00	55,30	9,00	N	223831★➡	32
2.165	2.177	.354			
55,75	56,00	7,00	S	*38X56X7★	32
2.195	2.205	.276			
55,75	56,00	12,00	S	*38X56X12★	32
2.195	2.205	.472			
56,00	56,20	10,00	V	*38X56X10V★	35
2.205	2.213	.394			
56,00	56,28	10,00	S	38X56X10★	32
2.205	2.216	.394			
56,75	57,00	10,00	S	*38X57X10★	32
2.234	2.244	.394			
57,75	58,00	7,00	S	*38X58X7★	32
2.273	2.283	.276			
57,75	58,00	10,00	S	*38X58X10★	32
2.273	2.283	.394			
57,75	58,00	11,00	S	*38X58X11★	32
2.273	2.283	.433			
58,00	58,10	11,00	S	710319★	47
2.283	2.287	.433			
58,00	58,11	8,00	S	38X58X8★	47
2.283	2.288	.315			
58,00	58,11	8,00	S	223840★	47
2.283	2.288	.315			
58,00	58,11	8,00	V	223842★	48
2.283	2.288	.315			
58,00	58,11	8,00	S	*474119★	47
2.283	2.288	.315			
58,00	58,20	10,00	N	710139★	#
2.283	2.291	.394			
58,00	58,25	11,00	S	1175★➡	32
2.283	2.293	.433			
59,00	59,30	9,00	N	1038★➡	32
2.323	2.335	.354			
59,75	60,00	9,00	S	*38X60X9★	32
2.352	2.362	.354			
60,00	60,20	8,00	S	38X60X8★	32
2.362	2.370	.315			
60,00	60,20	10,00	V	*38X60X10V★	35
2.362	2.370	.394			
60,00	60,35	10,00	S	38X60X10★	32
2.362	2.376	.394			
60,00	60,35	10,00	S	223843★	35
2.362	2.376	.394			
60,25	60,50	12,00	S	*38X60.5X12★	32
2.372	2.382	.472			
61,75	62,00	9,00	S	*38X62X9★	32
2.431	2.441	.354			
61,75	62,00	10,00	S	*38X62X10★	32
2.431	2.441	.394			
61,75	62,00	12,00	S	*38X62X12★	32
2.431	2.441	.472			
62,00	62,10	6,00	S	710224★	49
2.441	2.445	.236			
62,00	62,20	7,00	V	*38X62X7V★	32
2.441	2.449	.276			
62,00	62,24	13,00	N	710209★	#
2.441	2.450	.512			
62,00	62,28	7,00	S	38X62X7★	32
2.441	2.452	.276			
63,00	63,12	10,00	N	2009★	#
2.480	2.485	.394			
63,25	63,50	10,00	S	*38X63.5X10★	32
2.490	2.500	.394			
64,75	65,00	10,00	S	*38X65X10★	32
2.549	2.559	.394			
64,75	65,00	11,00	S	*38X65X11★	32
2.549	2.559	.433			
64,75	65,00	13,00	S	*38X65X13★	32
2.549	2.559	.512			
65,00	65,20	8,00	S	38X65X8★	32
2.559	2.567	.315			

38,00mm (1.496") SHAFT (cont.)

Hsg. Bore	Seal O.D.	Seal Width	Lip Mat'l	Part No.	Type/ Illus.
65,00	65,20	8,00	S	710435★	32
2.559	2.567	.315			
65,00	65,27	12,00	N	1176★	#
2.559	2.570	.472			
68,00	68,20	8,00	S	38X68X8★	32
2.677	2.685	.315			
68,00	68,20	8,00	S	710165★	#
2.677	2.685	.315			
68,00	68,20	10,00	S	38X68X10★	32
2.677	2.685	.394			
70,00	70,20	10,00	S	38X70X10★	35
2.756	2.764	.394			
71,75	72,00	12,00	S	*38X72X12★	32
2.825	2.835	.472			
72,00	72,20	10,00	S	38X72X10★	35
2.835	2.843	.394			
74,00	74,20	8,00	S	38X74X8★	32
2.913	2.921	.315			
74,00	74,20	11,00	N	38X74X11★	32
2.913	2.921	.433			
74,00	74,27	11,00	N	1177★	32
2.913	2.924	.433			
74,00	74,27	11,00	S	*320834★	32
2.913	2.924	.433			
75,00	75,20	8,00	S	*38X75X8★	32
2.953	2.961	.315			
78,00	78,20	8,00	S	*38X78X8★	32
3.071	3.079	.315			
79,72	80,00	10,00	S	*38X80X10★	32
3.139	3.150	.394			
80,00	80,20	8,00	S	*38X80X8★	32
3.150	3.157	.315			
90,00	90,20	8,00	S	*38X90X8★	32
3.543	3.551	.315			

1.497" SHAFT

.000	2.226	.472	N	710510	#

1.500" (1-1/2") SHAFT

–	–	–	S	800381	VRS2
–	–	–	V	800385	VRS2
–	–	–	S	800400	VRS1
–	–	–	V	800404	VRS1
–	**–**	**.375**		**99150**	**Redi-Sleeve**
–	**–**	**.563**		**99149**	**Redi-Sleeve**
1.874	**1.879**	**.250**	**S**	**253099**	**25**
1.874	1.880	.250	S	343099	34
1.875	–	.188	S	710044	#
1.875	1.879	.187	S	*443527	44
1.938	1.942	.250	S	42260S	4S
1.938	1.942	.250	S	*312260	31
1.983	1.987	.250	L	40382	4L
1.983	1.987	.437	S	*452554	45
1.983	1.987	.437	N	452554N	45
1.983	1.987	.437	S	472554	47
1.983	1.987	.437	N	*482554N	48
1.983	1.988	.187	S	443018	44
1.983	1.988	.250	V	474276V	47
1.983	**1.988**	**.250**	**S**	**474276**	**47**
1.989	1.993	.250	L	41257	4L
1.989	1.993	.285	S	3677&	287
1.997	2.001	.531	S	6759S	1S
2.000	–	.250	U	710023	#
2.000	2.004	.312	V	481163V	48
2.000	**2.004**	**.312**	**S**	**481163**	**48**
2.000	2.004	.312	H	*481163H	48
2.000	2.005	.250	N	*492521N	49
2.000	2.006	.250	S	352521	32
2.000	2.010	.187	S	240319	24

For Illustration and Material Data See Technical Section

Designed For A Specific Application - Not Recommended For General Use ➡ Hydrodynamic Lip Design-CW & Flanged O.D.

* The U.S. customer service number is 877-4-TIMKEN. The Canadian customer service numbers are 800-565-4927 (English) and 800-565-0438 (French-Canadian). ★ Metric Seal

1.500" (1-1/2") SHAFT (cont.)

Hsg. Bore	Seal O.D.	Seal Width	Lip Mat'l	Part No.	Type/ Illus.
2.000	2.010	.187	N	*240319N	24
2.000	2.010	.219	S	*712139	35
2.000	2.010	.437	S	*350319	35
2.048	**2.052**	**.375**	**S**	**472466**	**47**
2.055	2.065	.276	N	321416	32
2.062	2.066	.240	S	7537S	24
2.062	2.066	.240	S	*340980	34
2.062	2.066	.250	F	6545	21
2.062	**2.066**	**.250**	**S**	**480630**	**48**
2.062	2.066	.375	N	*470991N	47
2.062	2.066	.375	S	480991	48
2.062	2.066	.437	S	*410451	41
2.062	2.066	.437	S	450451	45
2.062	2.066	.437	H	*450451H	45
2.062	2.066	.437	S	470451	47
2.062	2.066	.437	H	*470451H	47
2.062	2.066	.437	S	*480451	48
2.125	**2.129**	**.312**	**S**	**473227**	**47**
2.125	2.129	.312	N	*473227N	47
2.125	2.129	.312	V	473227V	47
2.125	2.129	.312	S	*483227	48
2.125	2.129	.437	S	*50394	5S
2.125	2.129	.437	S	*410394	41
2.125	2.129	.437	H	*410394H	41
2.125	2.129	.437	N	*410394N	41
2.125	2.129	.437	S	*450394	45
2.125	2.129	.437	N	*450394N	45
2.125	2.129	.437	V	*450394V	45
2.125	2.129	.437	S	470394	47
2.125	2.129	.437	H	*470394H	47
2.125	2.129	.437	N	*470394N	47
2.125	2.129	.437	S	*480394	48
2.125	2.134	.437	S	350394	35
2.187	2.187	.500	L	6312%	8L
2.192	2.196	.250	S	43078S	4S
2.222	**2.226**	**.312**	**S**	**480844**	**48**
2.247	2.253	.360	N	*9928H➡	75
2.249	2.253	.360	N	331228H➡	75
2.249	2.254	.250	S	5115➡	47
2.249	2.254	.280	S	*2205	#
2.250	–	.500	U	710020	#
2.250	**2.254**	**.312**	**S**	**470625**	**47**
2.250	2.254	.312	A	470625A	47
2.250	2.254	.312	N	*470625N	47
2.250	**2.254**	**.312**	**V**	**470625V**	**47**
2.250	2.254	.312	S	*480625	48
2.250	2.254	.312	V	480625V	48
2.250	2.254	.375	S	*450548	45
2.250	2.254	.375	N	*450548N	45
2.250	2.254	.375	S	470548	47
2.250	2.254	.375	U	710012	#
2.250	2.254	.500	S	*410136	41
2.250	2.254	.500	S	*450136	45
2.250	2.254	.500	N	*450136N	45
2.250	2.254	.500	N	*470136	47
2.250	2.254	.500	S	*480136	48
2.250	2.258	.250	S	340136	34
2.250	2.258	.250	H	*340136H	34
2.250	2.260	.312	S	322373	32
2.252	2.256	.375	V	*451507V	45
2.252	2.256	.375	S	*471507	47
2.252	2.256	.375	N	*471507N	47
2.252	2.256	.375	S	*481507	48
2.252	2.256	.375	H	*481507H	48
2.252	2.256	.375	N	*481507N	48
2.252	2.256	.375	V	*481507V	48
2.254	**2.258**	**.312**	**S**	**453065**	**45**
2.256	–	.270	S	200859%	200
2.260	2.264	.405	S	9363S	41
2.311	2.315	.500	V	712023	#
2.327	2.332	.406	S	*3428	204
2.327	2.332	.406	S	203013	203

1.500" (1-1/2") SHAFT (cont.)

Hsg. Bore	Seal O.D.	Seal Width	Lip Mat'l	Part No.	Type/ Illus.
2.327	2.332	.406	S	204013	204
2.328	2.332	.437	S	*472591	47
2.328	2.332	.437	S	*482591	48
2.372	2.376	.350	S	*2796	47
2.372	2.376	.420	N	2194⬅	88
2.372	2.376	1.458	S	7692S⬅	79
2.374	2.378	.250	N	*3120N	47
2.374	2.378	.250	S	40059S	4S
2.374	2.378	.312	S	*480380	48
2.374	2.378	.375	S	*451308	45
2.374	2.378	.375	S	*471308	47
2.374	2.378	.375	S	*481308	48
2.374	2.378	.500	S	*2326⬅	47
2.374	2.378	.500	N	*2326N⬅	47
2.374	2.378	.500	S	410059	41
2.374	2.378	.500	H	*410059H	41
2.374	2.378	.500	N	*410059N	41
2.374	2.378	.500	S	*450059	45
2.374	2.378	.500	H	*450059H	45
2.374	2.378	.500	N	*450059N	45
2.374	2.378	.500	V	*450059V	45
2.374	2.378	.500	S	470059	47
2.374	2.378	.500	H	*470059H	47
2.374	2.378	.500	N	*470059N	47
2.374	2.378	.500	S	*480059	48
2.374	2.378	.500	N	*480059N	48
2.374	2.378	.710	S	*3680	#
2.375	**2.378**	**.312**	**S**	**470380**	**47**
2.375	**2.378**	**.312**	**V**	**470380V**	**47**
2.375	2.379	.312	A	470380A	47
2.375	2.379	.602	N	9470&	57
2.377	2.381	.470	N	*7413⬅	71
2.377	2.381	.470	S	9613S⬅	71
2.377	2.381	.500	S	*2175⬅	47
2.377	2.381	.500	S	472189A⬅	47
2.385	2.389	.320	S	*8346	#
2.437	2.441	.250	S	7886S	48
2.437	2.441	.250	S	40063S	4S
2.437	**2.441**	**.375**	**S**	**471820**	**47**
2.437	2.441	.468	S	*410063	41
2.437	2.441	.468	S	*450063	45
2.437	2.441	.468	H	*450063H	45
2.437	2.441	.468	S	*470063	47
2.437	2.441	.468	S	*480063	48
2.441	**2.445**	**.375**	**S**	**471344**	**47**
2.441	2.445	.375	S	*481344	48
2.441	2.445	.500	S	*410814	41
2.441	2.445	.500	S	*450814	45
2.441	2.445	.500	S	*480814	48
2.462	2.482	.290	S	200861%	200E
2.500	2.500	.375	T	710414	#
2.502	2.506	.250	S	*40067S	4S
2.502	2.506	.312	V	473228V	47
2.502	**2.506**	**.312**	**S**	**473228**	**47**
2.502	2.506	.312	N	*473228N	47
2.502	2.506	.312	S	*483228	48
2.502	2.506	.375	L	6426	4L
2.502	2.506	.375	S	*471837	47
2.502	2.506	.375	S	481837	48
2.502	2.506	.435	L	51098L**	5L
2.502	2.506	.437	S	51098	48
2.502	2.506	.500	S	*410067	41
2.502	2.506	.500	H	*410067H	41
2.502	2.506	.500	S	450067	45
2.502	2.506	.500	N	*450067N	45
2.502	2.506	.500	S	*470067	47
2.502	2.506	.500	S	*480067	48
2.561	**2.565**	**.500**	**S**	**410190**	**41**
2.561	2.565	.500	S	*450190	45
2.561	2.565	.500	S	470190	47
2.561	2.565	.500	S	*480190	48
2.623	2.627	.250	S	41461S	4S

For Illustration and Material Data See Technical Section
Designed For A Specific Application - Not Recommended For General Use ➡ Hydrodynamic Lip Design-CW ⬅ Hydrodynamic Lip Design-CCW ** Canada Only
% External Bore & Flanged O.D.
* The U.S. customer service number is 877-4-TIMKEN. The Canadian customer service numbers are 800-565-4927 (English) and 800-565-0438 (French-Canadian).

1.500" (1-1/2") SHAFT (cont.)

Hsg. Bore	Seal O.D.	Seal Width	Lip Mat'l	Part No.	Type/ Illus.
2.623	2.627	.500	S	*411857	41
2.623	2.627	.500	N	*411857N	41
2.623	**2.627**	**.500**	**S**	**451857**	**45**
2.623	2.627	.500	S	*481857	48
2.686	2.690	.500	S	*410487	41
2.686	2.690	.500	S	*450487	45
2.686	2.690	.500	S	470487	47
2.686	**2.690**	**.500**	**N**	**470487N**	**47**
2.686	2.690	.500	S	*480487	48
2.716	2.720	.250	S	*43808	4S
2.716	2.720	.468	S	*410984	41
2.716	**2.720**	**.468**	**S**	**450984**	**45**
2.750	**2.754**	**.312**	**S**	**473440**	**47**
2.750	2.754	.500	S	*410461	41
2.750	2.754	.500	S	450461	45
2.750	2.754	.500	S	*470461	47
2.750	2.754	.500	S	*480461	48
2.758	2.762	.500	S	*410077	41
2.758	2.762	.500	S	*450077	45
2.758	2.762	.500	N	*450077N	45
2.758	2.762	.500	S	470077	47
2.758	2.762	.500	S	*480077	48
2.758	**2.763**	**.312**	**S**	**474281**	**47**
2.835	2.839	.468	S	471915	47
2.875	2.879	.468	S	*410523	41
2.875	**2.879**	**.468**	**S**	**450523**	**45**
2.875	2.879	.468	S	*470523	47
2.875	2.879	.468	S	*480523	48
2.996	3.001	.500	S	*410326	41
2.996	**3.001**	**.500**	**S**	**450326**	**45**
2.996	3.001	.500	S	*470326	47
2.996	3.001	.500	S	*480326	48
3.000	**3.005**	**.375**	**S**	**471958**	**47**
3.000	3.005	.375	S	*481958	48
3.000	3.005	.500	S	*451235	45
3.125	3.130	.625	S	*210914	21
3.150	**3.155**	**.500**	**S**	**472446**	**47**
3.189	3.194	.437	S	450540	45
3.350	3.355	.468	S	*450493	45
3.543	3.548	.375	S	*477340	47
3.543	3.548	.500	S	*415308	41
3.544	3.548	.500	S	455308	45

1.502" SHAFT

Hsg. Bore	Seal O.D.	Seal Width	Lip Mat'l	Part No.	Type/ Illus.
–	–	–	S	800400	VRS1
–	–	–	V	800404	VRS1
–	**–**	**.375**		**99150**	**Redi-Sleeve**
–	**–**	**.563**		**99149**	**Redi-Sleeve**
2.126	2.132	.492	N	4530⬅	96
2.377	2.381	.374	N	4583⬅	86

1.503" SHAFT

Hsg. Bore	Seal O.D.	Seal Width	Lip Mat'l	Part No.	Type/ Illus.
–	–	–	S	800400	VRS1
–	–	–	V	800404	VRS1
–	**–**	**.375**		**99150**	**Redi-Sleeve**
–	**–**	**.563**		**99149**	**Redi-Sleeve**
1.937	1.950	.475	N	710247	#
2.374	2.379	.374	N	4934	79
2.376	2.383	.420	N	4370N⬅	88

38,50mm (1.516") SHAFT

Hsg. Bore	Seal O.D.	Seal Width	Lip Mat'l	Part No.	Type/ Illus.
–	–	–	S	800400	VRS1
–	–	–	V	800404	VRS1
53,00	*53,23*	*8,00*	*N*	710233★➡	32
2.087	2.096	.315			
58,00	*58,20*	*8,50*	*N*	710318★➡	32
2.283	2.291	.335			

1.521" SHAFT

Hsg. Bore	Seal O.D.	Seal Width	Lip Mat'l	Part No.	Type/ Illus.
–	–	–	S	800400	VRS1
–	–	–	V	800404	VRS1
–	**–**	**.438**		**99152**	**Redi-Sleeve**
2.656	2.660	.424	S	8610➡	74
2.656	2.660	.594	S	8611N	74

1.523" SHAFT

Hsg. Bore	Seal O.D.	Seal Width	Lip Mat'l	Part No.	Type/ Illus.
–	–	–	S	800400	VRS1
–	–	–	V	800404	VRS1
–	**–**	**.438**		**99152**	**Redi-Sleeve**
2.714	2.718	.500	S	8940S	48

1.531" (1-17/32") SHAFT

Hsg. Bore	Seal O.D.	Seal Width	Lip Mat'l	Part No.	Type/ Illus.
–	–	–	S	800400	VRS1
–	–	–	V	800404	VRS1
2.374	**2.378**	**.375**	**S**	**452222**	**45**
2.374	2.378	.500	S	*410060	41
2.374	2.378	.500	V	*410060V	41
2.374	2.379	.375	S	472222	47
2.623	2.627	.250	S	*40369S	4S
2.623	2.627	.500	S	*410369	41

39,00mm (1.535") SHAFT

Hsg. Bore	Seal O.D.	Seal Width	Lip Mat'l	Part No.	Type/ Illus.
–	–	–	S	800400	VRS1
–	–	–	V	800404	VRS1
0,00	*53,20*	*8,00*	*N*	710451★	32
.000	2.094	.315			
50,00	*50,29*	*11,00*	*N*	710120★	#
1.969	1.980	.433			
50,50	*50,75*	*8,50*	*S*	1126★	25
1.988	1.998	.335			
50,75	*51,00*	*7,50*	*S*	*39X51X7.5★	32
1.998	2.008	.295			
50,80	*51,00*	*7,50*	*S*	1128★	35
2.000	2.008	.295			
52,00	*52,10*	*6,00*	*S*	710338★	66
2.047	2.051	.236			
52,00	*52,10*	*11,30*	*S*	1205N★	47
2.047	2.051	.445			
52,00	*52,30*	*11,30*	*S*	1205★	47
2.047	2.059	.445			
54,00	*54,10*	*6,00*	*S*	710404★	49
2.126	2.130	.236			
54,75	*55,00*	*9,00*	*S*	*39X55X9★	32
2.155	2.165	.354			
55,00	*55,11*	*7,50*	*S*	710158★	40
2.165	2.170	.295			
55,75	*56,00*	*7,00*	*S*	*39X56X7★	32
2.195	2.205	.276			
57,00	*57,20*	*17,00*	*N*	710123★	40
2.244	2.252	.669			
57,00	*57,20*	*21,50*	*N*	710122★	40
2.244	2.252	.846			
57,00	*57,38*	*9,65*	*V*	324204★➡	32
2.244	2.259	.380			
58,75	*59,00*	*8,00*	*S*	*39X59X8★	32
2.313	2.323	.315			
59,00	*59,28*	*11,00*	*N*	710214★	40
2.323	2.334	.433			
59,00	*59,30*	*11,00*	*S*	710118★	40
2.323	2.335	.433			
64,75	*65,00*	*8,00*	*S*	*39X65X8★	32
2.549	2.559	.315			

1.546" SHAFT

Hsg. Bore	Seal O.D.	Seal Width	Lip Mat'l	Part No.	Type/ Illus.
–	–	–	S	800400	VRS1
–	–	–	V	800404	VRS1
2.375	2.385	.500	S	*712144	32

For Illustration and Material Data See Technical Section

Designed For A Specific Application - Not Recommended For General Use ➡ Hydrodynamic Lip Design-CW ⬅ Hydrodynamic Lip Design-CCW

* The U.S. customer service number is 877-4-TIMKEN. The Canadian customer service numbers are 800-565-4927 (English) and 800-565-0438 (French-Canadian). ★ Metric Seal

1.550" SHAFT

Hsg. Bore	Seal O.D.	Seal Width	Lip Mat'l	Part No.	Type/ Illus.
–	–	–	S	800400	VRS1
–	–	–	V	800404	VRS1
–	**–**	**.438**		**99155**	**Redi-Sleeve**
2.686	2.690	.500	S	*3873	#
2.686	2.690	.500	L	8695L**	5L
2.686	2.690	.500	S	8695S⬅➡	47

1.552" SHAFT

Hsg. Bore	Seal O.D.	Seal Width	Lip Mat'l	Part No.	Type/ Illus.
–	–	–	S	800400	VRS1
–	–	–	V	800404	VRS1
–	**–**	**.438**		**99155**	**Redi-Sleeve**
2.447	2.452	.500	S	2922➡	86
2.447	2.452	.500	S	710046➡	86
2.502	2.506	.312	N	711552	47
2.502	2.506	.500	S	472635	47
2.502	2.506	.500	N	*472635N	47
2.623	2.627	.500	S	*473056	47
2.623	2.627	.500	N	*473056N	47
2.750	2.755	.415	S	4244⬅➡	72
3.160	3.165	.530	S	*4434	72
3.160	3.165	.530	N	*4434N	72
3.160	3.165	.530	N	5778	72
3.160	3.165	.608	V	4941V	#
3.160	3.165	.645	V	5778V	72

1.558" SHAFT

Hsg. Bore	Seal O.D.	Seal Width	Lip Mat'l	Part No.	Type/ Illus.
–	–	–	S	800400	VRS1
–	–	–	V	800404	VRS1
2.250	2.254	1.520	S	8935S&	79
2.372	2.376	.350	S	*2876&	74
2.372	2.376	1.500	S	2506&	79

39,60mm (1.559") SHAFT

Hsg. Bore	Seal O.D.	Seal Width	Lip Mat'l	Part No.	Type/ Illus.
51,75	*52,00*	*11,00*	*S*	*39.6X52X11★	32
2.037	2.047	.433			

1.562" (1-9/16") SHAFT

Hsg. Bore	Seal O.D.	Seal Width	Lip Mat'l	Part No.	Type/ Illus.
–	–	–	S	800400	VRS1
–	–	–	V	800404	VRS1
–	**–**	**.563**		**99156**	**Redi-Sleeve**
2.061	2.275	.338	S	1195	32
2.062	2.066	.200	S	7994S	44
2.062	2.066	.250	S	8421S	33
2.062	2.066	.250	S	*330749	33
2.062	2.066	.250	N	*330749N	33
2.062	2.066	.250	V	330749V	33
2.062	2.067	.188	T	39920➡	FW-H
2.094	2.098	.312	F	*712129	#
2.096	2.102	.250	S	340927	34
2.125	2.129	.375	T	39711➡	FW-H
2.125	**2.129**	**.375**	**S**	**473517**	**47**
2.125	2.129	.437	S	*411016	41
2.125	2.129	.437	S	*451016	45
2.125	2.129	.437	S	*471016	47
2.125	2.129	.437	S	*481016	48
2.125	2.129	.437	N	*481016N	48
2.237	2.257	.290	S	200887%	200E
2.250	**2.254**	**.312**	**S**	**472213**	**47**
2.250	2.254	.312	S	*482213	48
2.250	2.254	.500	S	*411084	41
2.250	2.254	.500	S	*451084	45
2.250	2.254	.500	H	*451084H	45
2.250	2.254	.500	S	*471084	47
2.250	2.254	.500	S	*481084	48
2.252	2.256	.375	S	*481279	48
2.252	2.256	.375	N	*481279N	48
2.320	2.326	.374	S	1873	35

1.562" (1-9/16") SHAFT (cont.)

Hsg. Bore	Seal O.D.	Seal Width	Lip Mat'l	Part No.	Type/ Illus.
2.374	2.378	.250	S	40438S	4S
2.374	**2.378**	**.312**	**S**	**472299**	**47**
2.374	2.378	.312	V	472299V	47
2.374	2.378	.312	S	*482299	48
2.374	2.378	.312	N	*482299N	48
2.374	2.378	.375	S	*471810	47
2.374	2.378	.375	V	*471810V	47
2.374	2.378	.375	S	*481810	48
2.374	2.378	.500	S	*410438	41
2.374	2.378	.500	S	*450438	45
2.374	2.378	.500	N	*450438N	45
2.374	2.378	.500	S	*470438	47
2.374	2.378	.500	S	*480438	48
2.374	2.378	.500	N	*480438N	48
2.375	2.379	.500	N	*3439N	#
2.437	**2.441**	**.375**	**S**	**471821**	**47**
2.437	2.441	.375	H	*471821H	47
2.437	2.441	.375	S	*481821	48
2.437	2.441	.468	S	*410064	41
2.437	2.441	.468	H	*410064H	41
2.437	2.441	.468	S	*450064	45
2.437	2.441	.468	N	*450064N	45
2.437	2.441	.468	S	470064	47
2.437	2.441	.468	S	*480064	48
2.437	2.441	.500	S	*450963	45
2.437	2.441	.500	S	*480963	48
2.441	**2.445**	**.375**	**S**	**471827**	**47**
2.441	2.445	.500	S	*470684	47
2.441	2.445	.781	S	*10684S	1S
2.441	2.457	.500	S	8160S	32
2.502	2.506	.250	L	40185	4L
2.502	2.506	.250	S	*42364S	4S
2.502	**2.506**	**.312**	**S**	**473229**	**47**
2.502	2.506	.312	S	*483229	48
2.502	2.506	.375	S	*470903	47
2.502	2.506	.500	V	450185V	45
2.502	2.506	.500	S	*410185	41
2.502	2.506	.500	S	450185	45
2.502	2.506	.500	H	*450185H	45
2.502	2.506	.500	N	*450185N	45
2.502	2.506	.500	S	*470185	47
2.502	2.506	.500	S	*480185	48
2.531	2.621	.285	S	200640%	200E
2.561	2.565	.500	S	*410143	41
2.561	**2.565**	**.500**	**S**	**450143**	**45**
2.561	2.565	.500	S	*470143	47
2.561	2.565	.500	S	*480143	48
2.623	**2.627**	**.312**	**S**	**470682**	**47**
2.623	2.627	.312	S	*480682	48
2.623	2.627	.500	S	*410262	41
2.623	2.627	.500	S	*450262	45
2.623	2.627	.500	S	*470262	47
2.623	2.627	.500	S	*480262	48
2.684	2.701	.250	S	6336S%	26
2.686	2.690	.375	L	5796	201
2.686	2.690	.375	H	*411316H	41
2.686	**2.690**	**.375**	**S**	**471316**	**47**
2.686	2.690	.375	S	*481316	48
2.686	2.690	.500	S	*410751	41
2.686	2.690	.500	S	*450751	45
2.686	2.690	.500	S	*470751	47
2.686	2.690	.500	S	*480751	48
2.716	2.720	.468	S	*410803	41
2.716	2.720	.468	S	450803	45
2.750	**2.754**	**.375**	**S**	**473441**	**47**
2.750	2.754	.500	S	*410109	41
2.750	2.754	.500	S	*450109	45
2.750	2.754	.500	S	*470109	47
2.750	2.754	.500	N	470109N	47
2.750	2.754	.500	S	*480109	48
2.758	2.762	.500	S	*410273	41
2.758	**2.762**	**.500**	**S**	**450273**	**45**

For Illustration and Material Data See Technical Section
Designed For A Specific Application - Not Recommended For General Use ➡ Hydrodynamic Lip Design-CW ⬅➡ Hydrodynamic Lip Design-Bidirectional ** Canada Only
% External Bore & Flanged O.D.
* The U.S. customer service number is 877-4-TIMKEN. The Canadian customer service numbers are 800-565-4927 (English) and 800-565-0438 (French-Canadian). ★ Metric Seal

Hsg. Bore	Seal O.D.	Seal Width	Lip Mat'l	Part No.	Type/ Illus.
1.562" (1-9/16") SHAFT (cont.)					
2.758	2.762	.500	S	⋆470273	47
2.758	2.762	.500	S	⋆480273	48
2.758	2.762	.500	N	⋆480273N	48
2.833	2.840	.493	V	4889	#
2.873	2.880	.493	V	4890	#
2.875	**2.879**	**.375**	**S**	**473442**	**47**
2.875	2.879	.468	S	⋆410418	41
2.875	2.879	.468	S	⋆450418	45
2.875	2.879	.468	S	⋆470418	47
2.875	2.879	.468	S	⋆480418	48
2.875	3.062	.468	N	⋆7525N	47
2.996	3.000	.312	S	⋆453510	45
2.996	3.001	.500	S	⋆411962	41
3.150	**3.155**	**.312**	**S**	**473490**	**47**
3.543	3.548	.375	S	476510	47
1.565" SHAFT					
–	–	–	S	800400	VRS1
–	–	–	V	800404	VRS1
–	**–**	**.563**		**99156**	**Redi-Sleeve**
2.372	2.382	.394	S	710198	#
1.574" SHAFT					
–	–	–	S	800400	VRS1
–	–	–	V	800404	VRS1
–	**–**	**.512**		**99157**	**Redi-Sleeve**
2.410	2.415	.540	V	714569⬅➡	#
2.676	2.683	.500	N	4141	#
40,00mm (1.575") SHAFT					
–	–	–	S	800400	VRS1
–	–	–	V	800404	VRS1
–	**–**	**.512**		**99157**	**Redi-Sleeve**
0,00	*58,24*	*5,99*	*S*	710505★	32
.000	2.293	.236			
0,00	*72,00*	*11,00*	*S*	710523★	#
.000	2.835	.433			
49,80	*50,00*	*5,00*	*S*	⋆40X50X5★	32
1.961	1.969	.197			
49,80	*50,00*	*6,50*	*S*	⋆40X50X6.5★	32
1.961	1.969	.256			
49,80	*50,00*	*7,00*	*S*	⋆40X50X7★	32
1.961	1.969	.276			
49,80	*50,00*	*10,00*	*S*	⋆40X50X10★	32
1.961	1.969	.394			
50,00	*50,20*	*8,00*	*S*	40X50X8★	35
1.969	1.976	.315			
51,75	*52,00*	*6,00*	*S*	⋆40X52X6★	32
2.037	2.047	.236			
51,75	*52,00*	*8,00*	*S*	⋆40X52X8★	32
2.037	2.047	.315			
51,75	*52,00*	*9,00*	*S*	⋆40X52X9★	32
2.037	2.047	.354			
51,75	*52,00*	*10,00*	*S*	⋆40X52X10★	32
2.037	2.047	.394			
52,00	*0,00*	*7,00*	*V*	224053★	32
2.047	.000	.276			
52,00	*52,12*	*7,50*	*S*	⋆3967★	#
2.047	2.052	.295			
52,00	*52,12*	*8,00*	*S*	⋆3609★	47
2.047	2.052	.315			
52,00	*52,12*	*8,50*	*S*	1962★&	78
2.047	2.052	.335			
52,00	*52,20*	*6,00*	*S*	710308★➡	32
2.047	2.055	.236			
52,00	*52,20*	*6,50*	*S*	239201★&	32
2.047	2.055	.256			
40,00mm (1.575") SHAFT (cont.)					
52,00	*52,20*	*7,00*	*V*	⋆40X52X7V★	32
2.047	2.055	.276			
52,00	*52,22*	*9,00*	*S*	4175★	#
2.047	2.056	.354			
52,00	*52,25*	*6,00*	*S*	1178★	32
2.047	2.057	.236			
52,00	*52,25*	*7,00*	*S*	40X52X7★	32
2.047	2.057	.276			
52,00	*52,28*	*7,00*	*S*	224010★	35
2.047	2.058	.276			
52,00	*52,28*	*7,00*	*S*	224015★	32
2.047	2.058	.276			
52,00	*52,28*	*7,00*	*H*	224052★➡	32
2.047	2.058	.276			
52,00	*52,28*	*9,00*	*N*	1217★&	35
2.047	2.058	.354			
52,75	*53,00*	*8,00*	*S*	⋆40X53X8★	32
2.077	2.087	.315			
53,75	*54,00*	*7,00*	*S*	⋆40X54X7★	32
2.116	2.126	.276			
53,75	*54,00*	*8,00*	*S*	⋆40X54X8★	32
2.116	2.126	.315			
53,75	*54,00*	*10,00*	*S*	⋆40X54X10★	32
2.116	2.126	.394			
53,90	*54,00*	*6,00*	*S*	710444★⬅	32
2.122	2.126	.236			
54,00	*54,10*	*5,50*	*S*	1213★	47
2.126	2.130	.217			
54,00	*54,10*	*5,50*	*S*	1213N★	47
2.126	2.130	.217			
54,00	*54,10*	*8,00*	*S*	710311★	25
2.126	2.130	.315			
54,00	*54,20*	*5,50*	*S*	40X54X6★	47
2.126	2.134	.217			
54,00	*54,20*	*10,00*	*N*	710287★⬅➡	32
2.126	2.134	.394			
54,75	*55,00*	*7,00*	*S*	⋆40X55X7★	32
2.155	2.165	.276			
54,75	*55,00*	*10,00*	*S*	⋆40X55X10★	32
2.155	2.165	.394			
54,89	*55,00*	*13,00*	*N*	710443★	#
2.161	2.165	.512			
55,00	*55,09*	*8,00*	*S*	473677★	47
2.165	2.169	.315			
55,00	*55,09*	*8,00*	*S*	⋆476677★	47
2.165	2.169	.315			
55,00	*55,17*	*9,60*	*S*	3392★⬅➡	47
2.165	2.172	.378			
55,00	*55,20*	*6,50*	*S*	40X55X6★	35
2.165	2.173	.256			
55,00	*55,20*	*8,00*	*V*	⋆40X55X8V★	32
2.165	2.173	.315			
55,00	*55,28*	*8,00*	*S*	40X55X8★	32
2.165	2.176	.315			
55,00	*55,28*	*9,00*	*S*	224020★➡	32
2.165	2.176	.315			
55,75	*56,00*	*8,00*	*S*	⋆40X56X8★	32
2.195	2.205	.315			
55,75	*56,00*	*8,00*	*S*	⋆40X56X8★	32
2.195	2.205	.315			
55,75	*56,00*	*8,00*	*S*	⋆40X56X8★	32
2.195	2.205	.315			
56,00	*56,20*	*7,00*	*S*	40X56X7★	32
2.205	2.213	.276			
56,00	*56,20*	*8,00*	*V*	⋆40X56X8V★	35
2.205	2.213	.315			
56,00	*56,20*	*9,00*	*S*	710300★	#
2.205	2.213	.354			
56,00	*56,20*	*10,00*	*S*	40X56X10★	35
2.205	2.213	.394			
56,00	*56,25*	*7,00*	*N*	224025★➡	32
2.205	2.215	.276			

For Illustration and Material Data See Technical Section
Designed For A Specific Application - Not Recommended For General Use ➡ Hydrodynamic Lip Design-CW ⬅ Hydrodynamic Lip Design-CCW
⬅➡ Hydrodynamic Lip Design-Bidirectional & Flanged O.D.
⋆ The U.S. customer service number is 877-4-TIMKEN. The Canadian customer service numbers are 800-565-4927 (English) and 800-565-0438 (French-Canadian). ★ Metric Seal

40,00mm (1.575") SHAFT (cont.)

Hsg. Bore	Seal O.D.	Seal Width	Lip Mat'l	Part No.	Type/ Illus.
56,00	56,26	7,00	V	* 350612★	35
2.205	2.215	.276			
56,00	56,26	8,00	S	712551★	32
2.205	2.215	.315			
56,00	56,26	9,00	V	224026★	35
2.205	2.215	.354			
56,75	57,00	7,00	S	* 40X57X7★	32
2.234	2.244	.276			
56,90	57,15	10,00	S	* 40X57.15X10★	32
2.240	2.250	.394			
57,00	57,20	10,00	S	40X57X10★	32
2.244	2.252	.394			
57,00	57,20	10,00	S	710432★	32
2.244	2.252	.394			
57,75	58,00	6,50	S	* 40X58X6.5★	32
2.273	2.283	.256			
58,00	58,14	9,00	N	3459★⬅➡	74
2.283	2.289	.354			
58,00	58,20	8,00	S	40X58X8★	32
2.283	2.291	.315			
58,00	58,20	10,00	V	* 40X58X10V★	35
2.283	2.291	.394			
58,00	58,28	10,00	S	40X58X10★	32
2.283	2.294	.394			
58,75	59,00	10,00	S	* 40X59X10★	32
2.313	2.323	.394			
59,75	60,00	7,00	S	* 40X60X7★	32
2.352	2.362	.276			
59,75	60,00	12,00	S	* 40X60X12★	32
2.352	2.362	.472			
60,00	60,20	8,00	S	710147★	#
2.362	2.370	.315			
60,00	60,20	10,00	S	224040★	35
2.362	2.370	.394			
60,00	60,20	10,00	S	40X60X10★	32
2.362	2.370	.394			
60,00	60,20	10,00	V	* 40X60X10V★	35
2.362	2.370	.394			
60,00	60,20	10,00	S	* 1078★	33
2.362	2.370	.394			
61,75	62,00	9,00	S	* 40X62X9★	32
2.431	2.441	.354			
61,75	62,00	10,00	S	* 40X62X10★	32
2.431	2.441	.394			
61,75	62,00	11,00	S	* 40X62X11★	32
2.431	2.441	.433			
61,75	62,00	11,50	S	* 40X62X11.5★	32
2.431	2.441	.453			
62,00	62,20	7,00	S	40X62X7★	35
2.441	2.449	.276			
62,00	62,20	7,00	V	* 40X62X7V★	32
2.441	2.449	.276			
62,00	62,20	9,00	S	710131★	#
2.441	2.449	.354			
62,00	62,25	8,00	S	40X62X8★	32
2.441	2.451	.315			
62,00	62,25	10,00	S	* 1179★	#
2.441	2.451	.394			
62,00	62,25	11,50	S	40X62X12★	35
2.441	2.451	.453			
62,00	62,27	10,00	V	710196★	32
2.441	2.452	.394			
62,00	62,27	11,00	S	224045★	32
2.441	2.452	.433			
62,00	62,30	6,50	S	710227★	#
2.441	2.453	.256			
62,25	62,50	11,00	S	* 40X62.5X11★	32
2.451	2.461	.433			
62,75	63,00	7,00	S	* 40X63X7★	32
2.470	2.480	.276			
63,00	63,30	8,00	N	224063★➡	32
2.480	2.492	.315			

40,00mm (1.575") SHAFT (cont.)

Hsg. Bore	Seal O.D.	Seal Width	Lip Mat'l	Part No.	Type/ Illus.
63,25	63,50	10,00	S	* 40X63.5X10★	32
2.490	2.500	.394			
63,75	64,00	10,00	S	* 40X64X10★	32
2.510	2.520	.394			
63,75	64,00	12,00	S	* 40X64X12★	32
2.510	2.520	.472			
64,00	64,00	11,98	N	1216★&	74
2.520	2.520	.472			
64,00	64,10	12,00	N	1216N★&	74
2.520	2.524	.472			
64,00	64,10	12,00	S	710326★	66
2.520	2.524	.472			
64,75	65,00	8,00	S	* 40X65X8★	32
2.549	2.559	.315			
64,75	65,00	12,00	S	* 40X65X12★	32
2.549	2.559	.472			
65,00	65,13	9,53	S	474161★	47
2.559	2.564	.375			
65,00	65,20	20,00	S	710134★	#
2.559	2.567	.787			
65,00	65,28	10,00	S	40X65X10★	32
2.559	2.570	.394			
65,00	65,28	10,00	S	224100★	35
2.559	2.570	.394			
66,00	66,30	8,00	N	224066★➡	40
2.598	2.610	.315			
67,75	68,00	7,00	S	* 40X68X7★	32
2.667	2.677	.276			
67,75	68,00	10,00	S	* 40X68X10★	32
2.667	2.677	.394			
68,00	68,10	9,00	N	224068★	40
2.677	2.681	.354			
68,00	68,25	12,00	S	40X68X12★	35
2.677	2.687	.472			
68,00	68,80	8,00	S	40X68X8★	35
2.677	2.709	.315			
69,75	70,00	10,00	S	* 40X70X10★	32
2.746	2.756	.394			
69,75	70,00	12,00	S	* 40X70X12★	32
2.746	2.756	.472			
70,00	70,20	8,00	S	40X70X8★	32
2.756	2.764	.315			
71,75	72,00	10,00	S	* 40X72X10★	32
2.825	2.835	.394			
71,75	72,00	12,00	S	* 40X72X12★	32
2.825	2.835	.472			
72,00	72,35	7,00	S	40X72X7★	35
2.835	2.848	.276			
72,00	72,35	7,00	V	350572★	35
2.835	2.848	.276			
73,00	73,10	10,00	N	710284★	#
2.874	2.878	.394			
73,75	74,00	10,00	S	* 40X74X10★	32
2.903	2.913	.394			
74,00	74,12	10,00	S	474133★	47
2.913	2.918	.394			
74,00	74,20	8,00	S	* 40X74X8★	32
2.913	2.921	.315			
74,75	75,00	10,00	S	* 40X75X10★	32
2.943	2.953	.394			
74,75	75,00	13,00	S	* 40X75X13★	32
2.943	2.953	.512			
75,00	75,20	8,00	S	40X75X8★	32
2.953	2.961	.315			
75,00	75,20	12,00	S	712011★	32
2.953	2.961	.472			
75,00	75,26	12,00	N	2011★➡	40
2.953	2.963	.472			
75,00	75,26	18,00	N	712020★⬅	32
2.953	2.963	.709			
75,00	75,30	12,00	S	* 710050★	32
2.953	2.965	.472			

For Illustration and Material Data See Technical Section
Designed For A Specific Application - Not Recommended For General Use ➡ Hydrodynamic Lip Design-CW ⬅ Hydrodynamic Lip Design-CCW
⬅➡ Hydrodynamic Lip Design-Bidirectional & Flanged O.D.
* The U.S. customer service number is 877-4-TIMKEN. The Canadian customer service numbers are 800-565-4927 (English) and 800-565-0438 (French-Canadian). ★ Metric Seal

Hsg. Bore	Seal O.D.	Seal Width	Lip Mat'l	Part No.	Type/ Illus.
40,00mm (1.575") SHAFT (cont.)					
75,00	*75,30*	*12,00*	*S*	710113★	#
2.953	2.965	.472			
75,75	*76,00*	*8,00*	*S*	∗40X76X8★	32
2.982	2.992	.315			
76,00	*76,25*	*8,00*	*S*	1036★➡	40
2.992	3.002	.315			
76,00	*76,28*	*12,50*	*N*	1146★⬅	32
2.992	3.003	.492			
78,00	*78,20*	*10,00*	*S*	40X78X10★	35
3.071	3.079	.394			
78,00	*78,80*	*8,00*	*S*	40X78X8★	32
3.071	3.102	.315			
79,72	*80,00*	*7,00*	*S*	∗40X80X7★	32
3.139	3.150	.276			
79,72	*80,00*	*12,00*	*S*	∗40X80X12★	32
3.139	3.150	.472			
80,00	*80,20*	*10,00*	*V*	∗40X80X10V★	32
3.150	3.157	.394			
80,00	*80,28*	*10,00*	*S*	40X80X10★	35
3.150	3.161	.394			
80,22	*80,50*	*10,00*	*S*	∗40X80.5X10★	32
3.158	3.169	.394			
82,00	*82,20*	*8,00*	*S*	∗40X82X8★	32
3.228	3.236	.315			
85,00	*85,20*	*8,00*	*S*	∗40X85X8★	32
3.346	3.354	.315			
88,00	*88,20*	*8,00*	*S*	∗40X88X8★	32
3.465	3.472	.315			
89,72	*90,00*	*10,00*	*S*	∗40X90X10★	32
3.532	3.543	.394			
89,72	*90,00*	*12,00*	*S*	∗40X90X12★	32
3.532	3.543	.472			
90,00	*90,20*	*8,00*	*S*	40X90X8★	35
3.543	3.551	.315			
1.578" SHAFT					
–	–	–	S	800400	VRS1
–	–	–	V	800404	VRS1
–	**–**	**.512**		**99157**	**Redi-Sleeve**
2.000	2.004	.250	S	43074S	4S
2.408	**2.412**	**.500**	**S**	**450666**	**45**
1.593" (1-19/32") SHAFT					
–	–	–	S	800400	VRS1
–	–	–	V	800404	VRS1
2.437	**2.441**	**.468**	**S**	**450065**	**45**
2.437	2.441	.500	S	∗482042	48
2.502	**2.506**	**.250**	**S**	**482253**	**48**
2.502	2.506	.250	N	∗482253N	48
2.502	2.506	.281	N	∗482605N	48
2.502	2.506	.375	S	∗481838	48
2.502	2.506	.500	S	∗450258	45
2.623	2.627	.340	S	451469	45
2.623	2.627	.500	S	∗451858	45
2.623	2.627	.500	H	∗451858H	45
2.758	2.762	.500	S	450274	45
2.758	2.762	.500	H	∗450274H	45
1.594" SHAFT					
–	–	–	S	800400	VRS1
–	–	–	V	800404	VRS1
.000	2.291	.354	N	710512	40
52,50	*52,70*	*6,00*	*N*	710436★➡	35
2.067	2.075	.236			
2.125	**2.129**	**.250**	**S**	**480581**	**48**
2.125	2.129	.281	S	∗481384	48
2.125	2.129	.281	N	∗481384N	48
2.125	2.129	.281	V	∗481384V	48
1.594" SHAFT (cont.)					
58,00	*58,23*	*8,00*	*S*	710140★	32
2.283	2.293	.315			
1.598" SHAFT					
–	–	–	S	800400	VRS1
–	–	–	V	800404	VRS1
2.476	2.483	.350	N	4765⬅	79
2.476	2.483	.420	N	4764⬅	86
1.603" SHAFT					
–	–	–	S	800400	VRS1
–	–	–	V	800404	VRS1
–	**–**	**.500**		**99160**	**Redi-Sleeve**
2.282	2.292	.530	N	∗7456N&	94
2.375	2.379	.187	N	∗8073	#
1.605" SHAFT					
–	–	–	S	800400	VRS1
–	–	–	V	800404	VRS1
–	**–**	**.500**		**99160**	**Redi-Sleeve**
2.374	2.386	.375	S	1192	32
2.560	2.565	.693	N	714679⬅➡	#
2.795	2.804	.364	N	4674N⬅➡	#
1.609" SHAFT					
–	–	–	S	800400	VRS1
–	–	–	V	800404	VRS1
2.435	2.441	.300	V	2658V	75
2.435	2.441	.300	H	2658➡	75
2.750	2.754	.500	S	∗413310	41
1.610" SHAFT					
–	–	–	S	800400	VRS1
–	–	–	V	800404	VRS1
2.500	2.531	.300	S	6283S	26
41,00mm (1.614") SHAFT					
–	–	–	S	800400	VRS1
–	–	–	V	800404	VRS1
50,75	*51,00*	*5,00*	*S*	∗41X51X5★	32
1.998	2.008	.197			
52,75	*53,00*	*7,00*	*S*	∗41X53X7★	32
2.077	2.087	.276			
53,00	*53,25*	*7,00*	*S*	1950★	41
2.087	2.096	.276			
53,75	*54,00*	*7,00*	*S*	∗41X54X7★	32
2.116	2.126	.276			
54,00	*54,23*	*7,00*	*N*	224150★	35
2.126	2.135	.276			
55,00	*55,29*	*7,00*	*S*	41X55X7★	32
2.165	2.177	.276			
55,00	*55,29*	*7,00*	*S*	1180★	32
2.165	2.177	.276			
55,45	*55,70*	*9,00*	*S*	∗41X55.7X9★	32
2.183	2.193	.354			
56,00	*0,00*	*8,00*	*V*	711181★	32
2.205	.000	.315			
56,00	*56,25*	*7,00*	*S*	41X56X7★	32
2.205	2.215	.276			
56,00	*56,25*	*7,00*	*S*	1181★	35
2.205	2.215	.276			
59,00	*59,10*	*10,00*	*N*	710114★➡	98
2.323	2.327	.394			
61,00	*61,20*	*10,00*	*N*	710141★⬅	#
2.402	2.409	.394			

For Illustration and Material Data See Technical Section
Designed For A Specific Application - Not Recommended For General Use ➡ Hydrodynamic Lip Design-CW ⬅ Hydrodynamic Lip Design-CCW
⬅➡ Hydrodynamic Lip Design-Bidirectional & Flanged O.D.
∗ The U.S. customer service number is 877-4-TIMKEN. The Canadian customer service numbers are 800-565-4927 (English) and 800-565-0438 (French-Canadian). ★ Metric Seal

41,00mm (1.614") SHAFT (cont.)

Hsg. Bore	Seal O.D.	Seal Width	Lip Mat'l	Part No.	Type/ Illus.
62,00	*62,20*	*8,00*	*S*	*41X62X8★	32
2.441	2.449	.315			
62,00	*62,23*	*9,00*	*N*	710220★➡	32
2.441	2.450	.354			
63,00	*63,20*	*9,00*	*N*	710291★⬅	40
2.480	2.488	.354			
63,75	*64,00*	*10,00*	*S*	*41X64X10★	32
2.510	2.520	.394			
68,00	*68,20*	*13,00*	*S*	710402★	#
2.677	2.685	.512			

1.618" SHAFT

Hsg. Bore	Seal O.D.	Seal Width	Lip Mat'l	Part No.	Type/ Illus.
–	–	–	S	800400	VRS1
–	–	–	V	800404	VRS1
2.000	2.004	.235	S	*484206	48
2.124	2.128	.250	V	*483525V	48
2.531	2.535	.750	S	8477S	48
2.574	2.579	.460	S	*3983⬅➡	47
2.575	2.579	.460	L	8835L**	33
2.575	2.579	.500	S	8835S⬅➡	33
2.841	2.849	.500	N	4762N⬅➡	74

1.625" (1-5/8") SHAFT

Hsg. Bore	Seal O.D.	Seal Width	Lip Mat'l	Part No.	Type/ Illus.
–	–	–	S	800400	VRS1
–	–	–	V	800404	VRS1
–	**–**	**.313**		***99161**	**Redi-Sleeve**
–	**–**	**.563**		**99162**	**Redi-Sleeve**
2.000	**2.004**	**.250**	**S**	**473694**	**47**
2.087	2.091	.275	S	*413799	41
2.116	**2.120**	**.312**	**S**	**472419**	**47**
2.116	2.120	.312	N	*472419N	47
2.116	2.127	.312	S	324939	32
2.125	**2.129**	**.250**	**S**	**481181**	**48**
2.125	2.129	.250	H	*481181H	48
2.125	2.129	.250	N	481181N	48
2.250	**2.254**	**.312**	**S**	**473230**	**47**
2.250	2.254	.312	S	*483230	48
2.250	2.254	.312	V	483230V	48
2.250	2.254	.500	S	*410755	41
2.250	2.254	.500	S	*450755	45
2.250	2.254	.500	S	*450755H	45
2.250	2.254	.500	S	*470755	47
2.250	2.254	.500	S	*480755	48
2.251	2.255	.375	S	1999	48
2.251	2.256	.375	S	*471289	47
2.251	2.256	.375	S	*481289	48
2.282	2.286	.313	S	710204	48
2.327	2.332	.406	S	204017	204
2.327	2.332	.440	S	*204075	204
2.328	2.332	.406	F	205017	205
2.328	2.332	.437	S	473117	47
2.328	2.332	.437	N	*473117N	47
2.374	2.378	.312	V	473231V	47
2.374	**2.378**	**.312**	**S**	**473231**	**47**
2.374	2.378	.312	A	473231A	47
2.374	2.378	.312	S	*483231	48
2.374	2.378	.375	S	*471150	47
2.374	2.378	.375	S	*481150	48
2.374	2.378	.375	H	*481150H	48
2.374	2.378	.375	N	*481150N	48
2.374	2.378	.437	S	453341	45
2.374	2.378	.500	S	*410358	41
2.374	2.378	.500	H	*410358H	41
2.374	2.378	.500	N	*410358N	41
2.374	2.378	.500	S	*450358	45
2.374	2.378	.500	N	*450358N	45
2.374	2.378	.500	S	470358	47
2.374	2.378	.500	H	*470358H	47
2.374	2.378	.500	N	470358N	47

1.625" (1-5/8") SHAFT (cont.)

Hsg. Bore	Seal O.D.	Seal Width	Lip Mat'l	Part No.	Type/ Illus.
2.374	2.378	.500	S	*480358	48
2.374	2.378	.500	N	*710358	45
2.374	2.385	.375	S	*321150	32
2.437	2.441	.250	S	*40066S	4S
2.437	2.441	.312	V	473367V	47
2.437	**2.441**	**.312**	**S**	**473367**	**47**
2.437	2.441	.312	V	483367V	48
2.437	2.441	.375	S	471419	47
2.437	2.441	.375	S	*481419	48
2.437	2.441	.375	H	*481419H	48
2.437	2.441	.468	S	*410066	41
2.437	2.441	.468	S	450066	45
2.437	2.441	.468	N	*450066N	45
2.437	2.441	.468	S	470066	47
2.437	2.441	.468	S	*480066	48
2.437	2.441	.500	S	*452401	45
2.437	2.441	.500	V	*452401V	45
2.437	2.441	.500	S	*482401	48
2.437	2.441	.500	V	*482401V	48
2.440	2.444	.500	S	*710063	#
2.441	**2.445**	**.375**	**S**	**471829**	**47**
2.441	2.445	.375	V	471829V	47
2.441	2.445	.500	S	*410795	41
2.448	2.502	.250	F	*6356	29
2.462	–	.250	S	200641%	200E
2.502	2.506	.250	S	*472758	47
2.502	2.506	.250	N	*472758N	47
2.502	2.506	.250	V	472758V	47
2.502	2.506	.250	S	*482758	48
2.502	2.506	.312	V	473010V	47
2.502	**2.506**	**.312**	**S**	**473010**	**47**
2.502	2.506	.312	A	473010A	47
2.502	2.506	.312	N	473010N	47
2.502	2.506	.312	S	*483010	48
2.502	2.506	.312	N	*483010N	48
2.502	2.506	.375	N	*451839N	45
2.502	2.506	.375	S	*471839	47
2.502	2.506	.375	H	*471839H	47
2.502	2.506	.375	N	*471839N	47
2.502	2.506	.375	S	*481839	48
2.502	2.506	.375	N	*481839N	48
2.502	2.506	.500	S	*410194	41
2.502	2.506	.500	V	410194V	41
2.502	2.506	.500	S	450194	45
2.502	2.506	.500	H	*450194H	45
2.502	2.506	.500	N	*450194N	45
2.502	2.506	.500	S	*470194	47
2.502	2.506	.500	S	*480194	48
2.562	2.565	.375	S	474216	47
2.562	2.566	.250	S	204500	4S
2.562	2.566	.375	F	291099	29
2.562	2.566	.437	S	4763S	#
2.623	2.627	.250	S	*42135S	4S
2.623	**2.627**	**.312**	**S**	**473232**	**47**
2.623	2.627	.312	S	*483232	48
2.623	2.627	.500	S	*410069	41
2.623	2.627	.500	S	450069	45
2.623	2.627	.500	N	*450069N	45
2.623	2.627	.500	V	*450069V	45
2.623	2.627	.500	S	*470069	47
2.623	2.627	.500	H	*470069H	47
2.623	2.627	.500	S	*480069	48
2.625	2.629	.250	S	40568S	4S
2.625	2.629	.500	T	50568➡	5S
2.625	2.629	.500	T	50569	5S
2.686	**2.690**	**.375**	**S**	**481864**	**48**
2.686	2.690	.375	H	*481864H	48
2.686	2.690	.500	S	*450072	45
2.686	2.690	.500	S	*480072	48
2.722	2.727	.406	F	5727	205
2.750	2.754	.180	N	*8994N	48
2.750	2.754	.250	L	40286	4L

For Illustration and Material Data See Technical Section
Designed For A Specific Application - Not Recommended For General Use ➡ Hydrodynamic Lip Design-CW ⬅ Hydrodynamic Lip Design-CCW
⬅➡ Hydrodynamic Lip Design-Bidirectional ** Canada Only % External Bore
* The U.S. customer service number is 877-4-TIMKEN. The Canadian customer service numbers are 800-565-4927 (English) and 800-565-0438 (French-Canadian). ★ Metric Seal

Hsg. Bore	Seal O.D.	Seal Width	Lip Mat'l	Part No.	Type/ Illus.
1.625" (1-5/8") SHAFT (cont.)					
2.750	2.754	.250	S	*42754S	4S
2.750	2.754	.312	S	*474247	47
2.750	**2.754**	**.312**	**S**	**474274**	**47**
2.750	2.754	.375	S	473443	47
2.750	2.754	.500	S	*410286	41
2.750	2.754	.500	N	*410286N	41
2.750	2.754	.500	S	*450286	45
2.750	2.754	.500	N	*450286N	45
2.750	2.754	.500	S	470286	47
2.750	2.754	.500	S	*480286	48
2.758	2.762	.500	S	450275	45
2.758	2.762	.500	S	*480275	48
2.835	**2.839**	**.468**	**S**	**450819**	**45**
2.875	**2.879**	**.375**	**S**	**473444**	**47**
2.875	2.879	.375	V	473444V	47
2.875	2.879	.437	N	*411923N	41
2.875	2.879	.437	N	471923N	47
2.875	2.879	.468	S	450078	45
2.875	2.879	.468	S	*480078	48
2.875	2.879	.500	S	*452170	45
2.875	2.879	.500	S	*482170	48
2.996	3.001	.500	S	450415	45
2.996	3.001	.500	S	*480415	48
3.000	**3.004**	**.312**	**S**	**414268**	**41**
3.000	3.005	.500	S	*410539	41
3.000	3.005	.500	N	*410539N	41
3.000	3.005	.500	S	450539	45
3.000	3.005	.500	S	*480539	48
3.062	3.066	.500	S	450335	45
3.125	3.130	.500	N	*411978N	41
3.251	3.256	.500	S	*410467	41
3.251	3.256	.500	S	450467	45
3.543	3.548	.375	S	*477104	47
3.937	3.942	.375	S	*476878	47
1.628" SHAFT					
–	–	–	S	800400	VRS1
–	–	–	V	800404	VRS1
–	**–**	**.313**		***99161**	**Redi-Sleeve**
–	**–**	**.563**		**99162**	**Redi-Sleeve**
2.122	2.126	.343	S	710202	#
2.278	2.282	.343	S	710241	68
1.630" SHAFT					
–	–	–	S	800400	VRS1
–	–	–	V	800404	VRS1
2.415	2.441	.492	N	4143	#
41,70mm (1.642") SHAFT					
54,75	*55,00*	*7,00*	*S*	*41.7X55X7★	32
2.155	2.165	.276			
54,75	*55,00*	*10,00*	*S*	*41.7X55X10★	32
2.155	2.165	.394			
1.645" SHAFT					
–	–	–	S	800400	VRS1
–	–	–	V	800404	VRS1
2.656	2.660	.406	N	8620N	47
1.650" SHAFT					
–	–	–	S	800400	VRS1
–	–	–	V	800404	VRS1
–	**–**	**.445**		**99166**	**Redi-Sleeve**
–	**–**	**.563**		**99169**	**Redi-Sleeve**
2.282	2.336	.768	H	3083➡	48
2.410	2.414	.361	S	710102	#
1.652" SHAFT					
–	–	–	S	800400	VRS1
–	–	–	V	800404	VRS1
–	**–**	**.445**		**99166**	**Redi-Sleeve**
–	**–**	**.563**		**99169**	**Redi-Sleeve**
2.518	2.524	.394	S	3622⬅➡	74
42,00mm (1.654") SHAFT					
–	–	–	S	800400	VRS1
–	–	–	V	800404	VRS1
–	**–**	**.445**		**99166**	**Redi-Sleeve**
–	**–**	**.563**		**99169**	**Redi-Sleeve**
49,80	*50,00*	*6,00*	*S*	*42X50X6★	32
1.961	1.969	.236			
49,80	*50,00*	*7,00*	*S*	*42X50X7★	32
1.961	1.969	.276			
51,75	*52,00*	*4,00*	*S*	*42X52X4★	32
2.037	2.047	.157			
51,75	*52,00*	*6,00*	*S*	*42X52X6★	32
2.037	2.047	.236			
51,75	*52,00*	*7,00*	*S*	*42X52X7★	32
2.037	2.047	.276			
53,75	*54,00*	*7,00*	*S*	*42X54X7★	32
2.116	2.126	.276			
54,75	*55,00*	*9,00*	*S*	*42X55X9★	32
2.155	2.165	.354			
54,89	*55,00*	*8,00*	*S*	1214★	47
2.161	2.165	.315			
54,89	*55,00*	*8,00*	*S*	1214N★	47
2.161	2.165	.315			
55,00	*55,12*	*8,00*	*H*	3051★➡	33
2.165	2.170	.315			
55,00	*55,12*	*8,00*	*H*	3051N★➡	33
2.165	2.170	.315			
55,00	*55,20*	*7,00*	*S*	42X55X7★	32
2.165	2.173	.276			
55,00	*55,20*	*7,50*	*S*	224200★	32
2.165	2.173	.295			
55,00	*55,20*	*8,00*	*V*	*42X55X8V★	35
2.165	2.173	.315			
55,00	*55,28*	*8,00*	*S*	224210★	35
2.165	2.176	.315			
55,00	*55,28*	*8,00*	*S*	42X55X8★	35
2.165	2.176	.315			
55,00	*55,33*	*9,00*	*N*	224205★➡	32
2.165	2.178	.354			
55,75	*56,00*	*6,00*	*S*	*42X56X6★	32
2.195	2.205	.236			
55,75	*56,00*	*10,00*	*S*	*42X56X10★	32
2.195	2.205	.394			
56,00	*56,10*	*14,00*	*N*	710221★	#
2.205	2.209	.551			
56,00	*56,13*	*7,00*	*S*	42X56X7★	32
2.205	2.210	.276			
56,00	*56,13*	*7,00*	*H*	*1944★➡	32
2.205	2.210	.276			
56,00	*56,16*	*7,00*	*N*	473560N★➡	47
2.205	2.211	.276			
56,00	*56,21*	*6,00*	*S*	710097★	#
2.205	2.213	.236			
56,00	*56,20*	*7,00*	*V*	*42X56X7V★	35
2.205	2.213	.276			
56,00	*56,21*	*7,00*	*S*	224220★	49
2.205	2.213	.276			
56,00	*56,20*	*7,00*	*H*	710386★➡	32
2.205	2.213	.276			
56,00	*56,28*	*7,00*	*S*	494117★	49
2.205	2.216	.276			
56,00	*56,34*	*7,00*	*H*	3774★➡	35
2.205	2.218	.276			

For Illustration and Material Data See Technical Section

Designed For A Specific Application - Not Recommended For General Use ➡ Hydrodynamic Lip Design-CW ⬅➡ Hydrodynamic Lip Design-Bidirectional

* The U.S. customer service number is 877-4-TIMKEN. The Canadian customer service numbers are 800-565-4927 (English) and 800-565-0438 (French-Canadian). ★ Metric Seal

42,00mm (1.654") SHAFT (cont.)

Hsg. Bore	Seal O.D.	Seal Width	Lip Mat'l	Part No.	Type/ Illus.
56,30	56,44	8,00	S	710186★	#
2.216	2.222	.315			
56,50	56,70	8,00	S	710244★	#
2.224	2.232	.315			
57,75	58,00	8,00	S	⋆42X58X8★	32
2.273	2.283	.315			
57,75	58,00	10,00	S	⋆42X58X10★	32
2.273	2.283	.394			
58,00	58,10	7,00	S	42X58X7★	48
2.283	2.287	.276			
58,00	58,10	10,00	S	⋆2000★	33
2.283	2.287	.394			
58,00	58,17	7,00	V	474241V★➡	47
2.283	2.290	.276			
58,00	58,18	7,00	S	224235★	48
2.283	2.291	.276			
58,00	58,20	12,00	S	710517★	#
2.283	2.291	.472			
58,00	58,28	8,00	N	224215★⬅	32
2.283	2.294	.315			
59,00	59,10	7,00	N	710442★➡	48
2.323	2.327	.276			
59,75	60,00	8,00	S	⋆42X60X8★	32
2.352	2.362	.315			
59,75	60,00	9,00	S	⋆42X60X9★	32
2.352	2.362	.354			
59,75	60,00	10,00	S	⋆42X60X10★	32
2.352	2.362	.394			
59,75	60,00	12,00	S	⋆42X60X12★	32
2.352	2.362	.472			
60,00	60,20	10,00	V	⋆42X60X10V★	35
2.362	2.370	.394			
60,00	60,22	7,00	S	42X60X7★	32
2.362	2.371	.276			
60,00	60,22	7,00	V	⋆320563★	32
2.362	2.371	.276			
60,00	60,22	7,00	S	⋆323715★	32
2.362	2.371	.276			
60,00	60,22	7,04	N	1953★	32
2.362	2.371	.277			
60,00	60,42	7,00	V	2025★	32
2.362	2.379	.276			
61,75	62,00	7,00	S	⋆42X62X7★	32
2.431	2.441	.276			
61,75	62,00	10,00	S	⋆42X62X10★	32
2.431	2.441	.394			
61,75	62,00	12,00	S	⋆42X62X12★	32
2.431	2.441	.472			
62,00	62,10	12,00	S	710403★	#
2.441	2.445	.472			
62,00	62,20	7,00	S	710301★	97
2.441	2.449	.276			
62,00	62,20	8,00	V	⋆42X62X8V★	32
2.441	2.449	.315			
62,00	62,20	8,00	N	710408★	32
2.441	2.449	.315			
62,00	62,27	8,00	S	224250★	35
2.441	2.452	.315			
62,00	62,27	8,00	S	42X62X8★	35
2.441	2.452	.315			
62,00	62,27	10,00	S	⋆1946★	35
2.441	2.452	.394			
62,00	62,27	10,00	S	224252★	32
2.441	2.452	.394			
62,75	63,00	7,00	S	⋆42X63X7★	32
2.470	2.480	.276			
63,00	63,20	9,00	N	710298★➡	40
2.480	2.488	.354			
63,75	64,00	8,00	S	⋆42X64X8★	32
2.510	2.520	.315			
64,00	64,18	6,00	S	224254★	34
2.520	2.527	.236			

42,00mm (1.654") SHAFT (cont.)

Hsg. Bore	Seal O.D.	Seal Width	Lip Mat'l	Part No.	Type/ Illus.
64,75	65,00	7,50	S	⋆42X65X7.5★	32
2.549	2.559	.295			
64,75	65,00	9,00	S	⋆42X65X9★	32
2.549	2.559	.354			
64,75	65,00	12,00	S	⋆42X65X12★	32
2.549	2.559	.472			
64,80	65,00	13,50	S	710179★➡	32
2.551	2.555	.531			
65,00	65,15	10,00	N	42X65X10★	47
2.559	2.565	.394			
65,00	65,15	10,00	N	224255★	47
2.559	2.565	.394			
65,00	65,20	10,00	V	⋆42X65X10V★	35
2.559	2.567	.394			
65,05	65,15	9,50	N	⋆474135N★	47
2.561	2.565	.374			
66,00	66,28	10,00	S	224266★	32
2.598	2.609	.394			
67,00	67,13	7,16	V	4615V★➡	83
2.638	2.643	.282			
67,00	67,20	10,00	N	710286★⬅➡	32
2.638	2.646	.394			
68,00	68,20	8,00	S	42X68X8★	32
2.677	2.685	.315			
68,00	68,20	10,00	S	42X68X10★	32
2.677	2.685	.394			
69,75	70,00	8,00	S	⋆42X70X8★	32
2.746	2.756	.315			
69,75	70,00	12,00	S	⋆42X70X12★	32
2.746	2.756	.472			
70,00	70,20	10,00	S	42X70X10★	32
2.756	2.764	.394			
72,00	**72,20**	**8,00**	**S**	**42X72X8★**	**32**
2.835	**2.843**	**.315**			
72,00	72,20	10,00	V	⋆42X72X10V★	35
2.835	2.843	.394			
72,00	72,27	10,00	S	42X72X10★	32
2.835	2.845	.394			
72,00	72,27	10,00	S	224270★	32
2.835	2.845	.394			
72,00	72,28	10,00	S	710207★	40
2.835	2.846	.394			
74,75	75,00	10,00	S	⋆42X75X10★	32
2.943	2.953	.394			
74,75	75,00	12,00	S	⋆42X75X12★	32
2.943	2.953	.472			
75,00	75,20	8,00	S	⋆42X75X8★	32
2.953	2.961	.315			
75,75	76,00	12,00	S	⋆42X76X12★	32
2.982	2.992	.472			
76,00	76,10	14,00	N	710245★➡	#
2.992	2.996	.551			
76,00	76,28	12,00	S	710195★	40
2.992	3.003	.472			
77,72	78,00	10,00	S	⋆42X78X10★	32
3.060	3.071	.394			
78,00	78,20	8,00	S	⋆42X78X8★	32
3.071	3.079	.315			
80,00	80,20	8,00	S	42X80X8★	32
3.150	3.157	.315			
80,00	80,20	10,00	S	42X80X10★	35
3.150	3.157	.394			
90,00	90,09	9,00	N	710133★	#
3.543	3.547	.354			
90,00	90,28	12,00	N	710246★	#
3.543	3.554	.472			

1.656" (1-21/32") SHAFT

–	–	–	S	800400	VRS1
–	–	–	V	800404	VRS1
2.502	2.506	.500	S	450260	45

For Illustration and Material Data See Technical Section
Designed For A Specific Application - Not Recommended For General Use ➡ Hydrodynamic Lip Design-CW ⬅ Hydrodynamic Lip Design-CCW
⬅➡ Hydrodynamic Lip Design-Bidirectional
⋆ The U.S. customer service number is 877-4-TIMKEN. The Canadian customer service numbers are 800-565-4927 (English) and 800-565-0438 (French-Canadian). ★ Metric Seal

1.656" (1-21/32") SHAFT (cont.)

Hsg. Bore	Seal O.D.	Seal Width	Lip Mat'l	Part No.	Type/ Illus.
2.623	2.627	.455	N	7457N	1S
2.623	2.627	.455	N	*9541N	#
2.686	2.690	.500	S	450073	45
2.686	2.690	.500	S	*480073	48
2.750	2.754	.500	S	*450284	45
2.875	2.879	.468	S	*450079	45
2.937	**2.941**	**.375**	**S**	**472660**	**47**

1.670" SHAFT

Hsg. Bore	Seal O.D.	Seal Width	Lip Mat'l	Part No.	Type/ Illus.
–	–	–	S	800400	VRS1
–	–	–	V	800404	VRS1
2.686	2.690	.500	S	452086	45

1.673" SHAFT

Hsg. Bore	Seal O.D.	Seal Width	Lip Mat'l	Part No.	Type/ Illus.
–	–	–	S	800400	VRS1
–	–	–	V	800404	VRS1
2.162	2.166	.285	S	4099&	287

1.675" SHAFT

Hsg. Bore	Seal O.D.	Seal Width	Lip Mat'l	Part No.	Type/ Illus.
–	–	–	S	800400	VRS1
–	–	–	V	800404	VRS1
2.000	2.175	.200	S	710385	#

1.680" SHAFT

Hsg. Bore	Seal O.D.	Seal Width	Lip Mat'l	Part No.	Type/ Illus.
2.500	2.506	1.535	S	2465	79

1.685" SHAFT

Hsg. Bore	Seal O.D.	Seal Width	Lip Mat'l	Part No.	Type/ Illus.
–	–	–	S	800400	VRS1
–	–	–	V	800404	VRS1
–	**–**	**.313**		***99167**	**Redi-Sleeve**
–	**–**	**.563**		**99168**	**Redi-Sleeve**
2.500	2.506	.421	V	4981V	#
2.500	2.506	1.250	N	7300S⬅	79

1.687" (1-11/16") SHAFT

Hsg. Bore	Seal O.D.	Seal Width	Lip Mat'l	Part No.	Type/ Illus.
–	–	–	S	800400	VRS1
–	–	–	V	800404	VRS1
–	**–**	**.313**		***99167**	**Redi-Sleeve**
–	**–**	**.563**		**99168**	**Redi-Sleeve**
2.279	2.283	.500	L	*6084	5L
2.279	2.285	.250	S	353141	35
2.327	2.332	.500	S	203008	203
2.327	2.332	.500	S	204008	204
2.328	**2.332**	**.312**	**S**	**473317**	**47**
2.328	2.332	.312	N	*473317N	47
2.328	2.332	.437	S	*471410	47
2.328	2.332	.437	S	*481410	48
2.328	2.332	.531	S	7022S	276
2.363	2.367	.437	S	*481345	48
2.363	2.367	.437	H	*481345H	48
2.363	2.367	.437	N	*481345N	48
2.374	**2.378**	**.312**	**S**	**473233**	**47**
2.374	2.378	.375	S	*471812	47
2.374	2.378	.375	S	*481812	48
2.374	2.378	.500	S	*410562	41
2.437	**2.441**	**.312**	**S**	**473445**	**47**
2.437	2.441	.312	V	*473445V	47
2.437	2.441	.468	S	*410479	41
2.437	2.441	.468	S	*450479	45
2.437	2.441	.468	S	*470479	47
2.437	2.441	.468	S	*480479	48
2.437	2.441	.468	H	480479H	48
2.437	2.441	.468	V	*480479V	48
2.500	2.506	1.535	N	*2854⬅	79
2.502	2.506	.250	S	40154S	4S

1.687" (1-11/16") SHAFT (cont.)

Hsg. Bore	Seal O.D.	Seal Width	Lip Mat'l	Part No.	Type/ Illus.
2.502	**2.506**	**.312**	**S**	**473234**	**47**
2.502	2.506	.375	S	*450363	45
2.502	2.506	.375	H	*450363H	45
2.502	2.506	.375	S	*480363	48
2.502	2.506	.500	S	*410154	41
2.502	2.506	.500	N	*410154N	41
2.502	2.506	.500	S	450154	45
2.502	2.506	.500	S	*470154	47
2.502	2.506	.500	H	*470154H	47
2.502	2.506	.500	S	*480154	48
2.502	2.506	.582	S	7038SA⬅	41
2.560	2.579	.375	S	2146	#
2.560	2.579	.375	S	*5114	#
2.560	2.579	.470	S	712146⬅➡	25
2.561	2.565	.500	S	*410460	41
2.561	**2.565**	**.500**	**S**	**470460**	**47**
2.561	2.566	.500	S	*203041	203
2.605	2.609	.235	S	9178S	4S
2.623	**2.627**	**.312**	**S**	**473235**	**47**
2.623	2.627	.375	S	440265	44
2.623	2.627	.437	N	8516N	47
2.623	2.627	.500	S	*410265	41
2.623	2.627	.500	N	*410265N	41
2.623	2.627	.500	S	*450265	45
2.623	2.627	.500	S	*470265	47
2.623	2.627	.500	H	*470265H	47
2.623	2.627	.500	S	*480265	48
2.624	2.628	.609	V	*8547	#
2.624	2.628	.609	H	*8547H	#
2.650	2.725	.290	S	200886%	200E
2.684	2.706	.250	S	7381S	24
2.686	2.690	.500	S	*410074	41
2.686	2.690	.500	S	*450074	45
2.686	2.690	.500	S	470074	47
2.686	2.690	.500	S	*480074	48
2.686	**2.691**	**.312**	**S**	**474265**	**47**
2.714	2.718	.468	S	*410421	41
2.716	2.720	.468	S	*410765	41
2.716	**2.720**	**.468**	**S**	**450765**	**45**
2.750	**2.754**	**.312**	**S**	**473236**	**47**
2.750	2.754	.500	S	*410186	41
2.750	2.754	.500	S	*450186	45
2.750	2.754	.500	S	*470186	47
2.750	2.754	.500	S	*480186	48
2.835	2.839	.468	S	*410596	41
2.835	2.839	.468	S	*450596	45
2.835	**2.839**	**.468**	**S**	**470596**	**47**
2.835	2.839	.468	V	470596V	47
2.835	2.839	.468	S	*480596	48
2.875	**2.879**	**.375**	**S**	**473446**	**47**
2.875	2.879	.468	S	*410080	41
2.875	2.879	.468	S	*450080	45
2.875	2.879	.468	S	*470080	47
2.875	2.879	.468	S	*480080	48
2.875	2.879	.500	S	*452629	45
2.875	2.879	.500	S	*482629	48
2.875	2.885	.622	S	*4020	#
2.875	2.885	.625	S	*712143	32
3.000	**3.005**	**.375**	**S**	**471981**	**47**
3.000	3.005	.500	S	*451226	45
3.062	3.066	.500	S	*410086	41
3.062	3.066	.500	S	*450086	45
3.062	3.066	.500	S	470086	47
3.062	3.066	.500	S	*480086	48
3.125	3.130	.375	S	*481982	48
3.125	3.130	.500	S	*450687	45
3.125	**3.130**	**.500**	**S**	**470687**	**47**
3.125	3.130	.500	N	*470687N	47
3.125	3.130	.500	S	*480687	48
3.189	3.194	.437	S	450533	45
.000	2.551	.595	S	710502	#

For Illustration and Material Data See Technical Section
Designed For A Specific Application - Not Recommended For General Use ⬅ Hydrodynamic Lip Design-CCW ⬅➡ Hydrodynamic Lip Design-Bidirectional % External Bore
& Flanged O.D. * The U.S. customer service number is 877-4-TIMKEN. The Canadian customer service numbers are 800-565-4927 (English) and 800-565-0438 (French-Canadian).

Hsg. Bore	Seal O.D.	Seal Width	Lip Mat'l	Part No.	Type/ Illus.
42,90mm (1.689") SHAFT					
61,75	*62,00*	*8,00*	*S*	*42.9X62X8★	32
2.431	2.441	.315			
43,00mm (1.693") SHAFT					
–	–	–	S	800400	VRS1
–	–	–	V	800404	VRS1
49,80	*50,00*	*7,00*	*S*	*43X50X7★	32
1.961	1.969	.276			
54,00	*54,10*	*6,50*	*S*	224400★	25
2.126	2.130	.256			
54,00	*54,10*	*7,50*	*S*	334111★	33
2.126	2.130	.295			
54,75	*55,00*	*9,00*	*S*	*43X55X9★	32
2.155	2.165	.354			
55,00	*55,20*	*6,00*	*V*	2012★➡	32
2.165	2.173	.236			
55,00	*55,20*	*6,00*	*V*	2012V★➡	32
2.165	2.173	.236			
55,00	*55,20*	*8,00*	*H*	710264★➡	32
2.165	2.173	.236			
55,00	*55,20*	*8,00*	*S*	43X55X8★	32
2.165	2.173	.315			
55,00	*55,25*	*8,00*	*S*	1183★	34
2.165	2.175	.315			
57,00	*57,20*	*8,00*	*S*	*43X57X8★	32
2.244	2.252	.315			
57,75	*58,00*	*8,00*	*S*	*43X58X8★	32
2.273	2.283	.315			
58,47	*58,62*	*7,50*	*S*	710159★	#
2.302	2.308	.295			
60,00	*60,30*	*8,00*	*S*	320583★➡	32
2.362	2.374	.315			
61,75	*62,00*	*8,00*	*S*	*43X62X8★	32
2.431	2.441	.315			
61,75	*62,00*	*12,00*	*S*	*43X62X12★	32
2.431	2.441	.472			
62,00	*62,10*	*9,50*	*S*	224320★	47
2.441	2.445	.374			
62,00	*62,10*	*9,50*	*S*	*474137★	47
2.441	2.445	.374			
2.480	2.488	.394	S	710431	#
65,00	*65,20*	*8,00*	*S*	43X65X8★	32
2.559	2.567	.315			
65,04	*65,14*	*9,50*	*S*	710387★	47
2.561	2.565	.374			
65,75	*66,00*	*10,00*	*S*	*43X66X10★	32
2.588	2.598	.394			
69,00	*69,20*	*8,00*	*S*	*43X69X8★	32
2.717	2.724	.315			
70,00	*70,20*	*9,00*	*S*	710142★	#
2.756	2.764	.354			
73,00	*73,20*	*8,00*	*S*	*43X73X8★	32
2.874	2.882	.315			
1.694" SHAFT					
.000	2.462	.433	V	710513	#
1.703" SHAFT					
–	–	–	S	800450	VRS1
–	–	–	S	800451	VRS2
–	–	–	V	800454	VRS1
–	–	–	V	800455	VRS2
3.030	3.039	.500	S	710067⬅➡	69
3.084	3.090	.500	S	3747⬅➡	69
1.705" SHAFT					
–	–	–	S	800450	VRS1
–	–	–	S	800451	VRS2
–	–	–	V	800454	VRS1
1.705" SHAFT (cont.)					
–	–	–	V	800455	VRS2
3.034	3.039	.562	V	100357	86
3.080	3.084	.461	S	710105⬅➡	#
1.709" SHAFT					
–	–	–	S	800450	VRS1
–	–	–	S	800451	VRS2
–	–	–	V	800454	VRS1
–	–	–	V	800455	VRS2
2.205	2.213	.292	N	2955➡	71
43,50mm (1.713") SHAFT					
61,75	*62,00*	*6,50*	*S*	*43.5X62X6.5★	32
2.431	2.441	.256			
1.718" (1-23/32") SHAFT					
–	–	–	S	800450	VRS1
–	–	–	S	800451	VRS2
–	–	–	V	800454	VRS1
–	–	–	V	800455	VRS2
–	**–**	**.563**		**99171**	**Redi-Sleeve**
2.228	2.185	.056	S	*9087	#
2.437	2.441	.468	L	50327	5L
2.561	2.565	.500	V	442251V	44
2.561	2.565	.500	S	442251	44
2.561	2.565	.500	S	473336	47
2.562	2.566	.500	F	*205051	205
2.623	**2.627**	**.500**	**S**	**450068**	**45**
2.875	2.879	.468	L	50081	5L
2.996	3.000	.375	F	6101	29
1.730" SHAFT					
–	–	–	S	800450	VRS1
–	–	–	S	800451	VRS2
–	–	–	V	800454	VRS1
–	–	–	V	800455	VRS2
2.336	2.340	.250	S	6840S	4S
2.336	2.340	.280	F	7607	#
2.336	2.340	.470	N	8121S	25
2.758	2.762	.882	S	*7729	39
2.834	2.838	.375	S	*483602	48
2.834	2.838	.468	S	*483326	48
2.875	2.879	.468	S	*473559	47
44,00mm (1.732") SHAFT					
–	–	–	S	800450	VRS1
–	–	–	S	800451	VRS2
–	–	–	V	800454	VRS1
–	–	–	V	800455	VRS2
53,75	*54,00*	*7,00*	*S*	*44X54X7★	32
2.116	2.126	.276			
58,00	*58,20*	*8,00*	*S*	*44X58X8★	32
2.283	2.291	.315			
59,00	*59,23*	*6,80*	*N*	224450★➡	35
2.323	2.332	.268			
59,75	*60,00*	*9,00*	*S*	*44X60X9★	32
2.352	2.362	.354			
60,00	*60,20*	*7,00*	*S*	44X60X7★	32
2.362	2.370	.276			
60,00	*60,20*	*10,00*	*S*	44X60X10★	35
2.362	2.370	.394			
60,00	*60,28*	*10,00*	*H*	224460★➡	32
2.362	2.373	.394			
61,75	*62,00*	*7,00*	*S*	*44X62X7★	32
2.431	2.441	.276			
61,75	*62,00*	*10,00*	*S*	*44X62X10★	32
2.431	2.441	.394			

For Illustration and Material Data See Technical Section

Designed For A Specific Application - Not Recommended For General Use ➡ Hydrodynamic Lip Design-CW ⬅➡ Hydrodynamic Lip Design-Bidirectional

* The U.S. customer service number is 877-4-TIMKEN. The Canadian customer service numbers are 800-565-4927 (English) and 800-565-0438 (French-Canadian). ★ Metric Seal

44,00mm (1.732") SHAFT (cont.)

Hsg. Bore	Seal O.D.	Seal Width	Lip Mat'l	Part No.	Type/ Illus.
62,00	*62,26*	*8,00*	*S*	44X62X8★⬅➡	32
2.441	2.451	.315			
62,00	*62,26*	*8,00*	*S*	224462★⬅➡	32
2.441	2.451	.315			
62,00	*62,28*	*10,00*	*N*	224464★⬅	32
2.441	2.452	.394			
64,75	*65,00*	*11,00*	*S*	*44X65X11★	32
2.549	2.559	.433			
65,00	*65,20*	*11,00*	*S*	224465★➡	32
2.559	2.567	.433			
65,00	*65,28*	*10,00*	*S*	44X65X10★	35
2.559	2.570	.394			
66,00	*66,10*	*6,00*	*S*	710223★	#
2.598	2.602	.236			
68,00	*68,30*	*8,00*	*N*	350609★⬅	35
2.677	2.689	.315			
69,75	*70,00*	*12,00*	*S*	*44X70X12★	32
2.746	2.756	.472			
70,00	*70,20*	*8,00*	*S*	44X70X8★	32
2.756	2.764	.315			
72,00	*72,11*	*10,00*	*S*	44X72X10★	32
2.835	2.839	.394			
72,00	*72,11*	*10,00*	*S*	224470★	35
2.835	2.839	.394			
74,00	*74,20*	*11,00*	*S*	710525★	#
2.913	2.921	.433			
80,00	*80,12*	*8,00*	*S*	710115★⬅➡	98
3.150	3.154	.315			
90,00	*90,10*	*9,00*	*N*	710283★	#
3.543	3.547	.354			
92,00	*92,28*	*12,50*	*S*	710208★	#
3.622	3.633	.492			

1.734" SHAFT

Hsg. Bore	Seal O.D.	Seal Width	Lip Mat'l	Part No.	Type/ Illus.
–	–	–	S	800450	VRS1
–	–	–	S	800451	VRS2
–	–	–	V	800454	VRS1
–	–	–	V	800455	VRS2
2.400	2.405	.230	S	8705S	277
2.726	2.730	.500	L	5836	201
2.835	2.839	.312	S	*484103	48

1.739" SHAFT

Hsg. Bore	Seal O.D.	Seal Width	Lip Mat'l	Part No.	Type/ Illus.
–	–	–	S	800450	VRS1
–	–	–	S	800451	VRS2
–	–	–	V	800454	VRS1
–	–	–	V	800455	VRS2
–	**–**	**.375**		**99170**	**Redi-Sleeve**
2.812	2.816	.594	S	*9844&	#
2.812	3.270	.593	N	8460N&	74
3.000	3.008	.500	S	6818	71

1.748" SHAFT

Hsg. Bore	Seal O.D.	Seal Width	Lip Mat'l	Part No.	Type/ Illus.
–	–	–	S	800450	VRS1
–	–	–	S	800451	VRS2
–	–	–	V	800454	VRS1
–	–	–	V	800455	VRS2
–	**–**	**.375**		**99172**	**Redi-Sleeve**
–	**–**	**.531**		***99180**	**Redi-Sleeve**
–	**–**	**.563**		**99174**	**Redi-Sleeve**
–	**–**	**.750**		**99175**	**Redi-Sleeve**
2.619	2.627	.330	N	4950	88
2.623	2.627	.330	N	3227➡	83
3.229	3.238	.335	H	3583➡	83

1.750" (1-3/4") SHAFT

Hsg. Bore	Seal O.D.	Seal Width	Lip Mat'l	Part No.	Type/ Illus.
–	–	–	S	800450	VRS1
–	–	–	S	800451	VRS2
–	–	–	V	800454	VRS1
–	–	–	V	800455	VRS2
–	**–**	**.375**		**99172**	**Redi-Sleeve**
–	**–**	**.531**		***99180**	**Redi-Sleeve**
–	**–**	**.563**		**99174**	**Redi-Sleeve**
–	**–**	**.750**		**99175**	**Redi-Sleeve**
2.250	–	.250	U	710024	#
2.250	2.254	.250	S	42352S	4S
2.250	**2.254**	**.359**	**S**	**450400**	**45**
2.250	2.254	.359	V	*450400V	45
2.250	2.258	.187	S	6703S	35
2.250	2.258	.250	S	340400	34
2.250	2.258	.250	H	*340400H	34
2.328	2.332	.437	S	482126	48
2.374	2.378	.250	S	*41206S	4S
2.374	**2.378**	**.312**	**S**	**473237**	**47**
2.374	**2.378**	**.312**	**V**	**473237V**	**47**
2.374	2.378	.312	S	*483237	48
2.374	2.378	.375	S	*471288	47
2.374	2.378	.375	N	*471288N	47
2.374	2.378	.375	S	*481288	48
2.374	2.378	.437	S	*472246	47
2.374	2.378	.437	S	*482246	48
2.374	2.378	.484	S	710062	#
2.374	2.378	.500	S	*410929	41
2.374	2.378	.500	S	*450929	45
2.374	2.378	.500	S	*470929	47
2.374	2.378	.500	S	*480929	48
2.374	2.379	.250	S	204503	204
2.374	2.381	.437	S	7486S	35
2.411	2.415	.380	N	*451169N	45
2.411	2.415	.380	S	471169	47
2.411	2.415	.380	N	471169N	47
2.412	2.416	.468	S	*481243	48
2.436	2.441	.300	S	*4771S⬅➡	#
2.437	2.441	.250	S	43071S	4S
2.437	**2.441**	**.312**	**S**	**471504**	**47**
2.437	2.441	.312	V	471504V	47
2.437	2.441	.312	S	*481504	48
2.437	2.441	.312	H	*481504H	48
2.437	2.441	.375	S	*471122	47
2.437	2.441	.375	S	*481122	48
2.437	2.441	.375	U	710013	#
2.437	2.441	.468	S	*450351	45
2.437	2.441	.468	N	*450351N	45
2.437	2.441	.468	S	470351	47
2.437	2.441	.468	S	*480351	48
2.437	2.441	.468	H	*480351H	48
2.437	2.441	.500	S	*452418	45
2.440	2.445	.468	S	*203007	203
2.440	2.445	.468	S	*204007	204
2.441	**2.445**	**.375**	**S**	**471831**	**47**
2.441	2.445	.375	H	*471831H	47
2.441	2.445	.375	N	*471831N	47
2.441	2.445	.375	V	*471831V	47
2.449	**2.453**	**.312**	**S**	**473157**	**47**
2.497	2.501	.500	S	*483565	48
2.500	2.504	.375	S	*483503	48
2.500	2.504	.484	S	710389	7S
2.500	2.508	.375	T	354040	35
2.502	2.506	.250	S	40494S	4S
2.502	2.506	.250	S	*50352	5S
2.502	2.506	.312	N	*452164N	45
2.502	**2.506**	**.312**	**S**	**472164**	**47**
2.502	2.506	.312	A	472164A	47
2.502	**2.506**	**.312**	**V**	**472164V**	**47**
2.502	2.506	.312	S	*482164	48
2.502	2.506	.312	N	482164N	48

For Illustration and Material Data See Technical Section
Designed For A Specific Application - Not Recommended For General Use ➡ Hydrodynamic Lip Design-CW ⬅ Hydrodynamic Lip Design-CCW
⬅➡ Hydrodynamic Lip Design-Bidirectional & Flanged O.D.
* The U.S. customer service number is 877-4-TIMKEN. The Canadian customer service numbers are 800-565-4927 (English) and 800-565-0438 (French-Canadian). ★ Metric Seal

1.750" (1-3/4") SHAFT (cont.)

Hsg. Bore	Seal O.D.	Seal Width	Lip Mat'l	Part No.	Type/ Illus.
2.502	2.506	.375	S	450494	45
2.502	2.506	.375	S	*470494	47
2.502	2.506	.375	N	*470494N	47
2.502	2.506	.375	S	*480494	48
2.502	2.506	.375	N	*480494N	48
2.502	2.506	.406	H	451147H	45
2.502	2.506	.406	N	*451147N	45
2.502	2.506	.500	S	*410352	41
2.502	2.506	.500	S	450352	45
2.502	2.506	.500	H	*450352H	45
2.502	2.506	.500	N	*450352N	45
2.502	2.506	.500	S	*470352	47
2.502	2.506	.500	H	*470352H	47
2.502	2.506	.500	S	*480352	48
2.502	2.506	.680	L	7834	#
2.502	2.506	.750	S	*7731	2S
2.561	2.565	.250	S	204502	204
2.561	2.565	.500	V	470361V	47
2.561	2.565	.500	S	*410361	41
2.561	2.565	.500	S	450361	45
2.561	2.565	.500	S	470361	47
2.561	2.565	.500	S	*480361	48
2.561	**2.566**	**.312**	**S**	**472193**	**47**
2.561	2.566	.500	S	*204015	204
2.562	2.566	.500	S	203015	203
2.562	2.566	.500	F	205015	205
2.565	**2.570**	**.312**	**S**	**473796**	**47**
2.566	2.574	.311	S	324941	32
2.621	2.625	.937	V	710428	87
2.623	2.627	.250	S	*43092S	4S
2.623	2.627	.290	S	200335	200
2.623	2.627	.312	V	472185V	47
2.623	**2.627**	**.312**	**S**	**472185**	**47**
2.623	2.627	.312	S	*482185	48
2.623	2.627	.375	S	*481019	48
2.623	2.627	.500	S	*50070	5S
2.623	2.627	.500	F	*290070	29
2.623	2.627	.500	S	*410070	41
2.623	2.627	.500	N	*410070N	41
2.623	2.627	.500	S	450070	45
2.623	2.627	.500	H	*450070H	45
2.623	2.627	.500	N	*450070N	45
2.623	2.627	.500	V	*450070V	45
2.623	2.627	.500	S	*470070	47
2.623	2.627	.500	S	*480070	48
2.623	2.627	.500	N	*480070N	48
2.624	2.628	.250	S	*443389	44
2.630	2.930	.290	S	200912%	200E
2.686	**2.690**	**.375**	**S**	**470334**	**47**
2.686	2.690	.437	S	*451879	45
2.686	2.690	.500	S	*410076	41
2.686	2.690	.500	S	450076	45
2.686	2.690	.500	N	*450076N	45
2.686	2.690	.500	V	*450076V	45
2.686	2.690	.500	S	*470076	47
2.686	2.690	.500	S	*480076	48
2.686	2.690	.500	N	*480076N	48
2.715	2.721	.437	S	323119	32
2.716	2.721	.359	S	204038	204
2.716	2.721	.406	S	204002	204
2.717	2.721	.406	S	203002	203
2.717	2.721	.468	S	*411030	41
2.717	2.721	.468	S	*451030	45
2.718	2.722	.359	S	200354	200
2.718	2.728	.294	S	200854%	200E
2.750	2.754	.250	S	*40183S	4S
2.750	2.754	.312	V	472179V	47
2.750	**2.754**	**.312**	**S**	**472179**	**47**
2.750	2.754	.312	A	472179A	47
2.750	2.754	.312	S	*482179	48
2.750	2.754	.484	L	5827	201
2.750	2.754	.500	S	*50183	5S

1.750" (1-3/4") SHAFT (cont.)

Hsg. Bore	Seal O.D.	Seal Width	Lip Mat'l	Part No.	Type/ Illus.
2.750	2.754	.500	S	*410183	41
2.750	2.754	.500	N	410183N	41
2.750	2.754	.500	S	450183	45
2.750	2.754	.500	N	*450183N	45
2.750	2.754	.500	V	*450183V	45
2.750	2.754	.500	S	*470183	47
2.750	2.754	.500	N	*470183N	47
2.750	2.754	.500	S	*480183	48
2.750	2.754	.500	H	*480183H	48
2.758	**2.762**	**.375**	**S**	**473447**	**47**
2.758	2.762	.500	S	*410155	41
2.758	2.762	.500	S	*450155	45
2.758	2.762	.500	S	*470155	47
2.758	2.762	.500	S	*480155	48
2.783	2.787	.531	L	50289	5L
2.786	2.876	.285	S	200600%	200E
2.810	2.814	.315	S	712260	47
2.875	2.879	.375	V	471141V	47
2.875	**2.879**	**.375**	**S**	**471141**	**47**
2.875	2.879	.468	S	*410291	41
2.875	2.879	.468	N	*410291N	41
2.875	2.879	.468	S	450291	45
2.875	2.879	.468	N	450291N	45
2.875	2.879	.468	V	*450291V	45
2.875	2.879	.468	S	*470291	47
2.875	2.879	.468	S	*480291	48
2.875	2.879	.500	S	*481067	48
2.875	2.880	.500	S	6949S	274
2.983	2.987	.438	S	5711	41
2.996	**3.001**	**.375**	**S**	**473448**	**47**
2.996	3.001	.437	S	*411983	41
2.996	3.001	.500	S	*410359	41
2.996	3.001	.500	S	*450359	45
2.996	3.001	.500	S	*470359	47
2.996	3.001	.500	S	*480359	48
3.000	3.005	.250	S	204501	204
3.000	**3.005**	**.375**	**S**	**471984**	**47**
3.000	3.005	.375	N	*471984N	47
3.000	3.005	.375	S	*481984	48
3.000	3.005	.375	N	*481984N	48
3.000	3.005	.500	S	*410719	41
3.000	3.005	.500	S	*450719	45
3.000	3.005	.500	H	*450719H	45
3.000	3.005	.500	S	*470719	47
3.000	3.005	.500	H	*470719H	47
3.000	3.005	.500	S	*480719	48
3.036	3.040	.500	S	*4302⬅➡	47
3.061	**3.066**	**.375**	**S**	**473313**	**47**
3.061	3.066	.500	S	*410087	41
3.061	3.066	.500	S	450087	45
3.061	3.066	.500	S	*470087	47
3.061	3.066	.500	S	*480087	48
3.062	3.066	.485	S	710005	86
3.125	3.130	.500	S	*451350	45
3.149	3.154	.291	S	*200303	200
3.153	3.159	.312	S	482267	48
3.189	3.193	.400	N	*9158	47
3.189	3.194	.437	S	*410088	41
3.189	3.194	.437	N	*410088N	41
3.189	3.194	.437	S	*450088	45
3.189	**3.194**	**.437**	**S**	**470088**	**47**
3.189	3.194	.437	S	*480088	48
3.371	3.376	.625	S	210945	21
3.543	**3.548**	**.500**	**S**	**455536**	**45**
3.937	3.942	.312	S	476820	47

1.751" SHAFT

Hsg. Bore	Seal O.D.	Seal Width	Lip Mat'l	Part No.	Type/ Illus.
2.533	2.608	.290	S	*200895%	200E

For Illustration and Material Data See Technical Section

Designed For A Specific Application - Not Recommended For General Use ⬅➡ Hydrodynamic Lip Design-Bidirectional % External Bore

* The U.S. customer service number is 877-4-TIMKEN. The Canadian customer service numbers are 800-565-4927 (English) and 800-565-0438 (French-Canadian).

Hsg. Bore	Seal O.D.	Seal Width	Lip Mat'l	Part No.	Type/ Illus.
44,50mm (1.752") SHAFT					
61,75	*62,00*	*10,00*	*S*	*44.5X62X10★	32
2.431	2.441	.394			
1.763" SHAFT					
–	–	–	S	800450	VRS1
–	–	–	S	800451	VRS2
–	–	–	V	800454	VRS1
–	–	–	V	800455	VRS2
–	**–**	**.563**		**99176**	**Redi-Sleeve**
2.126	2.134	.382	S	1906	31
2.409	2.416	.375	V	9845V	47
2.409	2.416	.375	V	9845➡	47
2.409	2.416	.380	V	*3517V➡	47
2.409	2.416	.380	S	*3517➡	47
2.412	2.416	.375	S	6936S	45
2.412	2.416	.468	S	*410375	41
2.412	2.416	.468	S	*480375	48
1.765" SHAFT					
–	–	–	S	800450	VRS1
–	–	–	S	800451	VRS2
–	–	–	V	800454	VRS1
–	–	–	V	800455	VRS2
–	**–**	**.563**		**99176**	**Redi-Sleeve**
2.412	2.416	.468	S	450375	45
1.771" SHAFT					
–	–	–	S	800450	VRS1
–	–	–	S	800451	VRS2
–	–	–	V	800454	VRS1
–	–	–	V	800455	VRS2
–	**–**	**.551**		**99177**	**Redi-Sleeve**
2.500	2.504	.359	H	*4075	#
2.500	2.504	.359	H	714075	#
2.622	2.628	.500	T	354041	35
3.656	3.656	.282	S	1952	54
45,00mm (1.772") SHAFT					
–	–	–	S	800450	VRS1
–	–	–	S	800451	VRS2
–	–	–	V	800454	VRS1
–	–	–	V	800455	VRS2
–	**–**	**.551**		**99177**	**Redi-Sleeve**
53,75	*54,00*	*4,50*	*S*	*45X54X4.5★	32
2.116	2.126	.177			
54,75	*55,00*	*5,00*	*S*	*45X55X5★	32
2.155	2.165	.197			
54,75	*55,00*	*7,00*	*S*	*45X55X7★	32
2.155	2.165	.276			
54,75	*55,00*	*8,00*	*S*	*45X55X8★	32
2.155	2.165	.315			
54,75	*55,00*	*10,00*	*S*	*45X55X10★	32
2.155	2.165	.394			
55,75	*56,00*	*6,00*	*S*	*45X56X6★	32
2.195	2.205	.236			
55,75	*56,00*	*8,00*	*S*	*45X56X8★	32
2.195	2.205	.315			
56,75	*57,00*	*5,50*	*S*	*45X57X5.5★	32
2.234	2.244	.217			
56,75	*57,00*	*9,00*	*S*	*45X57X9★	32
2.234	2.244	.354			
57,75	*58,00*	*8,00*	*S*	*45X58X8★	32
2.273	2.283	.315			
57,75	*58,00*	*10,00*	*S*	*45X58X10★	32
2.273	2.283	.394			

Hsg. Bore	Seal O.D.	Seal Width	Lip Mat'l	Part No.	Type/ Illus.
45,00mm (1.772") SHAFT (cont.)					
58,00	*58,28*	*7,00*	*S*	45X58X7★	35
2.283	2.294	.276			
58,00	*58,30*	*7,00*	*S*	224510★	32
2.283	2.295	.276			
58,75	*59,00*	*7,00*	*S*	*45X59X7★	32
2.313	2.323	.276			
58,75	*59,00*	*10,00*	*S*	*45X59X10★	32
2.313	2.323	.394			
59,00	*59,28*	*7,50*	*S*	710193★	32
2.323	2.334	.295			
59,75	*60,00*	*9,00*	*S*	*45X60X9★	32
2.352	2.362	.354			
59,75	*60,00*	*12,00*	*S*	*45X60X12★	32
2.352	2.362	.472			
60,00	*60,20*	*7,00*	*S*	45X60X7★	35
2.362	2.370	.276			
60,00	*60,20*	*8,00*	*S*	45X60X8★	35
2.362	2.370	.315			
60,00	*60,20*	*8,00*	*V*	*45X60X8V★	35
2.362	2.370	.315			
60,00	*60,25*	*10,00*	*S*	45X60X10★	32
2.362	2.372	.394			
60,00	*60,25*	*10,00*	*N*	*1184★	35
2.362	2.372	.394			
60,00	*60,25*	*10,00*	*S*	224520★	35
2.362	2.372	.394			
60,00	*60,25*	*10,80*	*N*	2440★➡	69
2.362	2.372	.425			
61,00	*61,16*	*9,00*	*V*	*484236V★	48
2.402	2.408	.354			
61,75	*62,00*	*7,00*	*S*	*45X62X7★	32
2.431	2.441	.276			
61,75	*62,00*	*9,00*	*S*	*45X62X9★	32
2.431	2.441	.354			
61,75	*62,00*	*10,00*	*S*	*45X62X10★	32
2.431	2.441	.394			
61,75	*62,00*	*12,00*	*S*	*45X62X12★	32
2.431	2.441	.472			
61,90	*62,00*	*10,00*	*S*	*323871★	32
2.437	2.441	.394			
62,00	*62,10*	*6,00*	*S*	494122★	49
2.441	2.445	.236			
62,00	*62,10*	*9,00*	*S*	710321★	47
2.441	2.445	.354			
62,00	*62,10*	*10,16*	*S*	*1997★	#
2.441	2.445	.400			
62,00	*62,15*	*8,00*	*V*	710078★	47
2.441	2.447	.315			
62,00	*62,20*	*8,00*	*V*	*45X62X8V★	35
2.441	2.449	.315			
62,00	*62,30*	*8,00*	*S*	45X62X8★	35
2.441	2.453	.315			
62,00	*62,30*	*8,00*	*S*	1012★	35
2.441	2.453	.315			
62,00	*62,30*	*8,00*	*S*	1012N★	35
2.441	2.453	.315			
62,00	*62,30*	*10,00*	*S*	*1185★	32
2.441	2.453	.394			
62,00	*62,30*	*12,00*	*S*	*2013★	32
2.441	2.453	.472			
62,75	*63,00*	*7,00*	*S*	*45X63X7★	32
2.470	2.480	.276			
63,25	*63,50*	*10,00*	*S*	*45X63.5X10★	32
2.490	2.500	.394			
63,75	*64,00*	*7,00*	*S*	*45X64X7★	32
2.510	2.520	.276			
63,75	*64,00*	*10,00*	*S*	*45X64X10★	32
2.510	2.520	.394			
64,00	*64,11*	*11,86*	*S*	1951★&	87
2.520	2.524	.467			
64,00	*64,11*	*16,40*	*S*	*3966★	#
2.520	2.524	.646			

For Illustration and Material Data See Technical Section
Designed For A Specific Application - Not Recommended For General Use ➡ Hydrodynamic Lip Design-CW & Flanged O.D.
* The U.S. customer service number is 877-4-TIMKEN. The Canadian customer service numbers are 800-565-4927 (English) and 800-565-0438 (French-Canadian). ★ Metric Seal

45,00mm (1.772") SHAFT (cont.)

Hsg. Bore	Seal O.D.	Seal Width	Lip Mat'l	Part No.	Type/ Illus.
64,00	64,27	12,00	S	239155★	#
2.520	2.530	.472			
64,00	64,26	13,00	S	1939★	#
2.520	2.530	.512			
64,00	64,25	19,00	S	1938★	#
2.520	2.530	.748			
64,75	65,00	7,00	S	*45X65X7★	32
2.549	2.559	.276			
64,75	65,00	9,00	S	*45X65X9★	32
2.549	2.559	.354			
64,75	65,00	10,00	S	*45X65X10★	32
2.549	2.559	.394			
64,75	65,00	12,00	S	*45X65X12★	32
2.549	2.559	.472			
65,00	65,10	5,00	S	1992★	47
2.559	2.563	.197			
65,00	65,10	5,00	S	*3985★	#
2.559	2.563	.197			
65,00	65,20	8,00	V	*45X65X8V★	35
2.559	2.567	.315			
65,00	65,28	8,00	S	45X65X8★	32
2.559	2.570	.315			
65,00	65,28	8,00	S	224550★	35
2.559	2.570	.315			
65,75	66,00	10,00	S	*45X66X10★	32
2.588	2.598	.394			
66,00	66,24	7,50	S	710160★	#
2.598	2.608	.295			
67,00	67,20	8,00	S	710289★➡	32
2.638	2.646	.315			
67,75	68,00	8,00	S	*45X68X8★	32
2.667	2.677	.315			
67,75	68,00	9,00	S	*45X68X9★	32
2.667	2.677	.354			
67,75	68,00	10,00	S	*45X68X10★	32
2.667	2.677	.394			
67,75	68,00	12,00	S	*45X68X12★	32
2.667	2.677	.472			
68,00	68,20	10,00	V	*45X68X10V★	35
2.677	2.685	.394			
68,00	68,20	12,00	S	710345★➡	32
2.677	2.685	.472			
68,00	68,28	7,00	S	45X68X7★	32
2.677	2.688	.276			
68,00	68,28	7,00	S	224560★	32
2.677	2.688	.276			
68,00	68,28	7,00	V	320564★	32
2.677	2.688	.276			
68,05	68,30	7,00	S	*45X68.3X7★	32
2.679	2.689	.276			
69,75	70,00	12,00	S	*45X70X12★	32
2.746	2.756	.472			
70,00	70,18	10,00	S	45X70X10★	32
2.756	2.763	.394			
71,75	72,00	8,00	S	*45X72X8★	32
2.825	2.835	.315			
72,00	72,20	8,00	V	*45X72X8V★	32
2.835	2.843	.315			
72,00	72,20	10,00	S	45X72X10★	35
2.835	2.843	.394			
72,00	72,20	12,00	N	710270★	32
2.835	2.843	.472			
72,00	72,25	10,00	S	45X72X95★	32
2.835	2.844	.394			
72,00	72,28	7,00	S	45X72X7★	35
2.835	2.846	.276			
72,00	72,28	12,00	S	45X72X12★	35
2.835	2.846	.472			
72,00	72,28	12,00	S	224570★	35
2.835	2.846	.472			
72,20	72,34	7,50	S	1943★	44
2.843	2.848	.295			

45,00mm (1.772") SHAFT (cont.)

Hsg. Bore	Seal O.D.	Seal Width	Lip Mat'l	Part No.	Type/ Illus.
72,20	72,34	7,50	S	*444118★	44
2.843	2.848	.295			
74,25	74,50	12,00	S	*45X74.5X12★	32
2.923	2.933	.472			
74,75	75,00	8,00	S	*45X75X8★	32
2.943	2.953	.315			
74,75	75,00	10,00	S	*45X75X10★	32
2.943	2.953	.394			
74,75	75,00	12,00	S	*45X75X12★	32
2.943	2.953	.472			
75,00	75,10	12,00	N	1979★➡	47
2.953	2.957	.472			
75,00	75,20	7,00	S	45X75X7★	32
2.953	2.961	.276			
75,00	75,20	10,00	V	*45X75X10V★	32
2.953	2.961	.394			
77,72	78,00	12,00	S	*45X78X12★	32
3.060	3.071	.472			
78,00	78,10	11,00	N	710248★➡	66
3.071	3.075	.433			
79,72	80,00	12,00	S	*45X80X12★	32
3.139	3.150	.472			
80,00	80,28	10,00	S	45X80X10★	32
3.150	3.161	.394			
81,72	82,00	12,00	S	*45X82X12★	32
3.217	3.228	.472			
82,00	82,20	8,00	S	*45X82X8★	32
3.228	3.236	.315			
84,72	85,00	12,00	S	*45X85X12★	32
3.335	3.346	.472			
85,00	85,20	10,00	S	45X85X10★	35
3.346	3.354	.394			
85,00	85,25	13,00	S	45X85X13★	45
3.346	3.356	.512			
89,72	90,00	10,00	S	*45X90X10★	32
3.532	3.543	.394			
98,00	98,10	10,50	N	710364★	#
3.858	3.862	.413			
99,72	100,00	10,00	S	*45X100X10★	32
3.926	3.937	.394			

1.775" SHAFT

–	–	–	S	800450	VRS1
–	–	–	S	800451	VRS2
–	–	–	V	800454	VRS1
–	–	–	V	800455	VRS2
–	**–**	**.551**		**99177**	**Redi-Sleeve**
–	1.970	.365	S	710095	#

1.781" (1-25/32") SHAFT

–	–	–	S	800450	VRS1
–	–	–	S	800451	VRS2
–	–	–	V	800454	VRS1
–	–	–	V	800455	VRS2
–	**–**	**.675**		**99179**	**Redi-Sleeve**
2.251	2.259	.375	S	321460	32
2.500	2.505	.312	T	39925➡	FW-H
2.502	2.506	.312	S	452742	45
2.623	2.627	.500	L	50266	5L
2.686	2.690	.500	S	450269	45
2.686	2.690	.500	S	*480269	48
2.750	2.754	.500	S	450285	45
2.758	2.762	.500	S	450280	45
3.189	3.194	.437	S	450089	45
3.189	3.194	.437	S	*480089	48

1.787" SHAFT

–	–	–	S	800450	VRS1

For Illustration and Material Data See Technical Section

Designed For A Specific Application - Not Recommended For General Use ➡ Hydrodynamic Lip Design-CW

* The U.S. customer service number is 877-4-TIMKEN. The Canadian customer service numbers are 800-565-4927 (English) and 800-565-0438 (French-Canadian). ★ Metric Seal

Hsg. Bore	Seal O.D.	Seal Width	Lip Mat'l	Part No.	Type/ Illus.
1.787" SHAFT (cont.)					
–	–	–	S	800451	VRS2
–	–	–	V	800454	VRS1
–	–	–	V	800455	VRS2
3.228	3.238	.335	N	4918	83
3.229	3.238	.335	N	4072➡	83
3.229	3.238	.335	N	4072N➡	83
1.790" SHAFT					
.000	2.488	.275	V	710521	32
1.796" SHAFT					
–	–	–	S	800450	VRS1
–	–	–	S	800451	VRS2
–	–	–	V	800454	VRS1
–	–	–	V	800455	VRS2
2.524	2.800	.599	S	8314	#
2.725	2.730	.500	L	6781	201
1.803" SHAFT					
–	–	–	S	800450	VRS1
–	–	–	S	800451	VRS2
–	–	–	V	800454	VRS1
–	–	–	V	800455	VRS2
2.965	2.969	.250	F	5070	29
1.809" SHAFT					
–	–	–	S	800450	VRS1
–	–	–	S	800451	VRS2
–	–	–	V	800454	VRS1
–	–	–	V	800455	VRS2
-	**-**	**.563**		**99181**	**Redi-Sleeve**
2.361	2.365	.380	S	4249&	287
46,00mm (1.811") SHAFT					
–	–	–	S	800450	VRS1
–	–	–	S	800451	VRS2
–	–	–	V	800454	VRS1
–	–	–	V	800455	VRS2
-	**-**	**.563**		**99181**	**Redi-Sleeve**
53,75	*54,00*	*9,00*	*S*	*46X54X9★	32
2.116	2.126	.354			
57,75	*58,00*	*7,00*	*S*	*46X58X7★	32
2.273	2.283	.276			
58,00	*58,28*	*7,00*	*N*	224650★➡	32
2.283	2.294	.276			
58,85	*59,10*	*12,00*	*S*	*46X59.1X12★	32
2.317	2.327	.472			
59,00	*59,20*	*8,00*	*S*	*46X59X8★	32
2.323	2.331	.315			
59,75	*60,00*	*7,00*	*S*	*46X60X7★	32
2.352	2.362	.276			
59,75	*60,00*	*10,00*	*S*	*46X60X10★	32
2.352	2.362	.394			
60,00	*60,20*	*8,00*	*S*	*46X60X8★	32
2.362	2.370	.315			
60,00	*60,28*	*7,00*	*H*	224660★➡	32
2.362	2.373	.276			
62,00	*62,10*	*8,00*	*S*	224662★	35
2.441	2.445	.315			
62,00	*62,20*	*8,00*	*S*	*46X62X8★	32
2.441	2.449	.315			
62,00	*62,20*	*20,50*	*S*	710394★	#
2.441	2.449	.807			
63,00	*63,40*	*7,70*	*N*	224663★➡	35
2.480	2.496	.303			
65,00	*65,20*	*7,00*	*S*	46X65X7★	32
2.559	2.567	.276			
46,00mm (1.811") SHAFT (cont.)					
68,00	*68,20*	*8,00*	*S*	*46X68X8★	32
2.677	2.685	.315			
68,50	*68,70*	*7,50*	*S*	710161★	#
2.697	2.705	.295			
69,40	*69,60*	*10,00*	*S*	710128★	#
2.732	2.740	.394			
69,40	*69,60*	*11,00*	*S*	710126★	#
2.732	2.740	.433			
70,00	*70,10*	*8,00*	*S*	710238★➡	32
2.756	2.760	.315			
70,00	*70,20*	*8,00*	*S*	46X70X8★	32
2.756	2.764	.315			
61,00	*61,20*	*8,00*	*S*	710260★⬅	32
2.756	2.764	.315			
72,00	*72,20*	*8,00*	*S*	*46X72X8★	32
2.835	2.843	.315			
73,00	*73,20*	*8,00*	*S*	*46X73X8★	32
2.874	2.882	.315			
94,50	*94,70*	*8,00*	*S*	710377★	#
3.720	3.728	.315			
1.812" (1-13/16") SHAFT					
–	–	–	S	800450	VRS1
–	–	–	S	800451	VRS2
–	–	–	V	800454	VRS1
–	–	–	V	800455	VRS2
-	**-**	**.563**		**99181**	**Redi-Sleeve**
2.250	2.258	.312	S	*6402S	35
2.327	2.332	.437	S	444116	44
2.437	**2.441**	**.468**	**S**	**451817**	**45**
2.437	2.441	.468	S	471817	47
2.561	2.565	.437	S	*452872	45
2.561	2.566	.437	S	*203071	203
2.561	2.566	.500	S	203006	203
2.561	2.566	.500	F	*205006	205
2.562	2.566	.312	V	5133	48
2.562	2.567	.315	T	39930➡	FW-H
2.563	2.567	.375	T	39835➡	W
2.623	**2.627**	**.375**	**S**	**472070**	**47**
2.623	2.627	.455	S	8181NA➡	74
2.623	2.627	.455	S	*9540➡	#
2.623	2.627	.500	S	*450267	45
2.623	2.627	.500	N	*450267N	45
2.623	2.627	.500	S	*470267	47
2.623	2.627	.500	V	*470267V	47
2.623	2.627	.500	S	*480267	48
2.623	2.627	.500	N	*480267N	48
2.623	2.627	.615	S	3618➡	86
2.624	2.629	.500	S	*482695N	48
2.686	**2.690**	**.375**	**S**	**471866**	**47**
2.686	2.690	.375	N	*471866N	47
2.686	2.690	.437	S	*451508	45
2.686	2.690	.500	S	*450270	45
2.686	2.690	.500	S	*480270	48
2.718	2.722	.270	S	7186S	200
2.718	2.727	.400	S	*200169	200
2.750	**2.754**	**.375**	**S**	**473449**	**47**
2.750	2.754	.500	S	450118	45
2.750	2.754	.500	S	*480118	48
2.758	2.762	.500	S	*450281	45
2.758	2.762	.500	S	480281	48
2.777	2.783	.416	S	*9190N&	47
2.777	2.783	.575	V	3604➡	86
2.874	2.878	.290	S	*200334	200
2.875	**2.879**	**.375**	**S**	**473450**	**47**
2.875	2.879	.375	V	473450V	47
2.875	2.879	.468	S	450116	45
2.875	2.879	.468	S	*480116	48
2.996	3.001	.500	S	*450193	45
2.996	3.001	.500	S	*480193	48
3.000	3.005	.455	S	*3700➡	86

For Illustration and Material Data See Technical Section

Designed For A Specific Application - Not Recommended For General Use ➡ Hydrodynamic Lip Design-CW ⬅ Hydrodynamic Lip Design-CCW & Flanged O.D.

* The U.S. customer service number is 877-4-TIMKEN. The Canadian customer service numbers are 800-565-4927 (English) and 800-565-0438 (French-Canadian). ★ Metric Seal

1.812" (1-13/16") SHAFT (cont.)

Hsg. Bore	Seal O.D.	Seal Width	Lip Mat'l	Part No.	Type/ Illus.
3.000	3.005	.455	S	7044NA➡	86
3.091	3.096	.485	V	4278&	86
3.125	3.130	.375	S	481992	48
3.125	3.130	.500	S	*451993	45
3.189	3.194	.437	S	*410090	41
3.189	**3.194**	**.437**	**S**	**450090**	**45**
3.189	3.194	.437	S	*470090	47
3.189	3.194	.437	S	*480090	48
4.123	4.128	.746	L	6930	21

1.813" SHAFT

Hsg. Bore	Seal O.D.	Seal Width	Lip Mat'l	Part No.	Type/ Illus.
2.408	–	.300	S	710409%	#

1.815" SHAFT

Hsg. Bore	Seal O.D.	Seal Width	Lip Mat'l	Part No.	Type/ Illus.
–	–	–	S	800450	VRS1
–	–	–	S	800451	VRS2
–	–	–	V	800454	VRS1
–	–	–	V	800455	VRS2
–	**–**	**.563**		**99181**	**Redi-Sleeve**
2.562	2.566	.562	S	2207	290

1.821" SHAFT

Hsg. Bore	Seal O.D.	Seal Width	Lip Mat'l	Part No.	Type/ Illus.
–	–	–	S	800450	VRS1
–	–	–	S	800451	VRS2
–	–	–	V	800454	VRS1
–	–	–	V	800455	VRS2
2.623	2.627	.250	S	44053	4S

1.825" SHAFT

Hsg. Bore	Seal O.D.	Seal Width	Lip Mat'l	Part No.	Type/ Illus.
–	–	–	S	800450	VRS1
–	–	–	S	800451	VRS2
–	–	–	V	800454	VRS1
–	–	–	V	800455	VRS2
2.750	2.754	.468	S	7600S	47

1.830" SHAFT

Hsg. Bore	Seal O.D.	Seal Width	Lip Mat'l	Part No.	Type/ Illus.
–	–	–	S	800450	VRS1
–	–	–	S	800451	VRS2
–	–	–	V	800454	VRS1
–	–	–	V	800455	VRS2
2.570	2.574	.250	L	6960	4L
2.570	2.574	.250	S	*8473S	29

46,50mm (1.831") SHAFT

Hsg. Bore	Seal O.D.	Seal Width	Lip Mat'l	Part No.	Type/ Illus.
–	–	–	S	800450	VRS1
–	–	–	S	800451	VRS2
–	–	–	V	800454	VRS1
–	–	–	V	800455	VRS2
90,00	*90,20*	*12,00*	*N*	710397★	#
3.543	3.551	.472			

1.843" (1-27/32") SHAFT

Hsg. Bore	Seal O.D.	Seal Width	Lip Mat'l	Part No.	Type/ Illus.
–	–	–	S	800450	VRS1
–	–	–	S	800451	VRS2
–	–	–	V	800454	VRS1
–	–	–	V	800455	VRS2
2.400	2.404	.235	F	291295	29
2.502	2.506	.375	S	471841	47
2.502	2.506	.500	S	*450783	45
2.502	2.506	.500	S	*470783	47
2.623	2.627	.250	S	*40268S	4S
2.623	2.627	.375	S	473451	47
2.623	2.627	.500	S	*450268	45
2.623	2.627	.500	N	*450268N	45
2.623	2.627	.500	S	*480268	48
2.623	2.627	.500	N	*480268N	48

1.843" (1-27/32") SHAFT (cont.)

Hsg. Bore	Seal O.D.	Seal Width	Lip Mat'l	Part No.	Type/ Illus.
2.672	2.676	.187	N	*8250	#
2.748	2.751	.425	V	714675⬅➡	#
2.750	**2.754**	**.375**	**S**	**473452**	**47**
2.750	2.754	.500	S	*450331	45
2.750	2.754	.500	N	*450331N	45
2.750	2.754	.500	N	470331N	47
2.750	2.754	.500	N	*480331N	48
2.875	2.879	.375	S	473453	47
2.875	2.879	.468	S	*450293	45

47,00mm (1.850") SHAFT

Hsg. Bore	Seal O.D.	Seal Width	Lip Mat'l	Part No.	Type/ Illus.
–	–	–	S	800450	VRS1
–	–	–	S	800451	VRS2
–	–	–	V	800454	VRS1
–	–	–	V	800455	VRS2
0,00	*61,98*	*10,29*	*S*	710501★	#
.000	2.440	.405			
56,75	*57,00*	*7,00*	*S*	*47X57X7★	32
2.234	2.244	.276			
59,75	*60,00*	*7,00*	*S*	*47X60X7★	32
2.352	2.362	.276			
60,00	*60,20*	*8,00*	*S*	*47X60X8★	32
2.362	2.370	.315			
61,75	*62,00*	*6,00*	*S*	*47X62X6★	32
2.431	2.441	.236			
62,00	*62,10*	*9,00*	*S*	710320★	48
2.441	2.445	.354			
62,00	*62,20*	*8,00*	*S*	47X62X8★	32
2.441	2.449	.315			
64,00	*64,08*	*7,00*	*S*	710191★	25
2.520	2.523	.276			
64,00	*64,28*	*14,00*	*S*	1937★	#
2.520	2.531	.551			
64,75	*65,00*	*10,00*	*S*	*47X65X10★	32
2.549	2.559	.394			
65,00	*65,20*	*8,00*	*S*	47X65X8★	32
2.559	2.567	.315			
66,00	*66,10*	*11,00*	*S*	710215★	66
2.598	2.602	.433			
68,00	*68,27*	*10,00*	*S*	47X68X10★	32
2.677	2.688	.394			
68,00	*68,27*	*10,00*	*S*	1187★	32
2.677	2.688	.394			
69,00	*69,14*	*10,10*	*N*	3606★⬅➡	7S
2.717	2.722	.398			
70,00	*70,20*	*10,00*	*S*	47X70X10★	32
2.756	2.764	.394			
72,00	*72,23*	*8,00*	*S*	224772★	48
2.835	2.844	.315			
72,20	*72,40*	*6,00*	*S*	710337★	34
2.843	2.850	.236			
80,00	*80,20*	*12,70*	*S*	710150★	#
3.150	3.157	.500			
84,00	*84,20*	*11,00*	*S*	710143★	#
3.307	3.315	.433			

1.869" SHAFT

Hsg. Bore	Seal O.D.	Seal Width	Lip Mat'l	Part No.	Type/ Illus.
–	–	–	S	800450	VRS1
–	–	–	S	800451	VRS2
–	–	–	V	800454	VRS1
–	–	–	V	800455	VRS2
–	**–**	**.889**		**99186**	**Redi-Sleeve**
2.518	2.522	.375	S	332062➡	33
2.518	2.522	.437	S	*2102	#
2.781	2.789	.354	S	1959	32
3.744	3.749	.500	N	*456053N	45

1.873" SHAFT

Hsg. Bore	Seal O.D.	Seal Width	Lip Mat'l	Part No.	Type/ Illus.
–	–	–	S	800450	VRS1

For Illustration and Material Data See Technical Section
Designed For A Specific Application - Not Recommended For General Use ➡ Hydrodynamic Lip Design-CW ⬅➡ Hydrodynamic Lip Design-Bidirectional % External Bore & Flanged O.D. * The U.S. customer service number is 877-4-TIMKEN. The Canadian customer service numbers are 800-565-4927 (English) and 800-565-0438 (French-Canadian).
★ Metric Seal

1.873" SHAFT (cont.)

Hsg. Bore	Seal O.D.	Seal Width	Lip Mat'l	Part No.	Type/ Illus.
–	–	–	S	800451	VRS2
–	–	–	V	800454	VRS1
–	–	–	V	800455	VRS2
–	**–**	**.175**		**99190**	**Redi-Sleeve**
–	**–**	**.295**		***99188**	**Redi-Sleeve**
–	**–**	**.375**		***99184**	**Redi-Sleeve**
–	**–**	**.563**		**99187**	**Redi-Sleeve**
2.684	2.684	.544	S	8521S%	200E
2.716	2.806	.281	S	200752%	200E
2.878	3.250	.875	S	*8632S	#

1.874" SHAFT

Hsg. Bore	Seal O.D.	Seal Width	Lip Mat'l	Part No.	Type/ Illus.
2.559	2.569	.335	V	712692	#
2.676	2.682	.410	N	4577	#
3.159	3.163	.500	V	100712V	#
3.159	3.163	.500	V	100715V	#

1.875" (1-7/8") SHAFT

Hsg. Bore	Seal O.D.	Seal Width	Lip Mat'l	Part No.	Type/ Illus.
–	–	–	S	800450	VRS1
–	–	–	S	800451	VRS2
–	–	–	V	800454	VRS1
–	–	–	V	800455	VRS2
–	**–**	**.175**		**99190**	**Redi-Sleeve**
–	**–**	**.295**		***99188**	**Redi-Sleeve**
–	**–**	**.375**		***99184**	**Redi-Sleeve**
–	**–**	**.563**		**99187**	**Redi-Sleeve**
2.315	2.321	.203	S	8362	33
2.397	**2.403**	**.250**	**S**	**353120**	**35**
2.400	2.405	.240	S	*7679	44
2.400	2.405	.240	S	7934S	204
2.441	2.445	.325	S	1949	48
2.441	2.445	.325	S	*483801	48
2.470	**2.475**	**.437**	**S**	**472747**	**47**
2.500	2.504	.437	N	*451162N	45
2.502	**2.506**	**.312**	**S**	**473454**	**47**
2.502	2.506	.328	S	350823	35
2.502	2.506	.375	S	*452041	45
2.502	2.506	.375	S	472041	47
2.502	2.506	.375	N	*472041N	47
2.502	2.506	.375	S	*482041	48
2.502	2.506	.375	N	482041N	48
2.502	2.506	.406	S	*451447	45
2.502	2.506	.500	S	*450823	45
2.502	2.506	.500	S	*480823	48
2.502	2.511	.250	S	340823	34
2.560	2.565	.406	N	2942➡	47
2.560	2.565	.406	N	*7782N	48
2.560	2.565	.468	S	*484247	48
2.561	2.565	.500	S	441853	44
2.561	2.565	.500	S	*451853	45
2.561	2.565	.500	S	*471853	47
2.561	2.565	.528	N	2692➡	76
2.561	**2.571**	**.312**	**S**	**350936**	**35**
2.561	2.571	.312	N	*350936N	35
2.622	2.628	.380	H	*9927H➡	33
2.623	2.627	.250	S	40071S	4S
2.623	**2.627**	**.312**	**S**	**472439**	**47**
2.623	2.627	.312	A	472439A	47
2.623	2.627	.312	V	472439V	47
2.623	2.627	.312	S	*482439	48
2.623	2.627	.500	S	*410071	41
2.623	2.627	.500	N	*410071N	41
2.623	2.627	.500	S	*450071	45
2.623	2.627	.500	H	*450071H	45
2.623	2.627	.500	N	*450071N	45
2.623	2.627	.500	V	*450071V	45

1.875" (1-7/8") SHAFT (cont.)

Hsg. Bore	Seal O.D.	Seal Width	Lip Mat'l	Part No.	Type/ Illus.
2.623	2.627	.500	S	*470071	47
2.623	2.627	.500	H	*470071H	47
2.623	2.627	.500	S	*480071	48
2.623	2.627	.500	V	*480071V	48
2.624	2.628	.375	H	331227H➡	33
2.625	2.629	.500	S	*452774	45
2.625	2.640	.433	T	712102➡	FW-H
2.628	2.633	.347	F	6985	29
2.677	2.681	.375	N	710211➡	74
68,00	*68,30*	*14,00*	*N*	712516★➡	#
2.677	2.689	.551			
2.686	**2.690**	**.375**	**S**	**471868**	**47**
2.686	2.690	.500	S	*410272	41
2.686	2.690	.500	S	*450272	45
2.686	2.690	.500	S	*470272	47
2.686	2.690	.500	S	*480272	48
2.687	2.762	.280	S	*200958%	200E
2.716	2.725	.394	S	710388➡	32
2.718	2.722	.468	F	*6110	29
2.720	2.725	.235	F	*7107A	29
2.750	2.754	.250	S	42421S	4S
2.750	2.754	.312	S	*412572	41
2.750	**2.754**	**.312**	**S**	**472572**	**47**
2.750	2.754	.312	S	*482572	48
2.750	2.754	.500	S	3946⬅➡	86
2.750	2.754	.500	S	*410117	41
2.750	2.754	.500	H	*410117H	41
2.750	2.754	.500	N	*410117N	41
2.750	2.754	.500	S	450117	45
2.750	2.754	.500	S	*470117	47
2.750	2.754	.500	H	*470117H	47
2.750	2.754	.500	N	*470117N	47
2.750	2.754	.500	S	*480117	48
2.758	**2.762**	**.375**	**S**	**473179**	**47**
2.758	2.762	.425	V	*3028V➡	25
2.758	2.762	.425	N	6712NA➡	74
2.758	2.762	.437	S	*450654	45
2.758	2.762	.437	N	*450654N	45
2.758	2.762	.500	S	6460S	41
2.758	2.762	.500	S	*410283	41
2.758	2.762	.500	S	*450283	45
2.758	2.762	.500	H	*450283H	45
2.758	2.762	.500	S	*470283	47
2.758	2.762	.500	H	*470283H	47
2.758	2.762	.500	N	*470283N	47
2.758	2.762	.500	S	*480283	48
2.758	2.762	.500	H	*480283H	48
2.782	**2.786**	**.500**	**S**	**414045**	**41**
2.803	2.808	.433	S	*4310	285
2.812	2.816	.770	N	8515N&	74
2.812	3.000	.500	L	*7215	5L
2.813	2.817	.500	S	5126&	74
2.835	**2.839**	**.375**	**S**	**473455**	**47**
2.835	2.839	.468	S	*411463	41
2.835	2.839	.468	S	*451463	45
2.835	2.839	.468	S	*471463	47
2.835	2.839	.468	S	*481463	48
2.873	2.877	.394	S	*2826	#
2.875	2.879	.312	V	473238V	47
2.875	**2.879**	**.312**	**S**	**473238**	**47**
2.875	2.879	.312	S	*483238	48
2.875	2.879	.312	V	483238V	48
2.875	2.879	.437	S	*411936	41
2.875	2.879	.437	N	*411936N	41
2.875	2.879	.437	S	*451936	45
2.875	2.879	.437	H	*451936H	45
2.875	2.879	.437	V	*451936V	45
2.875	2.879	.437	S	*471936	47
2.875	2.879	.437	S	*481936	48
2.875	2.879	.468	S	*410082	41
2.875	2.879	.468	H	*410082H	41
2.875	2.879	.468	S	450082	45

For Illustration and Material Data See Technical Section
Designed For A Specific Application - Not Recommended For General Use ➡ Hydrodynamic Lip Design-CW ⬅➡ Hydrodynamic Lip Design-Bidirectional % External Bore
& Flanged O.D. * The U.S. customer service number is 877-4-TIMKEN. The Canadian customer service numbers are 800-565-4927 (English) and 800-565-0438 (French-Canadian).
★ Metric Seal

1.875" (1-7/8") SHAFT (cont.)

Hsg. Bore	Seal O.D.	Seal Width	Lip Mat'l	Part No.	Type/ Illus.
2.875	2.879	.468	N	*450082N	45
2.875	2.879	.468	S	*470082	47
2.875	2.879	.468	S	*480082	48
2.875	2.879	.500	S	*3329	#
2.875	2.879	.500	S	*450779	45
2.875	2.886	.625	U	710019	#
2.877	2.865	.470	S	9912¶	25
2.877	2.865	.490	S	*2689¶	56
2.877	2.865	.490	S	2689S	25
2.901	2.907	.315	S	*4051	#
2.965	2.969	.250	F	6064	29
2.995	3.000	.375	F	*5970	29
2.995	3.000	.437	S	203034	203
2.996	3.000	.375	S	*473456	47
2.996	3.001	.375	L	6547	201
2.996	3.001	.500	S	*410084	41
2.996	**3.001**	**.500**	**S**	**450084**	**45**
2.996	3.001	.500	S	*470084	47
2.996	3.001	.500	S	*480084	48
2.998	3.002	.375	F	*290944	29
3.000	**3.005**	**.312**	**S**	**473239**	**47**
3.000	3.005	.312	S	*483239	48
3.000	3.005	.375	S	*451139	45
3.000	3.005	.375	S	*471139	47
3.000	3.005	.375	S	*481139	48
3.000	3.005	.375	H	*481139H	48
3.000	3.005	.500	S	*410298	41
3.000	3.005	.500	N	*410298N	41
3.000	3.005	.500	S	450298	45
3.000	3.005	.500	S	*470298	47
3.000	3.005	.500	S	*480298	48
3.000	3.005	.625	H	8165	#
3.061	**3.066**	**.375**	**S**	**473457**	**47**
3.061	3.066	.500	S	*410304	41
3.061	3.066	.500	S	*450304	45
3.061	3.066	.500	H	*450304H	45
3.061	3.066	.500	S	*470304	47
3.061	3.066	.500	S	*480304	48
3.105	3.110	.500	L	7216&	47
3.125	**3.130**	**.312**	**S**	**473240**	**47**
3.125	3.130	.312	S	*483240	48
3.125	3.130	.375	S	*472005	47
3.125	3.130	.375	S	*482005	48
3.125	3.130	.500	S	*410720	41
3.125	3.130	.500	S	*450720	45
3.125	3.130	.500	S	*470720	47
3.125	3.130	.500	S	*480720	48
3.149	3.154	.359	S	*204047	204
3.150	3.146	.930	S	3186¶	59
3.150	3.146	.930	S	3195¶	59
3.150	3.155	.250	S	715100	#
3.160	3.165	.530	V	710452	72
3.160	3.165	.530	S	*4431	72
3.160	3.165	.530	N	*4431N	72
3.160	3.165	.530	V	*4431V	72
3.160	3.165	.562	N	6808N	45
3.160	3.165	.695	N	9316	72
3.160	3.165	.720	V	719316	72
3.161	3.165	.695	V	100675	72
3.189	**3.194**	**.375**	**S**	**473458**	**47**
3.189	3.194	.437	S	*410092	41
3.189	3.194	.437	S	*450092	45
3.189	3.194	.437	S	*470092	47
3.189	3.194	.437	S	*480092	48
3.251	3.256	.437	S	*412022	41
3.251	3.256	.500	S	*411078	41
3.251	**3.256**	**.500**	**S**	**451078**	**45**
3.251	3.256	.500	S	*471078	47
3.251	3.256	.500	S	*481078	48
3.350	3.355	.468	S	*452023	45
3.371	**3.376**	**.468**	**S**	**410524**	**41**
3.371	3.376	.468	S	*450524	45

1.875" (1-7/8") SHAFT (cont.)

Hsg. Bore	Seal O.D.	Seal Width	Lip Mat'l	Part No.	Type/ Illus.
3.371	3.376	.468	S	*470524	47
3.371	3.376	.468	S	*480524	48
3.375	4.812	.312	S	7105S	#
3.500	3.505	.500	S	*477609	47
4.010	4.014	1.000	L	6127	31
4.331	4.336	.500	S	477105	47

1.880" SHAFT

–	–	–	S	800450	VRS1
–	–	–	S	800451	VRS2
–	–	–	V	800454	VRS1
–	–	–	V	800455	VRS2
2.398	2.414	.250	S	*6910S	35
2.562	2.566	.250	S	9049	25
2.562	2.566	.250	S	9049N	25
3.169	3.176	.480	V	100086	#

1.886" SHAFT

–	–	–	S	800450	VRS1
–	–	–	S	800451	VRS2
–	–	–	V	800454	VRS1
–	–	–	V	800455	VRS2
2.699	2.704	.350	N	4333N⬅	79
2.750	2.765	1.375	N	4503N⬅	79
2.756	2.756	.823	N	714503	#

48,00mm (1.890") SHAFT

–	–	–	S	800450	VRS1
–	–	–	S	800451	VRS2
–	–	–	V	800454	VRS1
–	–	–	V	800455	VRS2
–	–	–	S	800500	VRS1
–	–	–	V	800504	VRS1
–	–	–	V	800505	VRS2
–	**–**	**.551**		**99189**	**Redi-Sleeve**
57,75	*58,00*	*4,00*	*S*	*48X58X4★	32
2.273	2.283	.157			
58,00	*58,20*	*8,00*	*S*	*48X58X8★	32
2.283	2.291	.315			
58,75	*59,00*	*6,00*	*S*	*48X59X6★	32
2.313	2.323	.236			
59,75	*60,00*	*8,00*	*S*	*48X60X8★	32
2.352	2.362	.315			
59,75	*60,00*	*10,00*	*S*	*48X60X10★	32
2.352	2.362	.394			
60,00	*60,20*	*9,00*	*S*	710356★➡	32
2.362	2.370	.354			
61,75	*62,00*	*7,00*	*S*	*48X62X7★	32
2.431	2.441	.276			
61,75	*62,00*	*9,00*	*S*	*48X62X9★	32
2.431	2.441	.354			
61,75	*62,00*	*10,00*	*S*	*48X62X10★	32
2.431	2.441	.394			
61,75	*62,00*	*12,00*	*S*	*48X62X12★	32
2.431	2.441	.472			
62,00	*62,10*	*8,00*	*S*	48X62X8★	35
2.441	2.445	.315			
62,00	*62,10*	*8,00*	*S*	224820★	32
2.441	2.445	.315			
62,00	*62,10*	*24,00*	*S*	1956★	#
2.441	2.445	.945			
62,00	*62,20*	*6,00*	*S*	710322★	34
2.441	2.449	.236			
62,00	*62,20*	*8,00*	*V*	*48X62X8V★	35
2.441	2.449	.315			
62,00	*62,20*	*8,00*	*S*	*320832★	32
2.441	2.449	.315			
62,00	*62,25*	*6,00*	*S*	1188★	34
2.441	2.451	.236			

For Illustration and Material Data See Technical Section
Designed For A Specific Application - Not Recommended For General Use ➡ Hydrodynamic Lip Design-CW ⬅ Hydrodynamic Lip Design-CCW & Flanged O.D.
¶ Expandable O.D.
* The U.S. customer service number is 877-4-TIMKEN. The Canadian customer service numbers are 800-565-4927 (English) and 800-565-0438 (French-Canadian). ★ Metric Seal

48,00mm (1.890") SHAFT (cont.)

Hsg. Bore	Seal O.D.	Seal Width	Lip Mat'l	Part No.	Type/ Illus.
62,00	62,28	8,00	N	224810★	32
2.441	2.452	.315			
63,00	63,09	9,00	S	48X63X9★	47
2.480	2.484	.354			
63,00	63,09	9,00	S	1969★	47
2.480	2.484	.354			
64,00	64,20	14,00	S	710167★	#
2.520	2.528	.551			
64,75	65,00	7,00	S	∗48X65X7★	32
2.549	2.559	.276			
64,75	65,00	9,00	S	∗48X65X9★	32
2.549	2.559	.354			
64,75	65,00	12,00	S	∗48X65X12★	32
2.549	2.559	.472			
65,00	65,10	7,00	S	∗493759★	49
2.559	2.563	.276			
65,00	65,15	24,50	N	4528N★⬅	66
2.559	2.565	.965			
65,00	65,20	10,00	V	∗48X65X10V★	32
2.559	2.567	.394			
65,00	65,20	10,00	S	224865★	32
2.559	2.567	.394			
65,00	65,30	8,00	S	1973★	25
2.559	2.571	.315			
65,00	65,30	10,00	S	48X65X10★	32
2.559	2.571	.394			
65,00	65,30	10,00	V	716484★	32
2.559	2.571	.394			
65,07	65,20	12,70	S	∗2820★	#
2.562	2.567	.500			
66,75	67,00	11,00	S	∗48X67X11★	32
2.628	2.638	.433			
67,75	68,00	8,00	S	∗48X68X8★	32
2.667	2.677	.315			
68,00	68,27	10,00	N	48X68X10★	32
2.677	2.688	.394			
68,00	68,27	10,00	N	224835★	32
2.677	2.688	.394			
68,00	68,30	11,00	S	224840★➡	32
2.677	2.689	.433			
68,58	68,68	14,78	S	9449★⬅	74
2.700	2.704	.582			
69,75	70,00	7,00	S	∗48X70X7★	32
2.746	2.756	.276			
69,75	70,00	10,00	S	∗48X70X10★	32
2.746	2.756	.394			
69,75	70,00	12,00	S	∗48X70X12★	32
2.746	2.756	.472			
70,00	70,20	8,00	S	48X70X8★	35
2.756	2.764	.315			
70,00	70,20	9,00	S	710255★	#
2.756	2.764	.354			
70,00	70,20	12,00	S	710313★➡	32
2.756	2.764	.472			
70,00	70,25	9,00	H	712010★➡	32
2.756	2.766	.354			
70,00	70,28	9,00	S	48X70X9★	35
2.756	2.767	.354			
70,00	70,28	10,00	S	1994★	32
2.756	2.767	.394			
70,25	70,50	10,00	S	∗48X70.5X10★	32
2.766	2.776	.394			
71,37	0,00	17,78	N	710453★	#
2.810	.000	.700			
71,75	72,00	8,00	S	∗48X72X8★	32
2.825	2.835	.315			
71,75	72,00	9,00	S	∗48X72X9★	32
2.825	2.835	.354			
71,75	72,00	10,00	S	∗48X72X10★	32
2.825	2.835	.394			
71,75	72,00	12,00	S	∗48X72X12★	32
2.825	2.835	.472			

48,00mm (1.890") SHAFT (cont.)

Hsg. Bore	Seal O.D.	Seal Width	Lip Mat'l	Part No.	Type/ Illus.
72,00	72,20	8,00	V	∗48X72X8V★	35
2.835	2.843	.315			
72,00	72,28	10,00	S	224850★	32
2.835	2.846	.394			
72,00	72,31	7,00	S	48X72X7★	32
2.835	2.847	.276			
72,00	72,31	7,00	S	1208★	32
2.835	2.847	.276			
72,00	72,35	8,50	S	224872★	32
2.835	2.848	.335			
72,25	72,50	10,00	S	∗48X72.5X10★	32
2.844	2.854	.394			
73,00	73,10	7,00	S	224870★	47
2.874	2.878	.276			
73,75	74,00	10,00	S	∗48X74X10★	32
2.903	2.913	.394			
73,75	74,00	12,00	S	∗48X74X12★	32
2.903	2.913	.472			
74,00	74,23	10,00	S	224874★	32
2.913	2.922	.394			
74,00	74,30	10,00	N	224815★	40
2.913	2.925	.394			
74,75	75,00	12,00	S	∗48X75X12★	32
2.943	2.953	.472			
75,00	75,20	10,00	S	48X75X10★	32
2.953	2.961	.394			
78,00	78,20	8,00	S	∗48X78X8★	32
3.071	3.079	.315			
79,72	80,00	10,00	S	∗48X80X10★	32
3.139	3.150	.394			
80,00	80,20	8,00	S	48X80X8★	32
3.150	3.157	.315			
81,72	82,00	10,00	S	∗48X82X10★	32
3.217	3.228	.394			
82,00	82,20	8,00	S	∗48X82X8★	32
3.228	3.236	.315			
84,72	85,00	10,00	S	∗48X85X10★	32
3.335	3.346	.394			
85,00	85,20	8,00	S	∗48X85X8★	32
3.346	3.354	.315			
88,00	88,20	8,00	S	∗48X88X8★	32
3.465	3.472	.315			
89,72	90,00	13,00	S	∗48X90X13★	32
3.532	3.543	.512			
90,00	90,20	10,00	S	48X90X10★	35
3.543	3.551	.394			
108,50	108,70	13,00	S	710296★	#
4.272	4.280	.512			

1.893" SHAFT

–	–	–	S	800500	VRS1
–	–	–	V	800504	VRS1
–	–	–	V	800505	VRS2
–	**–**	**.551**		**99189**	**Redi-Sleeve**
2.434	2.438	.250	S	8704S	33

1.906" (1-29/32") SHAFT

–	–	–	S	800500	VRS1
–	–	–	V	800504	VRS1
–	–	–	V	800505	VRS2
3.189	3.194	.406	N	∗8084N	45

1.910" SHAFT

–	–	–	S	800500	VRS1
–	–	–	V	800504	VRS1
–	–	–	V	800505	VRS2
–	**–**	**.375**		**∗99192**	**Redi-Sleeve**
2.760	2.760	.070	S	∗8669	#

For Illustration and Material Data See Technical Section

Designed For A Specific Application - Not Recommended For General Use ➡ Hydrodynamic Lip Design-CW ⬅ Hydrodynamic Lip Design-CCW

∗ The U.S. customer service number is 877-4-TIMKEN. The Canadian customer service numbers are 800-565-4927 (English) and 800-565-0438 (French-Canadian). ★ Metric Seal

Hsg. Bore	Seal O.D.	Seal Width	Lip Mat'l	Part No.	Type/ Illus.
1.915" SHAFT					
–	–	–	S	800500	VRS1
–	–	–	V	800504	VRS1
–	–	–	V	800505	VRS2
–	**–**	**.375**		***99192**	**Redi-Sleeve**
2.532	2.548	.250	S	*7020	#
2.533	2.537	.250	S	*6971S	33
49,00mm (1.929") SHAFT					
–	–	–	S	800500	VRS1
–	–	–	V	800504	VRS1
–	–	–	V	800505	VRS2
61,75	*62,00*	*6,00*	*S*	*49X62X6★	32
2.431	2.441	.236			
62,00	*62,15*	*8,00*	*S*	4904★	66
2.441	2.447	.315			
64,00	*64,28*	*12,50*	*S*	1936★	#
2.520	2.531	.492			
65,10	*65,20*	*8,00*	*T*	39877★⬅➡	WW
2.563	2.567	.315			
70,00	*70,10*	*12,50*	*S*	710305★&	#
2.756	2.760	.492			
72,20	*72,50*	*8,00*	*S*	710148★	97
2.843	2.854	.315			
75,75	*76,00*	*15,00*	*S*	*49X76X15★	32
2.982	2.992	.591			
79,00	*79,10*	*17,50*	*N*	224979★➡	47
3.110	3.114	.689			
100,00	*100,20*	*8,00*	*S*	710374★	#
3.937	3.945	.315			
1.937" (1-15/16") SHAFT					
–	–	–	S	800500	VRS1
–	–	–	V	800504	VRS1
–	–	–	V	800505	VRS2
–	**–**	**.563**		**99193**	**Redi-Sleeve**
2.412	**2.416**	**.468**	**S**	**470409**	**47**
2.437	**2.441**	**.250**	**S**	**474269**	**47**
2.500	2.510	.374	V	*320510V	32
2.502	2.506	.375	S	*451195	45
2.502	2.506	.375	V	*451195V	45
2.502	**2.506**	**.375**	**S**	**471195**	**47**
2.502	2.506	.375	S	481195	48
2.502	2.506	.375	N	*481195N	48
2.561	2.565	.500	S	*411854	41
2.561	**2.565**	**.500**	**S**	**471854**	**47**
2.562	2.566	.317	S	710058	48
2.562	2.566	.437	S	*204079	204
2.562	2.567	.317	S	*480550	48
2.578	2.830	.292	S	9150S	25
2.623	**2.627**	**.312**	**S**	**472319**	**47**
2.623	2.627	.312	V	*472319V	47
2.623	2.627	.312	S	*482319	48
2.623	2.627	.500	S	*450455	45
2.623	2.627	.500	S	*470455	47
2.623	2.627	.500	S	*480455	48
2.625	2.629	.375	S	*481166	48
2.686	2.690	.304	N	3173	48
2.686	2.690	.312	H	483459H	48
2.686	**2.690**	**.312**	**S**	**473459**	**47**
2.686	2.690	.375	S	471869	47
2.686	2.690	.375	N	*471869N	47
2.686	2.690	.500	H	6988H	33
2.686	2.690	.500	S	*331882	33
2.686	2.690	.500	S	*410138	41
2.686	2.690	.500	S	*450138	45
2.686	2.690	.500	V	470138V➡	47
2.686	2.690	.500	S	*480138	48
2.686	2.690	.500	H	*480138H	48
2.713	2.717	.468	S	*450655	45

Hsg. Bore	Seal O.D.	Seal Width	Lip Mat'l	Part No.	Type/ Illus.
1.937" (1-15/16") SHAFT (cont.)					
2.750	**2.754**	**.312**	**S**	**473241**	**47**
2.750	2.754	.312	S	*483241	48
2.750	2.754	.313	V	710162	48
2.750	2.754	.500	S	*411937	41
2.750	2.754	.500	S	*451937	45
2.750	2.754	.500	H	*451937H	45
2.758	**2.762**	**.500**	**S**	**450279**	**45**
2.824	2.828	.500	N	*451117N	45
2.875	2.879	.290	S	*200396	200
2.875	**2.879**	**.312**	**S**	**472144**	**47**
2.875	2.879	.312	S	*482144	48
2.875	2.879	.437	S	*411940	41
2.875	2.879	.437	S	*471940	47
2.875	2.879	.468	S	*410295	41
2.875	2.879	.468	N	*410295N	41
2.875	2.879	.468	S	*450295	45
2.875	2.879	.468	S	*480295	48
2.875	2.879	.687	S	210295	21
2.996	**3.001**	**.375**	**S**	**473460**	**47**
2.996	3.001	.437	S	*452006	45
2.996	3.001	.500	S	*450145	45
2.996	3.001	.500	S	*480145	48
3.000	**3.005**	**.312**	**S**	**472394**	**47**
3.000	3.005	.312	S	*482394	48
3.000	3.005	.500	S	*410300	41
3.000	3.005	.500	S	*450300	45
3.000	3.005	.500	S	*470300	47
3.000	3.005	.500	S	*480300	48
3.061	**3.066**	**.375**	**S**	**473461**	**47**
3.061	3.066	.500	S	*450306	45
3.061	3.066	.500	S	*480306	48
3.125	**3.130**	**.375**	**S**	**471391**	**47**
3.125	3.130	.500	S	*410309	41
3.125	3.130	.500	S	*450309	45
3.125	3.130	.500	S	*470309	47
3.125	3.130	.500	S	*480309	48
3.155	3.160	.250	S	*40526S	4S
3.189	3.194	.250	S	40094S	4S
3.189	**3.194**	**.375**	**S**	**473462**	**47**
3.189	3.194	.437	S	*410094	41
3.189	3.194	.437	S	450094	45
3.189	3.194	.437	N	450094N	45
3.189	3.194	.437	S	470094	47
3.189	3.194	.437	S	*480094	48
3.350	3.355	.468	S	*410965	41
3.350	3.355	.468	S	450965	45
3.381	3.376	.667	S	*8398	39
3.500	3.505	.250	S	45653S	4S
3.543	**3.548**	**.375**	**S**	**417474**	**41**
3.543	3.548	.500	S	*415130	41
3.543	3.548	.500	S	*455130	45
3.622	3.627	.375	F	6074	29
3.623	3.628	.468	S	476509	47
3.751	3.756	.500	S	456057	45
3.930	3.935	.320	S	710081	#
1.938" SHAFT					
2.680	.000	.500	N	710928	#
1.940" SHAFT					
–	–	–	S	800500	VRS1
–	–	–	V	800504	VRS1
–	–	–	V	800505	VRS2
–	**–**	**.563**		**99193**	**Redi-Sleeve**
2.500	2.505	.250	S	*3447&	286
2.500	2.505	.250	S	6815&	286
2.622	2.626	.580	S	5121	281
2.762	2.766	.500	S	2043	47
2.812	2.816	.400	S	*3513	#
2.813	2.817	.428	S	8622&	#

For Illustration and Material Data See Technical Section

Designed For A Specific Application - Not Recommended For General Use ➡ Hydrodynamic Lip Design-CW ⬅➡ Hydrodynamic Lip Design-Bidirectional & Flanged O.D.

* The U.S. customer service number is 877-4-TIMKEN. The Canadian customer service numbers are 800-565-4927 (English) and 800-565-0438 (French-Canadian). ★ Metric Seal

Hsg. Bore	Seal O.D.	Seal Width	Lip Mat'l	Part No.	Type/ Illus.
1.940" SHAFT (cont.)					
2.900	2.910	.400	S	710281	74
2.909	2.914	.520	S	3896➡	76
1.945" SHAFT					
–	–	–	S	800500	VRS1
–	–	–	V	800504	VRS1
–	–	–	V	800505	VRS2
2.891	2.895	.290	S	200371	200
1.956" SHAFT					
–	–	–	S	800500	VRS1
–	–	–	V	800504	VRS1
–	–	–	V	800505	VRS2
2.963	2.968	.250	S	*41081S	4S
1.961" SHAFT					
–	–	–	S	800500	VRS1
–	–	–	V	800504	VRS1
–	–	–	V	800505	VRS2
3.543	3.548	.375	S	*477410	47
1.968" SHAFT					
–	–	–	S	800500	VRS1
–	–	–	V	800504	VRS1
–	–	–	V	800505	VRS2
–	**–**	**.551**		**99196**	**Redi-Sleeve**
2.623	2.627	.312	S	473814	47
2.686	2.690	.370	H	7751H	33
2.686	**2.690**	**.500**	**S**	**450472**	**45**
2.742	2.746	.500	S	450911	45
2.742	**2.746**	**.500**	**N**	**450911N**	**45**
2.875	**2.879**	**.468**	**S**	**450474**	**45**
2.960	2.964	.250	S	40370S	4S
2.996	3.001	.500	L	50528	5L
3.350	3.355	.468	S	450111	45
3.371	3.376	.468	S	*450497	45
4.003	4.008	.437	V	*477673V	47
50,00mm (1.969") SHAFT					
–	–	–	S	800500	VRS1
–	–	–	V	800504	VRS1
–	–	–	V	800505	VRS2
–	**–**	**.551**		**99196**	**Redi-Sleeve**
59,75	*60,00*	*8,00*	*S*	*50X60X8★	32
2.352	2.362	.315			
59,75	*60,00*	*10,00*	*S*	*50X60X10★	32
2.352	2.362	.394			
60,00	*60,25*	*6,00*	*S*	710192★	32
2.362	2.372	.236			
61,75	*62,00*	*9,00*	*S*	*50X62X9★	32
2.431	2.441	.354			
61,75	*62,00*	*10,00*	*S*	*50X62X10★	32
2.431	2.441	.394			
62,00	*62,08*	*6,00*	*S*	*331356★	33
2.441	2.444	.236			
62,00	*62,10*	*9,00*	*S*	225008★	47
2.441	2.445	.354			
62,00	*62,28*	*7,00*	*S*	50X62X7★	32
2.441	2.452	.276			
62,00	*62,28*	*7,00*	*S*	225005★	32
2.441	2.452	.276			
62,75	*63,00*	*8,00*	*S*	*50X63X8★	32
2.470	2.480	.315			
63,75	*64,00*	*8,00*	*S*	*50X64X8★	32
2.510	2.520	.315			
63,75	*64,00*	*9,00*	*S*	*50X64X9★	32
2.510	2.520	.354			
50,00mm (1.969") SHAFT (cont.)					
63,75	*64,00*	*10,00*	*S*	*50X64X10★	32
2.510	2.520	.394			
64,00	*64,10*	*6,50*	*S*	1971★	47
2.520	2.524	.256			
64,10	*64,19*	*6,50*	*S*	710098★	71
2.524	2.527	.256			
64,75	*65,00*	*9,00*	*S*	*50X65X9★	32
2.549	2.559	.354			
64,75	*65,00*	*10,00*	*S*	*50X65X10★	32
2.549	2.559	.394			
65,00	*65,10*	*14,00*	*S*	3743★	66
2.559	2.563	.551			
65,00	*65,28*	*8,00*	*S*	225010★	47
2.559	2.565	.315			
65,00	*65,15*	*8,00*	*S*	*470856★	47
2.559	2.565	.315			
65,00	*65,20*	*8,00*	*V*	*50X65X8V★	32
2.559	2.567	.315			
65,00	*65,20*	*8,00*	*N*	710354★➡	32
2.559	2.567	.315			
65,00	*65,28*	*8,00*	*S*	50X65X8★	32
2.559	2.570	.315			
65,00	*65,33*	*8,50*	*S*	1209★	35
2.559	2.572	.335			
65,30	*65,53*	*8,00*	*S*	710226★	32
2.571	2.580	.315			
65,30	*65,60*	*8,00*	*S*	710529★	#
2.571	2.583	.315			
65,75	*66,00*	*6,00*	*S*	*50X66X6★	32
2.588	2.598	.236			
66,00	*66,22*	*8,00*	*V*	*473810V★	47
2.598	2.607	.315			
66,50	*0,00*	*15,50*	*S*	229522★	40
2.618	.000	.610			
66,50	*66,62*	*9,52*	*S*	474134★	47
2.618	2.623	.375			
66,75	*67,00*	*9,00*	*S*	*50X67X9★	32
2.628	2.638	.354			
66,75	*67,00*	*10,00*	*S*	*50X67X10★	32
2.628	2.638	.394			
67,00	*67,20*	*9,00*	*S*	710357★	47
2.638	2.646	.354			
67,00	*67,27*	*11,00*	*S*	1974★	97
2.638	2.648	.433			
67,75	*68,00*	*7,00*	*S*	*50X68X7★	32
2.667	2.677	.276			
67,75	*68,00*	*9,00*	*S*	*50X68X9★	32
2.667	2.677	.354			
67,75	*68,00*	*10,00*	*S*	*50X68X10★	32
2.667	2.677	.394			
68,00	*68,15*	*8,00*	*V*	*483738V★	48
2.677	2.683	.315			
68,00	*68,20*	*8,00*	*V*	*50X68X8V★	32
2.677	2.685	.315			
68,00	*68,20*	*9,00*	*S*	710420★➡	32
2.677	2.685	.354			
68,00	*68,27*	*7,00*	*S*	710194★	32
2.677	2.688	.276			
68,00	*68,28*	*8,00*	*S*	50X68X8★	35
2.677	2.688	.315			
68,00	*68,28*	*8,00*	*S*	1948★	35
2.677	2.688	.315			
68,00	*68,28*	*8,00*	*S*	*353676★	35
2.677	2.688	.315			
68,00	*68,28*	*9,00*	*V*	225020★➡	32
2.677	2.688	.354			
69,75	*70,00*	*10,00*	*S*	*50X70X10★	32
2.746	2.756	.394			
69,75	*70,00*	*12,00*	*S*	*50X70X12★	32
2.746	2.756	.472			
69,75	*70,00*	*13,00*	*S*	*50X70X13★	32
2.746	2.756	.512			

For Illustration and Material Data See Technical Section
Designed For A Specific Application - Not Recommended For General Use ➡ Hydrodynamic Lip Design-CW
* The U.S. customer service number is 877-4-TIMKEN. The Canadian customer service numbers are 800-565-4927 (English) and 800-565-0438 (French-Canadian). ★ Metric Seal

50,00mm (1.969") SHAFT (cont.)

Hsg. Bore	Seal O.D.	Seal Width	Lip Mat'l	Part No.	Type/ Illus.
70,00	70,10	7,00	S	413818★	41
2.756	2.760	.276			
70,00	70,10	9,00	S	∗470824★	47
2.756	2.760	.354			
70,00	70,10	11,00	H	∗481371H★	48
2.756	2.760	.433			
70,00	70,20	8,00	S	50X70X8★	32
2.756	2.764	.315			
70,00	70,20	9,00	S	50X70X9★	32
2.756	2.764	.354			
70,00	70,20	10,00	V	∗50X70X10V★	35
2.756	2.764	.394			
70,00	70,20	10,00	N	710173★	#
2.756	2.764	.394			
70,00	70,20	14,00	S	710135★	#
2.756	2.764	.551			
70,00	70,23	9,00	S	1960★	47
2.756	2.765	.354			
70,00	70,30	9,50	S	∗1189★	32
2.756	2.768	.374			
71,75	72,00	7,00	S	∗50X72X7★	32
2.825	2.835	.276			
71,75	72,00	9,00	S	∗50X72X9★	32
2.825	2.835	.354			
71,75	72,00	10,00	S	∗50X72X10★	32
2.825	2.835	.394			
71,75	72,00	12,00	S	∗50X72X12★	32
2.825	2.835	.472			
72,00	72,20	8,00	V	∗50X72X8V★	32
2.835	2.843	.315			
72,00	72,20	10,00	S	710398★	#
2.835	2.843	.394			
72,00	72,28	8,00	S	225030★	35
2.835	2.846	.315			
72,00	72,28	8,00	S	50X72X8★	32
2.835	2.846	.315			
72,00	72,35	10,00	S	225035★	32
2.835	2.848	.394			
72,00	72,35	12,00	S	225040★➡	32
2.835	2.848	.472			
72,75	73,00	9,00	S	∗50X73X9★	32
2.864	2.874	.354			
74,00	74,20	9,00	S	710137★	#
2.913	2.921	.354			
74,75	75,00	10,00	S	∗50X75X10★	32
2.943	2.953	.394			
75,00	75,10	9,00	S	710437★	47
2.953	2.957	.354			
75,00	**75,20**	**7,00**	**S**	**50X75X7★**	**32**
2.953	**2.961**	**.276**			
75,00	75,20	8,00	S	∗50X75X8★	32
2.953	2.961	.315			
75,00	75,28	12,00	S	50X75X12★	32
2.953	2.964	.472			
75,75	76,00	12,00	S	∗50X76X12★	32
2.982	2.992	.472			
77,50	77,70	9,00	S	1941★	47
3.051	3.071	.354			
77,72	78,00	12,00	S	∗50X78X12★	32
3.060	3.071	.472			
78,00	78,20	8,00	S	∗50X78X8★	32
3.071	3.079	.315			
79,72	80,00	10,00	S	∗50X80X10★	32
3.139	3.150	.394			
79,72	80,00	12,00	S	∗50X80X12★	32
3.139	3.150	.472			
79,72	80,00	13,00	S	∗50X80X13★	32
3.139	3.150	.512			
80,00	80,20	8,00	V	∗50X80X8V★	32
3.150	3.157	.315			
80,00	80,28	8,00	S	225050★	35
3.150	3.161	.315			

50,00mm (1.969") SHAFT (cont.)

Hsg. Bore	Seal O.D.	Seal Width	Lip Mat'l	Part No.	Type/ Illus.
80,00	80,28	8,00	S	50X80X8★	32
3.150	3.161	.315			
80,00	80,30	16,00	N	710112★⬅➡	#
3.150	3.161	.630			
80,72	81,00	12,00	S	∗50X81X12★	32
3.178	3.189	.472			
81,72	82,00	12,00	S	∗50X82X12★	32
3.217	3.228	.472			
82,00	82,18	11,50	S	225082★	#
3.228	3.235	.453			
84,72	85,00	10,00	S	∗50X85X10★	32
3.335	3.346	.394			
84,72	85,00	12,00	S	∗50X85X12★	32
3.335	3.346	.472			
85,00	85,20	8,00	S	50X85X8★	32
3.346	3.354	.315			
86,00	86,30	13,00	N	710117★	#
3.386	3.398	.512			
88,00	88,20	8,00	S	∗50X88X8★	32
3.465	3.472	.315			
89,72	90,00	13,00	S	∗50X90X13★	32
3.532	3.543	.512			
90,00	**90,20**	**8,00**	**S**	**50X90X8★**	**32**
3.543	**3.551**	**.315**			
90,00	90,20	10,00	V	∗50X90X10V★	35
3.543	3.551	.394			
90,00	90,28	10,00	S	50X90X10★	35
3.543	3.554	.394			
94,00	94,28	24,00	S	710071★	#
3.701	3.712	.945			
99,72	100,00	10,00	S	∗50X100X10★	32
3.926	3.937	.394			
110,00	110,13	9,50	S	476512★	47
4.331	4.336	.374			

1.991" SHAFT

2.900	2.975	.290	S	200885%	200E

1.996" SHAFT

–	–	–	S	800500	VRS1
–	–	–	V	800504	VRS1
–	–	–	V	800505	VRS2
2.000	2.878	.250	S	8998%	44
2.743	2.751	.325	H	3404➡	75
2.996	3.001	.812	S	∗392077	#
3.111	3.120	.344	H	4189H&	75

2.000" SHAFT

–	–	–	S	800500	VRS1
–	–	–	V	800504	VRS1
–	–	–	V	800505	VRS2
–	**–**	**.563**		**99199**	**Redi-Sleeve**
–	**–**	**.875**		**99200**	**Redi-Sleeve**
–	4.562	.562	F	∗6469	#
2.500	–	.250	U	710025	#
2.500	–	.375	U	710040	#
2.500	2.504	.437	H	452261H	45
2.501	2.506	.250	L	40401	4L
2.502	2.506	.500	L	∗50401	5L
2.502	**2.508**	**.250**	**S**	**352541**	**35**
2.561	2.565	.250	S	4739	282
2.561	2.565	.549	S	9015S	44
2.561	2.566	.220	S	∗3633	#
2.562	2.566	.220	S	8871&	286
2.562	2.566	.225	S	∗4195	#
2.562	2.566	.500	F	∗205058	205
2.562	2.566	.528	N	331301N	33
2.623	2.626	.580	S	∗2834	#

For Illustration and Material Data See Technical Section
Designed For A Specific Application - Not Recommended For General Use ➡ Hydrodynamic Lip Design-CW ⬅➡ Hydrodynamic Lip Design-Bidirectional % External Bore
& Flanged O.D. ∗ The U.S. customer service number is 877-4-TIMKEN. The Canadian customer service numbers are 800-565-4927 (English) and 800-565-0438 (French-Canadian).
★ Metric Seal

2.000" SHAFT (cont.)

Hsg. Bore	Seal O.D.	Seal Width	Lip Mat'l	Part No.	Type/ Illus.
2.623	2.627	.225	S	*41424S	4S
2.623	2.627	.250	S	40410S	4S
2.623	2.627	.250	S	*492702	49
2.623	2.627	.256	V	710263➡	47
2.623	2.627	.280	S	4148&	286
2.623	**2.627**	**.312**	**S**	**471424**	**47**
2.623	2.627	.312	A	471424A	47
2.623	**2.627**	**.312**	**V**	**471424V**	**47**
2.623	2.627	.312	S	*481424	48
2.623	2.627	.312	H	*481424H	48
2.623	2.627	.375	S	*472331	47
2.623	2.627	.500	S	*410410	41
2.623	2.627	.500	S	*450410	45
2.623	2.627	.500	N	*450410N	45
2.623	2.627	.500	S	*470410	47
2.623	2.627	.500	S	*480410	48
2.623	2.627	.500	N	*480410N	48
2.623	2.627	.635	S	*5125&	#
2.625	2.629	.250	S	*440905	44
2.625	2.629	.285	S	9406S	279
2.625	2.630	.375	H	*472857H	47
2.630	2.750	.562	S	6090S	273
2.635	2.639	.235	F	292594	29
2.651	4.562	.562	F	*6465B++	#
2.686	2.690	.250	S	40360S	4S
2.686	**2.690**	**.375**	**S**	**471870**	**47**
2.686	2.690	.375	S	*482485	48
2.686	2.690	.437	S	*411883	41
2.686	2.690	.437	H	*411883H	41
2.686	2.690	.437	S	*451883	45
2.686	2.690	.437	H	*451883H	45
2.686	2.690	.437	S	471883	47
2.686	2.690	.500	S	*410360	41
2.686	2.690	.500	S	*450360	45
2.686	2.690	.500	H	*450360H	45
2.686	2.690	.500	S	*470360	47
2.686	2.690	.500	S	*480360	48
2.687	2.690	.375	U	710017	#
2.713	**2.717**	**.468**	**S**	**450446**	**45**
2.716	2.720	.468	S	*410543	41
2.716	2.720	.468	S	*450543	45
2.716	2.720	.468	H	*450543H	45
2.716	2.720	.468	V	450543V	45
2.716	2.720	.468	S	470543	47
2.716	2.720	.593	S	*10543S	1S
2.716	**2.721**	**.375**	**S**	**474272**	**47**
2.717	2.721	.250	S	43073S	4S
2.720	–	.210	S	710365%	#
2.742	2.746	.375	S	472341	47
2.742	2.746	.375	N	*472341N	47
2.745	2.749	.230	S	*4403	#
2.745	2.749	.230	S	5113	203
2.746	2.750	.375	S	*331107	33
2.746	2.750	.375	H	*331107H	33
2.746	**2.750**	**.375**	**H**	**331107N**	**33**
2.750	2.754	.187	L	5865	4L
2.750	2.754	.250	S	40389S	4S
2.750	2.754	.312	V	472492V	47
2.750	**2.754**	**.312**	**S**	**472492**	**47**
2.750	2.754	.312	A	472492A	47
2.750	2.754	.312	N	*472492N	47
2.750	2.754	.312	S	*482492	48
2.750	2.754	.325	N	710447	47
2.750	2.754	.375	S	*480436	48
2.750	2.754	.500	S	*410389	41
2.750	2.754	.500	N	*410389N	41
2.750	2.754	.500	S	450389	45
2.750	2.754	.500	H	*450389H	45
2.750	2.754	.500	S	*470389	47
2.750	2.754	.500	N	*470389N	47
2.750	2.754	.500	S	*480389	48
2.804	2.824	.294	S	200881%	200E

2.000" SHAFT (cont.)

Hsg. Bore	Seal O.D.	Seal Width	Lip Mat'l	Part No.	Type/ Illus.
2.835	**2.839**	**.375**	**S**	**472653**	**47**
2.835	2.839	.375	V	472653V	47
2.835	2.839	.468	S	*411943	41
2.835	2.839	.468	S	*451943	45
2.835	2.839	.468	S	*471943	47
2.846	2.850	.375	S	493524	49
2.875	2.879	.250	S	*42999S	4S
2.875	2.879	.290	S	200339	200
2.875	2.879	.312	V	472924V	47
2.875	**2.879**	**.312**	**S**	**472924**	**47**
2.875	2.879	.312	S	*482924	48
2.875	2.879	.437	S	*411944	41
2.875	2.879	.437	S	*451944	45
2.875	2.879	.437	H	*451944H	45
2.875	2.879	.437	S	*471944	47
2.875	2.879	.437	S	*481944	48
2.875	2.879	.468	S	*410083	41
2.875	2.879	.468	N	*410083N	41
2.875	2.879	.468	S	450083	45
2.875	2.879	.468	S	*480083	48
2.875	2.879	.500	S	*410966	41
2.875	2.879	.500	S	*450966	45
2.875	2.879	.508	H	*8836H	37
2.875	2.879	.703	S	6163S	21
2.878	2.882	.340	N	4598➡	83
2.880	**2.884**	**.375**	**S**	**472082**	**47**
2.880	2.884	.375	N	*472082N	47
2.880	2.884	.500	N	*411429N	41
2.961	2.971	.250	F	8139	#
2.964	2.968	.500	F	205044	205
2.995	3.003	.438	N	*4654N⬅	#
2.996	3.001	.250	S	40085S	4S
2.996	3.001	.250	S	*43085S	4S
2.996	3.001	.375	V	470530V	47
2.996	3.001	.375	S	*410530	41
2.996	3.001	.375	N	*410530N	41
2.996	**3.001**	**.375**	**S**	**470530**	**47**
2.996	3.001	.437	S	*412008	41
2.996	3.001	.437	S	*452008	45
2.996	3.001	.437	S	*472008	47
2.996	3.001	.500	S	410085	41
2.996	3.001	.500	H	*410085H	41
2.996	3.001	.500	N	410085N	41
2.996	3.001	.500	V	*410085V	41
2.996	3.001	.500	S	450085	45
2.996	3.001	.500	N	*450085N	45
2.996	3.001	.500	V	*450085V	45
2.996	3.001	.500	S	*470085	47
2.996	3.001	.500	H	*470085H	47
2.996	3.001	.500	N	*470085N	47
2.996	3.001	.500	S	*480085	48
2.996	3.003	.438	N	714654⬅	47
3.000	3.005	.250	S	40301S	4S
3.000	3.005	.312	V	472397V	47
3.000	**3.005**	**.312**	**S**	**472397**	**47**
3.000	3.005	.312	S	*482397	48
3.000	3.005	.375	S	*452009	45
3.000	3.005	.375	S	*472009	47
3.000	3.005	.375	N	*472009N	47
3.000	3.005	.375	S	*482009	48
3.000	3.005	.500	S	*410301	41
3.000	3.005	.500	V	*410301V	41
3.000	3.005	.500	S	450301	45
3.000	3.005	.500	H	*450301H	45
3.000	3.005	.500	N	*450301N	45
3.000	3.005	.500	S	*470301	47
3.000	3.005	.500	S	*480301	48
3.000	3.005	.500	H	*480301H	48
3.062	3.066	.250	S	204508	204
3.062	**3.066**	**.375**	**S**	**473463**	**47**
3.062	3.066	.500	S	*411091	41
3.062	3.066	.500	S	*451091	45

For Illustration and Material Data See Technical Section
Designed For A Specific Application - Not Recommended For General Use ➡ Hydrodynamic Lip Design-CW ⬅ Hydrodynamic Lip Design-CCW ++ Not Sold Separately
% External Bore & Flanged O.D.
* The U.S. customer service number is 877-4-TIMKEN. The Canadian customer service numbers are 800-565-4927 (English) and 800-565-0438 (French-Canadian).

Hsg. Bore	Seal O.D.	Seal Width	Lip Mat'l	Part No.	Type/ Illus.
2.000" SHAFT (cont.)					
3.062	3.066	.500	S	*471091	47
3.062	3.066	.500	N	*471091N	47
3.062	3.066	.500	S	*481091	48
3.062	3.066	.500	H	*481091H	48
3.125	**3.130**	**.312**	**S**	**473242**	**47**
3.125	3.130	.312	V	*473242V	47
3.125	3.130	.312	S	*483242	48
3.125	3.130	.375	S	*472010	47
3.125	3.130	.375	S	*482010	48
3.125	3.130	.500	S	*410310	41
3.125	3.130	.500	H	*410310H	41
3.125	3.130	.500	S	*450310	45
3.125	3.130	.500	N	*450310N	45
3.125	3.130	.500	S	*470310	47
3.125	3.130	.500	S	*480310	48
3.148	3.153	.250	S	*43670	4S
3.150	**3.155**	**.375**	**S**	**412725**	**41**
3.150	3.155	.500	S	*51265S	5S
3.155	3.160	.500	F	*293280	29
3.189	**3.194**	**.375**	**S**	**473464**	**47**
3.189	3.194	.437	S	*410095	41
3.189	3.194	.437	S	450095	45
3.189	3.194	.437	N	*450095N	45
3.189	3.194	.437	S	*470095	47
3.189	3.194	.437	S	*480095	48
3.251	**3.256**	**.437**	**S**	**412027**	**41**
3.251	3.256	.500	S	*410571	41
3.251	3.256	.500	S	*450571	45
3.251	3.256	.500	S	*480571	48
3.264	3.269	.250	S	441148	44
3.264	3.269	.312	F	*291148	29
3.350	**3.355**	**.468**	**S**	**412028**	**41**
3.370	–	1.020	S	710007	#
3.371	**3.376**	**.468**	**S**	**410102**	**41**
3.371	3.376	.468	N	*410102N	41
3.371	3.376	.468	S	*450102	45
3.371	3.376	.468	H	*450102H	45
3.371	3.376	.468	N	*470102N	47
3.371	3.376	.468	S	*480102	48
3.500	**3.505**	**.500**	**S**	**415627**	**41**
3.543	**3.548**	**.500**	**S**	**455253**	**45**
3.623	3.628	.250	S	204506	204
3.623	3.628	.375	S	487945	48
3.623	3.628	.500	S	*457097	45
4.003	4.008	.468	L	55524	5L
2.005" SHAFT					
–	–	–	S	800500	VRS1
–	–	–	V	800504	VRS1
–	–	–	V	800505	VRS2
2.878	2.888	.340	V	320259➡	32
51,00mm (2.008") SHAFT					
–	–	–	S	800500	VRS1
–	–	–	V	800504	VRS1
–	–	–	V	800505	VRS2
62,00	*62,10*	*7,00*	*S*	710407★	33
2.441	2.445	.276			
63,00	*63,12*	*6,00*	*S*	494123★	49
2.480	2.485	.236			
63,00	*63,20*	*8,00*	*S*	*51X63X8★	32
2.480	2.488	.315			
63,00	*63,20*	*8,50*	*S*	710323★	49
2.480	2.488	.335			
64,75	*65,00*	*13,00*	*S*	*51X65X13★	32
2.549	2.559	.512			
65,00	*65,10*	*7,00*	*S*	51X65X7★	47
2.559	2.563	.276			
65,00	*65,10*	*7,00*	*S*	225110★	47
2.559	2.563	.276			
51,00mm (2.008") SHAFT (cont.)					
65,00	*65,10*	*7,00*	*S*	*474096★	47
2.559	2.563	.276			
66,00	*66,20*	*6,50*	*N*	710265★	35
2.598	2.606	.256			
66,25	*66,50*	*10,00*	*S*	*51X66.5X10★	32
2.608	2.618	.394			
70,00	*70,28*	*11,00*	*N*	8316★➡	32
2.756	2.767	.433			
73,00	*73,20*	*8,00*	*S*	*51X73X8★	32
2.874	2.882	.315			
80,00	*80,20*	*8,00*	*S*	*51X80X8★	32
3.150	3.157	.315			
81,00	*81,20*	*8,00*	*S*	*51X81X8★	32
3.189	3.197	.315			
90,00	*90,20*	*8,00*	*S*	*51X90X8★	32
3.543	3.551	.315			
92,00	*92,20*	*8,00*	*S*	*51X92X8★	32
3.622	3.630	.315			
2.010" SHAFT					
–	–	–	S	800500	VRS1
–	–	–	V	800504	VRS1
–	–	–	V	800505	VRS2
–	2.876	.318	S	*SK2++	#
2.650	2.655	.363	S	3794	49
2.030" SHAFT					
–	–	–	S	800500	VRS1
–	–	–	V	800504	VRS1
–	–	–	V	800505	VRS2
–	2.601	.295	S	*SK1++	#
2.031" (2-1/32") SHAFT					
–	–	–	S	800500	VRS1
–	–	–	V	800504	VRS1
–	–	–	V	800505	VRS2
–	4.156	.781	L	5797	#
52,00mm (2.047") SHAFT					
–	–	–	S	800500	VRS1
–	–	–	V	800504	VRS1
–	–	–	V	800505	VRS2
–	**–**	**.500**		**99204**	**Redi-Sleeve**
0,00	*69,01*	*14,81*	*S*	710527★	#
.000	2.717	.583			
61,75	*62,00*	*7,00*	*S*	*52X62X7★	32
2.431	2.441	.276			
61,75	*62,00*	*10,00*	*S*	*52X62X10★	32
2.431	2.441	.394			
62,00	*63,00*	*5,50*	*S*	710253★%	#
2.441	2.480	.217			
62,75	*63,00*	*8,00*	*S*	*52X63X8★	32
2.470	2.480	.315			
63,00	*63,23*	*8,00*	*S*	1975★	32
2.480	2.489	.315			
63,75	*64,00*	*9,00*	*S*	*52X64X9★	32
2.510	2.520	.354			
64,75	*65,00*	*8,00*	*S*	*52X65X8★	32
2.549	2.559	.315			
64,75	*65,00*	*10,00*	*S*	*52X65X10★	32
2.549	2.559	.394			
65,00	*65,20*	*9,00*	*S*	225208★	32
2.559	2.567	.354			
65,00	*65,30*	*9,00*	*S*	52X65X9★	32
2.559	2.571	.354			
65,00	*65,30*	*9,00*	*S*	1955★	35
2.559	2.571	.354			

For Illustration and Material Data See Technical Section
Designed For A Specific Application - Not Recommended For General Use ➡ Hydrodynamic Lip Design-CW ++ Not Sold Separately % External Bore
* The U.S. customer service number is 877-4-TIMKEN. The Canadian customer service numbers are 800-565-4927 (English) and 800-565-0438 (French-Canadian). ★ Metric Seal

52,00mm (2.047") SHAFT (cont.)

Hsg. Bore	Seal O.D.	Seal Width	Lip Mat'l	Part No.	Type/ Illus.
66,00	*66,12*	*7,50*	*S*	4898★	66
2.598	2.603	.295			
66,00	*66,23*	*9,00*	*N*	225210★	35
2.598	2.607	.354			
67,00	*67,30*	*7,00*	*S*	1883★%	#
2.638	2.650	.276			
67,75	*68,00*	*7,00*	*S*	*52X68X7★	32
2.667	2.677	.276			
67,75	*68,00*	*10,00*	*S*	*52X68X10★	32
2.667	2.677	.394			
68,00	*68,10*	*6,50*	*S*	710292★	#
2.677	2.681	.256			
68,00	*68,09*	*12,09*	*S*	*710064★	#
2.677	2.681	.476			
68,00	*68,15*	*8,00*	*V*	710190★	32
2.677	2.683	.315			
68,00	*68,20*	*8,00*	*V*	*52X68X8V★	35
2.677	2.685	.315			
68,00	*68,20*	*13,00*	*S*	710312★	32
2.677	2.685	.512			
68,00	*68,28*	*7,00*	*S*	4990★	281
2.677	2.688	.276			
68,00	*68,28*	*8,00*	*S*	225220★	32
2.677	2.688	.315			
68,00	*68,28*	*8,00*	*S*	52X68X8★	32
2.677	2.688	.315			
68,00	*68,28*	*10,00*	*S*	1884★	32
2.677	2.688	.394			
68,00	*68,43*	*10,00*	*S*	*324186★	32
2.677	2.694	.394			
69,00	*69,28*	*10,00*	*S*	52X69X10★	35
2.717	2.728	.394			
69,75	*70,00*	*9,00*	*S*	*52X70X9★	32
2.746	2.756	.354			
69,75	*70,00*	*13,00*	*S*	*52X70X13★	32
2.746	2.756	.512			
70,00	*70,20*	*8,00*	*S*	52X70X8★	32
2.756	2.764	.315			
70,00	*70,27*	*8,50*	*N*	710187★➡	32
2.756	2.766	.335			
70,00	*70,27*	*7,50*	*S*	225540★%	#
2.756	2.767	.295			
70,00	*70,27*	*8,00*	*S*	225225★	47
2.756	2.767	.315			
71,75	*72,00*	*9,00*	*S*	*52X72X9★	32
2.825	2.835	.354			
71,75	*72,00*	*10,00*	*S*	*52X72X10★	32
2.825	2.835	.394			
71,75	*72,00*	*12,00*	*S*	*52X72X12★	32
2.825	2.835	.472			
72,00	*72,20*	*8,00*	*S*	52X72X8★	35
2.835	2.843	.315			
72,00	*72,20*	*8,00*	*V*	*52X72X8V★	32
2.835	2.843	.315			
72,00	*72,28*	*8,00*	*S*	225230★	35
2.835	2.846	.315			
72,00	*72,28*	*8,00*	*S*	*350858★	35
2.835	2.846	.315			
72,00	*72,28*	*8,00*	*N*	710242★➡	32
2.835	2.846	.315			
74,75	*75,00*	*10,00*	*S*	*52X75X10★	32
2.943	2.953	.394			
75,00	*75,11*	*7,50*	*S*	225275★	66
2.953	2.957	.295			
75,00	*75,28*	*12,00*	*S*	52X75X12★	32
2.953	2.964	.472			
77,00	*78,00*	*9,00*	*S*	710107★%	#
3.031	3.071	.354			
77,72	*78,00*	*10,00*	*S*	*52X78X10★	32
3.060	3.071	.394			
78,00	*78,28*	*9,00*	*N*	225278★	35
3.071	3.082	.354			

52,00mm (2.047") SHAFT (cont.)

Hsg. Bore	Seal O.D.	Seal Width	Lip Mat'l	Part No.	Type/ Illus.
79,72	*80,00*	*13,00*	*S*	*52X80X13★	32
3.139	3.150	.512			
80,00	*80,28*	*10,00*	*S*	52X80X10★⬅➡	32
3.150	3.161	.394			
82,00	*82,20*	*8,00*	*S*	52X82X8★	32
3.228	3.236	.315			
84,72	*85,00*	*9,00*	*S*	*52X85X9★	32
3.335	3.346	.354			
84,72	*85,00*	*10,00*	*S*	*52X85X10★	32
3.335	3.346	.394			
85,00	*85,20*	*8,00*	*S*	52X85X7★	32
3.346	3.354	.315			
85,00	*85,20*	*8,00*	*S*	*52X85X8★	32
3.346	3.354	.315			
89,72	*90,00*	*10,00*	*S*	*52X90X10★	32
3.532	3.543	.394			

2.048" SHAFT

–	–	–	S	800500	VRS1
–	–	–	V	800504	VRS1
–	–	–	V	800505	VRS2
2.728	2.732	.590	S	3087	#

2.058" SHAFT

–	–	–	S	800500	VRS1
–	–	–	V	800504	VRS1
–	–	–	V	800505	VRS2
-	**-**	**.781**		**99205**	**Redi-Sleeve**
2.062	3.325	.290	S	*200897%	200E
2.676	2.681	.255	S	*7141	200
3.149	3.154	.270	S	200110	200

2.062" (2-1/16") SHAFT

–	–	–	S	800500	VRS1
–	–	–	V	800504	VRS1
–	–	–	V	800505	VRS2
-	**-**	**.781**		**99205**	**Redi-Sleeve**
–	4.735	.468	S	6077	#
2.561	2.565	.312	S	332134	33
2.561	2.565	.313	V	484064V	48
2.758	2.762	.437	S	*451945	45
2.842	2.846	.450	L	5877	5L
2.875	2.879	.375	S	*472579	47
2.875	**2.879**	**.437**	**S**	**451948**	**45**
2.875	2.879	.468	S	*450373	45
2.875	2.879	.468	S	*480373	48
2.875	2.879	.500	F	*291070	29
2.937	3.034	.340	S	4162%	200E
2.996	**3.001**	**.375**	**S**	**473466**	**47**
2.996	3.001	.500	S	*410261	41
2.996	3.001	.500	S	*450261	45
2.996	3.001	.500	S	*480261	48
3.000	3.005	.310	S	6954S	44
3.000	3.005	.375	V	2822V	41
3.000	3.005	.375	S	*412012	41
3.000	**3.005**	**.375**	**S**	**472012**	**47**
3.000	3.005	.375	S	*482012	48
3.000	3.005	.437	N	412798N	41
3.000	3.005	.500	S	*450302	45
3.000	3.005	.500	H	*450302H	45
3.000	3.005	.500	S	*480302	48
3.061	**3.066**	**.500**	**S**	**450307**	**45**
3.061	3.066	.500	S	*480307	48
3.125	3.130	.500	S	450311	45
3.125	3.130	.500	S	*480311	48
3.151	3.156	.240	F	5756	29
3.189	3.194	.375	S	*472928	47
3.189	3.194	.437	S	450096	45

For Illustration and Material Data See Technical Section
Designed For A Specific Application - Not Recommended For General Use ➡ Hydrodynamic Lip Design-CW ⬅➡ Hydrodynamic Lip Design-Bidirectional % External Bore
* The U.S. customer service number is 877-4-TIMKEN. The Canadian customer service numbers are 800-565-4927 (English) and 800-565-0438 (French-Canadian). ★ Metric Seal

2.062" (2-1/16") SHAFT (cont.)

Hsg. Bore	Seal O.D.	Seal Width	Lip Mat'l	Part No.	Type/ Illus.
3.189	3.194	.437	H	*450096H	45
3.189	3.194	.437	S	*480096	48
3.190	**3.194**	**.437**	**S**	**416738**	**41**
3.190	3.194	.437	H	*416738H	41
3.250	3.310	.500	S	80313%	200E
3.251	3.256	.500	S	450313	45
3.251	3.256	.500	S	*480313	48
3.350	3.355	.468	S	*450532	45
3.371	3.376	.468	S	450343	45
3.371	3.376	.468	S	*480343	48
3.623	**3.628**	**.468**	**S**	**455260**	**45**
3.623	3.628	.468	S	*485260	48

2.065" SHAFT

Hsg. Bore	Seal O.D.	Seal Width	Lip Mat'l	Part No.	Type/ Illus.
3.130	3.130	.294	S	200865%	200E

53,00mm (2.087") SHAFT

Hsg. Bore	Seal O.D.	Seal Width	Lip Mat'l	Part No.	Type/ Illus.
–	–	–	S	800500	VRS1
–	–	–	V	800504	VRS1
–	–	–	V	800505	VRS2
0,00	*71,25*	*8,99*	*S*	710522★	35
.000	2.805	.354			
67,95	*68,20*	*7,00*	*S*	*53X68.2X7★	32
2.675	2.685	.276			
68,00	*68,28*	*10,00*	*S*	53X68X10★	32
2.677	2.688	.394			
68,20	*68,48*	*7,00*	*S*	710175★	32
2.685	2.696	.276			
69,00	*69,11*	*10,30*	*F*	*205009★	205
2.717	2.721	.406			
71,75	*72,00*	*10,00*	*S*	*53X72X10★	32
2.825	2.835	.394			
72,75	*73,00*	*10,00*	*S*	*53X73X10★	32
2.864	2.874	.394			
79,72	*80,00*	*13,00*	*S*	*53X80X13★	32
3.139	3.150	.512			

2.088" SHAFT

Hsg. Bore	Seal O.D.	Seal Width	Lip Mat'l	Part No.	Type/ Illus.
.000	2.777	.500	S	710506	86
.000	2.915	.500	S	710507	71

2.093" (2-3/32") SHAFT

Hsg. Bore	Seal O.D.	Seal Width	Lip Mat'l	Part No.	Type/ Illus.
–	–	–	S	800550	VRS1
–	–	–	V	800554	VRS1
2.716	2.721	.359	S	*204078	204
2.716	2.721	.406	S	*204009	204
2.716	2.721	.406	S	6590S	204
2.716	2.725	.250	S	340900	34
2.750	2.754	.250	S	41013S	4S
2.835	2.839	.250	S	*40627S	4S
3.148	3.153	.250	S	*43070S	4S
3.150	3.156	.250	S	40973S	4S

2.116" SHAFT

Hsg. Bore	Seal O.D.	Seal Width	Lip Mat'l	Part No.	Type/ Illus.
–	–	–	S	800550	VRS1
–	–	–	V	800554	VRS1
3.189	3.194	.468	H	*472236H	47

2.121" SHAFT

Hsg. Bore	Seal O.D.	Seal Width	Lip Mat'l	Part No.	Type/ Illus.
3.296	3.296	.460	S	*9434%	46

2.125" (2-1/8") SHAFT

Hsg. Bore	Seal O.D.	Seal Width	Lip Mat'l	Part No.	Type/ Illus.
–	–	–	S	800550	VRS1
–	–	–	V	800554	VRS1
–	**–**	**.500**		**99210**	**Redi-Sleeve**

2.125" (2-1/8") SHAFT (cont.)

Hsg. Bore	Seal O.D.	Seal Width	Lip Mat'l	Part No.	Type/ Illus.
–	**–**	**.781**		**99212**	**Redi-Sleeve**
2.561	2.565	.492	S	*474069	47
2.750	**2.754**	**.375**	**S**	**473204**	**47**
2.750	2.754	.375	N	*473204N	47
2.750	**2.754**	**.500**	**H**	***9933**	**Redi-Sleeve**
2.750	2.754	.500	S	*411949	41
2.750	2.754	.500	H	*411949H	41
2.750	2.754	.500	N	*411949N	41
2.750	2.754	.500	S	*471949	47
2.750	2.754	.500	H	*471949H	47
2.750	2.754	.500	N	*471949N	47
2.758	**2.762**	**.437**	**S**	**471950**	**47**
2.758	2.762	.437	H	*471950H	47
2.758	2.762	.437	N	*471950N	47
2.835	2.839	.468	S	*410639	41
2.835	**2.839**	**.468**	**S**	**450639**	**45**
2.835	2.839	.468	S	*470639	47
2.835	2.839	.468	S	*480639	48
2.875	2.879	.250	S	40566S	4S
2.875	2.879	.250	S	*43000S	4S
2.875	2.879	.312	S	6626S	4S
2.875	2.879	.375	V	470898V	45
2.875	2.879	.375	H	6879H	33
2.875	2.879	.375	H	*330867H	33
2.875	2.879	.375	N	*450898N	45
2.875	**2.879**	**.375**	**S**	**470898**	**47**
2.875	2.879	.375	A	470898A	47
2.875	2.879	.375	N	*470898N	47
2.875	2.879	.375	S	*480898	48
2.875	2.879	.375	H	*480898H	48
2.875	2.879	.437	T	39851⬅	FW-H
2.875	2.879	.437	T	39853➡	FW-H
2.875	2.879	.437	S	*410867	41
2.875	2.879	.437	N	410867N	41
2.875	2.879	.437	V	*410867V	41
2.875	2.879	.437	S	450867	45
2.875	2.879	.437	H	*450867H	45
2.875	2.879	.437	N	*450867N	45
2.875	2.879	.437	V	*450867V	45
2.875	2.879	.437	S	*470867	47
2.875	2.879	.437	H	*470867H	47
2.875	2.879	.437	N	*470867N	47
2.875	2.879	.437	S	*480867	48
2.875	2.879	.437	N	*480867N	48
2.875	2.879	.468	S	*410365	41
2.875	2.879	.468	S	450365	45
2.875	2.879	.468	N	450365N	45
2.875	2.879	.468	V	*450365V	45
2.875	2.879	.468	S	*470365	47
2.875	2.879	.468	S	*480365	48
2.875	2.879	.500	S	*452612	45
2.875	2.879	.500	S	*482612	48
2.875	2.879	.625	L	30365	3L
2.878	2.882	.375	S	453066	45
2.878	2.884	.437	S	9599S➡	47
2.880	2.885	.550	N	2457⬅	#
2.996	**3.001**	**.375**	**S**	**473467**	**47**
2.996	3.001	.500	S	*410115	41
2.996	3.001	.500	N	*410115N	41
2.996	3.001	.500	S	450115	45
2.996	3.001	.500	N	*450115N	45
2.996	3.001	.500	S	*470115	47
2.996	3.001	.500	S	*480115	48
2.996	3.001	.687	S	8650S	1L
3.000	3.005	.312	S	8430S	49
3.000	3.005	.375	V	412015V	41
3.000	**3.005**	**.375**	**S**	**472015**	**47**
3.000	3.005	.375	N	*472015N	47
3.000	3.005	.375	V	472015V	47
3.000	3.005	.375	S	*482015	48
3.000	3.005	.375	H	*482015H	48

For Illustration and Material Data See Technical Section
Designed For A Specific Application - Not Recommended For General Use ➡ Hydrodynamic Lip Design-CW ⬅ Hydrodynamic Lip Design-CCW % External Bore
* The U.S. customer service number is 877-4-TIMKEN. The Canadian customer service numbers are 800-565-4927 (English) and 800-565-0438 (French-Canadian). ★ Metric Seal

2.125" (2-1/8") SHAFT (cont.)

Hsg. Bore	Seal O.D.	Seal Width	Lip Mat'l	Part No.	Type/ Illus.
3.000	3.005	.375	N	*482015N	48
3.000	3.005	.375	V	*482015V	48
3.000	3.005	.500	S	*410303	41
3.000	3.005	.500	N	*410303N	41
3.000	3.005	.500	S	450303	45
3.000	3.005	.500	N	*450303N	45
3.000	3.005	.500	V	*450303V	45
3.000	3.005	.500	S	*470303	47
3.000	3.005	.500	N	*470303N	47
3.000	3.005	.500	V	*470303V	47
3.000	3.005	.500	S	480303	48
3.000	3.005	.500	V	*480303V	48
3.061	3.066	.375	S	473468	47
3.061	**3.066**	**.500**	**S**	**410308**	**41**
3.061	3.066	.500	S	450308	45
3.061	3.066	.500	S	*470308	47
3.061	3.066	.500	N	470308N	47
3.061	3.066	.500	S	*480308	48
3.061	3.066	.687	L	30308	3L
3.063	3.068	.370	N	*710021	7S
3.125	3.130	.375	S	*412016	41
3.125	3.130	.375	N	*412016N	41
3.125	**3.130**	**.375**	**S**	**472016**	**47**
3.125	3.130	.375	S	*482016	48
3.125	3.130	.500	S	*2523	41
3.125	3.130	.500	S	*410312	41
3.125	3.130	.500	N	410312N	41
3.125	3.130	.500	S	450312	45
3.125	3.130	.500	N	*450312N	45
3.125	3.130	.500	S	*470312	47
3.125	3.130	.500	N	*470312N	47
3.125	3.130	.500	S	*480312	48
3.125	3.130	.500	N	*480312N	48
3.125	3.130	.593	S	*7951	41
3.126	3.131	.484	F	6389	29
3.146	3.153	.500	F	8243	#
3.149	3.154	.375	S	476535	47
3.149	3.154	.375	N	*476535N	47
3.180	3.184	.781	S	*6180	#
3.189	**3.194**	**.375**	**S**	**472409**	**47**
3.189	3.194	.375	N	*472409N	47
3.189	3.194	.375	V	*472409V	47
3.189	3.194	.437	T	39302➡	W-H
3.189	3.194	.437	T	39717➡	WW-H
3.189	3.194	.437	T	39719⬅	WW-H
3.189	3.194	.437	S	*410121	41
3.189	3.194	.437	V	*410121V	41
3.189	3.194	.437	S	450121	45
3.189	3.194	.437	N	*450121N	45
3.189	3.194	.437	V	*450121V	45
3.189	3.194	.437	S	*470121	47
3.189	3.194	.437	S	*480121	48
3.189	3.194	.468	H	*2439	47
3.193	3.198	.812	H	7790H	#
3.251	**3.256**	**.375**	**S**	**473243**	**47**
3.251	3.256	.375	S	*483243	48
3.251	3.256	.437	S	*412032	41
3.251	3.256	.437	S	*452032	45
3.251	3.256	.500	S	*410314	41
3.251	3.256	.500	S	*450314	45
3.251	3.256	.500	S	*470314	47
3.251	3.256	.500	N	*470314N	47
3.251	3.256	.500	S	*480314	48
3.350	3.355	.250	S	*40097S	4S
3.350	**3.355**	**.375**	**S**	**413469**	**41**
3.350	3.355	.375	S	*473469	47
3.350	3.355	.468	S	*50097	5S
3.350	3.355	.468	S	*410097	41
3.350	3.355	.468	N	*410097N	41
3.350	3.355	.468	V	*410097V⬅	41
3.350	3.355	.468	S	*450097	45
3.350	3.355	.468	S	*480097	48

2.125" (2-1/8") SHAFT (cont.)

Hsg. Bore	Seal O.D.	Seal Width	Lip Mat'l	Part No.	Type/ Illus.
3.350	3.355	.500	S	*456861	45
3.350	3.356	1.250	S	*483815	48
3.371	3.376	.312	S	440972	44
3.371	3.376	.375	V	413470V	41
3.371	**3.376**	**.375**	**S**	**413470**	**41**
3.371	3.376	.468	S	*410972	41
3.371	3.376	.468	N	410972N	41
3.371	3.376	.468	S	*450972	45
3.371	3.376	.468	S	*470972	47
3.371	3.376	.468	S	*480972	48
3.436	3.440	.625	F	6380	29
3.500	**3.505**	**.375**	**S**	**416267**	**41**
3.500	3.505	.375	S	*476267	47
3.500	3.505	.500	S	*415659	41
3.500	3.505	.500	S	*455659	45
3.500	3.505	.500	S	*475659	47
3.500	3.505	.500	S	*485659	48
3.501	3.505	.375	S	*456267	45
3.501	3.505	.375	S	*486267	48
3.543	3.548	.320	S	*200346	200
3.543	**3.548**	**.500**	**S**	**415349**	**41**
3.543	3.548	.500	N	*415349N	41
3.543	3.548	.500	V	*415349V	41
3.547	3.557	.375	S	*355737	35
3.623	3.628	.468	S	*415080	41
3.623	**3.628**	**.468**	**S**	**455080**	**45**
3.623	3.628	.468	N	475080N	47
3.937	3.942	.375	S	*476808	47

54,00mm (2.126") SHAFT

–	–	–	S	800550	VRS1
–	–	–	V	800554	VRS1
–	**–**	**.500**		**99210**	**Redi-Sleeve**
–	**–**	**.781**		**99212**	**Redi-Sleeve**
63,75	*64,00*	*9,00*	*S*	*54X64X9★	32
2.510	2.520	.354			
64,75	*65,00*	*10,00*	*S*	*54X65X10★	32
2.549	2.559	.394			
64,75	*65,00*	*13,00*	*S*	*54X65X13★	32
2.549	2.559	.512			
65,00	*65,20*	*8,00*	*S*	54X65X8★	32
2.559	2.567	.315			
65,00	*65,28*	*12,50*	*S*	2002★	47
2.559	2.570	.492			
66,00	*66,23*	*7,50*	*S*	225410★	#
2.598	2.607	.295			
67,75	*68,00*	*10,00*	*S*	*54X68X10★	32
2.667	2.677	.394			
69,00	*69,23*	*7,00*	*N*	710239★	40
2.717	2.726	.276			
69,75	*70,00*	*9,00*	*S*	*54X70X9★	32
2.746	2.756	.354			
72,00	*72,25*	*10,00*	*S*	54X72X10★	32
2.835	2.844	.394			
72,00	*72,25*	*10,00*	*S*	225420★	32
2.835	2.844	.394			
72,25	*72,50*	*9,00*	*S*	*54X72.5X9★	32
2.844	2.854	.354			
73,00	*73,20*	*8,00*	*S*	54X73X8★	32
2.874	2.882	.315			
73,00	*73,40*	*12,75*	*T*	712125★➡	FW-H
2.874	2.890	.502			
73,75	*74,00*	*10,00*	*S*	*54X74X10★	32
2.903	2.913	.394			
74,75	*75,00*	*10,00*	*S*	*54X75X10★	32
2.943	2.953	.394			
75,18	*75,48*	*17,00*	*S*	710073★	#
2.960	2.972	.669			
75,75	*76,00*	*8,00*	*S*	*54X76X8★	32
2.982	2.992	.315			

For Illustration and Material Data See Technical Section

Designed For A Specific Application - Not Recommended For General Use ➡ Hydrodynamic Lip Design-CW ⬅ Hydrodynamic Lip Design-CCW

* The U.S. customer service number is 877-4-TIMKEN. The Canadian customer service numbers are 800-565-4927 (English) and 800-565-0438 (French-Canadian). ★ Metric Seal

Hsg. Bore	Seal O.D.	Seal Width	Lip Mat'l	Part No.	Type/ Illus.
54,00mm (2.126") SHAFT (cont.)					
76,00	*76,20*	*14,00*	*S*	710438★	#
2.992	3.000	.551			
79,72	*80,00*	*10,00*	*S*	*54X80X10★	32
3.139	3.150	.394			
80,72	*81,00*	*10,00*	*S*	*54X81X10★	32
3.178	3.189	.394			
81,00	*81,20*	*8,00*	*S*	*54X81X8★	32
3.189	3.197	.315			
81,72	*82,00*	*11,00*	*S*	*54X82X11★	32
3.217	3.228	.433			
81,99	*82,17*	*8,00*	*S*	710203★	66
3.228	3.235	.315			
82,00	*82,30*	*10,00*	*S*	225450★	32
3.228	3.240	.394			
82,00	*82,35*	*10,00*	*S*	54X82X10★	32
3.228	3.242	.394			
85,00	*85,25*	*10,00*	*S*	225460★	32
3.346	3.356	.394			
85,00	*85,28*	*10,00*	*S*	54X85X10★	32
3.346	3.357	.394			
2.129" SHAFT					
–	–	–	S	800550	VRS1
–	–	–	V	800554	VRS1
–	**–**	**.781**		**99212**	**Redi-Sleeve**
2.762	2.766	.250	N	*6957	48
2.835	2.846	.323	T	100470	#
2.891	2.895	.250	S	42101S	4S
2.136" SHAFT					
–	–	–	S	800550	VRS1
–	–	–	V	800554	VRS1
2.902	2.909	.310	S	8312&	272
2.141" SHAFT					
–	–	–	S	800550	VRS1
–	–	–	V	800554	VRS1
3.484	3.493	.329	V	4635V	#
3.484	3.493	.329	H	*4635H➡	#
3.484	3.493	.622	H	4635	#
54,50mm (2.146") SHAFT					
69,75	*70,00*	*8,00*	*S*	*54.5X70X8★	32
2.746	2.756	.315			
2.156" (2-5/32") SHAFT					
–	–	–	S	800550	VRS1
–	–	–	V	800554	VRS1
2.875	2.879	.375	H	*482513H	48
2.880	2.885	.375	T	100058➡	W
3.189	**3.194**	**.437**	**S**	**450621**	**45**
3.189	3.194	.437	N	*450621N	45
3.251	3.256	.500	S	450869	45
2.162" SHAFT					
–	–	–	S	800550	VRS1
–	–	–	V	800554	VRS1
–	**–**	**.787**		**99215**	**Redi-Sleeve**
3.543	3.548	.375	S	*476513	47
55,00mm (2.165") SHAFT					
–	–	–	S	800550	VRS1
–	–	–	V	800554	VRS1
–	**–**	**.787**		**99215**	**Redi-Sleeve**

Hsg. Bore	Seal O.D.	Seal Width	Lip Mat'l	Part No.	Type/ Illus.
55,00mm (2.165") SHAFT (cont.)					
64,75	*65,00*	*8,00*	*S*	*55X65X8★	32
2.549	2.559	.315			
64,75	*65,00*	*10,00*	*S*	*55X65X10★	32
2.549	2.559	.394			
67,75	*68,00*	*10,00*	*S*	*55X68X10★	32
2.667	2.677	.394			
68,00	*68,20*	*8,00*	*S*	710127★	#
2.677	2.685	.315			
68,00	*68,28*	*8,00*	*S*	55X68X8★	32
2.677	2.688	.315			
68,00	*68,30*	*8,00*	*S*	225500★	32
2.677	2.689	.315			
68,53	*68,91*	*4,11*	*S*	*9471★	#
2.698	2.713	.162			
69,75	*70,00*	*9,00*	*S*	*55X70X9★	32
2.746	2.756	.354			
69,75	*70,00*	*10,00*	*S*	*55X70X10★	32
2.746	2.756	.394			
69,75	*70,00*	*12,00*	*S*	*55X70X12★	32
2.746	2.756	.472			
70,00	*70,10*	*10,26*	*S*	3723★	66
2.756	2.760	.404			
70,00	*70,20*	*8,00*	*V*	*55X70X8V★	32
2.756	2.764	.315			
70,00	*70,20*	*8,00*	*V*	710279★	32
2.756	2.764	.315			
70,00	*70,27*	*8,00*	*S*	55X70X8★	35
2.756	2.767	.315			
70,00	*70,27*	*9,00*	*S*	225505★	32
2.756	2.767	.394			
71,75	*72,00*	*9,00*	*S*	*55X72X9★	32
2.825	2.835	.354			
71,75	*72,00*	*10,00*	*S*	*55X72X10★	32
2.825	2.835	.394			
71,75	*72,00*	*12,00*	*S*	*55X72X12★	32
2.825	2.835	.472			
72,00	*72,20*	*8,00*	*V*	*55X72X8V★	32
2.835	2.843	.315			
72,00	*72,20*	*10,50*	*S*	225535★	32
2.835	2.843	.413			
72,00	*72,25*	*8,00*	*S*	225530★	35
2.835	2.844	.315			
72,00	*72,25*	*8,00*	*S*	55X72X8★	32
2.835	2.844	.315			
72,75	*73,00*	*10,00*	*S*	*55X73X10★	32
2.864	2.874	.394			
74,00	*74,10*	*9,20*	*S*	1207N★	49
2.913	2.917	.362			
74,00	*74,28*	*9,20*	*S*	1207★	49
2.913	2.924	.362			
74,75	*75,00*	*9,00*	*S*	*55X75X9★	32
2.943	2.953	.354			
74,75	*75,00*	*12,00*	*S*	*55X75X12★	32
2.943	2.953	.472			
75,00	*0,00*	*10,00*	*N*	225885★	32
2.953	.000	.394			
75,00	***75,20***	***7,00***	***S***	***55X100X7★***	**32**
2.953	**2.961**	**.276**			
75,00	*75,20*	*8,00*	*S*	55X75X8★	35
2.953	2.961	.315			
75,00	*75,20*	*10,00*	*V*	*55X75X10V★	35
2.953	2.961	.394			
75,00	*75,35*	*10,00*	*S*	55X75X10★	35
2.953	2.967	.394			
75,00	*75,35*	*10,00*	*S*	225545★	35
2.953	2.967	.394			
75,75	*76,00*	*12,00*	*S*	*55X76X12★	32
2.982	2.992	.472			
77,72	*78,00*	*9,00*	*S*	*55X78X9★	32
3.060	3.071	.354			
77,72	*78,00*	*12,00*	*S*	*55X78X12★	32
3.060	3.071	.472			

For Illustration and Material Data See Technical Section

Designed For A Specific Application - Not Recommended For General Use ➡ Hydrodynamic Lip Design-CW & Flanged O.D.

* The U.S. customer service number is 877-4-TIMKEN. The Canadian customer service numbers are 800-565-4927 (English) and 800-565-0438 (French-Canadian). ★ Metric Seal

55,00mm (2.165") SHAFT (cont.)

Hsg. Bore	Seal O.D.	Seal Width	Lip Mat'l	Part No.	Type/ Illus.
78,00	*78,28*	*10,00*	*S*	55X78X10★	32
3.071	3.082	.394			
79,72	*80,00*	*10,00*	*S*	*55X80X10★	32
3.139	3.150	.394			
79,72	*80,00*	*12,00*	*S*	*55X80X12★	32
3.139	3.150	.472			
80,00	*80,20*	*8,00*	*V*	*55X80X8V★	35
3.150	3.157	.315			
80,00	*80,28*	*8,00*	*S*	55X80X8★	32
3.150	3.161	.315			
81,72	*82,00*	*9,00*	*S*	*55X82X9★	32
3.217	3.228	.354			
82,00	*82,30*	*12,00*	*S*	55X82X12★	32
3.228	3.240	.472			
82,00	*82,30*	*10,00*	*S*	1958★	35
3.228	3.240	.472			
84,72	*85,00*	*12,00*	*S*	*55X85X12★	32
3.335	3.346	.472			
84,72	*85,00*	*14,00*	*S*	*55X85X14★	32
3.335	3.346	.551			
85,00	*85,20*	*8,00*	*S*	55X85X8★	32
3.346	3.354	.315			
85,00	*85,31*	*10,00*	*S*	55X85X10★	32
3.346	3.359	.394			
88,00	*88,20*	*8,00*	*S*	55X88X8★⬅➡	32
3.465	3.472	.315			
88,00	*88,20*	*8,00*	*S*	*55X88X10★	32
3.465	3.472	.315			
89,72	*90,00*	*8,00*	*S*	*55X90X8★	32
3.532	3.543	.315			
89,72	*90,00*	*10,00*	*S*	*55X90X10★	32
3.532	3.543	.394			
90,00	*90,27*	*8,00*	*S*	55X90X8★	32
3.543	3.554	.315			
90,00	*90,28*	*13,00*	*S*	55X90X13★	32
3.543	3.554	.512			
95,00	*95,20*	*8,00*	*S*	*55X95X8★	32
3.740	3.748	.315			
99,72	*100,00*	*10,00*	*S*	*55X100X10★	32
3.926	3.937	.394			
99,72	*100,00*	*12,00*	*S*	*55X100X12★	32
3.926	3.937	.472			
100,00	*100,30*	*12,70*	*S*	55X100X13★	45
3.937	3.949	.500			
101,68	*101,80*	*11,10*	*V*	*477674V★	47
4.003	4.008	.437			

2.172" SHAFT

–	–	–	S	800550	VRS1
–	–	–	V	800554	VRS1
2.426	3.000	.485	S	*9195S	#
3.125	3.130	.675	N	710413	#
3.345	3.350	.500	S	*482435	48

2.180" SHAFT

–	–	–	S	800550	VRS1
–	–	–	V	800554	VRS1
2.999	3.004	.250	S	4740	282
3.000	3.005	.495	S	8974S	49
3.190	3.194	.620	S	3103➡	69
3.190	3.194	.620	V	713103➡	69

2.187" (2-3/16") SHAFT

–	–	–	S	800550	VRS1
–	–	–	V	800554	VRS1
–	**–**	**.781**		**99218**	**Redi-Sleeve**
2.835	2.839	.281	S	*42127S	4S
2.835	2.839	.468	S	*411952	41
2.835	2.839	.468	S	*451952	45

2.187" (2-3/16") SHAFT (cont.)

Hsg. Bore	Seal O.D.	Seal Width	Lip Mat'l	Part No.	Type/ Illus.
2.835	**2.839**	**.468**	**S**	**471952**	**47**
2.835	2.839	.468	S	*481952	48
2.875	2.879	.375	S	*413244	41
2.875	2.879	.375	N	*413244N	41
2.875	2.879	.375	S	*453244	45
2.875	**2.879**	**.375**	**S**	**473244**	**47**
2.875	2.879	.375	S	*483244	48
2.875	2.879	.437	S	*411953	41
2.875	2.879	.437	N	*411953N	41
2.875	2.879	.437	S	*451953	45
2.875	2.879	.437	S	*471953	47
2.875	2.879	.437	S	*481953	48
2.875	2.879	.468	S	*410489	41
2.875	2.879	.468	S	450489	45
2.875	2.879	.468	S	*470489	47
2.875	2.879	.468	S	*480489	48
2.875	2.883	.500	S	*712136	32
2.996	**3.001**	**.375**	**S**	**472234**	**47**
2.996	3.001	.437	S	*412017	41
2.996	3.001	.437	S	*452017	45
2.996	3.001	.437	S	*472017	47
2.996	3.001	.437	S	*482017	48
2.996	3.001	.500	S	*410139	41
2.996	3.001	.500	S	*450139	45
2.996	3.001	.500	S	*470139	47
2.996	3.001	.500	S	*480139	48
3.000	3.005	.375	S	*412018	41
3.000	3.005	.375	S	*452018	45
3.000	**3.005**	**.375**	**S**	**472018**	**47**
3.000	3.005	.375	N	*472018N	47
3.000	3.005	.375	V	*472018V	47
3.000	3.005	.375	S	*482018	48
3.000	3.005	.437	S	*450718	45
3.000	3.005	.500	S	*411338	41
3.000	3.005	.500	S	*451338	45
3.000	3.005	.500	S	*471338	47
3.000	3.005	.500	S	*481338	48
3.062	**3.066**	**.375**	**S**	**473471**	**47**
3.062	3.066	.500	S	*412019	41
3.062	3.066	.500	S	*452019	45
3.062	3.066	.500	S	*472019	47
3.062	3.066	.500	S	*482019	48
3.125	3.130	.375	S	*412020	41
3.125	3.130	.375	S	*452020	45
3.125	3.130	.375	S	472020	47
3.125	3.130	.375	S	*482020	48
3.125	3.130	.500	S	*410681	41
3.125	3.130	.500	S	*450681	45
3.125	3.130	.500	N	*450681N	45
3.125	3.130	.500	S	*470681	47
3.125	3.130	.500	S	*480681	48
3.187	3.194	.687	S	6636S	35
3.189	3.194	.375	S	*472940	47
3.189	3.194	.437	S	*410354	41
3.189	3.194	.437	S	*450354	45
3.189	**3.194**	**.437**	**S**	**470354**	**47**
3.189	3.194	.437	S	*480354	48
3.189	3.194	.718	L	6186	1L
3.190	3.195	.625	S	*474007	47
3.251	3.256	.375	S	*413245	41
3.251	3.256	.375	S	*453245	45
3.251	**3.256**	**.375**	**S**	**473245**	**47**
3.251	3.256	.375	S	*483245	48
3.251	3.256	.500	S	*410315	41
3.251	3.256	.500	N	*410315N	41
3.251	3.256	.500	S	*450315	45
3.251	3.256	.500	S	*470315	47
3.251	3.256	.500	S	*480315	48
3.350	**3.355**	**.375**	**S**	**412943**	**41**
3.350	3.355	.468	S	*410098	41
3.350	3.355	.468	S	*450098	45
3.350	3.355	.468	S	*470098	47

SIZE SECTION

For Illustration and Material Data See Technical Section
Designed For A Specific Application - Not Recommended For General Use ➡ Hydrodynamic Lip Design-CW ⬅➡ Hydrodynamic Lip Design-Bidirectional
* The U.S. customer service number is 877-4-TIMKEN. The Canadian customer service numbers are 800-565-4927 (English) and 800-565-0438 (French-Canadian). ★ Metric Seal

Hsg. Bore	Seal O.D.	Seal Width	Lip Mat'l	Part No.	Type/ Illus.
2.187" (2-3/16") SHAFT (cont.)					
3.350	3.355	.468	S	* 480098	48
3.350	3.355	.500	S	* 452604	45
3.371	**3.376**	**.375**	**S**	**413472**	**41**
3.371	3.376	.468	S	* 412035	41
3.371	3.376	.468	S	* 452035	45
3.371	3.376	.468	S	* 472035	47
3.371	3.376	.468	S	* 482035	48
3.500	**3.505**	**.375**	**S**	**416268**	**41**
3.500	3.505	.375	S	* 476268	47
3.500	3.505	.375	S	* 486268	48
3.500	3.505	.500	S	* 415636	41
3.500	3.505	.500	S	* 455636	45
3.500	3.505	.500	S	* 475636	47
3.500	3.505	.500	S	* 485636	48
3.543	3.548	.500	S	* 416269	41
3.543	3.548	.500	S	* 456269	45
3.623	**3.628**	**.468**	**S**	**415350**	**41**
3.623	3.628	.468	S	* 455350	45
3.623	3.628	.468	S	* 475350	47
3.623	3.628	.468	S	* 485350	48
4.420	4.520	.687	S	* 6309	39
5.118	5.124	.375	S	476511	47
2.192" SHAFT					
–	–	–	S	800550	VRS1
–	–	–	V	800554	VRS1
–	**–**	**.781**		**99218**	**Redi-Sleeve**
–	3.437	.703	S	* 6922	#
2.200" SHAFT					
–	–	–	S	800550	VRS1
–	–	–	V	800554	VRS1
–	**–**	**.500**		*** 99220**	**Redi-Sleeve**
2.804	–	.300	N	710171	#
3.022	3.028	.422	N	4741⬅	#
2.201" SHAFT					
–	–	–	S	800550	VRS1
–	–	–	V	800554	VRS1
–	**–**	**.500**		*** 99220**	**Redi-Sleeve**
2.735	2.741	.197	S	3553&	284
2.735	2.741	.197	S	* 3948	#
2.830	2.836	.450	S	710069&	#
3.519	3.523	.590	S	2286	74
56,00mm (2.205") SHAFT					
–	–	–	S	800550	VRS1
–	–	–	V	800554	VRS1
–	**–**	**.500**		*** 99220**	**Redi-Sleeve**
66,00	*66,20*	*17,00*	*S*	710382★	#
2.598	2.606	.669			
67,00	*67,20*	*6,00*	*S*	710169★	#
2.638	2.646	.236			
68,00	*68,12*	*10,00*	*N*	56X68X10★	32
2.677	2.682	.394			
68,00	*68,28*	*10,00*	*S*	1932★	49
2.677	2.688	.394			
69,75	*70,00*	*9,00*	*S*	* 56X70X9★	32
2.746	2.756	.354			
70,00	*70,20*	*8,00*	*S*	56X70X8★	35
2.756	2.764	.315			
70,00	*70,20*	*8,00*	*V*	* 56X70X8V★	35
2.756	2.764	.315			
71,75	*72,00*	*8,00*	*S*	* 56X72X8★	32
2.825	2.835	.315			

Hsg. Bore	Seal O.D.	Seal Width	Lip Mat'l	Part No.	Type/ Illus.
56,00mm (2.205") SHAFT (cont.)					
71,75	*72,00*	*9,00*	*S*	* 56X72X9★	32
2.825	2.835	.354			
72,00	*72,20*	*7,00*	*S*	56X72X7★	32
2.835	2.843	.276			
72,00	*72,20*	*8,00*	*S*	710393★	#
2.835	2.843	.315			
72,00	*72,27*	*12,50*	*S*	225227★	#
2.835	2.845	.492			
72,00	*72,29*	*11,50*	*S*	225650★⬅➡	32
2.835	2.846	.453			
72,00	*72,40*	*11,50*	*S*	56X72X11.5★	35
2.835	2.850	.453			
72,00	*72,40*	*11,50*	*S*	56X72X11.5★	35
2.835	2.850	.453			
72,75	*73,00*	*10,00*	*S*	* 56X73X10★	32
2.864	2.874	.394			
73,00	*73,23*	*7,50*	*S*	225673★	#
2.874	2.883	.295			
73,00	*73,23*	*22,00*	*S*	712938★	#
2.874	2.883	.866			
73,00	*73,28*	*12,50*	*S*	1993★	47
2.874	2.885	.492			
74,00	*74,14*	*8,50*	*S*	710176★	87
2.913	2.919	.335			
74,00	*74,20*	*8,00*	*S*	710125★	#
2.913	2.921	.315			
75,00	*75,13*	*6,50*	*S*	4899★	66
2.953	2.958	.256			
75,00	*75,20*	*7,00*	*S*	56X75X7★	32
2.953	2.961	.276			
75,00	*75,33*	*8,00*	*S*	225775★	#
2.953	2.966	.315			
75,75	*76,00*	*8,00*	*S*	* 56X76X8★	32
2.982	2.992	.315			
76,00	*76,12*	*12,30*	*S*	710108★	66
2.992	2.997	.484			
76,00	*76,15*	*11,50*	*S*	* 4905★	72
2.992	2.998	.453			
76,00	*76,15*	*11,50*	*S*	710146★	72
2.992	2.998	.453			
78,00	*78,20*	*8,00*	*S*	* 56X78X8★	32
3.071	3.079	.315			
78,00	*78,28*	*7,50*	*S*	225678★	#
3.071	3.082	.295			
79,72	*80,00*	*10,00*	*S*	* 56X80X10★	32
3.139	3.150	.394			
79,72	*80,00*	*13,00*	*S*	* 56X80X13★	32
3.139	3.150	.512			
80,00	*80,28*	*8,00*	*S*	56X80X8★	32
3.150	3.161	.315			
82,00	*82,20*	*8,00*	*S*	56X82X8★	32
3.228	3.236	.315			
84,72	*85,00*	*10,00*	*S*	* 56X85X10★	32
3.335	3.346	.394			
85,00	*85,28*	*8,00*	*S*	56X85X8★	35
3.346	3.357	.315			
88,00	*88,20*	*8,00*	*S*	56X88X8★	32
3.465	3.472	.315			
90,00	*90,20*	*8,00*	*S*	56X90X8★	32
3.543	3.551	.315			
122,00	*122,25*	*8,00*	*S*	710086★	#
4.803	4.813	.315			
2.218" (2-7/32") SHAFT					
–	–	–	S	800550	VRS1
–	–	–	V	800554	VRS1
3.350	3.355	.468	L	50631	5L
2.222" SHAFT					
–	–	–	S	800550	VRS1

For Illustration and Material Data See Technical Section

Designed For A Specific Application - Not Recommended For General Use ⬅ Hydrodynamic Lip Design-CCW ⬅➡ Hydrodynamic Lip Design-Bidirectional & Flanged O.D.

* The U.S. customer service number is 877-4-TIMKEN. The Canadian customer service numbers are 800-565-4927 (English) and 800-565-0438 (French-Canadian). ★ Metric Seal

Hsg. Bore	Seal O.D.	Seal Width	Lip Mat'l	Part No.	Type/ Illus.
2.222" SHAFT (cont.)					
–	–	–	V	800554	VRS1
3.543	3.548	.760	H	7568	#
2.231" SHAFT					
–	–	–	S	800550	VRS1
–	–	–	V	800554	VRS1
–	**–**	**.500**		***99229**	**Redi-Sleeve**
–	**–**	**.781**		**99230**	**Redi-Sleeve**
3.017	2.974	.070	S	*8730	#
3.371	3.376	.812	S	*392076	#
2.240" SHAFT					
–	–	–	S	800550	VRS1
–	–	–	V	800554	VRS1
–	**–**	**.764**		**99226**	**Redi-Sleeve**
3.190	3.194	.450	S	3095➡	69
57,00mm (2.244") SHAFT					
–	–	–	S	800550	VRS1
–	–	–	V	800554	VRS1
57,12	*82,55*	*7,47*	*S*	*7068★%	200E
2.249	3.250	.294			
66,75	*67,00*	*6,00*	*S*	*57X67X6★	32
2.628	2.638	.236			
67,00	*67,11*	*6,00*	*S*	1984★	25
2.638	2.642	.236			
67,00	*67,11*	*6,00*	*S*	*253752★	25
2.638	2.642	.236			
72,00	*72,25*	*8,40*	*S*	1964★	47
2.835	2.844	.331			
74,75	*75,00*	*12,00*	*S*	*57X75X12★	32
2.943	2.953	.472			
77,00	*77,20*	*8,00*	*S*	710129★	#
3.031	3.039	.315			
79,00	*79,28*	*13,50*	*S*	710072★	#
3.110	3.121	.531			
79,00	*79,28*	*14,98*	*S*	710074★	#
3.110	3.121	.590			
79,72	*80,00*	*12,00*	*S*	*57X80X12★	32
3.139	3.150	.472			
80,00	*80,10*	*8,00*	*S*	710225★	#
3.150	3.154	.315			
81,00	*81,10*	*9,00*	*S*	1928★	47
3.189	3.193	.354			
81,00	*81,20*	*8,00*	*S*	*57X81X8★	32
3.189	3.197	.315			
82,22	*82,50*	*10,00*	*S*	*57X82.5X10★	32
3.237	3.248	.394			
84,72	*85,00*	*10,00*	*S*	*57X85X10★	32
3.335	3.346	.394			
84,72	*85,00*	*12,00*	*S*	*57X85X12★	32
3.335	3.346	.472			
84,72	*85,00*	*15,00*	*S*	*57X85X15★	32
3.335	3.346	.591			
85,00	*85,20*	*13,00*	*S*	57X85X13★	32
3.346	3.354	.512			
92,00	*92,20*	*8,00*	*S*	*57X92X8★	32
3.622	3.630	.315			
2.250" (2-1/4") SHAFT					
–	–	–	S	800550	VRS1
–	–	–	V	800554	VRS1
–	**–**	**.313**		**99227**	**Redi-Sleeve**
–	**–**	**.781**		**99225**	**Redi-Sleeve**
–	2.840	.500	S	710045	VRS1
2.625	2.636	.187	S	341022	34

Hsg. Bore	Seal O.D.	Seal Width	Lip Mat'l	Part No.	Type/ Illus.
2.250" (2-1/4") SHAFT (cont.)					
2.675	2.733	.539	S	722109	VRS1
2.750	–	.250	U	710026	#
2.750	–	.375	U	710041	#
2.873	2.877	.312	S	*481336	48
2.875	2.879	.250	S	43034S	4S
2.875	2.879	.500	S	*453613	45
2.987	2.991	.500	S	*411452	41
2.996	3.001	.437	S	*411341	41
2.996	3.001	.437	N	*411341N	41
2.996	3.001	.437	S	*451341	45
2.996	3.001	.437	H	*451341H	45
2.996	**3.001**	**.437**	**S**	**471341**	**47**
2.996	3.001	.437	H	*471341H	47
2.996	3.001	.437	N	471341N	47
2.996	3.001	.500	S	*410441	41
2.996	3.001	.500	N	*410441N	41
2.996	3.001	.500	S	450441	45
2.996	3.001	.500	N	*450441N	45
2.996	3.001	.500	S	*470441	47
2.996	3.001	.500	V	*470441V	47
2.996	3.001	.500	S	*480441	48
3.000	3.005	.250	S	40520S	4S
3.000	3.005	.375	S	*411272	41
3.000	3.005	.375	S	*451272	45
3.000	**3.005**	**.375**	**S**	**471272**	**47**
3.000	3.005	.375	H	*471272H	47
3.000	3.005	.375	N	471272N	47
3.000	3.005	.375	V	471272V	47
3.000	3.005	.375	S	*481272	48
3.000	3.005	.375	N	*481272N	48
3.000	3.005	.375	V	712250	47
3.000	3.005	.438	V	483323V	48
3.000	3.005	.500	S	410520	41
3.000	3.005	.500	N	*410520N	41
3.000	3.005	.500	S	*450520	45
3.000	3.005	.500	N	*450520N	45
3.000	3.005	.500	S	*470520	47
3.000	3.005	.500	N	*470520N	47
3.000	3.005	.500	S	*480520	48
3.000	3.060	.290	S	*200940%	200E
3.035	3.044	.375	S	352637	35
3.061	**3.066**	**.375**	**S**	**473473**	**47**
3.061	3.066	.437	F	*6082	29
3.061	3.066	.500	N	7937N	41
3.061	3.066	.500	S	*411234	41
3.061	3.066	.500	N	*411234N	41
3.061	3.066	.500	S	*451234	45
3.061	3.066	.500	S	*481234	48
3.125	3.130	.250	S	40433S	4S
3.125	3.130	.375	S	*411138	41
3.125	3.130	.375	S	*451138	45
3.125	**3.130**	**.375**	**S**	**471138**	**47**
3.125	3.130	.375	S	*481138	48
3.125	3.130	.375	H	*481138H	48
3.125	3.130	.375	N	*481138N	48
3.125	3.130	.500	S	*410433	41
3.125	3.130	.500	S	*450433	45
3.125	3.130	.500	N	*450433N	45
3.125	3.130	.500	S	*470433	47
3.125	3.130	.500	S	*480433	48
3.189	3.194	.375	S	*472916	47
3.189	3.194	.375	S	*482916	48
3.189	3.194	.437	S	*50737	5S
3.189	**3.194**	**.437**	**S**	**410737**	**41**
3.189	3.194	.437	S	450737	45
3.189	3.194	.437	N	*450737N	45
3.189	3.194	.437	S	470737	47
3.189	3.194	.437	N	470737N	47
3.189	3.194	.437	S	*480737	48
3.249	3.250	.285	S	200763%	200E
3.250	3.256	.625	S	*8571	#
3.251	3.256	.250	S	40316S	4S

For Illustration and Material Data See Technical Section

Designed For A Specific Application - Not Recommended For General Use ➡ Hydrodynamic Lip Design-CW % External Bore

* The U.S. customer service number is 877-4-TIMKEN. The Canadian customer service numbers are 800-565-4927 (English) and 800-565-0438 (French-Canadian). ★ Metric Seal

2.250" (2-1/4") SHAFT (cont.)

Hsg. Bore	Seal O.D.	Seal Width	Lip Mat'l	Part No.	Type/ Illus.
3.251	3.256	.375	S	*452636	45
3.251	**3.256**	**.375**	**S**	**472636**	**47**
3.251	3.256	.375	V	*472636V	47
3.251	3.256	.375	S	*482636	48
3.251	3.256	.437	S	*410614	41
3.251	3.256	.437	N	*410614N	41
3.251	3.256	.437	S	*450614	45
3.251	3.256	.500	S	410316	41
3.251	3.256	.500	H	*410316H	41
3.251	3.256	.500	N	410316N	41
3.251	3.256	.500	S	450316	45
3.251	3.256	.500	H	*450316H	45
3.251	3.256	.500	N	*450316N	45
3.251	3.256	.500	S	*470316	47
3.251	3.256	.500	S	*480316	48
3.251	3.256	.500	S	*480316N	48
3.252	3.260	.551	N	712512⬅	#
3.264	3.269	.312	F	*292100	29
3.350	3.355	.250	S	*42289	4S
3.350	3.355	.312	N	454136N	45
3.350	**3.355**	**.375**	**S**	**411253**	**41**
3.350	3.355	.468	L	*50099	5L
3.350	3.355	.468	S	*50099S	5S
3.350	3.355	.468	S	*410099	41
3.350	3.355	.468	N	*410099N	41
3.350	3.355	.468	S	450099	45
3.350	3.355	.468	S	*480099	48
3.350	3.355	.500	S	*456622	45
3.371	**3.376**	**.375**	**S**	**412920**	**41**
3.371	**3.376**	**.375**	**V**	**412920V**	**41**
3.371	3.376	.375	S	442109	44
3.371	3.376	.375	S	*452920	45
3.371	3.376	.375	S	*472920	47
3.371	3.376	.375	S	*482920	48
3.371	3.376	.468	S	*410132	41
3.371	3.376	.468	S	450132	45
3.371	3.376	.468	S	*470132	47
3.371	3.376	.468	S	*480132	48
3.371	3.376	.468	N	*480132N	48
3.371	3.376	.500	S	*442270	44
3.372	3.377	.475	S	370219A	12
3.400	3.700	.280	S	200929%	200E
3.443	3.447	.250	S	41075S	4S
3.481	3.486	.500	S	455136	45
3.500	3.505	.250	S	*42587S	4S
3.500	**3.505**	**.375**	**S**	**411376**	**41**
3.500	3.505	.375	S	*471376	47
3.500	3.505	.500	S	*415093	41
3.500	3.505	.500	N	*415093N	41
3.500	3.505	.500	S	455093	45
3.500	3.505	.500	S	*475093	47
3.500	3.505	.500	S	*485093	48
3.543	**3.548**	**.500**	**S**	**416270**	**41**
3.623	**3.628**	**.468**	**S**	**415234**	**41**
3.623	3.628	.468	S	*455234	45
3.623	3.628	.468	S	*475234	47
3.623	3.628	.468	N	475234N	47
3.623	3.628	.468	S	*485234	48
3.623	3.628	.500	S	*456792	45
3.751	**3.756**	**.500**	**S**	**415259**	**41**
3.751	3.756	.500	S	*455259	45
3.751	3.756	.500	S	*475259	47
3.751	3.756	.500	S	*485259	48
3.876	3.881	.468	L	55337	5L
4.003	**4.008**	**.468**	**S**	**415254**	**41**
4.003	4.008	.468	S	*455254	45
4.003	4.008	.468	S	*475254	47
4.010	4.015	.843	L	*5921	1L
4.064	4.069	1.092	N	*4036N	90
4.064	4.069	1.092	N	722250	90

2.254" SHAFT

Hsg. Bore	Seal O.D.	Seal Width	Lip Mat'l	Part No.	Type/ Illus.
2.756	2.763	.340	V	481191V	48

2.255" SHAFT

Hsg. Bore	Seal O.D.	Seal Width	Lip Mat'l	Part No.	Type/ Illus.
–	–	–	S	800550	VRS1
–	–	–	V	800554	VRS1
–	**–**	**.313**		**99227**	**Redi-Sleeve**
–	**–**	**.781**		**99225**	**Redi-Sleeve**
3.312	3.317	.380	S	44052	4S

2.258" SHAFT

Hsg. Bore	Seal O.D.	Seal Width	Lip Mat'l	Part No.	Type/ Illus.
–	–	–	S	800550	VRS1
–	–	–	V	800554	VRS1
3.906	3.950	.250	S	*8754S	#

2.272" SHAFT

Hsg. Bore	Seal O.D.	Seal Width	Lip Mat'l	Part No.	Type/ Illus.
–	–	–	S	800550	VRS1
–	–	–	V	800554	VRS1
2.654	2.661	.250	T	39821	W

58,00mm (2.283") SHAFT

Hsg. Bore	Seal O.D.	Seal Width	Lip Mat'l	Part No.	Type/ Illus.
–	–	–	S	800550	VRS1
–	–	–	V	800554	VRS1
67,75	*68,00*	*9,00*	*S*	*58X68X9★	32
2.667	2.677	.354			
69,75	*70,00*	*7,00*	*S*	*58X70X7★	32
2.746	2.756	.276			
69,75	*70,00*	*11,00*	*S*	*58X70X11★	32
2.746	2.756	.433			
71,75	*72,00*	*9,00*	*S*	*58X72X9★	32
2.825	2.835	.354			
71,75	*72,00*	*10,00*	*S*	*58X72X10★	32
2.825	2.835	.394			
72,00	*72,18*	*8,00*	*S*	225872★	33
2.835	2.842	.315			
72,00	*72,20*	*8,00*	*V*	*58X72X8V★	35
2.835	2.843	.315			
72,00	*72,28*	*8,00*	*S*	58X72X8★	32
2.835	2.846	.315			
73,00	*73,10*	*8,50*	*S*	710439★	#
2.874	2.878	.335			
73,75	*74,00*	*10,00*	*S*	*58X74X10★	32
2.903	2.913	.394			
74,00	*74,12*	*13,00*	*N*	225874★	101
2.913	2.918	.512			
74,00	*74,20*	*10,00*	*S*	710271★⬅	32
2.913	2.921	.394			
74,75	*75,00*	*9,00*	*S*	*58X75X9★	32
2.943	2.953	.354			
74,75	*75,00*	*10,00*	*S*	*58X75X10★	32
2.943	2.953	.394			
74,75	*75,00*	*12,00*	*S*	*58X75X12★	32
2.943	2.953	.472			
75,00	*75,10*	*9,00*	*S*	710400★	47
2.953	2.957	.354			
75,00	*75,20*	*7,00*	*S*	710136★	#
2.953	2.961	.276			
75,00	*75,26*	*7,00*	*S*	58X75X7★	32
2.953	2.963	.276			
75,00	*75,28*	*11,00*	*S*	58X75X11★	35
2.953	2.964	.433			
75,00	*75,28*	*11,00*	*S*	225875★	32
2.953	2.964	.433			
76,00	*76,10*	*6,50*	*S*	710183★	66
2.992	2.996	.256			
76,00	*76,23*	*7,80*	*S*	710230★	#
2.992	3.001	.307			
77,00	*77,28*	*8,50*	*N*	225877★	35
3.031	3.043	.335			

For Illustration and Material Data See Technical Section

Designed For A Specific Application - Not Recommended For General Use ⬅ Hydrodynamic Lip Design-CCW % External Bore

* The U.S. customer service number is 877-4-TIMKEN. The Canadian customer service numbers are 800-565-4927 (English) and 800-565-0438 (French-Canadian). ★ Metric Seal

Hsg. Bore	Seal O.D.	Seal Width	Lip Mat'l	Part No.	Type/ Illus.
58,00mm (2.283") SHAFT (cont.)					
77,72	*78,00*	*9,00*	*S*	*58X78X9★	32
3.060	3.071	.354			
77,72	*78,00*	*12,00*	*S*	*58X78X12★	32
3.060	3.071	.472			
78,00	*78,20*	*8,00*	*S*	*58X78X8★	32
3.071	3.079	.315			
78,00	*78,20*	*10,00*	*S*	710144★⬅	#
3.071	3.079	.394			
79,72	*80,00*	*9,00*	*S*	*58X80X9★	32
3.139	3.150	.354			
79,72	*80,00*	*10,00*	*S*	*58X80X10★	32
3.139	3.150	.394			
79,72	*80,00*	*12,00*	*S*	*58X80X12★	32
3.139	3.150	.472			
79,72	*80,00*	*13,00*	*S*	*58X80X13★	32
3.139	3.150	.512			
80,00	*80,20*	*8,00*	*V*	*58X80X8V★	35
3.150	3.157	.315			
80,00	*80,28*	*8,00*	*S*	225880★	32
3.150	3.161	.315			
80,00	*80,28*	*8,00*	*S*	58X80X8★	32
3.150	3.161	.315			
80,14	*80,24*	*9,53*	*S*	493291★	49
3.155	3.159	.375			
80,98	*81,18*	*6,35*	*S*	*341119★	34
3.188	3.196	.250			
81,72	*82,00*	*12,00*	*S*	*58X82X12★	32
3.217	3.228	.472			
82,00	*82,20*	*8,00*	*S*	*58X82X8★	32
3.228	3.236	.315			
84,72	*85,00*	*8,00*	*S*	*58X85X8★	32
3.335	3.346	.315			
84,72	*85,00*	*12,00*	*S*	*58X85X12★	32
3.335	3.346	.472			
85,00	*85,25*	*13,00*	*S*	58X85X13★	32
3.346	3.356	.512			
85,00	*85,28*	*10,00*	*S*	58X85X10★	35
3.346	3.357	.394			
88,00	*88,20*	*8,00*	*S*	58X88X8★	32
3.465	3.472	.315			
90,00	*90,28*	*10,00*	*S*	58X90X10★	35
3.543	3.554	.394			
91,72	*92,00*	*8,00*	*S*	*58X92X8★	32
3.611	3.622	.315			
103,00	*103,20*	*11,00*	*N*	710268★⬅	40
4.055	4.063	.433			
2.296" SHAFT					
–	–	–	S	800600	VRS1
3.148	3.153	.359	S	204035	204
3.148	3.153	.359	F	205035	205
2.310" SHAFT					
–	–	–	S	800600	VRS1
–	**–**	**.781**		**99231**	**Redi-Sleeve**
2.965	2.970	.250	S	*8120	#
2.312" (2-5/16") SHAFT					
–	–	–	S	800600	VRS1
–	**–**	**.781**		**99231**	**Redi-Sleeve**
3.000	3.004	.375	S	4131&	287
3.000	3.005	.250	S	442874	44
3.000	3.005	.500	S	*411160	41
3.000	3.005	.500	N	*411160N	41
3.000	3.005	.500	V	411160V	41
3.000	3.005	.500	N	*451160N	45
3.065	3.070	.281	S	43109S	4S
3.125	**3.130**	**.375**	**S**	**472150**	**47**

Hsg. Bore	Seal O.D.	Seal Width	Lip Mat'l	Part No.	Type/ Illus.
2.312" (2-5/16") SHAFT (cont.)					
3.125	3.130	.375	N	*472150N	47
3.125	3.130	.375	V	*472150V	47
3.125	3.130	.500	S	*410551	41
3.125	3.130	.500	S	*450551	45
3.125	3.135	.375	S	*712145	35
3.251	**3.256**	**.375**	**S**	**411394**	**41**
3.251	3.256	.375	S	*471394	47
3.251	3.256	.437	S	*452152	45
3.251	3.256	.500	S	*50317	5S
3.251	3.256	.500	S	*410317	41
3.251	3.256	.500	S	450317	45
3.251	3.256	.500	N	*450317N	45
3.251	3.256	.500	S	*470317	47
3.313	3.318	.375	L	5924	4L
3.350	**3.355**	**.375**	**S**	**410694**	**41**
3.350	3.355	.468	N	*410100N	41
3.350	3.355	.468	S	*450100	45
3.371	**3.376**	**.468**	**S**	**450133**	**45**
3.500	**3.505**	**.375**	**S**	**416444**	**41**
3.500	3.505	.500	S	*415094	41
3.500	3.505	.500	S	*455094	45
3.500	3.505	.500	N	*455094N	45
3.543	3.548	.500	S	*455647	45
3.751	3.756	.500	S	455321	45
4.003	4.008	.468	S	*455267	45
59,00mm (2.323") SHAFT					
–	–	–	S	800600	VRS1
75,00	*75,11*	*10,00*	*S*	710168★	47
2.953	2.957	.394			
78,30	*78,55*	*8,00*	*S*	710229★	40
3.083	3.093	.315			
78,30	*78,55*	*8,00*	*S*	710231★	32
3.083	3.093	.315			
100,00	*100,28*	*10,00*	*N*	710121★	#
3.937	3.948	.394			
2.324" SHAFT					
.000	3.546	.591	S	710508	71
2.325" SHAFT					
–	–	–	S	800600	VRS1
3.125	3.130	.313	S	710430&	#
2.330" SHAFT					
–	–	–	S	800600	VRS1
–	**–**	**.750**		**99233**	**Redi-Sleeve**
2.997	3.001	.312	S	493637	49
3.000	3.005	.400	N	3945⬅➡	48
3.000	3.005	.400	N	*332271N	33
2.336" SHAFT					
–	–	–	S	800600	VRS1
3.408	3.402	.187	N	*9246N	25
2.359" SHAFT					
3.938	3.952	.575	V	370199A	09
60,00mm (2.362") SHAFT					
–	–	–	S	800600	VRS1
–	**–**	**.370**		***99241**	**Redi-Sleeve**
–	**–**	**.787**		**99235**	**Redi-Sleeve**
69,75	*70,00*	*10,00*	*S*	*60X70X10★	32
2.746	2.756	.394			

For Illustration and Material Data See Technical Section
Designed For A Specific Application - Not Recommended For General Use ⬅ Hydrodynamic Lip Design-CCW ⬅➡ Hydrodynamic Lip Design-Bidirectional & Flanged O.D.
* The U.S. customer service number is 877-4-TIMKEN. The Canadian customer service numbers are 800-565-4927 (English) and 800-565-0438 (French-Canadian). ★ Metric Seal

60,00mm (2.362") SHAFT (cont.)

Hsg. Bore	Seal O.D.	Seal Width	Lip Mat'l	Part No.	Type/ Illus.
69,75	70,00	12,00	S	*60X70X12★	32
2.746	2.756	.472			
71,75	72,00	9,00	S	*60X72X9★	32
2.825	2.835	.354			
71,75	72,00	10,00	S	*60X72X10★	32
2.825	2.835	.394			
72,00	72,10	7,50	S	710379★	47
2.835	2.839	.295			
72,00	72,28	8,00	S	60X72X8★	35
2.835	2.846	.315			
73,75	74,00	10,00	S	*60X74X10★	32
2.903	2.913	.394			
74,00	74,10	10,00	V	226001★⬅	25
2.913	2.917	.394			
74,75	75,00	9,00	S	*60X75X9★	32
2.943	2.953	.354			
74,75	75,00	10,00	S	*60X75X10★	32
2.943	2.953	.394			
74,75	75,00	12,00	S	*60X75X12★	32
2.943	2.953	.472			
75,00	75,20	8,00	V	*60X75X8V★	32
2.953	2.961	.315			
75,00	75,28	8,00	S	60X75X8★	32
2.953	2.964	.315			
75,00	75,33	9,00	N	226015★⬅	32
2.953	2.966	.354			
75,00	75,50	10,00	T	712113★➡	FW-H
2.953	2.972	.394			
75,00	86,00	11,80	S	710093★	#
2.953	3.386	.465			
75,75	76,00	9,00	S	*60X76X9★	32
2.982	2.992	.354			
76,72	77,00	12,00	S	*60X77X12★	32
3.020	3.031	.472			
77,72	78,00	9,00	S	*60X78X9★	32
3.060	3.071	.354			
77,72	78,00	10,00	S	*60X78X10★	32
3.060	3.071	.394			
78,00	78,20	8,00	S	*60X78X8★	32
3.071	3.079	.315			
78,00	78,28	8,00	N	226018★	35
3.071	3.082	.315			
79,22	79,50	10,00	S	*60X79.5X10★	32
3.119	3.130	.394			
79,72	80,00	9,00	S	*60X80X9★	32
3.139	3.150	.354			
79,72	80,00	10,00	S	*60X80X10★	32
3.139	3.150	.394			
79,72	80,00	12,00	S	*60X80X12★	32
3.139	3.150	.472			
79,72	80,00	13,00	S	*60X80X13★	32
3.139	3.150	.512			
80,00	80,20	8,00	S	60X80X8★	32
3.150	3.157	.315			
80,00	80,20	8,00	V	*60X80X8V★	32
3.150	3.157	.315			
80,00	80,20	8,00	S	710333★⬅	32
3.150	3.157	.315			
80,00	80,29	8,00	S	226020★	35
3.150	3.161	.315			
81,72	82,00	9,00	S	*60X82X9★	32
3.217	3.228	.354			
82,00	**82,20**	**7,00**	**S**	**60X82X7★**	**32**
3.228	**3.236**	**.276**			
82,00	82,20	10,00	N	710390★➡	32
3.228	3.236	.394			
82,00	82,20	12,00	V	710350★➡	#
3.228	3.236	.472			
82,00	82,20	12,00	H	712006★⬅	32
3.228	3.236	.472			
82,00	82,28	12,00	S	2001★⬅	32
3.228	3.239	.472			

60,00mm (2.362") SHAFT (cont.)

Hsg. Bore	Seal O.D.	Seal Width	Lip Mat'l	Part No.	Type/ Illus.
82,00	82,30	12,00	S	60X82X12★	35
3.228	3.240	.472			
83,72	84,00	10,00	S	*60X84X10★	32
3.296	3.307	.394			
84,72	85,00	6,00	S	*60X85X6★	32
3.335	3.346	.236			
84,72	85,00	10,00	S	*60X85X10★	32
3.335	3.346	.394			
84,72	85,00	13,00	S	*60X85X13★	32
3.335	3.346	.512			
85,00	85,20	8,00	V	*60X85X8V★	32
3.346	3.354	.315			
85,00	85,20	12,00	S	60X85X12★	32
3.346	3.354	.472			
85,00	85,28	8,00	S	60X85X8★	32
3.346	3.357	.315			
85,50	85,70	7,00	H	*4599H★➡	#
3.366	3.374	.276			
85,72	86,00	10,00	S	*60X86X10★	32
3.375	3.386	.394			
86,00	86,10	7,00	S	710182★	66
3.386	3.390	.276			
88,00	88,20	8,00	S	*60X88X8★	32
3.465	3.472	.315			
89,72	90,00	11,00	S	*60X90X11★	32
3.532	3.543	.433			
89,72	90,00	12,00	S	*60X90X12★	32
3.532	3.543	.472			
89,72	90,00	13,00	S	*60X90X13★	32
3.532	3.543	.512			
90,00	90,25	8,00	S	60X90X8★	32
3.543	3.553	.315			
90,00	90,25	22,00	S	1985★	#
3.543	3.553	.866			
90,00	90,27	10,00	S	60X90X10★	35
3.543	3.554	.394			
94,72	95,00	10,00	S	*60X95X10★	32
3.729	3.740	.394			
94,72	95,00	12,00	S	*60X95X12★	32
3.729	3.740	.472			
94,72	95,00	13,00	S	*60X95X13★	32
3.729	3.740	.512			
95,00	95,20	8,00	S	60X95X8★	32
3.740	3.748	.315			
99,72	100,00	13,00	S	*60X100X13★	32
3.926	3.937	.512			
100,00	100,20	8,00	S	*60X100X8★	32
3.937	3.945	.315			
100,00	100,20	10,00	N	60X100X10★⬅➡	32
3.937	3.945	.394			
103,00	103,10	12,00	N	710276★⬅➡	40
4.055	4.059	.472			
103,72	104,00	12,00	S	*60X104X12★	32
4.083	4.094	.472			
105,00	105,20	8,00	S	*60X105X8★	32
4.134	4.142	.315			
109,72	110,00	12,00	S	*60X110X12★	32
4.320	4.331	.472			
110,00	110,20	8,00	S	60X110X8★	32
4.331	4.339	.315			

2.367" SHAFT

–	–	–	S	800600	VRS1
3.366	3.374	.257	V	4539V	75
3.366	3.374	.257	H	*3765➡	48
3.366	3.374	.257	H	4539H➡	75

2.375" (2-3/8") SHAFT

–	–	–	S	800600	VRS1
–	**–**	**.526**		**99240**	**Redi-Sleeve**

For Illustration and Material Data See Technical Section
Designed For A Specific Application - Not Recommended For General Use ➡ Hydrodynamic Lip Design-CW ⬅ Hydrodynamic Lip Design-CCW
⬅➡ Hydrodynamic Lip Design-Bidirectional
* The U.S. customer service number is 877-4-TIMKEN. The Canadian customer service numbers are 800-565-4927 (English) and 800-565-0438 (French-Canadian). ★ Metric Seal

2.375" (2-3/8") SHAFT (cont.)

Hsg. Bore	Seal O.D.	Seal Width	Lip Mat'l	Part No.	Type/ Illus.
–	**–**	**.594**		**99238**	**Redi-Sleeve**
–	**–**	**.781**		**99236**	**Redi-Sleeve**
–	**–**	**.781**		**99237**	**Redi-Sleeve**
2.873	2.877	.312	S	*253610	25
2.996	**3.001**	**.500**	**S**	**470764**	**47**
3.000	3.005	.250	S	41026S	4S
3.000	**3.005**	**.375**	**S**	**473573**	**47**
3.000	3.013	.394	T	5288⬅	#
3.000	3.013	.400	V	3393⬅	32
3.061	**3.066**	**.375**	**S**	**473474**	**47**
3.061	3.066	.500	S	*410988	41
3.061	3.066	.500	N	*410988N	41
3.061	3.066	.500	S	*450988	45
3.061	3.066	.500	H	*450988H	45
3.061	3.066	.500	N	*450988N	45
3.061	3.066	.500	V	*450988V	45
3.061	3.066	.500	S	*470988	47
3.061	3.066	.500	N	*470988N	47
3.061	3.066	.500	S	*480988	48
3.061	3.066	.500	H	480988H	48
3.112	3.117	.250	S	*42707S	4S
3.112	3.117	.500	S	*411178	41
3.125	3.130	.375	S	*410565	41
3.125	3.130	.375	N	*410565N	41
3.125	3.130	.375	S	*450565	45
3.125	**3.130**	**.375**	**S**	**470565**	**47**
3.125	3.130	.375	N	*470565N	47
3.125	3.130	.375	V	*470565V	47
3.125	3.130	.375	S	*480565	48
3.125	3.130	.500	S	*410552	41
3.125	3.130	.500	N	*410552N	41
3.125	3.130	.500	S	*450552	45
3.125	3.130	.500	N	*450552N	45
3.125	3.130	.500	S	*470552	47
3.125	3.130	.500	H	*470552H	47
3.125	3.130	.500	N	*470552N	47
3.125	3.130	.500	S	*480552	48
3.125	3.138	.500	V	*320552V	32
3.189	**3.194**	**.375**	**S**	**473475**	**47**
3.189	3.194	.437	S	*410320	41
3.189	3.194	.437	H	*410320H	41
3.189	3.194	.437	N	*410320N	41
3.189	3.194	.437	S	*450320	45
3.189	3.194	.437	S	*470320	47
3.189	3.194	.437	S	*480320	48
3.251	**3.255**	**.375**	**N**	**413246N**	**41**
3.251	3.256	.375	S	413246	41
3.251	3.256	.375	S	*453246	45
3.251	3.256	.375	S	*473246	47
3.251	3.256	.375	S	*483246	48
3.251	3.256	.375	N	483246N➡	48
3.251	3.256	.437	S	*412038	41
3.251	3.256	.437	N	412038N	41
3.251	3.256	.437	S	*452038	45
3.251	3.256	.500	S	*410574	41
3.251	3.256	.500	N	*410574N	41
3.251	3.256	.500	S	*450574	45
3.251	3.256	.500	H	*450574H	45
3.251	3.256	.500	N	*450574N	45
3.251	3.256	.500	S	*470574	47
3.251	3.256	.500	N	470574N	47
3.251	3.256	.500	S	*480574	48
3.251	3.256	.625	V	710210	74
3.252	3.256	.500	H	480574H	48
3.265	3.270	.495	S	5119	49
3.266	3.270	.495	S	*492486	49
3.350	3.355	.250	S	40101S	4S
3.350	3.355	.250	S	442507	44
3.350	3.355	.312	S	*454199	45
3.350	**3.355**	**.375**	**S**	**412119**	**41**

2.375" (2-3/8") SHAFT (cont.)

Hsg. Bore	Seal O.D.	Seal Width	Lip Mat'l	Part No.	Type/ Illus.
3.350	3.355	.438	S	472856	47
3.350	3.355	.468	S	*410101	41
3.350	3.355	.468	N	410101N	41
3.350	3.355	.468	S	*410101S	41
3.350	3.355	.468	V	*410101V	41
3.350	3.355	.468	S	450101	45
3.350	3.355	.468	H	*450101H	45
3.350	3.355	.468	N	*450101N	45
3.350	3.355	.468	S	*470101	47
3.350	3.355	.468	N	*470101N	47
3.350	3.355	.468	S	*480101	48
3.350	3.355	.468	H	*480101H	48
3.350	3.355	.468	N	*480101N	48
3.350	3.355	.625	N	*4155	#
3.350	3.355	.703	S	*474198	47
3.371	**3.376**	**.375**	**S**	**413247**	**41**
3.371	3.376	.375	S	*453247	45
3.371	3.376	.375	S	*473247	47
3.371	3.376	.375	S	*483247	48
3.371	3.376	.468	S	*50350	5S
3.371	3.376	.468	S	*410350	41
3.371	3.376	.468	S	450350	45
3.371	3.376	.468	H	*450350H	45
3.371	3.376	.468	N	*450350N	45
3.371	3.376	.468	S	*470350	47
3.371	3.376	.468	S	*480350	48
3.471	3.616	.290	S	200855%	200E
3.481	**3.486**	**.437**	**S**	**410987**	**41**
3.481	3.486	.437	S	470987	47
3.481	3.486	.500	S	*50103	5S
3.481	3.486	.500	S	*410103	41
3.481	3.486	.500	S	450103	45
3.481	3.486	.663	L	*6214	3L
3.483	3.488	.500	N	410686N	41
3.483	3.488	.500	N	410686N	41
3.483	3.488	.500	S	450686	45
3.500	**3.505**	**.375**	**S**	**416271**	**41**
3.500	3.505	.375	A	416271A	41
3.500	3.505	.375	N	*416271N	41
3.500	3.505	.375	S	*456271	45
3.500	3.505	.375	V	*456271V	45
3.500	3.505	.375	S	*476271	47
3.500	3.505	.375	S	*486271	48
3.500	3.505	.500	S	*55095S	5S
3.500	3.505	.500	S	*415095	41
3.500	3.505	.500	N	*415095N	41
3.500	3.505	.500	S	*455095	45
3.500	3.505	.500	S	*475095	47
3.500	3.505	.500	N	475095N	47
3.500	3.505	.500	S	*485095	48
3.500	3.505	.703	S	*415971	41
3.500	3.505	.703	H	*415971H	41
3.500	3.505	.730	V	*3278	#
3.543	**3.548**	**.375**	**S**	**412861**	**41**
3.543	3.548	.500	S	*415248	41
3.543	3.548	.500	N	415248N	41
3.543	3.548	.500	S	*455248	45
3.601	3.606	.437	L	*55857	5L
3.601	**3.606**	**.437**	**S**	**415857**	**41**
3.623	3.628	.359	S	*55829	5S
3.623	**3.628**	**.375**	**S**	**410825**	**41**
3.623	3.628	.375	S	*470825	47
3.623	3.628	.468	N	*415380N	41
3.623	3.628	.468	S	*455380	45
3.623	3.628	.468	N	*455380N	45
3.623	3.628	.468	V	*455380V	45
3.623	3.628	.468	S	*475380	47
3.623	3.628	.468	N	475380N	47
3.623	3.628	.500	S	*456472	45
3.623	3.628	.500	N	456472N	45
3.750	3.755	.250	S	*47314S	4S
3.750	3.756	.500	S	*455728	45

For Illustration and Material Data See Technical Section

Designed For A Specific Application - Not Recommended For General Use ➡ Hydrodynamic Lip Design-CW ⬅ Hydrodynamic Lip Design-CCW % External Bore

* The U.S. customer service number is 877-4-TIMKEN. The Canadian customer service numbers are 800-565-4927 (English) and 800-565-0438 (French-Canadian).

2.375" (2-3/8") SHAFT (cont.)

Hsg. Bore	Seal O.D.	Seal Width	Lip Mat'l	Part No.	Type/ Illus.
3.751	**3.756**	**.500**	**S**	**416071**	**41**
3.875	3.881	1.060	N	*2756N&	74
3.875	3.881	1.060	N	711553⬅➡	74
3.876	**3.881**	**.375**	**S**	**417480**	**41**
3.876	3.881	.375	N	*417480N	41
3.876	3.881	.468	S	455860	45
4.064	4.069	1.092	N	*4038N	90
4.064	4.069	1.092	N	712375	90
4.310	5.880	.331	S	*6959	#
4.330	4.335	.500	N	*416795N	41
4.376	4.381	.625	S	*455650	45
4.498	4.504	.391	N	714512⬅➡	87
4.498	4.504	.860	N	*4512⬅➡	#
4.498	4.504	1.060	N	*2757N&	74
4.500	4.504	1.060	N	710006➡	74

60,50mm (2.382") SHAFT

77,72	*78,00*	*10,00*	*S*	*60.5X78X10★	32
3.060	3.071	.394			

2.390" SHAFT

3.260	3.300	.294	S	*200939%	200E

2.395" SHAFT

–	–	–	S	800600	VRS1
3.941	3.948	.070	S	*8829	#

61,00mm (2.402") SHAFT

–	–	–	S	800600	VRS1
0,00	*78,00*	*13,49*	*S*	710528★	#
.000	3.071	.531			
76,00	*76,28*	*7,00*	*S*	226150★	#
2.992	3.003	.276			
88,00	*88,00*	*7,00*	*S*	710170★	#
3.465	3.465	.276			

2.420" SHAFT

–	–	–	S	800600	VRS1
3.000	3.005	.382	S	4160	281
3.349	3.355	.375	V	*3501V	69
3.552	3.558	.336	S	*4185	#

2.430" SHAFT

–	–	–	S	800600	VRS1
–	3.031	.380	S	*7187S	#

2.432" SHAFT

–	–	–	S	800600	VRS1
3.070	3.075	.227	N	4019N⬅➡	47

2.437" (2-7/16") SHAFT

–	–	–	S	800600	VRS1
–	**–**	**.500**		**99242**	**Redi-Sleeve**
–	**–**	**.781**		**99243**	**Redi-Sleeve**
3.117	3.145	.540	S	*9303S	#
3.125	**3.130**	**.375**	**S**	**471887**	**47**
3.125	3.130	.375	H	*471887H	47
3.125	3.130	.375	N	*471887N	47
3.125	3.130	.375	H	*481887H	48
3.125	3.130	.500	S	*450525	45
3.125	3.130	.500	S	*410525	41
3.149	3.154	.291	S	*200397	200
3.251	3.256	.250	S	*40322	4S
3.251	3.256	.375	S	*413477	41

2.437" (2-7/16") SHAFT (cont.)

Hsg. Bore	Seal O.D.	Seal Width	Lip Mat'l	Part No.	Type/ Illus.
3.251	**3.256**	**.437**	**S**	**412040**	**41**
3.251	3.256	.500	S	*410322	41
3.251	3.256	.500	S	*450322	45
3.251	3.256	.500	S	*470322	47
3.350	**3.355**	**.375**	**S**	**411500**	**41**
3.350	3.355	.468	S	*410374	41
3.350	3.355	.468	N	*410374N	41
3.350	3.355	.468	S	*450374	45
3.371	**3.376**	**.375**	**S**	**413478**	**41**
3.371	3.376	.468	S	*410324	41
3.371	3.376	.468	S	*450324	45
3.481	3.486	.500	S	450104	45
3.500	**3.505**	**.375**	**S**	**411245**	**41**
3.500	3.505	.500	S	*415096	41
3.500	3.505	.500	N	*415096N	41
3.500	3.505	.500	S	455096	45
3.500	3.505	.500	V	*455096V	45
3.500	3.505	.500	S	*475096	47
3.543	**3.548**	**.375**	**S**	**417073**	**41**
3.543	3.548	.500	S	*455000	45
3.623	3.628	.468	S	*476272	47
3.624	3.628	.375	S	3210	49
4.000	4.055	1.093	S	*8636	#

62,00mm (2.441") SHAFT

–	–	–	S	800600	VRS1
–	**–**	**.500**		**99242**	**Redi-Sleeve**
74,00	*74,10*	*7,00*	*S*	710392★	#
2.913	2.917	.276			
74,75	*75,00*	*10,00*	*S*	*62X75X10★	32
2.943	2.953	.394			
74,75	*75,00*	*12,00*	*S*	*62X75X12★	32
2.943	2.953	.472			
77,72	*78,00*	*10,00*	*S*	*62X78X10★	32
3.060	3.071	.394			
78,00	*78,10*	*7,00*	*S*	710213★	281
3.071	3.075	.276			
78,00	*78,20*	*8,00*	*S*	*62X78X8★	32
3.071	3.079	.315			
79,72	*80,00*	*12,00*	*S*	*62X80X12★	32
3.139	3.150	.472			
80,00	*80,20*	*9,00*	*S*	62X80X9★	32
3.150	3.157	.315			
80,00	*80,20*	*10,00*	*V*	*62X80X10V★	35
3.150	3.157	.394			
80,00	*80,28*	*10,00*	*S*	62X80X10★	32
3.150	3.161	.394			
81,72	*82,00*	*10,00*	*S*	*62X82X10★	32
3.217	3.228	.394			
82,00	*82,20*	*8,00*	*S*	*62X82X8★	32
3.228	3.236	.315			
84,72	*85,00*	*10,00*	*S*	*62X85X10★	32
3.335	3.346	.394			
84,72	*85,00*	*12,00*	*S*	*62X85X12★	32
3.335	3.346	.472			
84,72	*85,00*	*13,00*	*S*	*62X85X13★	32
3.335	3.346	.512			
85,00	*85,13*	*8,00*	*S*	62X85X8★	41
3.346	3.352	.315			
85,00	*85,13*	*8,00*	*S*	226285★	41
3.346	3.352	.315			
85,00	*85,13*	*8,00*	*S*	*414072★	41
3.346	3.352	.315			
88,00	*88,20*	*8,00*	*S*	62X88X8★	32
3.465	3.472	.315			
88,72	*89,00*	*12,00*	*S*	*62X89X12★	32
3.493	3.504	.472			
89,72	*90,00*	*13,00*	*S*	*62X90X13★	32
3.532	3.543	.512			
90,00	*90,28*	*10,00*	*S*	62X90X10★	32
3.543	3.554	.394			

For Illustration and Material Data See Technical Section
Designed For A Specific Application - Not Recommended For General Use ➡ Hydrodynamic Lip Design-CW ⬅➡ Hydrodynamic Lip Design-Bidirectional % External Bore & Flanged O.D. * The U.S. customer service number is 877-4-TIMKEN. The Canadian customer service numbers are 800-565-4927 (English) and 800-565-0438 (French-Canadian).
★ Metric Seal

Hsg. Bore	Seal O.D.	Seal Width	Lip Mat'l	Part No.	Type/ Illus.
62,00mm (2.441") SHAFT (cont.)					
92,00	*92,20*	*8,00*	*S*	62X92X8★	32
3.622	3.630	.315			
94,72	*95,00*	*12,00*	*S*	∗62X95X12★	32
3.729	3.740	.472			
99,72	*100,00*	*10,00*	*S*	∗62X100X10★	32
3.926	3.937	.394			
99,72	*100,00*	*12,00*	*S*	∗62X100X12★	32
3.926	3.937	.472			
100,00	*100,20*	*8,00*	*S*	∗62X100X8★	32
3.937	3.945	.315			
100,00	*100,30*	*7,00*	*S*	62X100X7★	32
3.937	3.949	.276			
109,72	*110,00*	*13,00*	*S*	∗62X110X13★	32
4.320	4.331	.512			
2.468" SHAFT					
–	–	–	S	800600	VRS1
3.236	3.241	.250	S	∗42686	4S
3.350	3.355	.468	L	50560	5L
2.470" SHAFT					
–	–	–	S	800600	VRS1
3.063	3.187	.510	S	∗5957S	273
2.474" SHAFT					
–	–	–	S	800600	VRS1
3.543	3.548	.285	S	6575S	200
63,00mm (2.480") SHAFT					
–	–	–	S	800600	VRS1
–	–	–	S	800650	VRS1
–	–	–	V	800654	VRS1
78,00	*78,20*	*8,00*	*S*	∗63X78X8★	32
3.071	3.079	.315			
79,72	*80,00*	*9,00*	*S*	∗63X80X9★	32
3.139	3.150	.354			
80,00	*80,20*	*8,00*	*S*	∗63X80X8★	32
3.150	3.157	.315			
82,00	*82,20*	*8,00*	*S*	∗63X82X8★	32
3.228	3.236	.315			
82,22	*82,50*	*10,00*	*S*	∗63X82.5X10★	32
3.237	3.248	.394			
84,07	*84,23*	*12,70*	*F*	6785★	35
3.310	3.316	.500			
84,72	*85,00*	*12,00*	*S*	∗63X85X12★	32
3.335	3.346	.472			
85,00	*85,27*	*7,00*	*S*	63X85X7★	32
3.346	3.357	.276			
85,00	*85,28*	*10,00*	*S*	63X85X10★	32
3.346	3.357	.394			
87,72	*88,00*	*12,00*	*S*	∗63X88X12★	32
3.454	3.465	.472			
88,00	*88,20*	*8,00*	*S*	∗63X88X8★	32
3.465	3.472	.315			
89,72	*90,00*	*12,00*	*S*	∗63X90X12★	32
3.532	3.543	.472			
90,00	*90,14*	*10,00*	*S*	63X90X10★	32
3.543	3.549	.394			
90,00	*90,27*	*7,00*	*S*	63X90X7★	32
3.543	3.554	.276			
90,00	*90,10*	*7,00*	*S*	1935★	47
3.543	3.554	.276			
99,72	*100,00*	*10,00*	*S*	∗63X100X10★	32
3.926	3.937	.394			
99,72	*100,00*	*13,00*	*S*	∗63X100X13★	32
3.926	3.937	.512			

Hsg. Bore	Seal O.D.	Seal Width	Lip Mat'l	Part No.	Type/ Illus.
2.485" SHAFT					
–	–	–	S	800650	VRS1
–	–	–	V	800654	VRS1
3.165	–	.188	U	710042	#
2.496" SHAFT					
–	–	–	S	800650	VRS1
–	–	–	V	800654	VRS1
3.243	3.248	.420	S	∗4101	#
3.245	3.248	.485	S	5109	#
3.672	3.772	.315	S	200851%	200E
3.715	3.745	.315	S	∗200888%	200E
2.500" (2-1/2") SHAFT					
–	–	–	S	800650	VRS1
–	–	–	V	800654	VRS1
-	**-**	**.500**		**99248**	**Redi-Sleeve**
-	**-**	**.555**		**99253**	**Redi-Sleeve**
-	**-**	**.781**		**99250**	**Redi-Sleeve**
–	5.371	1.343	S	∗9014	#
3.000	–	.313	U	710027	#
3.000	–	.313	U	∗710033	#
3.000	–	.375	U	710034	#
3.000	3.005	.250	L	40555	4L
3.000	3.005	.250	S	40555S	4S
3.125	3.130	.250	S	43290S	4S
3.125	3.130	.250	S	∗313290	31
3.125	3.130	.547	N	∗9946N	#
3.130	3.135	.315	T	39803➡	FW-H
3.148	3.154	.250	S	40337S	4S
3.150	3.155	.315	N	473476➡	47
3.189	**3.194**	**.375**	**S**	**472029**	**47**
3.189	3.194	.375	S	∗482029	48
3.189	3.194	.437	S	∗450323	45
3.189	3.194	.437	V	∗450323V	45
3.226	3.231	.190	S	3942&	284
3.247	**3.252**	**.500**	**S**	**410752**	**41**
3.250	3.255	.375	U	710018	#
3.250	3.256	.437	H	∗411509H	41
3.250	3.256	.437	N	∗411509N	41
3.250	3.256	.437	V	∗411509V	41
3.250	3.256	.437	S	∗451509	45
3.250	3.256	.437	H	∗451509H	45
3.250	3.256	.437	S	∗471509	47
3.250	3.256	.437	V	∗471509V	47
3.250	3.256	.437	S	∗481509	48
3.250	3.256	.437	H	∗481509H	48
3.251	3.256	.250	S	∗40519S	4S
3.251	3.256	.250	S	∗442110	44
3.251	3.256	.312	S	442380	44
3.251	3.256	.375	S	∗411271	41
3.251	3.256	.375	S	∗451271	45
3.251	**3.256**	**.375**	**S**	**471271**	**47**
3.251	3.256	.375	A	471271A	47
3.251	**3.256**	**.375**	**V**	**471271V**	**47**
3.251	3.256	.375	S	∗481271	48
3.251	3.256	.500	S	410519	41
3.251	3.256	.500	S	450519	45
3.251	3.256	.500	H	∗450519H	45
3.251	3.256	.500	N	∗450519N	45
3.251	3.256	.500	S	∗470519	47
3.251	3.256	.500	S	∗470519N	47
3.251	3.256	.500	S	∗480519	48
3.251	3.256	.500	N	∗480519N	48
3.251	3.256	.500	V	∗480519V	48
3.303	3.307	.465	S	4250⬅➡	74

SIZE SECTION

For Illustration and Material Data See Technical Section
Designed For A Specific Application - Not Recommended For General Use ➡ Hydrodynamic Lip Design-CW ⬅➡ Hydrodynamic Lip Design-Bidirectional % External Bore
& Flanged O.D. ∗ The U.S. customer service number is 877-4-TIMKEN. The Canadian customer service numbers are 800-565-4927 (English) and 800-565-0438 (French-Canadian).
★ Metric Seal

63,50mm (2.500") SHAFT

Hsg. Bore	Seal O.D.	Seal Width	Lip Mat'l	Part No.	Type/ Illus.
84,72	*85,00*	*12,00*	*S*	*63.5X85X12★	32
3.335	3.346	.472			

2.500" (2-1/2") SHAFT

Hsg. Bore	Seal O.D.	Seal Width	Lip Mat'l	Part No.	Type/ Illus.
3.350	3.355	.250	S	*40496S	4S
3.350	**3.355**	**.468**	**S**	**410496**	**41**
3.350	3.355	.468	S	450496	45
3.350	3.355	.468	S	*470496	47
3.350	3.355	.468	S	*480496	48
3.350	3.355	.468	N	*480496N	48
3.350	3.355	.718	S	*6860S	#
3.371	3.376	.375	S	*410605	41
3.371	3.376	.375	S	*450605	45
3.371	3.376	.375	H	*450605H	45
3.371	**3.376**	**.375**	**S**	**470605**	**47**
3.371	3.376	.375	S	*480605	48
3.371	3.376	.468	S	*410330	41
3.371	3.376	.468	N	*410330N	41
3.371	3.376	.468	S	*450330	45
3.371	3.376	.468	H	*450330H	45
3.371	3.376	.468	S	*470330	47
3.371	3.376	.468	N	*470330N	47
3.371	3.376	.468	S	*480330	48
3.371	3.435	.500	L	80330%	8L
3.428	**3.433**	**.375**	**S**	**473274**	**47**
3.428	3.433	.375	N	473274N	47
3.499	3.505	.500	V	3894V	48
3.500	3.504	.450	N	714670⬅	47
3.500	3.505	.250	S	444042	44
3.500	3.505	.375	N	*415345N	41
3.500	3.505	.375	V	*415345V	41
3.500	**3.505**	**.375**	**S**	**415449**	**41**
3.500	3.505	.375	A	415449A	41
3.500	3.505	.375	N	*415449N	41
3.500	**3.505**	**.375**	**V**	**415449V**	**41**
3.500	3.505	.375	S	*455449	45
3.500	3.505	.375	S	*475449	47
3.500	3.505	.375	S	*485449	48
3.500	3.505	.500	H	*2279➡	47
3.500	3.505	.500	H	7581H&	48
3.500	3.505	.500	S	415147	41
3.500	3.505	.500	N	415147N	41
3.500	3.505	.500	S	455147	45
3.500	3.505	.500	H	*455147H	45
3.500	3.505	.500	N	*455147N	45
3.500	3.505	.500	S	*475147	47
3.500	3.505	.500	N	*475147N	47
3.500	3.505	.500	S	*485147	48
3.500	3.505	.540	S	*3707	47
3.500	3.505	.687	N	*7773N	#
3.500	3.510	.475	T	*712121	#
3.543	**3.548**	**.500**	**S**	**415001**	**41**
3.543	3.548	.500	N	415001N	41
3.543	3.548	.500	S	455001	45
3.543	3.548	.500	S	475001	47
3.543	3.548	.500	N	*475001N	47
3.543	3.548	.500	S	*485001	48
3.548	3.553	.546	N	*2643N	#
3.623	3.628	.375	V	416273V	41
3.623	**3.628**	**.375**	**S**	**416273**	**41**
3.623	3.628	.375	S	*456273	45
3.623	3.628	.375	S	*476273	47
3.623	3.628	.375	S	*486273	48
3.623	3.628	.468	S	*415369	41
3.623	3.628	.468	H	*415369H	41
3.623	3.628	.468	N	*415369N	41
3.623	3.628	.468	S	455369	45
3.623	3.628	.468	S	*475369	47
3.623	3.628	.468	N	*475369N	47
3.623	3.628	.468	S	*485369	48
3.750	3.759	.250	S	*345887	34

2.500" (2-1/2") SHAFT (cont.)

Hsg. Bore	Seal O.D.	Seal Width	Lip Mat'l	Part No.	Type/ Illus.
3.751	3.756	.500	S	*415079	41
3.751	**3.756**	**.500**	**S**	**455079**	**45**
3.751	3.756	.500	V	*455079V	45
3.751	3.756	.500	S	*475079	47
3.751	3.756	.500	S	*485079	48
3.876	3.881	.375	S	*446631	44
3.876	**3.881**	**.468**	**S**	**415082**	**41**
3.876	3.881	.468	N	415082N	41
3.876	3.881	.468	S	*455082	45
3.876	3.881	.468	S	*475082	47
3.876	3.881	.468	S	*485082	48
4.003	4.008	.468	S	*2108	45
4.003	4.008	.468	S	*415655	41
4.003	**4.008**	**.468**	**S**	**455655**	**45**
4.003	4.008	.468	S	*475655	47
4.003	4.008	.468	S	*485655	48
4.035	4.040	.634	V	4525V	87
4.035	4.042	.492	V	100727	#
4.250	4.260	.500	S	355732	35
4.500	6.125	.400	S	*7512S	51
4.500	6.125	.400	S	7512SSO	51
4.938	4.943	.500	N	3136N⬅➡	47

2.503" SHAFT

Hsg. Bore	Seal O.D.	Seal Width	Lip Mat'l	Part No.	Type/ Illus.
–	–	–	S	800650	VRS1
–	–	–	V	800654	VRS1
–	**–**	**.500**		**99248**	**Redi-Sleeve**
–	**–**	**.555**		**99253**	**Redi-Sleeve**
–	**–**	**.781**		**99250**	**Redi-Sleeve**
3.428	3.439	.709	V	4561V⬅	#
3.428	3.439	.800	V	*714561⬅	#
3.500	3.504	.450	N	*4670N⬅	#
3.629	3.633	.900	N	*4624N&	86
3.629	3.633	.900	V	4624V&	86

2.512" SHAFT

Hsg. Bore	Seal O.D.	Seal Width	Lip Mat'l	Part No.	Type/ Illus.
–	–	–	S	800650	VRS1
–	–	–	V	800654	VRS1
–	**–**	**.781**		***99251**	**Redi-Sleeve**
3.506	3.510	.290	S	8975S	49

64,00mm (2.520") SHAFT

Hsg. Bore	Seal O.D.	Seal Width	Lip Mat'l	Part No.	Type/ Illus.
–	–	–	S	800650	VRS1
–	–	–	V	800654	VRS1
76,00	*76,20*	*7,00*	*S*	710256★	#
2.992	3.000	.276			
77,00	*77,20*	*8,00*	*S*	710130★	#
3.031	3.039	.315			
79,72	*80,00*	*12,00*	*S*	*64X80X12★	32
3.139	3.150	.472			
79,72	*80,00*	*13,00*	*S*	*64X80X13★	32
3.139	3.150	.512			
80,00	*80,20*	*8,00*	*H*	226480★⬅	33
3.150	3.157	.315			
80,00	*80,28*	*8,00*	*S*	64X80X8★	32
3.150	3.161	.315			
84,72	*85,00*	*10,00*	*S*	*64X85X10★	32
3.335	3.346	.394			
84,72	*85,00*	*12,00*	*S*	*64X85X12★	32
3.335	3.346	.472			
90,00	*90,28*	*13,00*	*S*	*64X90X13★	32
3.543	3.554	.512			
119,72	*120,00*	*12,00*	*S*	*64X120X12★	32
4.713	4.724	.472			
132,00	*132,10*	*13,00*	*N*	710277★	#
5.197	5.201	.512			

For Illustration and Material Data See Technical Section
Designed For A Specific Application - Not Recommended For General Use ➡ Hydrodynamic Lip Design-CW ⬅ Hydrodynamic Lip Design-CCW
⬅➡ Hydrodynamic Lip Design-Bidirectional % External Bore & Flanged O.D.
* The U.S. customer service number is 877-4-TIMKEN. The Canadian customer service numbers are 800-565-4927 (English) and 800-565-0438 (French-Canadian). ★ Metric Seal

Hsg. Bore	Seal O.D.	Seal Width	Lip Mat'l	Part No.	Type/ Illus.
2.531" (2-17/32") SHAFT					
–	–	–	S	800650	VRS1
–	–	–	V	800654	VRS1
4.540	6.125	.500	S	7154S	#
2.556" SHAFT					
–	–	–	S	800650	VRS1
–	–	–	V	800654	VRS1
–	**–**	**.787**		**99254**	**Redi-Sleeve**
3.937	**3.942**	**.375**	**S**	**476514**	**47**
65,00mm (2.559") SHAFT					
–	–	–	S	800650	VRS1
–	–	–	V	800654	VRS1
–	**–**	**.787**		**99254**	**Redi-Sleeve**
74,75	*75,00*	*8,00*	*S*	*65X75X8★	32
2.943	2.953	.315			
74,75	*75,00*	*10,00*	*S*	*65X75X10★	32
2.943	2.953	.394			
74,75	*75,00*	*12,00*	*S*	*65X75X12★	32
2.943	2.953	.472			
77,72	*78,00*	*12,00*	*S*	*65X78X12★	32
3.060	3.071	.472			
79,72	*80,00*	*10,00*	*S*	*65X80X10★	32
3.139	3.150	.394			
79,72	*80,00*	*12,00*	*S*	*65X80X12★	32
3.139	3.150	.472			
80,00	*80,20*	*8,00*	*V*	*65X80X8V★	32
3.150	3.157	.315			
80,00	*80,28*	*8,00*	*S*	65X80X8★	32
3.150	3.161	.315			
81,00	*81,28*	*7,00*	*N*	226510★➡	32
3.189	3.200	.276			
81,72	*82,00*	*9,00*	*S*	*65X82X9★	32
3.217	3.228	.354			
81,72	*82,00*	*12,00*	*S*	*65X82X12★	32
3.217	3.228	.472			
82,00	*82,09*	*8,00*	*S*	710094★	66
3.228	3.232	.315			
82,00	*82,20*	*8,00*	*S*	*65X82X8★	32
3.228	3.236	.315			
84,00	*84,30*	*9,00*	*H*	712005★➡	32
3.307	3.319	.354			
84,72	*85,00*	*12,00*	*S*	*65X85X12★	32
3.335	3.346	.472			
84,72	*85,00*	*13,00*	*S*	*65X85X13★	32
3.335	3.346	.512			
85,00	*85,10*	*10,00*	*S*	710373★	47
3.346	3.350	.394			
85,00	*85,20*	*8,00*	*S*	65X85X8★	35
3.346	3.354	.315			
85,00	*85,20*	*8,00*	*V*	*65X85X8V★	35
3.346	3.354	.315			
85,00	*85,27*	*10,00*	*S*	226520★	35
3.346	3.357	.394			
85,00	*85,27*	*10,00*	*S*	65X85X10★	32
3.346	3.357	.394			
87,72	*88,00*	*12,00*	*S*	*65X88X12★	32
3.454	3.465	.472			
87,72	*88,00*	*13,00*	*S*	*65X88X13★	32
3.454	3.465	.512			
88,00	*88,20*	*8,00*	*S*	65X88X8★	35
3.465	3.472	.315			
88,00	*88,20*	*10,00*	*S*	65X88X10★	32
3.465	3.472	.394			
88,00	*88,20*	*12,00*	*S*	710367★➡	40
3.465	3.472	.472			
89,72	*90,00*	*8,00*	*S*	*65X90X8★	32
3.532	3.543	.315			
65,00mm (2.559") SHAFT (cont.)					
89,72	*90,00*	*12,00*	*S*	*65X90X12★	32
3.532	3.543	.472			
90,00	*90,20*	*7,00*	*S*	65X90X7★	32
3.543	3.551	.276			
90,00	*90,20*	*10,00*	*V*	*65X90X10V★	32
3.543	3.551	.394			
90,00	*90,20*	*13,00*	*S*	65X90X13★	35
3.543	3.551	.512			
90,00	*90,28*	*10,00*	*S*	226530★	35
3.543	3.554	.394			
90,00	*90,28*	*10,00*	*S*	65X90X10★	32
3.543	3.554	.394			
94,72	*95,00*	*10,00*	*S*	*65X95X10★	32
3.729	3.740	.394			
94,72	*95,00*	*12,00*	*S*	*65X95X12★	32
3.729	3.740	.472			
94,72	*95,00*	*13,00*	*S*	*65X95X13★	32
3.729	3.740	.512			
94,72	*95,00*	*14,00*	*S*	*65X95X14★	32
3.729	3.740	.551			
95,00	***95,20***	***7,00***	***S***	***65X95X7★***	**32**
3.740	**3.748**	**.276**			
95,00	*95,20*	*8,00*	*S*	*65X95X8★	32
3.740	3.748	.315			
99,72	*100,00*	*9,50*	*S*	*65X100X9.5★	32
3.926	3.937	.374			
99,72	*100,00*	*12,00*	*S*	*65X100X12★	32
3.926	3.937	.472			
99,72	*100,00*	*13,00*	*S*	*65X100X13★	32
3.926	3.937	.512			
100,00	*100,20*	*10,00*	*V*	*65X100X10V★	35
3.937	3.945	.394			
100,00	*100,28*	*10,00*	*S*	65X100X10★	35
3.937	3.948	.394			
100,00	*100,30*	*7,00*	*S*	65X100X7★	32
3.937	3.949	.276			
101,72	*102,00*	*13,00*	*S*	*65X102X13★	32
4.005	4.016	.512			
104,72	*105,00*	*12,00*	*S*	*65X105X12★	32
4.123	4.134	.472			
105,00	*105,20*	*8,00*	*S*	*65X105X8★	32
4.134	4.142	.315			
109,72	*110,00*	*10,00*	*S*	*65X110X10★	32
4.320	4.331	.394			
109,72	*110,00*	*12,00*	*S*	*65X110X12★	32
4.320	4.331	.472			
109,72	*110,00*	*13,00*	*S*	*65X110X13★	32
4.320	4.331	.512			
110,00	*110,20*	*8,00*	*S*	*65X110X8★	32
4.331	4.339	.315			
114,72	*115,00*	*12,00*	*S*	*65X115X12★	32
4.517	4.528	.472			
114,72	*115,00*	*13,00*	*S*	*65X115X13★	32
4.517	4.528	.512			
115,00	*115,20*	*8,00*	*S*	*65X115X8★	32
4.528	4.535	.315			
119,72	*120,00*	*13,00*	*S*	*65X120X13★	32
4.713	4.724	.512			
120,00	*120,20*	*8,00*	*S*	*65X120X8★	32
4.724	4.732	.315			
139,70	*140,00*	*14,00*	*S*	*65X140X14★	32
5.500	5.512	.551			
2.561" SHAFT					
.000	3.979	.532	S	710519	#
2.562" (2-9/16") SHAFT					
–	–	–	S	800650	VRS1
–	–	–	V	800654	VRS1
–	**–**	**.781**		**99256**	**Redi-Sleeve**

For Illustration and Material Data See Technical Section
Designed For A Specific Application - Not Recommended For General Use ➡ Hydrodynamic Lip Design-CW
* The U.S. customer service number is 877-4-TIMKEN. The Canadian customer service numbers are 800-565-4927 (English) and 800-565-0438 (French-Canadian). ★ Metric Seal

2.562" (2-9/16") SHAFT (cont.)

Hsg. Bore	Seal O.D.	Seal Width	Lip Mat'l	Part No.	Type/ Illus.
–	**–**	**.787**		**99254**	**Redi-Sleeve**
3.090	3.095	.375	S	5123	280
3.371	3.376	.468	S	*470961	47
3.481	3.486	.375	S	413479	41
3.481	3.486	.500	S	*450904	45
3.500	**3.505**	**.375**	**S**	**415302**	**41**
3.500	3.505	.500	S	*415098	41
3.500	3.505	.500	N	415098N	41
3.500	3.505	.500	S	*455098	45
3.500	3.505	.500	H	*455098H	45
3.500	3.505	.500	N	*455098N	45
3.500	3.505	.500	S	*475098	47
3.543	3.548	.500	S	455311	45
3.623	**3.628**	**.375**	**S**	**415988**	**41**
3.623	3.628	.468	S	*415002	41
3.623	3.628	.468	H	*415002H	41
3.623	3.628	.468	S	*455002	45
3.623	3.628	.468	S	*475002	47
3.623	3.628	.468	N	*475002N	47
3.623	3.628	.468	S	*485002	48
3.623	3.628	.500	S	*456619	45
3.624	3.629	.703	S	*415972	41
3.727	**3.777**	**.490**	**S**	**9943%**	**Redi-Sleeve**
3.750	**3.756**	**.375**	**S**	**417481**	**41**
3.750	3.756	.500	S	*455244	45
3.751	3.756	.500	S	*415244	41
3.751	3.756	.500	N	*415244N	41
3.751	3.756	.500	H	*455244H	45
3.751	3.756	.500	N	*455244N	45
3.876	**3.881**	**.468**	**S**	**455280**	**45**

66,00mm (2.598") SHAFT

Hsg. Bore	Seal O.D.	Seal Width	Lip Mat'l	Part No.	Type/ Illus.
–	–	–	S	800650	VRS1
–	–	–	V	800654	VRS1
–	**–**	**.781**		**99259**	**Redi-Sleeve**
80,00	*80,11*	*9,00*	*N*	226610★	41
3.150	3.154	.354			
85,00	*85,12*	*10,00*	*S*	710092★	41
3.346	3.351	.394			
3.481	3.486	.500	S	411330	41
3.481	**3.486**	**.500**	**N**	**411330N**	**41**
3.999	4.004	.730	S	*2177	#
3.999	4.004	.780	S	712598	47
4.000	**4.005**	**.500**	**S**	**477069**	**47**

2.609" SHAFT

Hsg. Bore	Seal O.D.	Seal Width	Lip Mat'l	Part No.	Type/ Illus.
–	–	–	S	800650	VRS1
–	–	–	V	800654	VRS1
3.350	3.355	.375	S	*450725	45
3.350	3.355	.375	H	*450725H	45
3.350	3.355	.375	N	*450725N	45

2.625" (2-5/8") SHAFT

Hsg. Bore	Seal O.D.	Seal Width	Lip Mat'l	Part No.	Type/ Illus.
–	–	–	S	800650	VRS1
–	–	–	V	800654	VRS1
–	**–**	**.500**		**99260**	**Redi-Sleeve**
–	**–**	**.781**		**99262**	**Redi-Sleeve**
–	**–**	**.781**		***99264**	**Redi-Sleeve**
–	5.030	.200	S	*6405	#
3.251	3.256	.437	N	411143N	41
3.251	**3.256**	**.437**	**S**	**451143**	**45**
3.251	3.256	.437	N	*471143N	47
3.350	**3.355**	**.375**	**S**	**412871**	**41**
3.350	3.355	.453	F	*6081	29
3.350	3.356	.468	S	450329	45
3.350	3.356	.468	H	*450329H	45

2.625" (2-5/8") SHAFT (cont.)

Hsg. Bore	Seal O.D.	Seal Width	Lip Mat'l	Part No.	Type/ Illus.
3.350	3.356	.468	S	*480329	48
3.350	3.356	.468	N	*480329N	48
3.351	3.356	.500	S	*452624	45
3.371	3.376	.250	S	440511	44
3.371	**3.376**	**.375**	**S**	**413248**	**41**
3.371	3.376	.375	S	*453248	45
3.371	3.376	.375	S	*473248	47
3.371	3.376	.375	S	*483248	48
3.371	3.376	.468	S	*410626	41
3.371	3.376	.468	N	*410626N	41
3.371	3.376	.468	S	450626	45
3.371	3.376	.468	S	*480626	48
3.374	**3.379**	**.468**	**S**	**410708**	**41**
3.375	3.390	.375	T	712101➡	FW-H
3.481	**3.486**	**.500**	**S**	**450412**	**45**
3.484	3.489	.250	S	43077S	4S
3.500	**3.505**	**.375**	**S**	**415483**	**41**
3.500	3.505	.375	S	*455483	45
3.500	3.505	.375	S	*475483	47
3.500	3.505	.375	S	*485483	48
3.500	3.505	.500	S	*415368	41
3.500	3.505	.500	N	*415368N	41
3.500	3.505	.500	S	455368	45
3.500	3.505	.500	N	*455368N	45
3.500	3.505	.500	S	*475368	47
3.500	3.505	.500	N	475368N	47
3.500	3.505	.500	S	*485368	48
3.516	3.533	.394	T	712103➡	PDW
3.531	3.536	.812	S	*8561	2S
3.543	**3.548**	**.375**	**S**	**417079**	**41**
3.543	3.548	.500	S	*411475	41
3.543	3.548	.500	N	*411475N	41
3.543	3.548	.500	S	*451475	45
3.543	3.548	.500	S	*471475	47
3.543	3.548	.500	S	*481475	48
3.623	**3.628**	**.375**	**S**	**415458**	**41**
3.623	3.628	.375	A	415458A	41
3.623	**3.628**	**.375**	**V**	**415458V**	**41**
3.623	3.628	.375	S	*455458	45
3.623	3.628	.375	S	475458	47
3.623	3.628	.375	V	*475458V	47
3.623	3.628	.375	S	*485458	48
3.623	3.628	.468	V	*3440V	#
3.623	3.628	.468	S	415003	41
3.623	3.628	.468	N	*415003N	41
3.623	3.628	.468	V	*415003V	41
3.623	3.628	.468	S	455003	45
3.623	3.628	.468	N	*455003N	45
3.623	3.628	.468	S	*475003	47
3.623	3.628	.468	N	475003N	47
3.623	3.628	.468	S	485003	48
3.623	3.628	.468	V	*485003V	48
3.623	3.629	.500	S	*455911	45
3.625	3.630	.600	N	*3350	#
3.660	3.960	.320	S	*200919%	200E
3.695	3.700	.500	H	3813	64
3.696	3.700	.500	T	41163T➡	FW-H
3.749	3.755	.586	S	*8020S	41
3.751	**3.756**	**.375**	**S**	**417343**	**41**
3.751	3.756	.375	S	*457343	45
3.751	3.756	.375	S	*477343	47
3.751	3.756	.375	S	*487343	48
3.751	3.756	.500	S	*415149	41
3.751	3.756	.500	V	*415149V	41
3.751	3.756	.500	S	*455149	45
3.751	3.756	.500	S	*475149	47
3.751	3.756	.500	N	*475149N	47
3.751	3.756	.500	S	*485149	48
3.751	3.756	.875	S	*75149S	7S
3.813	3.818	.415	S	200392	200
3.876	3.881	.437	S	*417483	41
3.876	**3.881**	**.468**	**S**	**415007**	**41**

For Illustration and Material Data See Technical Section
Designed For A Specific Application - Not Recommended For General Use ➡ Hydrodynamic Lip Design-CW % External Bore
* The U.S. customer service number is 877-4-TIMKEN. The Canadian customer service numbers are 800-565-4927 (English) and 800-565-0438 (French-Canadian). ★ Metric Seal

Hsg. Bore	Seal O.D.	Seal Width	Lip Mat'l	Part No.	Type/ Illus.
2.625" (2-5/8") SHAFT (cont.)					
3.876	3.881	.468	S	*455007	45
3.876	3.881	.468	S	*475007	47
3.876	3.881	.468	S	*485007	48
4.003	**4.008**	**.375**	**S**	**417082**	**41**
4.003	4.008	.375	S	*487082	48
4.003	4.008	.468	S	*415296	41
4.003	4.008	.468	N	*415296N	41
4.003	4.008	.468	S	*455296	45
4.003	4.008	.468	S	*475296	47
4.003	4.008	.468	S	*485296	48
4.064	4.069	.960	N	712625	90
4.064	4.069	.990	N	*4037	#
4.249	**4.254**	**.468**	**S**	**416278**	**41**
4.252	4.256	1.156	S	*6982S	#
4.376	4.381	.500	V	*477586V	47
4.437	**4.441**	**.437**	**S**	**418027**	**41**
4.564	4.568	.718	N	9773&	74
2.634" SHAFT					
–	–	–	S	800650	VRS1
–	–	–	V	800654	VRS1
3.937	3.942	.375	S	*487658	48
67,00mm (2.638") SHAFT					
81,72	*82,00*	*7,00*	*S*	*67X82X7★	32
3.217	3.228	.276			
2.640" SHAFT					
–	–	–	S	800650	VRS1
–	–	–	V	800654	VRS1
4.450	4.490	.250	S	*6846S	#
2.648" SHAFT					
–	–	–	S	800650	VRS1
–	–	–	V	800654	VRS1
3.812	3.817	.500	S	486857	48
2.667" SHAFT					
–	–	–	S	800650	VRS1
–	–	–	V	800654	VRS1
3.751	3.756	.500	L	7780	4L
3.751	3.756	.500	L	7780N	4L
3.751	3.756	.500	S	*447441	44
68,00mm (2.677") SHAFT					
–	–	–	S	800650	VRS1
–	–	–	V	800654	VRS1
82,00	*82,20*	*7,00*	*S*	68X82X7★	32
3.228	3.236	.276			
82,00	*82,20*	*7,00*	*S*	710378★	35
3.228	3.236	.276			
84,00	*84,23*	*8,50*	*N*	710234★⬅	32
3.307	3.316	.335			
84,72	*85,00*	*10,00*	*S*	*68X85X10★	32
3.335	3.346	.394			
85,00	*85,20*	*8,00*	*S*	68X85X8★	35
3.346	3.354	.315			
86,00	*86,20*	*8,00*	*N*	710334★⬅	32
3.386	3.394	.315			
86,00	*86,31*	*8,00*	*H*	226820★➡	32
3.386	3.398	.315			
88,00	*88,20*	*8,00*	*S*	*68X88X8★	32
3.465	3.472	.315			
88,00	*88,20*	*8,00*	*S*	710446★➡	35
3.465	3.472	.315			
89,00	*89,20*	*11,00*	*V*	712511★➡	32
3.504	3.512	.433			
68,00mm (2.677") SHAFT (cont.)					
89,72	*90,00*	*8,00*	*S*	*68X90X8★	32
3.532	3.543	.315			
89,72	*90,00*	*12,00*	*S*	*68X90X12★	32
3.532	3.543	.472			
89,72	*90,00*	*13,00*	*S*	*68X90X13★	32
3.532	3.543	.512			
90,00	*90,10*	*12,00*	*S*	710440★	47
3.543	3.547	.472			
90,00	*90,15*	*10,00*	*T*	712108★➡	FW-H
3.543	3.549	.394			
90,00	*90,20*	*7,00*	*S*	68X90X7★	32
3.543	3.551	.276			
90,00	*90,20*	*10,00*	*V*	*68X90X10V★	32
3.543	3.551	.394			
90,00	*90,32*	*10,00*	*S*	68X90X10★	32
3.543	3.556	.394			
94,72	*95,00*	*13,00*	*S*	*68X95X13★	32
3.729	3.740	.512			
95,00	*95,20*	*8,00*	*S*	*68X95X8★	32
3.740	3.748	.315			
95,00	*95,20*	*10,00*	*S*	68X95X10★	35
3.740	3.748	.394			
95,00	*95,28*	*7,00*	*S*	68X95X7★	32
3.740	3.751	.276			
95,00	*95,30*	*13,00*	*V*	226840★	#
3.740	3.752	.512			
97,72	*98,00*	*10,00*	*S*	*68X98X10★	32
3.847	3.858	.394			
99,72	*100,00*	*12,00*	*S*	*68X100X12★	32
3.926	3.937	.472			
100,00	*100,20*	*10,00*	*S*	68X100X10★	35
3.937	3.945	.394			
100,00	*100,28*	*7,00*	*S*	68X100X7★	32
3.937	3.948	.276			
100,00	*100,28*	*13,00*	*S*	68X100X13★	32
3.937	3.948	.512			
124,00	*124,10*	*12,00*	*N*	710275★⬅	40
4.882	4.886	.472			
2.687" (2-11/16") SHAFT					
–	–	–	S	800700	VRS1
–	–	–	V	800704	VRS1
3.062	3.062	.187	S	*6542%	36
3.251	3.256	.578	S	*6532S	273
3.500	**3.505**	**.500**	**S**	**455434**	**45**
3.751	**3.756**	**.500**	**S**	**455151**	**45**
3.751	3.756	.500	S	*485151	48
3.876	3.876	.250	S	365008%	36
3.876	**3.881**	**.468**	**S**	**455008**	**45**
2.700" SHAFT					
–	–	–	S	800700	VRS1
–	–	–	V	800704	VRS1
3.499	3.504	.462	S	710091&	272
69,00mm (2.717") SHAFT					
–	–	–	S	800700	VRS1
–	–	–	V	800704	VRS1
91,72	*92,00*	*12,00*	*S*	*69X92X12★	32
3.611	3.622	.472			
2.735" SHAFT					
–	–	–	S	800700	VRS1
–	–	–	V	800704	VRS1
3.415	–	.188	U	710039	#
2.740" SHAFT					
3.937	3.942	.565	S	*370155A	06

For Illustration and Material Data See Technical Section
Designed For A Specific Application - Not Recommended For General Use ➡ Hydrodynamic Lip Design-CW ⬅ Hydrodynamic Lip Design-CCW % External Bore
& Flanged O.D. * The U.S. customer service number is 877-4-TIMKEN. The Canadian customer service numbers are 800-565-4927 (English) and 800-565-0438 (French-Canadian).
★ Metric Seal

2.748" SHAFT

Hsg. Bore	Seal O.D.	Seal Width	Lip Mat'l	Part No.	Type/ Illus.
–	–	–	S	800700	VRS1
–	–	–	V	800704	VRS1
–	**–**	**.781**		***99270**	**Redi-Sleeve**
–	**–**	**.781**		**99274**	**Redi-Sleeve**
–	**–**	**1.438**		**99267**	**Redi-Sleeve**
3.543	3.555	.591	N	4874N⬅	#
3.876	3.886	.552	V	4564V➡	#
3.881	3.885	.464	S	710174	47
3.937	3.942	.305	S	*200122	200
5.500	5.512	.850	N	4876N➡	#

2.750" (2-3/4") SHAFT

Hsg. Bore	Seal O.D.	Seal Width	Lip Mat'l	Part No.	Type/ Illus.
–	–	–	S	800700	VRS1
–	–	–	V	800704	VRS1
–	**–**	**.406**		**99272**	**Redi-Sleeve**
–	**–**	**.781**		***99270**	**Redi-Sleeve**
–	**–**	**.781**		**99274**	**Redi-Sleeve**
–	**–**	**.781**		**99275**	**Redi-Sleeve**
–	**–**	**1.125**		**99269**	**Redi-Sleeve**
–	**–**	**1.438**		**99267**	**Redi-Sleeve**
–	6.200	.700	S	6643S	52
3.125	3.130	.187	S	310841	31
3.250	–	.312	U	710038	#
3.481	3.486	.500	S	480491	48
3.500	3.505	.250	S	*315364	31
3.500	3.505	.250	H	*315364H	31
3.500	3.505	.375	V	416664V	41
3.500	**3.505**	**.375**	**S**	**416664**	**41**
3.500	3.505	.375	S	*456664	45
3.500	3.505	.375	S	*476664	47
3.500	3.505	.375	S	*486664	48
3.500	3.505	.500	S	*415364	41
3.500	3.505	.500	H	*415364H	41
3.500	3.505	.500	S	455364	45
3.500	3.505	.500	N	*455364N	45
3.500	3.505	.500	S	*475364	47
3.500	3.505	.500	S	*485364	48
3.500	3.505	.500	H	*485364H	48
3.500	3.505	.500	N	485364N	48
3.500	3.505	.567	N	*256936N	25
3.501	3.505	.250	S	45827S	4S
3.538	**3.543**	**.437**	**S**	**457291**	**45**
3.538	3.543	.500	S	*455872	45
3.538	3.543	.500	V	*455872V	45
3.543	3.548	.375	S	417484	41
3.543	**3.548**	**.375**	**N**	**417484N**	**41**
3.543	3.548	.500	V	4492	#
3.543	3.548	.500	S	415322	41
3.543	3.548	.500	N	*415322N	41
3.543	3.548	.500	V	415322V	41
3.543	3.548	.500	S	455322	45
3.543	3.548	.500	N	455322N	45
3.543	3.548	.500	V	455322V	45
3.543	3.548	.500	S	*475322	47
3.543	3.548	.500	N	475322N	47
3.543	3.548	.500	S	*485322	48
3.543	3.549	.500	V	*100266V⬅	#
3.623	**3.628**	**.375**	**S**	**415984**	**41**
3.623	3.628	.375	S	*455984	45
3.623	3.628	.375	S	*475984	47
3.623	3.628	.375	N	*475984N	47
3.623	3.628	.375	S	*485984	48
3.623	3.628	.468	S	*415315	41
3.623	3.628	.468	N	*415315N	41
3.623	3.628	.468	S	*455315	45
3.623	3.628	.468	N	*455315N	45

2.750" (2-3/4") SHAFT (cont.)

Hsg. Bore	Seal O.D.	Seal Width	Lip Mat'l	Part No.	Type/ Illus.
3.623	3.628	.468	V	*455315V	45
3.623	3.628	.468	S	*475315	47
3.623	3.628	.468	S	*485315	48
3.623	3.628	.500	S	*456876	45
3.750	3.754	.500	U	710010	#
3.751	3.756	.250	S	46997S	4S
3.751	3.756	.375	V	417316V	41
3.751	**3.756**	**.375**	**S**	**417316**	**41**
3.751	3.756	.375	N	*417316N	41
3.751	3.756	.375	S	*457316	45
3.751	3.756	.375	S	*477316	47
3.751	3.756	.375	H	*477316H	47
3.751	3.756	.375	S	*487316	48
3.751	3.756	.437	S	*415733	41
3.751	3.756	.437	S	*475733	47
3.751	3.756	.500	S	415004	41
3.751	3.756	.500	H	*415004H	41
3.751	3.756	.500	N	*415004N	41
3.751	3.756	.500	V	415004V	41
3.751	3.756	.500	S	455004	45
3.751	3.756	.500	H	*455004H	45
3.751	3.756	.500	N	*455004N	45
3.751	3.756	.500	S	*475004	47
3.751	3.756	.500	H	475004H	47
3.751	3.756	.500	N	*475004N	47
3.751	3.756	.500	S	*485004	48
3.773	3.781	.435	S	2222&	286
3.779	3.784	.762	S	710395	06
3.779	3.792	.767	S	370352A	08
3.846	3.928	.290	S	200942%	200E
3.876	**3.881**	**.375**	**S**	**415960**	**41**
3.876	3.881	.375	S	*455960	45
3.876	3.881	.375	S	*475960	47
3.876	3.881	.375	S	*485960	48
3.876	3.881	.468	S	415009	41
3.876	3.881	.468	N	415009N	41
3.876	3.881	.468	S	455009	45
3.876	3.881	.468	N	*455009N	45
3.876	3.881	.468	S	*475009	47
3.876	3.881	.468	N	475009N	47
3.876	3.881	.468	S	*485009	48
3.876	3.882	.500	S	*455719	45
3.935	3.940	.500	S	55469	5L
3.937	3.942	.500	N	476574N	47
4.003	**4.008**	**.375**	**S**	**416706**	**41**
4.003	4.008	.375	H	*416706H	41
4.003	4.008	.375	N	*476706N	47
4.003	4.008	.468	S	*415272	41
4.003	4.008	.468	N	415272N	41
4.003	4.008	.468	S	455272	45
4.003	4.008	.468	S	*475272	47
4.003	4.008	.468	N	*475272N	47
4.003	4.008	.468	S	*485272	48
4.003	4.008	.500	V	*4490	#
4.125	4.130	.437	N	*487678N	48
4.125	4.130	.562	N	*456281N	45
4.125	4.130	.562	S	476281	47
4.125	4.130	.562	N	*476281N	47
4.125	4.130	.562	N	*486281N	48
4.125	4.130	.562	V	*486281V	48
4.249	**4.254**	**.468**	**S**	**416282**	**41**
4.249	4.254	.468	S	*456282	45
4.249	4.254	.468	S	*476282	47
4.249	4.254	.500	S	*416283	41
4.249	4.254	.500	S	*476283	47
4.249	4.254	.500	N	476283N	47
4.249	4.254	.625	S	*415101	41
4.331	4.336	.500	S	*416961	41
4.331	4.336	.500	N	*416961N	41
4.375	4.380	.625	N	*487384N	48
4.500	4.505	.468	S	454088	45
4.626	4.631	.625	N	*475139N	47

For Illustration and Material Data See Technical Section
Designed For A Specific Application - Not Recommended For General Use ➡ Hydrodynamic Lip Design-CW ⬅ Hydrodynamic Lip Design-CCW % External Bore
& Flanged O.D. * The U.S. customer service number is 877-4-TIMKEN. The Canadian customer service numbers are 800-565-4927 (English) and 800-565-0438 (French-Canadian).

Hsg. Bore	Seal O.D.	Seal Width	Lip Mat'l	Part No.	Type/ Illus.
2.750" (2-3/4") SHAFT (cont.)					
4.999	5.004	.468	L	55238	5L
5.500	5.506	.500	N	417986N	41
5.501	5.506	1.266	N	3591	90
2.752" SHAFT					
3.937	3.942	.565	S	∗370127A	#
70,00mm (2.756") SHAFT					
–	–	–	S	800700	VRS1
–	–	–	V	800704	VRS1
–	**–**	**.406**		**99272**	**Redi-Sleeve**
–	**–**	**.781**		**99275**	**Redi-Sleeve**
–	**–**	**.787**		**99276**	**Redi-Sleeve**
–	**–**	**1.125**		**99269**	**Redi-Sleeve**
79,72	*80,00*	*10,00*	*S*	∗70X80X10★	32
3.139	3.150	.394			
82,72	*83,00*	*10,00*	*S*	∗70X83X10★	32
3.257	3.268	.394			
84,72	*85,00*	*9,00*	*S*	∗70X85X9★	32
3.335	3.346	.354			
84,72	*85,00*	*10,00*	*S*	∗70X85X10★	32
3.335	3.346	.394			
85,00	*85,28*	*8,00*	*S*	70X85X8★	35
3.346	3.357	.315			
86,72	*87,00*	*10,00*	*S*	∗70X87X10★	32
3.414	3.425	.394			
87,00	*87,40*	*8,50*	*V*	1021★⬅	32
3.425	3.441	.335			
87,00	*87,40*	*8,50*	*V*	1021V★⬅	32
3.425	3.441	.335			
87,72	*88,00*	*10,00*	*S*	∗70X88X10★	32
3.454	3.465	.394			
88,00	*88,20*	*9,00*	*V*	∗70X88X9V★	35
3.465	3.472	.354			
88,00	*88,25*	*8,00*	*S*	70X88X8★	48
3.465	3.474	.315			
88,00	*88,25*	*12,00*	*S*	70X88X12★	32
3.465	3.474	.472			
88,00	*88,25*	*12,00*	*H*	227020★⬅	32
3.465	3.474	.472			
89,72	*90,00*	*8,00*	*S*	∗70X90X8★	32
3.532	3.543	.315			
89,72	*90,00*	*12,00*	*S*	∗70X90X12★	32
3.532	3.543	.472			
89,72	*90,00*	*13,00*	*S*	∗70X90X13★	32
3.532	3.543	.512			
90,00	*90,20*	*7,00*	*S*	70X90X7★	32
3.543	3.551	.276			
90,00	*90,20*	*10,00*	*V*	∗70X90X10V★	32
3.543	3.551	.394			
90,00	*90,32*	*10,00*	*S*	70X90X10★	32
3.543	3.556	.394			
90,00	*90,32*	*10,00*	*H*	227040★⬅	35
3.543	3.556	.394			
90,00	*90,40*	*10,00*	*S*	∗1162★	35
3.543	3.559	.394			
92,00	*92,15*	*11,90*	*H*	∗477936H★	47
3.622	3.628	.469			
92,00	*92,20*	*12,00*	*S*	70X92X12★	32
3.622	3.630	.472			
92,00	*92,23*	*12,00*	*H*	227045★	32
3.622	3.631	.472			
94,72	*95,00*	*12,00*	*S*	∗70X95X12★	32
3.729	3.740	.472			
95,00	*95,20*	*10,00*	*V*	∗70X95X10V★	35
3.740	3.748	.394			
95,00	*95,28*	*10,00*	*S*	70X95X10★	32
3.740	3.751	.394			
70,00mm (2.756") SHAFT (cont.)					
95,00	*95,28*	*13,00*	*S*	70X95X13★	35
3.740	3.751	.512			
99,72	*100,00*	*12,00*	*S*	∗70X100X12★	32
3.926	3.937	.472			
99,72	*100,00*	*14,00*	*S*	∗70X100X14★	32
3.926	3.937	.551			
100,00	*100,20*	*10,00*	*S*	70X100X10★	32
3.937	3.945	.394			
100,00	*100,20*	*10,00*	*V*	∗70X100X10V★	35
3.937	3.945	.394			
100,00	*100,28*	*13,00*	*S*	70X100X13★	32
3.937	3.948	.512			
101,60	*101,83*	*11,91*	*T*	40392★⬅	FW-H
4.000	4.009	.469			
101,72	*102,00*	*13,00*	*S*	∗70X102X13★	32
4.005	4.016	.512			
104,72	*105,00*	*12,00*	*S*	∗70X105X12★	32
4.123	4.134	.472			
105,00	*105,20*	*10,00*	*S*	∗70X105X10★	32
4.134	4.142	.394			
105,00	*105,20*	*13,00*	*S*	70X105X13★	35
4.134	4.142	.512			
105,00	*105,30*	*7,00*	*S*	70X105X7★	32
4.134	4.146	.276			
109,72	*110,00*	*12,00*	*S*	∗70X110X12★	32
4.320	4.331	.472			
109,72	*110,00*	*13,00*	*S*	∗70X110X13★	32
4.320	4.331	.512			
110,00	*110,20*	*10,00*	*S*	70X110X10★	35
4.331	4.339	.394			
111,72	*112,00*	*13,00*	*S*	∗70X112X13★	32
4.398	4.409	.512			
112,00	*112,10*	*14,00*	*S*	710339★	25
4.409	4.413	.551			
114,72	*115,00*	*13,00*	*S*	∗70X115X13★	32
4.517	4.528	.512			
114,72	*115,00*	*15,00*	*S*	∗70X115X15★	32
4.517	4.528	.591			
119,72	*120,00*	*13,00*	*S*	∗70X120X13★	32
4.713	4.724	.512			
71,00mm (2.795") SHAFT					
87,72	*88,00*	*8,00*	*S*	∗71X88X8★	32
3.454	3.465	.315			
2.812" (2-13/16") SHAFT					
–	–	–	S	800700	VRS1
–	–	–	V	800704	VRS1
–	**–**	**.594**		**99281**	**Redi-Sleeve**
3.500	3.510	.430	S	∗325978	32
3.751	**3.756**	**.500**	**S**	**455005**	**45**
3.751	3.756	.500	N	∗455005N	45
3.876	**3.881**	**.437**	**S**	**417485**	**41**
4.003	4.008	.468	S	∗455384	45
4.003	**4.008**	**.468**	**S**	**475384**	**47**
4.176	4.181	.551	S	∗4176	#
4.249	**4.254**	**.468**	**S**	**411348**	**41**
2.832" SHAFT					
–	–	–	S	800700	VRS1
–	–	–	V	800704	VRS1
3.625	3.635	.374	V	710075⬅	32
72,00mm (2.835") SHAFT					
–	–	–	S	800700	VRS1
–	–	–	V	800704	VRS1
0,00	*94,20*	*10,40*	*S*	710456★	#
.000	3.709	.409			

For Illustration and Material Data See Technical Section
Designed For A Specific Application - Not Recommended For General Use ⬅ Hydrodynamic Lip Design-CCW
∗ The U.S. customer service number is 877-4-TIMKEN. The Canadian customer service numbers are 800-565-4927 (English) and 800-565-0438 (French-Canadian). ★ Metric Seal

Hsg. Bore	Seal O.D.	Seal Width	Lip Mat'l	Part No.	Type/ Illus.
72,00mm (2.835") SHAFT (cont.)					
85,72	*86,00*	*7,50*	*S*	*72X86X7.5★	32
3.375	3.386	.295			
88,00	*88,25*	*8,00*	*S*	1986★	48
3.465	3.474	.315			
89,72	*90,00*	*8,00*	*S*	*72X90X8★	32
3.532	3.543	.315			
90,00	*90,20*	*10,00*	*S*	72X90X10★	35
3.543	3.551	.394			
91,72	*92,00*	*12,00*	*S*	*72X92X12★	32
3.611	3.622	.472			
93,72	*94,00*	*12,00*	*S*	*72X94X12★	32
3.690	3.701	.472			
94,72	*95,00*	*12,00*	*S*	*72X95X12★	32
3.729	3.740	.472			
94,72	*95,00*	*13,00*	*S*	*72X95X13★	32
3.729	3.740	.512			
95,00	*95,28*	*10,00*	*S*	72X95X10★	32
3.740	3.751	.394			
96,00	*96,28*	*9,00*	*H*	227235★⬅	32
3.780	3.791	.354			
100,00	*100,20*	*10,00*	*S*	72X100X10★	35
3.937	3.945	.394			
100,00	*100,31*	*12,00*	*S*	72X100X12★⬅➡	32
3.937	3.949	.472			
104,72	*105,00*	*13,00*	*S*	*72X105X13★	32
4.123	4.134	.512			
105,00	*105,20*	*10,00*	*S*	*72X105X10★	32
4.134	4.142	.394			
110,00	*110,20*	*10,00*	*S*	*72X110X10★	32
4.331	4.339	.394			
2.843" (2-27/32") SHAFT					
–	–	–	S	800700	VRS1
–	–	–	V	800704	VRS1
–	**–**	**.500**		**99282**	**Redi-Sleeve**
3.939	3.944	.495	S	2081⬅➡	41
3.939	3.944	.500	S	*55511S	5S
3.939	3.944	.500	S	*455511	45
4.003	4.008	.500	V	456837V	45
4.501	4.506	.375	S	*456111	45
2.860" SHAFT					
–	–	–	S	800700	VRS1
–	–	–	V	800704	VRS1
–	6.460	.520	S	*6479	#
73,00mm (2.874") SHAFT					
–	–	–	S	800700	VRS1
–	–	–	V	800704	VRS1
–	**–**	**.781**		**99287**	**Redi-Sleeve**
86,00	*86,28*	*5,00*	*S*	239129★	#
3.386	3.397	.197			
2.875" (2-7/8") SHAFT					
–	–	–	S	800700	VRS1
–	–	–	V	800704	VRS1
–	**–**	**.781**		**99287**	**Redi-Sleeve**
3.540	3.548	.315	S	474230	47
3.623	**3.628**	**.375**	**S**	**415303**	**41**
3.623	3.628	.375	S	*455303	45
3.623	3.628	.375	S	*475303	47
3.623	3.628	.375	S	*485303	48
3.623	3.628	.375	N	*485303N	48
3.623	3.628	.468	S	*416275	41
3.623	3.628	.468	N	*416275N	41
3.623	3.628	.468	S	*455250	45
3.623	3.628	.468	N	*455250N	45

Hsg. Bore	Seal O.D.	Seal Width	Lip Mat'l	Part No.	Type/ Illus.
2.875" (2-7/8") SHAFT (cont.)					
3.623	3.628	.500	H	3783	65
3.623	3.628	.500	T	39802➡	FW-H
3.740	3.746	.551	V	*488020V	48
3.750	3.755	.500	T	41536➡	PDW
3.750	3.755	.500	T	41537⬅	PDW
3.751	**3.756**	**.375**	**S**	**417344**	**41**
3.751	3.756	.375	S	*457344	45
3.751	3.756	.375	S	*477344	47
3.751	3.756	.375	V	*477344V	47
3.751	3.756	.375	S	*487344	48
3.751	3.756	.375	V	487344V	48
3.751	3.756	.500	S	*9711	41
3.751	3.756	.500	S	*415006	41
3.751	3.756	.500	N	*415006N	41
3.751	3.756	.500	V	*415006V	41
3.751	3.756	.500	S	455006	45
3.751	3.756	.500	N	455006N	45
3.751	3.756	.500	S	*475006	47
3.751	3.756	.500	N	*475006N	47
3.751	3.756	.500	S	*485006	48
3.875	3.880	.515	S	9864S&	57
3.875	3.889	.500	S	370150A	07
3.876	**3.881**	**.375**	**S**	**417158**	**41**
3.876	3.881	.375	S	*457158	45
3.876	3.881	.375	S	*477158	47
3.876	3.881	.375	V	*477158V	47
3.876	3.881	.375	S	*487158	48
3.876	3.881	.468	V	*2278	#
3.876	3.881	.468	S	*3339	44
3.876	3.881	.468	S	*415355	41
3.876	3.881	.468	N	*415355N	41
3.876	3.881	.468	S	455355	45
3.876	3.881	.468	S	*475355	47
3.876	3.881	.468	S	*485355	48
4.003	4.008	.250	S	*4012	#
4.003	4.008	.250	S	43086S	4S
4.003	**4.008**	**.375**	**S**	**416921**	**41**
4.003	4.008	.375	S	*456921	45
4.003	4.008	.375	S	*476921	47
4.003	4.008	.375	S	*486921	48
4.003	4.008	.468	V	*3441V	#
4.003	4.008	.468	S	*415011	41
4.003	4.008	.468	H	*415011H	41
4.003	4.008	.468	N	*415011N	41
4.003	4.008	.468	S	455011	45
4.003	4.008	.468	N	*455011N	45
4.003	4.008	.468	V	*455011V	45
4.003	4.008	.468	S	*475011	47
4.003	4.008	.468	S	*485011	48
4.003	4.008	.468	N	*485011N	48
4.003	4.008	.500	S	*456886	45
4.125	**4.130**	**.375**	**S**	**417134**	**41**
4.125	4.130	.375	S	*457134	45
4.125	4.130	.562	S	*415152	41
4.125	4.130	.562	S	*455152	45
4.125	4.130	.562	S	*475152	47
4.125	4.130	.562	S	*485152	48
4.125	4.130	.812	S	6780S	21
4.125	4.130	.842	S	370010A	01
4.175	4.180	.812	S	2674	89
4.175	4.181	.822	S	370054A	03
4.249	**4.254**	**.500**	**S**	**416285**	**41**
4.249	4.254	.625	S	*416286	41
4.249	4.254	.625	S	*456286	45
4.249	4.254	.625	S	*476286	47
4.249	4.254	.625	S	*486286	48
4.331	4.336	.500	H	*416426H	41
4.331	4.336	.500	N	*416426N	41
4.335	4.340	.437	F	*295113	29
4.335	4.340	.437	S	455310	45
4.335	4.340	.437	V	*455310V	45
4.376	4.381	.625	S	455556	45

For Illustration and Material Data See Technical Section
Designed For A Specific Application - Not Recommended For General Use ➡ Hydrodynamic Lip Design-CW ⬅ Hydrodynamic Lip Design-CCW
⬅➡ Hydrodynamic Lip Design-Bidirectional & Flanged O.D.
* The U.S. customer service number is 877-4-TIMKEN. The Canadian customer service numbers are 800-565-4927 (English) and 800-565-0438 (French-Canadian). ★ Metric Seal

Hsg. Bore	Seal O.D.	Seal Width	Lip Mat'l	Part No.	Type/ Illus.
2.875" (2-7/8") SHAFT (cont.)					
4.499	4.504	.468	S	*415144	41
4.499	**4.504**	**.468**	**S**	**455144**	**45**
4.499	4.504	.468	S	*475144	47
4.499	4.504	.468	S	*485144	48
4.500	4.505	.406	F	*296121	29
2.882" SHAFT					
–	–	–	S	800750	VRS1
–	–	–	S	800751	VRS2
–	–	–	V	800754	VRS1
–	–	–	V	800755	VRS2
3.431	3.436	.291	S	4122	47
3.431	3.436	.291	S	470547	47
74,00mm (2.913") SHAFT					
–	–	–	S	800750	VRS1
–	–	–	S	800751	VRS2
–	–	–	V	800754	VRS1
–	–	–	V	800755	VRS2
89,72	*90,00*	*10,00*	*S*	*74X90X10★	32
3.532	3.543	.394			
90,00	*90,15*	*10,00*	*H*	227409★⬅	32
3.543	3.549	.394			
93,72	*94,00*	*10,00*	*S*	*74X94X10★	32
3.690	3.701	.394			
94,72	*95,00*	*7,00*	*S*	*74X95X7★	32
3.729	3.740	.276			
98,00	*98,20*	*12,00*	*H*	227410★➡	32
3.858	3.866	.472			
99,72	*100,00*	*13,00*	*S*	*74X100X13★	32
3.926	3.937	.512			
2.930" SHAFT					
–	–	–	S	800750	VRS1
–	–	–	S	800751	VRS2
–	–	–	V	800754	VRS1
–	–	–	V	800755	VRS2
4.375	4.380	1.120	S	*396487	#
2.937" (2-15/16") SHAFT					
–	–	–	S	800750	VRS1
–	–	–	S	800751	VRS2
–	–	–	V	800754	VRS1
–	–	–	V	800755	VRS2
–	**–**	**.500**		**99290**	**Redi-Sleeve**
–	**–**	**.781**		**99293**	**Redi-Sleeve**
3.751	**3.756**	**.375**	**S**	**416956**	**41**
3.751	3.756	.500	S	*455383	45
3.876	3.881	.375	V	417159V	41
3.876	**3.881**	**.375**	**S**	**417159**	**41**
3.876	3.881	.468	S	*415347	41
3.876	3.881	.468	N	*415347N	41
3.876	3.881	.468	S	*455347	45
3.937	3.942	.500	N	35949N	41
3.937	**3.942**	**.500**	**S**	**416500**	**41**
3.937	3.942	.500	N	*416500N	41
3.937	3.942	.500	S	*456500	45
3.937	3.942	.500	S	*476500	47
3.937	3.942	.500	N	476500N	47
4.003	**4.008**	**.375**	**S**	**416654**	**41**
4.003	4.008	.375	N	*476654N	47
4.003	4.008	.468	S	*415012	41
4.003	4.008	.468	N	*415012N	41
4.003	4.008	.468	V	415012V	41
4.003	4.008	.468	S	455012	45
4.003	4.008	.468	N	*455012N	45
4.003	4.008	.468	V	*455012V	45
4.003	4.008	.468	S	*475012	47
2.937" (2-15/16") SHAFT (cont.)					
4.003	4.008	.468	N	475012N	47
4.003	4.008	.625	N	*35012N	43
4.003	4.008	.625	S	*417730	41
4.003	4.008	.697	V	*3623	#
4.125	**4.130**	**.375**	**S**	**417486**	**41**
4.125	4.130	.562	S	*455153	45
4.249	4.254	.625	N	*475348N	47
4.250	4.254	.468	S	416775	41
4.499	4.504	.468	S	*415356	41
4.499	4.504	.468	N	*415356N	41
4.499	4.504	.468	V	*415356V	41
4.499	**4.504**	**.468**	**S**	**455356**	**45**
4.939	4.944	1.250	N	*4035N	90
4.939	4.944	1.250	N	712937	90
2.938" SHAFT					
–	–	–	S	800750	VRS1
–	–	–	S	800751	VRS2
–	–	–	V	800754	VRS1
–	–	–	V	800755	VRS2
–	**–**	**.500**		**99290**	**Redi-Sleeve**
–	**–**	**.781**		**99293**	**Redi-Sleeve**
3.750	3.765	.530	S	*370223A	#
3.937	3.947	.552	V	4563V➡	#
4.003	4.008	.619	N	*4143N	#
2.948" SHAFT					
4.725	4.738	.526	S	370211A	07
2.950" SHAFT					
–	–	–	S	800750	VRS1
–	–	–	S	800751	VRS2
–	–	–	V	800754	VRS1
–	–	–	V	800755	VRS2
–	**–**	**.594**		***99289**	**Redi-Sleeve**
–	**–**	**.866**		**99294**	**Redi-Sleeve**
3.741	3.752	.394	S	354967	35
4.527	4.533	.375	S	*476515	47
75,00mm (2.953") SHAFT					
–	–	–	S	800750	VRS1
–	–	–	S	800751	VRS2
–	–	–	V	800754	VRS1
–	–	–	V	800755	VRS2
–	**–**	**.594**		***99289**	**Redi-Sleeve**
–	**–**	**.866**		**99294**	**Redi-Sleeve**
83,00	*87,00*	*4,00*	*S*	710240★%	#
3.268	3.425	.157			
89,72	*90,00*	*12,00*	*S*	*75X90X12★	32
3.532	3.543	.472			
90,00	*90,20*	*8,00*	*S*	75X90X8★	32
3.543	3.551	.315			
90,00	*90,25*	*10,00*	*S*	75X90X10★	32
3.543	3.553	.394			
91,72	*92,00*	*12,00*	*S*	*75X92X12★	32
3.611	3.622	.472			
93,00	*93,12*	*8,00*	*T*	39804★➡	FW-H
3.661	3.666	.315			
94,72	*95,00*	*8,00*	*S*	*75X95X8★	32
3.729	3.740	.315			
94,72	*95,00*	*12,00*	*S*	*75X95X12★	32
3.729	3.740	.472			
94,72	*95,00*	*13,00*	*S*	*75X95X13★	32
3.729	3.740	.512			

For Illustration and Material Data See Technical Section

Designed For A Specific Application - Not Recommended For General Use ➡ Hydrodynamic Lip Design-CW ⬅ Hydrodynamic Lip Design-CCW % External Bore

* The U.S. customer service number is 877-4-TIMKEN. The Canadian customer service numbers are 800-565-4927 (English) and 800-565-0438 (French-Canadian). ★ Metric Seal

Hsg. Bore	Seal O.D.	Seal Width	Lip Mat'l	Part No.	Type/ Illus.
75,00mm (2.953") SHAFT (cont.)					
95,00	*95,20*	*10,00*	*V*	*75X95X10V★	32
3.740	3.748	.394			
95,00	*95,28*	*10,00*	*S*	227530★	35
3.740	3.751	.394			
95,00	*95,28*	*10,00*	*S*	75X95X10★	32
3.740	3.751	.394			
95,00	*95,27*	*10,00*	*V*	716445★	35
3.740	3.751	.394			
99,72	*100,00*	*13,00*	*S*	*75X100X13★	32
3.926	3.937	.512			
100,00	*100,10*	*13,00*	*S*	710384★	25
3.937	3.941	.512			
100,00	*100,20*	*10,00*	*S*	75X100X10★	32
3.937	3.945	.394			
100,00	*100,20*	*10,00*	*V*	*75X100X10V★	32
3.937	3.945	.394			
100,00	*100,20*	*12,00*	*S*	227540★	32
3.937	3.945	.472			
100,00	*100,27*	*12,00*	*S*	75X100X12★	32
3.937	3.948	.472			
100,00	*100,27*	*13,00*	*H*	227550★⬅	32
3.937	3.948	.472			
101,72	*102,00*	*13,00*	*S*	*75X102X13★	32
4.005	4.016	.512			
104,72	*105,00*	*15,00*	*S*	*75X105X15★	32
4.123	4.134	.591			
105,00	*105,27*	*13,00*	*S*	75X105X13★	32
4.134	4.144	.512			
105,72	*106,00*	*10,00*	*S*	*75X106X10★	32
4.162	4.173	.394			
109,72	*110,00*	*13,00*	*S*	*75X110X13★	32
4.320	4.331	.512			
110,00	*110,20*	*10,00*	*S*	*75X110X10★	32
4.331	4.339	.394			
110,00	*110,20*	*12,00*	*S*	75X110X12★	32
4.331	4.339	.472			
112,00	*112,10*	*10,00*	*S*	710376★	#
4.409	4.413	.394			
112,00	*112,17*	*10,00*	*S*	710087★	45
4.409	4.416	.394			
114,72	*115,00*	*9,50*	*S*	*75X115X9.5★	32
4.517	4.528	.374			
114,72	*115,00*	*13,00*	*S*	*75X115X13★	32
4.517	4.528	.512			
115,00	*115,20*	*10,00*	*S*	*75X115X10★	32
4.528	4.535	.394			
115,00	*115,30*	*12,00*	*S*	75X115X12★	35
4.528	4.539	.472			
119,72	*120,00*	*12,00*	*S*	*75X120X12★	32
4.713	4.724	.472			
120,00	*120,12*	*8,13*	*S*	200322★	200
4.724	4.729	.320			
120,00	*120,20*	*10,00*	*S*	75X120X10★	32
4.724	4.732	.394			
133,70	*134,00*	*10,00*	*S*	*75X134X10★	32
5.264	5.276	.394			
2.988" SHAFT					
–	–	–	S	800750	VRS1
–	–	–	S	800751	VRS2
–	–	–	V	800754	VRS1
–	–	–	V	800755	VRS2
3.740	3.748	.374	H	3698⬅	32
2.991" SHAFT					
–	–	–	S	800750	VRS1
–	–	–	S	800751	VRS2
–	–	–	V	800754	VRS1
–	–	–	V	800755	VRS2
–	**–**	**.484**		**99291**	**Redi-Sleeve**
2.991" SHAFT (cont.)					
–	**–**	**.563**		**99298**	**Redi-Sleeve**
–	**–**	**.813**		**99299**	**Redi-Sleeve**
3.622	3.637	.380	V	*327995V	32
3.622	3.637	.385	T	*100202T⬅	FW-H
76,00mm (2.992") SHAFT					
–	–	–	S	800750	VRS1
–	–	–	S	800751	VRS2
–	–	–	V	800754	VRS1
–	–	–	V	800755	VRS2
–	**–**	**.484**		**99291**	**Redi-Sleeve**
–	**–**	**.563**		**99298**	**Redi-Sleeve**
–	**–**	**.813**		**99299**	**Redi-Sleeve**
91,72	*92,00*	*10,00*	*S*	*76X92X10★	32
3.611	3.622	.394			
92,00	*92,28*	*9,50*	*V*	4307V★⬅	32
3.622	3.633	.374			
92,00	*92,28*	*9,60*	*V*	327995★⬅	32
3.622	3.633	.378			
93,00	*93,30*	*10,00*	*H*	1019★⬅	32
3.661	3.673	.394			
93,72	*94,00*	*12,00*	*S*	*76X94X12★	32
3.690	3.701	.472			
98,00	*98,20*	*12,00*	*H*	227610★➡	32
3.858	3.866	.472			
102,00	*102,20*	*9,50*	*S*	710375★	#
4.016	4.024	.374			
104,72	*105,00*	*12,00*	*S*	*76X105X12★	32
4.123	4.134	.472			
104,72	*105,00*	*13,00*	*S*	*76X105X13★	32
4.123	4.134	.512			
3.000" SHAFT					
–	–	–	S	800750	VRS1
–	–	–	S	800751	VRS2
–	–	–	V	800754	VRS1
–	–	–	V	800755	VRS2
–	**–**	**.625**		**99303**	**Redi-Sleeve**
–	**–**	**.813**		**99296**	**Redi-Sleeve**
–	**–**	**.813**		**99300**	**Redi-Sleeve**
3.500	–	.313	U	710028	#
3.686	3.702	.523	N	7338N&	56
3.751	3.756	.375	N	476023N	47
3.751	3.756	.375	V	*476023V	47
3.751	3.756	.375	S	*486023	48
3.751	3.756	.375	N	*486023N	48
3.751	3.756	.437	V	417349V	41
3.751	**3.756**	**.437**	**S**	**417349**	**41**
3.751	3.756	.437	S	*457349	45
3.751	3.756	.437	S	*477349	47
3.751	3.756	.437	S	*487349	48
3.751	3.756	.500	S	*415281	41
3.751	3.756	.500	N	415281N	41
3.751	3.756	.500	V	*415281V	41
3.751	3.756	.500	S	*455281	45
3.751	3.756	.500	H	*455281H	45
3.751	3.756	.500	N	*455281N	45
3.751	3.756	.500	S	*475281	47
3.751	3.756	.500	N	*475281N	47
3.751	3.756	.500	S	*485281	48
3.752	3.760	.375	S	*6442S	35
3.876	**3.881**	**.437**	**S**	**417350**	**41**
3.876	3.881	.437	S	*457350	45
3.876	3.881	.437	S	*477350	47
3.876	3.881	.437	S	*487350	48
3.876	3.881	.468	S	*415479	41

For Illustration and Material Data See Technical Section

Designed For A Specific Application - Not Recommended For General Use ➡ Hydrodynamic Lip Design-CW ⬅ Hydrodynamic Lip Design-CCW & Flanged O.D.

* The U.S. customer service number is 877-4-TIMKEN. The Canadian customer service numbers are 800-565-4927 (English) and 800-565-0438 (French-Canadian). ★ Metric Seal

3.000" SHAFT (cont.)

Hsg. Bore	Seal O.D.	Seal Width	Lip Mat'l	Part No.	Type/ Illus.
3.876	3.881	.468	N	*415479N	41
3.876	3.881	.468	S	455479	45
3.876	3.881	.468	V	455479V	45
3.876	3.881	.468	S	*475479	47
3.876	3.881	.468	H	*475479H	47
3.876	3.881	.468	N	*475479N	47
3.876	3.881	.468	S	*485479	48
3.876	3.881	.500	N	*415526N	41
3.876	3.881	.500	N	*455526N	45
3.876	3.885	.500	S	355526	35
3.936	3.941	.500	S	455509	45
3.999	**4.004**	**.437**	**S**	**453182**	**45**
4.000	4.008	.500	U	710011	#
4.000	4.012	.600	U	710009	#
4.002	4.625	.884	S	*8427	#
4.003	4.008	.250	S	45013S	4S
4.003	4.008	.312	V	710457	86
4.003	4.008	.375	S	*7021S	48
4.003	**4.008**	**.375**	**S**	**415995**	**41**
4.003	4.008	.375	A	415995A	41
4.003	4.008	.375	N	*415995N	41
4.003	**4.008**	**.375**	**V**	**415995V**	**41**
4.003	4.008	.375	N	455995N	45
4.003	4.008	.375	S	*475995	47
4.003	4.008	.375	V	*475995V	47
4.003	4.008	.437	V	415836V	41
4.003	4.008	.437	S	415836	41
4.003	4.008	.437	N	415836N	41
4.003	4.008	.437	S	*455836	45
4.003	4.008	.437	S	*475836	47
4.003	4.008	.437	V	*475836V	47
4.003	4.008	.437	S	*485836	48
4.003	4.008	.468	S	*3204	#
4.003	4.008	.468	S	415013	41
4.003	4.008	.468	N	415013N	41
4.003	4.008	.468	V	*415013V	41
4.003	4.008	.468	S	455013	45
4.003	4.008	.468	H	*455013H	45
4.003	4.008	.468	N	*455013N	45
4.003	4.008	.468	V	*455013V	45
4.003	4.008	.468	S	*475013	47
4.003	4.008	.468	N	*475013N	47
4.003	4.008	.468	S	*485013	48
4.003	4.008	.640	N	*7774N	#
4.125	4.130	.312	S	*7844	#
4.125	**4.130**	**.437**	**S**	**417351**	**41**
4.125	4.130	.437	S	*457351	45
4.125	4.130	.437	S	*477351	47
4.125	4.130	.437	S	*487351	48
4.125	4.130	.438	S	*487119	48
4.125	4.130	.562	S	*415154	41
4.125	4.130	.562	S	455154	45
4.125	4.130	.562	S	*475154	47
4.125	4.130	.562	S	*485154	48
4.249	**4.254**	**.437**	**S**	**417487**	**41**
4.249	4.254	.468	S	*415086	41
4.249	4.254	.468	N	415086N	41
4.249	4.254	.468	V	*415086V	41
4.249	4.254	.468	S	455086	45
4.249	4.254	.468	H	*455086H	45
4.249	4.254	.468	N	*455086N	45
4.249	4.254	.468	N	*475086N	47
4.249	4.254	.500	S	*416026	41
4.249	4.254	.500	S	*456026	45
4.249	4.254	.500	V	*456026V	45
4.249	4.254	.625	L	*55014	5L
4.249	4.254	.625	S	*55014S	5S
4.249	4.254	.625	S	*415014	41
4.249	4.254	.625	N	*415014N	41
4.249	4.254	.625	S	455014	45
4.249	4.254	.625	S	*475014	47
4.249	4.254	.625	S	*485014	48

3.000" SHAFT (cont.)

Hsg. Bore	Seal O.D.	Seal Width	Lip Mat'l	Part No.	Type/ Illus.
4.331	**4.336**	**.500**	**S**	**415962**	**41**
4.376	**4.381**	**.500**	**S**	**417488**	**41**
4.376	4.381	.625	S	*415158	41
4.376	4.381	.625	N	*415158N	41
4.376	4.381	.625	S	*455158	45
4.376	4.381	.760	V	*2515V	#
4.490	4.508	.562	S	*325088	32
4.499	**4.504**	**.468**	**S**	**415088**	**41**
4.499	4.504	.468	N	*415088N	41
4.499	4.504	.468	S	455088	45
4.499	4.504	.468	N	*455088N	45
4.499	4.504	.468	V	455088V	45
4.499	4.504	.468	S	*475088	47
4.499	4.504	.468	N	*475088N	47
4.499	4.504	.468	S	*485088	48
4.500	4.506	.500	S	*487162	48
4.501	4.506	.468	S	*457163	45
4.501	4.506	.468	N	477163N	47
4.524	4.600	.433	S	200133%	200E
4.626	4.631	.500	L	55548	5L
4.750	4.756	.500	S	*457165	45
4.751	**4.756**	**.625**	**S**	**416370**	**41**
4.751	4.756	.625	S	*456370	45
4.751	4.756	.625	S	*476370	47
4.751	4.756	.625	S	*486370	48
4.875	4.881	.625	S	455820	45
4.938	4.943	.740	N	3905&	76
4.999	5.004	.468	S	*415019	41
4.999	**5.004**	**.468**	**S**	**455019**	**45**
4.999	5.004	.468	S	*475019	47
4.999	5.004	.468	S	*485019	48
5.000	5.006	.859	S	*76894S	7S
5.500	5.506	.531	N	3143N&	74
5.501	5.506	1.266	N	3592	90
5.501	5.507	.312	S	*7843	#
5.750	5.764	.413	N	712000	#
5.751	5.756	.840	N	710008&	74

3.003" SHAFT

–	–	–	S	800750	VRS1
–	–	–	S	800751	VRS2
–	–	–	V	800754	VRS1
–	–	–	V	800755	VRS2
–	**–**	**.625**		**99303**	**Redi-Sleeve**
–	**–**	**.813**		**99296**	**Redi-Sleeve**
–	**–**	**.813**		**99300**	**Redi-Sleeve**
3.751	3.761	.420	V	100495	08
3.751	3.761	.570	V	4810V➡	#
3.751	3.761	.570	V	714810⬅	#
3.951	3.961	.289	N	*100373	#
4.028	4.038	.302	N	*100406	#
4.937	4.948	.662	V	4562V➡	#
4.937	4.948	.788	V	100263➡	08

77,00mm (3.031") SHAFT

–	–	–	S	800750	VRS1
–	–	–	S	800751	VRS2
–	–	–	V	800754	VRS1
–	–	–	V	800755	VRS2
99,72	*100,00*	*10,00*	*S*	*77X100X10★	32
3.926	3.937	.394			
100,10	*100,30*	*11,00*	*N*	*712138★	35
3.941	3.949	.433			

3.040" SHAFT

–	–	–	S	800750	VRS1
–	–	–	S	800751	VRS2
–	–	–	V	800754	VRS1

For Illustration and Material Data See Technical Section
Designed For A Specific Application - Not Recommended For General Use ➡ Hydrodynamic Lip Design-CW ⬅ Hydrodynamic Lip Design-CCW % External Bore
& Flanged O.D. * The U.S. customer service number is 877-4-TIMKEN. The Canadian customer service numbers are 800-565-4927 (English) and 800-565-0438 (French-Canadian).
★ Metric Seal

Hsg. Bore	Seal O.D.	Seal Width	Lip Mat'l	Part No.	Type/ Illus.
3.040" SHAFT (cont.)					
–	–	–	V	800755	VRS2
3.937	3.946	.250	S	355669	35
6.412	6.418	.658	S	710090	#
3.062" (3-1/16") SHAFT					
–	–	–	S	800750	VRS1
–	–	–	S	800751	VRS2
–	–	–	V	800754	VRS1
–	–	–	V	800755	VRS2
4.003	4.008	.468	S	*486893	48
4.125	4.130	.562	S	*455155	45
4.230	4.350	.390	S	*200766%	200E
4.249	4.254	.625	S	455015	45
4.331	4.336	.500	S	*456733	45
4.999	5.004	.468	S	455020	45
78,00mm (3.071") SHAFT					
–	–	–	S	800800	VRS1
–	–	–	V	800804	VRS1
–	–	–	V	800805	VRS2
95,00	*95,20*	*10,00*	*S*	*78X95X10★	32
3.740	3.748	.394			
99,72	*100,00*	*13,00*	*S*	*78X100X13★	32
3.926	3.937	.512			
100,00	*100,27*	*10,00*	*S*	78X100X10★	32
3.937	3.948	.394			
105,00	*105,20*	*10,00*	*S*	78X105X10★	32
4.134	4.142	.394			
109,72	*110,00*	*12,00*	*S*	*78X110X12★	32
4.320	4.331	.472			
109,72	*110,00*	*13,00*	*S*	*78X110X13★	32
4.320	4.331	.512			
110,00	*110,20*	*10,00*	*S*	*78X110X10★	32
4.331	4.339	.394			
115,00	*115,20*	*10,00*	*S*	78X115X10★	32
4.528	4.535	.394			
3.110" SHAFT					
–	–	–	S	800800	VRS1
–	–	–	V	800804	VRS1
–	–	–	V	800805	VRS2
–	5.750	.375	S	7896S	51
3.750	3.760	.437	T	*712142⬅	32
3.898	3.913	.378	T	712126⬅	FW-H
3.125" (3-1/8") SHAFT					
–	–	–	S	800800	VRS1
–	–	–	V	800804	VRS1
–	–	–	V	800805	VRS2
–	**–**	**.551**		***99307**	**Redi-Sleeve**
–	–	.571	S	*8369S	#
–	**–**	**.688**		**99311**	**Redi-Sleeve**
–	**–**	**.813**		**99312**	**Redi-Sleeve**
–	7.500	.531	S	*6480	#
–	8.250	.500	S	*6764S	#
–	8.250	.571	S	6649	52
–	8.250	.925	S	*6897	#
3.750	3.768	.437	T	712100⬅	PDW
3.751	3.756	.250	S	45825S	4S
3.876	3.881	.468	S	*475568	47
3.936	3.943	.512	V	2260	45
3.937	3.942	.500	S	*456909	45
4.003	**4.008**	**.375**	**S**	**416404**	**41**
4.003	4.008	.375	V	*416404V	41
4.003	4.008	.375	S	*476404	47
4.003	4.008	.375	N	*476404N	47
4.003	4.008	.468	S	*415354	41
3.125" (3-1/8") SHAFT (cont.)					
4.003	4.008	.468	N	*415354N	41
4.003	4.008	.468	S	*455354	45
4.003	4.008	.468	N	*455354N	45
4.003	4.008	.468	S	*475354	47
4.003	4.008	.468	H	*475354H	47
4.003	4.008	.468	S	*485354	48
4.003	4.008	.500	V	*4470V	#
4.003	4.008	.500	V	457034	45
4.003	4.008	.500	V	*487034V	48
4.003	4.008	.500	V	714470	48
4.003	4.008	.790	S	*77938	7S
4.049	4.054	.437	S	*6754S	45
4.125	**4.130**	**.375**	**S**	**417621**	**41**
4.125	4.130	.437	T	39809➡	W-H
4.125	4.130	.500	H	*4156H	#
4.125	4.130	.500	H	2291	41
4.125	4.130	.500	S	416011	41
4.125	4.130	.500	V	*416011V	41
4.125	4.130	.500	S	*456011	45
4.125	4.130	.500	V	*456011V	45
4.125	4.130	.500	S	*476011	47
4.125	4.130	.500	H	*476011H	47
4.125	4.130	.500	V	*476011V	47
4.125	4.130	.500	S	*486011	48
4.125	4.130	.562	S	*415156	41
4.125	4.130	.562	H	*415156H	41
4.125	4.130	.562	N	415156N	41
4.125	4.130	.562	S	*455156	45
4.125	4.130	.562	N	*455156N	45
4.125	4.130	.562	V	*455156V	45
4.125	4.130	.562	S	*475156	47
4.125	4.130	.562	H	*475156H	47
4.125	4.130	.562	N	*475156N	47
4.125	4.130	.562	S	*485156	48
4.125	4.130	1.750	S	*6050	33
4.126	4.130	.437	T	39817➡	FW-H
4.173	4.179	.290	S	8976S	49
4.174	4.188	.500	S	370145A	07
4.249	4.254	.468	S	*416287	41
4.249	4.254	.468	H	*416287H	41
4.249	4.254	.468	N	*416287N	41
4.249	4.254	.468	V	*416287V	41
4.249	4.254	.468	S	*456287	45
4.249	4.254	.468	S	*486287	48
4.249	**4.254**	**.500**	**S**	**416288**	**41**
4.249	4.254	.500	S	*456288	45
4.249	4.254	.500	S	*476288	47
4.249	4.254	.500	S	*486288	48
4.249	4.254	.625	S	*415016	41
4.249	4.254	.625	N	415016N	41
4.249	4.254	.625	S	*455016	45
4.249	4.254	.625	S	*475016	47
4.249	4.254	.625	S	*485016	48
4.375	**4.381**	**.500**	**S**	**417171**	**41**
4.375	4.381	.500	S	*457171	45
4.375	4.381	.500	S	*477171	47
4.375	4.381	.500	S	*487171	48
4.375	4.381	.562	N	*456289N	45
4.376	4.381	.562	S	*416289	41
4.376	4.381	.562	N	*416289N	41
4.376	4.381	.562	S	*456289	45
4.376	4.381	.625	S	*415160	41
4.376	4.381	.625	S	*455160	45
4.376	4.381	.625	S	*485160	48
4.450	4.456	.880	S	710080	#
4.499	4.504	.468	S	*415145	41
4.499	4.504	.468	N	*415145N	41
4.499	4.504	.468	V	*415145V	41
4.499	4.504	.468	S	*455145	45
4.499	4.504	.468	S	*475145	47
4.499	4.504	.468	S	*485145	48
4.500	**4.506**	**.500**	**S**	**417172**	**41**

For Illustration and Material Data See Technical Section

Designed For A Specific Application - Not Recommended For General Use ➡ Hydrodynamic Lip Design-CW ⬅ Hydrodynamic Lip Design-CCW % External Bore

* The U.S. customer service number is 877-4-TIMKEN. The Canadian customer service numbers are 800-565-4927 (English) and 800-565-0438 (French-Canadian). ★ Metric Seal

Hsg. Bore	Seal O.D.	Seal Width	Lip Mat'l	Part No.	Type/ Illus.
3.125" (3-1/8") SHAFT (cont.)					
4.500	4.506	.500	S	*457172	45
4.500	4.506	.500	S	*477172	47
4.500	4.506	.500	S	*487172	48
4.500	4.506	.605	S	370014A	06
4.562	4.567	.687	F	*6603	205
4.562	4.567	.760	L	6644	5L
4.562	4.567	1.198	L	5751	34
4.625	4.631	.500	S	*457173	45
4.625	4.631	.562	S	*55690	5S
4.625	4.631	.605	S	370046A	06
4.626	**4.631**	**.437**	**S**	**416297**	**41**
4.626	4.631	.437	S	*476297	47
4.751	**4.756**	**.500**	**S**	**416024**	**41**
4.751	4.756	.625	S	*415245	41
4.751	4.756	.625	N	*415245N	41
4.751	4.756	.625	S	*455245	45
4.751	4.756	.625	S	*475245	47
4.751	4.756	.625	H	*475245H	47
4.751	4.756	.625	S	*485245	48
4.999	**5.004**	**.468**	**S**	**415021**	**41**
4.999	5.004	.468	S	*455021	45
4.999	5.004	.468	S	*475021	47
4.999	5.004	.468	S	*485021	48
4.999	5.004	.500	S	*456301	45
5.251	**5.256**	**.468**	**S**	**415394**	**41**
5.251	5.256	.468	S	*455394	45
5.251	5.256	.468	S	*475394	47
5.251	5.256	.468	S	*485394	48
5.778	8.125	.571	S	*6505S	#
5.985	6.000	.955	S	9600S	#
7.000	8.250	1.003	N	*6481	51
7.000	8.250	1.003	S	6481S	51
3.133" SHAFT					
–	–	–	S	800800	VRS1
–	–	–	V	800804	VRS1
–	–	–	V	800805	VRS2
3.547	3.551	.366	S	710106	#
3.142" SHAFT					
–	–	–	S	800800	VRS1
–	–	–	V	800804	VRS1
–	–	–	V	800805	VRS2
–	**–**	**.750**		**99313**	**Redi-Sleeve**
3.733	3.736	.565	S	710103	#
3.146" SHAFT					
–	–	–	S	800800	VRS1
–	–	–	V	800804	VRS1
–	–	–	V	800805	VRS2
–	**–**	**.433**		***99317**	**Redi-Sleeve**
–	**–**	**.750**		**99313**	**Redi-Sleeve**
–	**–**	**.827**		**99315**	**Redi-Sleeve**
4.003	4.008	.468	S	*450407	45
80,00mm (3.150") SHAFT					
–	–	–	S	800800	VRS1
–	–	–	V	800804	VRS1
–	–	–	V	800805	VRS2
–	**–**	**.433**		***99317**	**Redi-Sleeve**
–	**–**	**.750**		**99313**	**Redi-Sleeve**
–	**–**	**.827**		**99315**	**Redi-Sleeve**
94,72	*95,00*	*8,00*	*S*	*80X95X8★	32
3.729	3.740	.315			

Hsg. Bore	Seal O.D.	Seal Width	Lip Mat'l	Part No.	Type/ Illus.
80,00mm (3.150") SHAFT (cont.)					
96,00	*96,28*	*9,00*	*V*	228005★⬅	32
3.780	3.791	.354			
97,72	*98,00*	*10,00*	*S*	*80X98X10★	32
3.847	3.858	.394			
98,00	*98,40*	*10,00*	*V*	228008★⬅	32
3.858	3.874	.394			
99,72	*100,00*	*8,00*	*S*	*80X100X8★	32
3.926	3.937	.315			
99,72	*100,00*	*12,00*	*S*	*80X100X12★	32
3.926	3.937	.472			
99,72	*100,00*	*13,00*	*S*	*80X100X13★	32
3.926	3.937	.512			
100,00	*100,20*	*10,00*	*S*	80X100X10★	35
3.937	3.945	.394			
100,00	*100,20*	*10,00*	*V*	*80X100X10V★	32
3.937	3.945	.394			
100,00	*100,20*	*10,00*	*H*	228015★➡	32
3.937	3.945	.394			
100,00	*100,20*	*10,00*	*V*	228011★⬅	32
3.937	3.945	.394			
100,00	*100,23*	*10,00*	*H*	228009★⬅	32
3.937	3.946	.394			
100,00	*100,35*	*13,00*	*H*	228010★⬅	32
3.937	3.951	.512			
100,00	*100,40*	*10,00*	*T*	712111★➡	FW-H
3.937	3.953	.394			
100,00	*100,40*	*13,00*	*T*	712115★➡	FW-H
3.937	3.953	.512			
100,00	*100,40*	*13,00*	*T*	712120★➡	FW-H
3.937	3.953	.512			
100,00	*100,40*	*13,00*	*T*	712123★➡	FW-H
3.937	3.953	.512			
104,72	*105,00*	*12,00*	*S*	*80X105X12★	32
4.123	4.134	.472			
105,00	*105,20*	*10,00*	*S*	80X105X10★	32
4.134	4.142	.394			
105,00	*105,20*	*12,00*	*V*	*80X105X12V★	35
4.134	4.142	.472			
105,00	*105,27*	*13,00*	*S*	80X105X13★	32
4.134	4.144	.512			
105,00	*105,26*	*14,00*	*S*	228025★	32
4.134	4.144	.551			
105,00	*105,27*	*14,00*	*S*	*80X105X14★	32
4.134	4.144	.551			
105,00	*105,27*	*14,00*	*S*	228020★	32
4.134	4.144	.551			
109,72	*110,00*	*13,00*	*S*	*80X110X13★	32
4.320	4.331	.512			
110,00	*110,20*	*10,00*	*V*	*80X110X10V★	32
4.331	4.339	.394			
110,00	*110,28*	*10,00*	*S*	80X110X10★	32
4.331	4.342	.394			
110,00	*110,28*	*12,00*	*S*	228030★	35
4.331	4.342	.472			
110,00	*110,28*	*12,00*	*S*	80X110X12★	35
4.331	4.342	.472			
114,72	*115,00*	*10,00*	*S*	*80X115X10★	32
4.517	4.528	.394			
114,72	*115,00*	*13,00*	*S*	*80X115X13★	32
4.517	4.528	.512			
115,00	*115,20*	*12,00*	*S*	*80X115X12★	32
4.528	4.535	.472			
120,00	*120,20*	*10,00*	*S*	80X120X10★	32
4.724	4.732	.394			
120,00	*120,28*	*13,00*	*S*	80X120X13★	32
4.724	4.735	.512			
124,72	*125,00*	*10,00*	*S*	*80X125X10★	32
4.910	4.921	.394			
124,72	*125,00*	*13,00*	*S*	*80X125X13★	32
4.910	4.921	.512			
124,72	*125,00*	*14,00*	*S*	*80X125X14★	32
4.910	4.921	.551			

For Illustration and Material Data See Technical Section

Designed For A Specific Application - Not Recommended For General Use ➡ Hydrodynamic Lip Design-CW ⬅ Hydrodynamic Lip Design-CCW

* The U.S. customer service number is 877-4-TIMKEN. The Canadian customer service numbers are 800-565-4927 (English) and 800-565-0438 (French-Canadian). ★ Metric Seal

Hsg. Bore	Seal O.D.	Seal Width	Lip Mat'l	Part No.	Type/ Illus.
80,00mm (3.150") SHAFT (cont.)					
125,00	*125,20*	*12,00*	*S*	*80X125X12★	32
4.921	4.929	.472			
125,00	*125,27*	*7,00*	*S*	80X125X7★	32
4.921	4.932	.276			
129,70	*130,00*	*13,00*	*S*	*80X130X13★	32
5.106	5.118	.512			
130,00	*130,20*	*12,00*	*S*	*80X130X12★	32
5.118	5.126	.472			
135,00	*135,20*	*12,00*	*S*	*80X135X12★	32
5.315	5.323	.472			
140,00	*140,20*	*12,00*	*S*	*80X140X12★	32
5.512	5.520	.472			
3.164" SHAFT					
–	–	–	S	800800	VRS1
–	–	–	V	800804	VRS1
–	–	–	V	800805	VRS2
4.249	4.254	.625	S	*455734	45
4.999	5.004	.468	S	456799	45
4.999	5.004	.468	H	*456799H	45
3.180" SHAFT					
–	–	–	S	800800	VRS1
–	–	–	V	800804	VRS1
–	–	–	V	800805	VRS2
4.180	4.185	.750	S	3385⬅➡	74
3.187" (3-3/16") SHAFT					
4.249	**4.254**	**.468**	**S**	**456105**	**45**
4.249	4.254	.625	S	*455017	45
4.376	4.381	.500	S	417490	41
4.376	4.381	.625	S	*455161	45
4.499	**4.504**	**.468**	**S**	**455336**	**45**
4.625	4.630	.442	S	*2054	47
4.625	4.630	.442	S	6358⬅➡	47
4.999	5.004	.468	S	455022	45
5.000	5.006	.765	S	370029A	03
3.209" SHAFT					
–	–	–	S	800800	VRS1
–	–	–	V	800804	VRS1
–	–	–	V	800805	VRS2
89,80	–	*2,50*	*S*	710293★	#
3.535	–	.098			
3.226" SHAFT					
–	–	–	S	800800	VRS1
–	–	–	V	800804	VRS1
–	–	–	V	800805	VRS2
–	**–**	**.661**		**99328**	**Redi-Sleeve**
–	8.250	.518	S	*6477S	#
82,00mm (3.228") SHAFT					
–	–	–	S	800800	VRS1
–	–	–	V	800804	VRS1
–	–	–	V	800805	VRS2
–	**–**	**.661**		**99328**	**Redi-Sleeve**
99,50	*99,77*	*12,70*	*V*	320691★⬅	32
3.918	3.928	.500			
105,00	*105,25*	*13,00*	*S*	82X105X13★	25
4.134	4.144	.512			
105,00	*105,30*	*13,00*	*H*	1945★⬅	32
4.134	4.146	.512			
105,00	*105,30*	*13,00*	*H*	228480★⬅	#
4.134	4.146	.512			

Hsg. Bore	Seal O.D.	Seal Width	Lip Mat'l	Part No.	Type/ Illus.
3.230" SHAFT					
–	–	–	S	800800	VRS1
–	–	–	V	800804	VRS1
–	–	–	V	800805	VRS2
–	**–**	**.661**		**99328**	**Redi-Sleeve**
3.790	3.795	.325	T	40375⬅	32
3.249" SHAFT					
4.468	4.488	.318	S	200870%	200E
4.536	4.556	.315	S	*200880%	200E
3.250" (3-1/4") SHAFT					
–	–	–	S	800800	VRS1
–	–	–	V	800804	VRS1
–	–	–	V	800805	VRS2
–	**–**	**.595**		**99324**	**Redi-Sleeve**
–	**–**	**.600**		**99323**	**Redi-Sleeve**
–	–	.656	V	*4596V	#
–	**–**	**.688**		***99326**	**Redi-Sleeve**
–	**–**	**.813**		**99322**	**Redi-Sleeve**
–	**–**	**.813**		**99325**	**Redi-Sleeve**
–	4.325	.404	N	*100355	#
3.781	3.785	.593	S	*712131	#
3.879	3.881	.375	V	710180⬅	47
4.003	**4.008**	**.375**	**S**	**417433**	**41**
4.003	4.008	.468	T	55563➡	5S
4.003	4.008	.468	S	415563	41
4.003	4.008	.468	N	*415563N	41
4.003	4.008	.468	S	*475563	47
4.125	4.130	.500	H	*255566H	25
4.125	4.130	.562	V	*455566V	45
4.125	4.130	.562	S	*415566	41
4.125	4.130	.562	N	*415566N	41
4.125	4.130	.562	V	*415566V	41
4.125	**4.130**	**.562**	**S**	**455566**	**45**
4.125	4.130	.562	N	*455566N	45
4.125	4.130	.562	S	*475566	47
4.125	4.130	.562	S	*485566	48
4.125	4.130	.937	S	*6495S	9S
4.247	4.254	.375	V	476470V	47
4.249	4.254	.375	F	296470	29
4.249	4.254	.375	N	416470N	41
4.249	**4.254**	**.375**	**S**	**476470**	**47**
4.249	4.254	.375	N	*476470N	47
4.249	4.254	.468	V	411275	41
4.249	4.254	.468	H	*411275H	41
4.249	4.254	.468	N	*411275N	41
4.249	4.254	.468	S	*451275	45
4.249	4.254	.468	N	*451275N	45
4.249	4.254	.500	S	415304	41
4.249	4.254	.500	N	*415304N	41
4.249	4.254	.500	V	*415304V	41
4.249	4.254	.500	S	*455304	45
4.249	4.254	.500	N	*455304N	45
4.249	4.254	.500	V	*455304V	45
4.249	4.254	.500	S	*475304	47
4.249	4.254	.500	V	*475304V	47
4.249	4.254	.500	S	*485304	48
4.249	4.254	.625	S	*415018	41
4.249	4.254	.625	N	*415018N	41
4.249	4.254	.625	S	455018	45
4.249	4.254	.625	H	*455018H	45
4.249	4.254	.625	N	455018N	45
4.249	4.254	.625	S	*475018	47
4.249	4.254	.625	S	*485018	48
4.249	4.260	.662	V	4543V➡	#
4.249	4.282	.650	N	4875N➡	#
4.250	4.254	.500	S	*9640	#

For Illustration and Material Data See Technical Section

Designed For A Specific Application - Not Recommended For General Use ➡ Hydrodynamic Lip Design-CW ⬅ Hydrodynamic Lip Design-CCW

⬅➡ Hydrodynamic Lip Design-Bidirectional % External Bore

* The U.S. customer service number is 877-4-TIMKEN. The Canadian customer service numbers are 800-565-4927 (English) and 800-565-0438 (French-Canadian). ★ Metric Seal

3.250" (3-1/4") SHAFT (cont.)

Hsg. Bore	Seal O.D.	Seal Width	Lip Mat'l	Part No.	Type/ Illus.
4.250	4.255	.500	U	710016	#
4.330	4.340	.250	S	∗345703	34
4.376	**4.381**	**.500**	**S**	**417181**	**41**
4.376	4.381	.500	S	∗457181	45
4.376	4.381	.500	S	∗477181	47
4.376	4.381	.500	S	∗487181	48
4.376	4.381	.562	S	∗416290	41
4.376	4.381	.562	S	∗456290	45
4.376	4.381	.562	V	∗456290V	45
4.376	4.381	.625	S	∗415162	41
4.376	4.381	.625	S	∗455162	45
4.376	4.381	.625	N	∗455162N	45
4.376	4.381	.625	S	∗485162	48
4.499	4.504	.468	S	415137	41
4.499	4.504	.468	S	455137	45
4.499	4.504	.468	V	∗455137V	45
4.499	4.504	.468	S	∗475137	47
4.499	4.504	.468	N	∗475137N	47
4.499	4.504	.468	S	∗485137	48
4.500	4.505	.406	F	∗296051	29
4.500	**4.506**	**.375**	**S**	**418028**	**41**
4.500	4.506	.500	S	417352	41
4.500	4.506	.500	S	∗457352	45
4.500	4.506	.500	S	∗477352	47
4.500	4.506	.500	S	∗487352	48
4.500	4.506	.605	S	370018A	06
4.500	4.507	.718	S	6584S&	74
4.500	4.600	.315	S	7208S%	200E
4.501	4.506	.468	S	∗455615	45
4.626	4.631	.437	S	∗476303	47
4.626	4.631	.437	S	∗486303	48
4.626	4.631	.625	S	∗416304	41
4.626	**4.632**	**.500**	**S**	**417353**	**41**
4.626	4.632	.500	S	∗457353	45
4.626	4.632	.500	S	∗477353	47
4.626	4.632	.500	S	∗487353	48
4.626	4.633	.706	S	∗9583⬅➡	#
4.718	4.723	.468	L	55236	5L
4.723	**4.729**	**.468**	**S**	**415577**	**41**
4.723	4.729	.468	N	∗415577N	41
4.723	4.729	.468	S	∗455577	45
4.751	**4.756**	**.484**	**S**	**456305**	**45**
4.751	4.756	.500	S	∗456306	45
4.751	4.756	.625	S	∗415265	41
4.751	4.756	.625	N	∗415265N	41
4.751	4.756	.625	S	∗455265	45
4.751	4.756	.625	S	∗475265	47
4.751	4.756	.625	S	∗485265	48
4.999	**5.004**	**.468**	**S**	**415023**	**41**
4.999	5.004	.468	S	∗455023	45
4.999	5.004	.468	S	∗475023	47
4.999	5.004	.468	S	∗485023	48
4.999	5.004	.500	S	∗416309	41
5.251	5.256	.468	S	∗415328	41
5.251	5.256	.468	S	455328	45
5.251	5.256	.468	S	∗475328	47
5.251	5.256	.468	S	∗485328	48
5.500	5.506	.500	N	417987N	41
6.125	6.149	.500	S	∗2699	#
6.374	6.380	.468	S	∗487056	48

3.253" SHAFT

Hsg. Bore	Seal O.D.	Seal Width	Lip Mat'l	Part No.	Type/ Illus.
–	–	–	S	800800	VRS1
–	–	–	V	800804	VRS1
–	–	–	V	800805	VRS2
–	**–**	**.595**		**99324**	**Redi-Sleeve**
–	**–**	**.600**		**99323**	**Redi-Sleeve**
–	**–**	**.688**		**∗99326**	**Redi-Sleeve**
–	**–**	**.813**		**99322**	**Redi-Sleeve**

3.253" SHAFT (cont.)

Hsg. Bore	Seal O.D.	Seal Width	Lip Mat'l	Part No.	Type/ Illus.
–	**–**	**.813**		**99325**	**Redi-Sleeve**
4.249	4.260	.635	V	100494➡	08
4.499	4.505	.468	S	∗2109	41
5.500	5.511	.630	V	4544V➡	#
5.500	5.511	.635	V	100557➡	08

3.263" SHAFT

Hsg. Bore	Seal O.D.	Seal Width	Lip Mat'l	Part No.	Type/ Illus.
–	–	–	S	800800	VRS1
–	–	–	V	800804	VRS1
–	–	–	V	800805	VRS2
3.275	4.110	.500	S	∗8710	#

83,00mm (3.268") SHAFT

Hsg. Bore	Seal O.D.	Seal Width	Lip Mat'l	Part No.	Type/ Illus.
–	–	–	S	800800	VRS1
–	–	–	V	800804	VRS1
–	–	–	V	800805	VRS2
100,00	*100,20*	*9,00*	*H*	228250★⬅	32
3.937	3.945	.354			
103,72	*104,00*	*9,00*	*S*	∗83X104X9★	32
4.083	4.094	.354			
109,72	*110,00*	*13,00*	*S*	∗83X110X13★	32
4.320	4.331	.512			
116,72	*117,00*	*14,00*	*S*	∗83X117X14★	32
4.595	4.606	.551			

3.270" SHAFT

Hsg. Bore	Seal O.D.	Seal Width	Lip Mat'l	Part No.	Type/ Illus.
–	–	–	S	800800	VRS1
–	–	–	V	800804	VRS1
–	–	–	V	800805	VRS2
3.655	3.660	.500	S	∗2499	#

3.298" SHAFT

Hsg. Bore	Seal O.D.	Seal Width	Lip Mat'l	Part No.	Type/ Illus.
4.125	**4.130**	**.562**	**S**	**455500**	**45**
4.125	4.130	.562	S	475500	47
4.125	4.130	.562	N	∗485500N	48

84,00mm (3.307") SHAFT

Hsg. Bore	Seal O.D.	Seal Width	Lip Mat'l	Part No.	Type/ Illus.
–	**–**	**.813**		**99331**	**Redi-Sleeve**
99,72	*100,00*	*10,00*	*S*	∗84X100X10★	32
3.926	3.937	.394			
100,00	*100,10*	*10,00*	*S*	710294★	47
3.937	3.941	.394			
100,00	*100,20*	*12,00*	*S*	∗84X100X12★	32
3.937	3.945	.472			
104,00	*0,00*	*10,01*	*V*	228411★	32
4.094	.000	.394			
104,00	*104,28*	*11,00*	*V*	228410★⬅	32
4.094	4.106	.433			
118,00	*118,10*	*7,00*	*V*	710363★⬅	#
4.646	4.650	.276			

3.312" (3-5/16") SHAFT

Hsg. Bore	Seal O.D.	Seal Width	Lip Mat'l	Part No.	Type/ Illus.
–	**–**	**.813**		**99331**	**Redi-Sleeve**
4.249	4.253	.500	S	∗456292	45
4.249	**4.254**	**.500**	**S**	**416292**	**41**
4.249	4.254	.750	S	∗8229	#
4.376	**4.381**	**.500**	**S**	**417491**	**41**
4.376	4.381	.625	S	∗455163	45
4.376	4.381	.625	H	∗455163H	45
4.499	**4.504**	**.468**	**S**	**415085**	**41**
4.499	4.504	.468	S	∗455085	45
4.499	4.504	.468	V	∗455085V	45
4.499	4.504	.468	S	∗475085	47
4.501	4.506	.468	S	456648	45
4.501	4.506	.605	S	370191A	06

For Illustration and Material Data See Technical Section
Designed For A Specific Application - Not Recommended For General Use ➡ Hydrodynamic Lip Design-CW ⬅ Hydrodynamic Lip Design-CCW
⬅➡ Hydrodynamic Lip Design-Bidirectional % External Bore & Flanged O.D.
∗ The U.S. customer service number is 877-4-TIMKEN. The Canadian customer service numbers are 800-565-4927 (English) and 800-565-0438 (French-Canadian). ★ Metric Seal

Hsg. Bore	Seal O.D.	Seal Width	Lip Mat'l	Part No.	Type/ Illus.
3.312" (3-5/16") SHAFT (cont.)					
4.751	**4.756**	**.500**	**S**	**416313**	**41**
4.999	5.004	.468	S	455024	45
5.000	5.006	.937	S	370013A	03
5.125	5.131	.500	S	*457961	45
5.501	5.506	.562	S	*455612	45
5.501	5.506	.562	N	*455612N	45
3.330" SHAFT					
4.125	4.130	.562	S	477055	47
5.045	5.050	.800	S	710088	#
85,00mm (3.346") SHAFT					
–	**–**	**.827**		**99333**	**Redi-Sleeve**
–	**–**	**.827**		**99334**	**Redi-Sleeve**
–	*102,57*	*25,40*	*T*	*100467★➡	#
–	4.038	1.000			
99,72	*100,00*	*9,00*	*S*	*85X100X9★	32
3.926	3.937	.354			
99,72	*100,00*	*10,00*	*S*	*85X100X10★	32
3.926	3.937	.394			
99,72	*100,00*	*12,00*	*S*	*85X100X12★	32
3.926	3.937	.472			
104,72	*105,00*	*12,00*	*S*	*85X105X12★	32
4.123	4.134	.472			
105,00	*105,28*	*10,00*	*S*	85X105X10★	32
4.134	4.145	.394			
105,00	*105,28*	*10,00*	*H*	716102★⬅	32
4.134	4.145	.394			
105,00	*105,28*	*13,00*	*S*	85X105X13★	32
4.134	4.145	.512			
4.135	4.148	.465	N	*3590	#
109,72	*110,00*	*13,00*	*S*	*85X110X13★	32
4.320	4.331	.512			
110,00	*110,20*	*10,00*	*S*	85X110X10★	35
4.331	4.339	.394			
110,00	*110,20*	*12,00*	*V*	*85X110X12V★	32
4.331	4.339	.472			
110,00	*110,28*	*12,00*	*S*	228520★	35
4.331	4.342	.472			
110,00	*110,28*	*12,00*	*S*	85X110X12★	32
4.331	4.342	.472			
110,72	*111,00*	*10,00*	*S*	*85X111X10★	32
4.359	4.370	.394			
113,00	*113,20*	*10,50*	*N*	710330★	#
4.449	4.457	.413			
114,22	*114,50*	*12,00*	*S*	*85X114.5X12★	32
4.497	4.508	.472			
114,72	*115,00*	*15,00*	*S*	*85X115X15★	32
4.517	4.528	.591			
115,00	*115,00*	*13,00*	*S*	85X115X13★	35
4.528	4.528	.512			
115,00	*115,20*	*12,00*	*S*	*85X115X12★	32
4.528	4.535	.472			
115,00	*115,27*	*7,00*	*S*	85X115X7★	32
4.528	4.538	.276			
119,72	*120,00*	*10,00*	*S*	*85X120X10★	32
4.713	4.724	.394			
119,72	*120,00*	*13,00*	*S*	*85X120X13★	32
4.713	4.724	.512			
119,72	*120,00*	*15,00*	*S*	*85X120X15★	32
4.713	4.724	.591			
120,00	*120,28*	*12,00*	*S*	85X120X12★	32
4.724	4.735	.472			
124,72	*125,00*	*13,00*	*S*	*85X125X13★	32
4.910	4.921	.512			
124,72	*125,00*	*14,00*	*S*	*85X125X14★	32
4.910	4.921	.551			
125,00	*125,20*	*12,00*	*S*	85X125X12★	32
4.921	4.929	.472			

Hsg. Bore	Seal O.D.	Seal Width	Lip Mat'l	Part No.	Type/ Illus.
85,00mm (3.346") SHAFT (cont.)					
129,70	*130,00*	*12,00*	*S*	*85X130X12★	32
5.106	5.118	.472			
129,70	*130,00*	*14,00*	*S*	*85X130X14★	32
5.106	5.118	.551			
130,00	*130,15*	*12,70*	*S*	85X130X13★	48
5.118	5.124	.500			
130,00	*130,15*	*12,70*	*S*	*476516★	47
5.118	5.124	.500			
139,70	*140,00*	*12,00*	*S*	*85X140X12★	32
5.500	5.512	.472			
3.350" SHAFT					
4.250	4.280	.635	V	100400V	08
3.375" (3-3/8") SHAFT					
–	**–**	**.375**		***99338**	**Redi-Sleeve**
–	**–**	**.813**		**99337**	**Redi-Sleeve**
3.948	3.955	.375	N	5128N	32
3.948	3.955	.375	S	710077	32
4.125	**4.130**	**.375**	**S**	**415442**	**41**
4.249	4.254	.468	S	476028	47
4.249	4.254	.468	N	*476028N	47
4.249	**4.254**	**.500**	**S**	**416294**	**41**
4.249	4.254	.500	H	*416294H	41
4.249	4.254	.500	N	*416294N	41
4.249	4.254	.500	V	416294V	41
4.249	4.254	.500	S	*456294	45
4.249	4.254	.500	H	*456294H	45
4.249	4.254	.500	N	*456294N	45
4.249	4.254	.500	S	*476294	47
4.249	4.254	.500	S	*486294	48
4.249	4.254	.625	S	*415613	41
4.249	4.254	.625	S	*455613	45
4.249	4.254	.625	S	*475613	47
4.249	4.254	.625	S	*485613	48
4.250	4.255	.280	S	*487319	48
4.275	4.380	.730	S	*8130%	#
4.280	4.285	.406	H	*475996H	47
4.280	4.285	.406	N	*485996N	48
4.370	4.375	.250	S	486567	48
4.376	4.381	.250	S	*47757	4S
4.376	**4.381**	**.375**	**S**	**412473**	**41**
4.376	4.381	.375	S	*472473	47
4.376	4.381	.375	H	*472473H	47
4.376	4.381	.500	S	415894	41
4.376	4.381	.500	S	*455894	45
4.376	4.381	.500	N	*455894N	45
4.376	4.381	.500	S	*475894	47
4.376	4.381	.500	S	*485894	48
4.376	4.381	.562	S	*411414	41
4.376	4.381	.562	N	*411414N	41
4.376	4.381	.562	S	*451414	45
4.376	4.381	.562	H	*451414H	45
4.376	4.381	.562	N	*451414N	45
4.376	4.381	.562	S	*481414	48
4.376	4.381	.562	H	*481414H	48
4.376	4.381	.625	S	*415164	41
4.376	4.381	.625	N	415164N	41
4.376	4.381	.625	S	*455164	45
4.376	4.381	.625	N	*455164N	45
4.499	4.504	.468	S	*415165	41
4.499	4.504	.468	H	*415165H	41
4.499	4.504	.468	S	455165	45
4.499	4.504	.468	N	*455165N	45
4.499	4.504	.468	V	*455165V	45
4.499	4.504	.468	S	*475165	47
4.499	4.504	.468	S	*485165	48
4.500	**4.506**	**.500**	**S**	**417191**	**41**
4.500	4.506	.500	V	*417191V	41

For Illustration and Material Data See Technical Section
Designed For A Specific Application - Not Recommended For General Use ➡ Hydrodynamic Lip Design-CW ⬅ Hydrodynamic Lip Design-CCW % External Bore
* The U.S. customer service number is 877-4-TIMKEN. The Canadian customer service numbers are 800-565-4927 (English) and 800-565-0438 (French-Canadian). ★ Metric Seal

Hsg. Bore	Seal O.D.	Seal Width	Lip Mat'l	Part No.	Type/ Illus.
3.375" (3-3/8") SHAFT (cont.)					
4.500	4.506	.500	S	*457191	45
4.500	4.506	.500	S	*477191	47
4.500	4.506	.500	S	*487191	48
4.500	4.800	.315	S	*200922%	200E
4.501	4.506	.468	S	456585	45
4.501	4.506	.625	S	*55331	5S
4.626	4.631	.437	S	*476319	47
4.626	4.631	.437	S	*486319	48
4.626	4.631	.437	V	*486319V	48
4.626	4.631	.625	S	*455168	45
4.626	4.631	.625	N	*455168N	45
4.626	4.631	.687	N	*7775N	#
4.626	**4.632**	**.500**	**S**	**417354**	**41**
4.626	4.632	.500	S	*457354	45
4.626	4.632	.500	S	*477354	47
4.626	4.632	.500	S	*487354	48
4.688	**4.693**	**.500**	**S**	**455249**	**45**
4.718	4.723	.468	L	*55431	5L
4.751	4.756	.500	S	416321	41
4.751	4.756	.625	S	*416323	41
4.751	4.756	.625	S	*456323	45
4.751	4.756	.625	S	*476323	47
4.751	4.756	.625	S	*486323	48
4.999	**5.004**	**.468**	**S**	**415025**	**41**
4.999	5.004	.468	N	*415025N	41
4.999	5.004	.468	S	*455025	45
4.999	5.004	.468	S	*475025	47
4.999	5.004	.468	S	*485025	48
4.999	5.004	.500	S	*456325	45
5.251	5.256	.468	S	416327	41
5.251	5.256	.468	S	*456327	45
5.251	5.256	.468	S	*476327	47
5.251	5.256	.468	S	*486327	48
86,00mm (3.386") SHAFT					
99,72	*100,00*	*10,00*	*S*	*86X100X10★	32
3.926	3.937	.394			
103,00	*103,23*	*10,00*	*V*	710235★⬅	32
4.055	4.064	.394			
104,00	*104,23*	*11,00*	*V*	710232★⬅	32
4.094	4.104	.433			
3.410" SHAFT					
5.251	5.257	.500	S	*200167	200
87,00mm (3.425") SHAFT					
100,00	*100,20*	*8,00*	*H*	228700★⬅	32
3.937	3.945	.315			
3.437" SHAFT					
–	**–**	**.781**		**99339**	**Redi-Sleeve**
4.249	**4.254**	**.375**	**S**	**418029**	**41**
4.249	**4.254**	**.375**	**V**	***418029V**	**41**
4.249	4.254	.625	S	455499	45
4.499	4.504	.468	S	*455166	45
4.501	4.506	.375	V	417492V	41
4.501	**4.506**	**.375**	**S**	**417492**	**41**
4.501	4.506	.468	S	*416365	41
4.501	4.506	.468	S	*476365	47
4.501	4.506	.625	L	55419	5L
4.625	4.725	.484	S	*84082%	8S
4.626	**4.631**	**.500**	**S**	**417493**	**41**
4.626	4.631	.500	V	*417493V	41
4.755	4.761	.605	S	370047A	06
4.756	**4.761**	**.562**	**S**	**455858**	**45**
4.876	4.881	.500	S	417494	41
4.876	4.881	.625	S	*455341	45
4.999	**5.004**	**.468**	**S**	**455026**	**45**
3.437" SHAFT (cont.)					
5.250	**5.256**	**.468**	**S**	**455471**	**45**
5.501	5.506	.562	S	*455472	45
88,00mm (3.465") SHAFT					
106,00	*106,28*	*8,50*	*V*	710188★⬅	32
4.173	4.184	.335			
107,72	*108,00*	*11,00*	*S*	*88X108X11★	32
4.241	4.252	.433			
108,00	*108,36*	*11,10*	*H*	3772★⬅	35
4.252	4.266	.437			
108,00	*108,36*	*11,10*	*T*	*100239T★⬅	FW-H
4.252	4.266	.437			
110,00	*110,28*	*12,00*	*S*	88X110X12★	35
4.331	4.342	.472			
115,00	*115,20*	*12,00*	*S*	*88X115X12★	32
4.528	4.535	.472			
120,00	*120,20*	*12,00*	*S*	*88X120X12★	32
4.724	4.732	.472			
3.468" (3-15/32") SHAFT					
4.626	4.631	.625	S	2055	47
3.478" SHAFT					
–	–	–	S	800900	VRS1
–	–	–	S	800901	VRS2
–	–	–	V	800904	VRS1
–	**–**	**.781**		**99340**	**Redi-Sleeve**
4.922	4.927	.468	S	*200118	200
3.500" (3-1/2") SHAFT					
–	–	–	S	800900	VRS1
–	–	–	S	800901	VRS2
–	–	–	V	800904	VRS1
–	**–**	**.315**		**99347**	**Redi-Sleeve**
–	**–**	**.813**		**99350**	**Redi-Sleeve**
4.000	–	.313	U	710029	#
4.125	–	.313	U	710030	#
4.125	4.130	.250	S	45525S	4S
4.125	4.130	.250	S	446927	44
4.331	4.346	.472	T	712116➡	FW-H
4.375	4.381	.562	S	*415899	41
4.375	4.381	.562	N	415899N	41
4.375	4.381	.562	S	*455899	45
4.376	4.381	.375	S	*457599	45
4.376	4.381	.375	S	*477599	47
4.376	4.381	.500	V	*3575V	#
4.376	**4.381**	**.500**	**S**	**416624**	**41**
4.376	4.381	.500	N	416624N	41
4.376	4.381	.500	V	*416624V	41
4.376	4.381	.500	S	*456624	45
4.376	4.381	.500	S	*476624	47
4.376	4.381	.500	V	*476624V	47
4.376	4.381	.500	S	*486624	48
4.376	4.381	.625	S	*456068	45
4.437	4.437	.437	L	5965%	8L
4.450	4.455	.525	S	9339S	278
4.450	4.456	.843	S	370179A	07
4.499	4.504	.468	S	415146	41
4.499	4.504	.468	N	*415146N	41
4.499	4.504	.468	S	455146	45
4.499	4.504	.468	V	*455146V	45
4.499	4.504	.468	S	*475146	47
4.499	4.504	.468	N	*475146N	47
4.499	4.504	.468	S	*485146	48
4.499	4.508	.250	S	345146	34
4.500	4.504	.500	U	710015	#
4.500	4.505	.250	S	*8892	#

For Illustration and Material Data See Technical Section
Designed For A Specific Application - Not Recommended For General Use ➡ Hydrodynamic Lip Design-CW ⬅ Hydrodynamic Lip Design-CCW % External Bore
* The U.S. customer service number is 877-4-TIMKEN. The Canadian customer service numbers are 800-565-4927 (English) and 800-565-0438 (French-Canadian). ★ Metric Seal

3.500" (3-1/2") SHAFT (cont.)

Hsg. Bore	Seal O.D.	Seal Width	Lip Mat'l	Part No.	Type/ Illus.
4.500	4.506	.375	S	*477437	47
4.500	4.506	.500	S	*416414	41
4.500	4.506	.500	S	*456414	45
4.500	4.506	.500	S	*476414	47
4.500	4.506	.500	S	*486414	48
4.501	**4.506**	**.468**	**S**	**415991**	**41**
4.501	4.506	.468	N	415991N	41
4.501	4.506	.468	V	415991V	41
4.501	4.506	.468	S	*455991	45
4.501	4.506	.468	N	*475991N	47
4.501	4.506	.468	N	*485991N	48
4.501	4.506	.468	V	712750	41
4.501	4.506	.500	V	4491	#
4.501	4.506	.500	H	*456414H	45
4.501	4.506	.875	S	*15305S	1S
4.501	4.511	.528	S	*355305	35
4.501	4.511	.528	N	*355305N	35
4.543	4.558	.788	S	370132A	07
4.600	6.625	.531	S	*6245S	#
4.625	**4.631**	**.500**	**S**	**417196**	**41**
4.625	4.631	.500	V	*417196V	41
4.625	4.631	.500	S	*457196	45
4.625	4.631	.500	S	*477196	47
4.625	4.631	.500	S	*487196	48
4.626	4.631	.437	S	*476328	47
4.626	4.631	.437	S	*486328	48
4.626	4.631	.625	S	415170	41
4.626	4.631	.625	S	*455170	45
4.626	4.631	.625	N	*455170N	45
4.750	4.756	.500	S	*475437	47
4.750	4.756	.500	S	*485437	48
4.751	4.756	.375	N	476424N	47
4.751	**4.756**	**.500**	**S**	**415437**	**41**
4.751	4.756	.500	S	*455437	45
4.751	4.756	.500	N	455437N	45
4.751	4.756	.625	S	*55173	5S
4.751	4.756	.625	S	*415173	41
4.751	4.756	.625	N	*415173N	41
4.751	4.756	.625	S	455173	45
4.751	4.756	.625	N	*455173N	45
4.751	4.756	.625	S	*475173	47
4.751	4.756	.625	S	*485173	48
4.751	4.757	.605	S	370169A	07
4.840	4.848	.897	S	*2910	#
4.841	4.848	.875	S	6638S	#
4.842	4.847	.910	T	380001A	10
4.842	4.848	.875	S	*8880	#
4.842	4.848	.925	S	370001A	09
4.864	4.964	.321	S	*200961%	200E
4.864	4.964	.321	S	*200204	200
4.875	**4.881**	**.500**	**S**	**417198**	**41**
4.875	4.881	.625	S	*455255	45
4.875	4.881	.925	S	*7955	39
4.921	5.021	.321	S	*200878%	200E
4.999	**5.004**	**.468**	**S**	**415027**	**41**
4.999	5.004	.468	H	415027H	41
4.999	5.004	.468	N	415027N	41
4.999	5.004	.468	S	455027	45
4.999	5.004	.468	H	*455027H	45
4.999	5.004	.468	N	455027N	45
4.999	5.004	.468	S	*475027	47
4.999	5.004	.468	S	*485027	48
4.999	5.004	.468	N	*485027N	48
4.999	5.004	.500	N	*416331N	41
4.999	5.004	.500	S	*456331	45
4.999	5.004	.500	H	*456331H	45
5.000	5.006	1.000	S	370002A	03
5.126	**5.131**	**.500**	**S**	**417495**	**41**
5.126	5.131	.625	S	*415319	41
5.126	5.131	.625	N	*415319N	41
5.126	5.131	.625	S	*455319	45
5.126	5.131	.625	N	*475319N	47

3.500" (3-1/2") SHAFT (cont.)

Hsg. Bore	Seal O.D.	Seal Width	Lip Mat'l	Part No.	Type/ Illus.
5.126	5.131	.625	N	715319	47
5.250	5.256	.500	N	*3814N	#
5.250	5.258	.562	S	6612S	#
5.251	**5.256**	**.468**	**S**	**415559**	**41**
5.251	5.256	.468	S	*455559	45
5.251	5.256	.468	S	*475559	47
5.251	5.256	.468	S	*485559	48
5.500	**5.505**	**.500**	**S**	**417496**	**41**
5.501	5.506	.562	S	*415262	41
5.501	5.506	.562	S	*455262	45
5.501	5.506	.562	S	*475262	47
5.501	5.506	.562	S	*485262	48
5.750	5.756	.875	L	*5961	91
5.751	5.756	.562	S	*415396	41
5.751	**5.756**	**.562**	**S**	**455396**	**45**
5.751	5.756	.562	S	*475396	47
5.751	5.756	.562	S	*485396	48
5.906	7.500	.600	N	*4409N	#
6.000	6.008	1.546	S	*712130	#

89,00mm (3.504") SHAFT

–	–	–	S	800900	VRS1
–	–	–	S	800901	VRS2
–	–	–	V	800904	VRS1
–	**–**	**.315**		**99347**	**Redi-Sleeve**
–	**–**	**.626**		**99349**	**Redi-Sleeve**
–	**–**	**.813**		**99350**	**Redi-Sleeve**
105,00	*105,20*	*10,00*	*V*	710189★⬅	47
4.134	4.142	.394			
109,00	*109,20*	*9,00*	*H*	229004★⬅	32
4.291	4.299	.354			

3.506" SHAFT

.000	4.117	.453	S	710514	41

3.539" SHAFT

5.277	5.291	.604	V	370212A	07

90,00mm (3.543") SHAFT

–	–	–	S	800900	VRS1
–	–	–	S	800901	VRS2
–	–	–	V	800904	VRS1
–	**–**	**.528**		***99353**	**Redi-Sleeve**
–	**–**	**.710**		**99351**	**Redi-Sleeve**
–	**–**	**.906**		**99354**	**Redi-Sleeve**
0,00	*120,00*	*16,00*	*V*	710454★	#
.000	4.724	.630			
99,72	*100,00*	*7,00*	*S*	*90X100X7★	32
3.926	3.937	.276			
99,72	*100,00*	*12,00*	*S*	*90X100X12★	32
3.926	3.937	.472			
104,00	*104,10*	*11,00*	*V*	710237★⬅	32
4.094	4.098	.433			
104,72	*105,00*	*12,00*	*S*	*90X105X12★	32
4.123	4.134	.472			
104,72	*105,00*	*13,00*	*S*	*90X105X13★	32
4.123	4.134	.512			
108,00	*108,23*	*10,00*	*N*	710219★⬅	32
4.252	4.261	.394			
109,72	*110,00*	*10,00*	*S*	*90X110X10★	32
4.320	4.331	.394			
110,00	*110,20*	*9,00*	*H*	229006★⬅	32
4.331	4.339	.354			
110,00	*110,20*	*12,00*	*S*	90X110X12★	35
4.331	4.339	.472			

For Illustration and Material Data See Technical Section
Designed For A Specific Application - Not Recommended For General Use ⬅ Hydrodynamic Lip Design-CCW % External Bore
* The U.S. customer service number is 877-4-TIMKEN. The Canadian customer service numbers are 800-565-4927 (English) and 800-565-0438 (French-Canadian). ★ Metric Seal

Hsg. Bore	Seal O.D.	Seal Width	Lip Mat'l	Part No.	Type/ Illus.
90,00mm (3.543") SHAFT (cont.)					
110,00	*110,20*	*12,00*	*V*	*90X110X12V★	32
4.331	4.339	.472			
110,00	*110,31*	*8,50*	*H*	229010★⬅	32
4.331	4.343	.335			
110,00	*110,31*	*12,00*	*V*	229005★⬅	32
4.331	4.343	.472			
110,00	*110,31*	*13,00*	*S*	*90X110X13★	35
4.331	4.343	.512			
110,00	*110,40*	*12,00*	*T*	712124★➡	FW-H
4.331	4.346	.472			
111,72	*112,00*	*12,00*	*S*	*90X112X12★	32
4.398	4.409	.472			
112,42	*112,70*	*13,00*	*S*	*90X112.7X13★	32
4.426	4.437	.512			
114,72	*115,00*	*10,00*	*S*	*90X115X10★	32
4.517	4.528	.394			
114,72	*115,00*	*13,00*	*S*	*90X115X13★	32
4.517	4.528	.512			
115,00	*115,14*	*17,12*	*S*	*4789S★⬅➡	#
4.528	4.533	.674			
115,00	*115,20*	*12,00*	*S*	90X115X12★	32
4.528	4.535	.472			
117,72	*118,00*	*12,00*	*S*	*90X118X12★	32
4.635	4.646	.472			
119,72	*120,00*	*13,00*	*S*	*90X120X13★	32
4.713	4.724	.512			
120,00	*120,20*	*12,00*	*V*	*90X120X12V★	35
4.724	4.732	.472			
120,00	*120,28*	*12,00*	*S*	90X120X12★⬅➡	32
4.724	4.735	.472			
124,72	*125,00*	*15,00*	*S*	*90X125X15★	32
4.910	4.921	.591			
125,00	*125,20*	*12,00*	*S*	*90X125X12★	32
4.921	4.929	.472			
125,00	*125,30*	*13,00*	*S*	90X125X13★	32
4.921	4.933	.512			
125,00	*125,70*	*7,00*	*S*	90X125X7★	32
4.921	4.949	.276			
129,70	*130,00*	*10,00*	*S*	*90X130X10★	32
5.106	5.118	.394			
129,70	*130,00*	*13,00*	*S*	*90X130X13★	32
5.106	5.118	.512			
130,00	*130,20*	*12,00*	*S*	*90X130X12★	32
5.118	5.126	.472			
134,70	*135,00*	*13,00*	*S*	*90X135X13★	32
5.303	5.315	.512			
135,00	*135,20*	*12,00*	*S*	*90X135X12★	32
5.315	5.323	.472			
140,00	*140,20*	*12,00*	*S*	*90X140X12★	32
5.512	5.520	.472			
145,00	*145,20*	*14,00*	*S*	90X145X14★	32
5.709	5.717	.551			
157,86	*158,00*	*14,27*	*T*	39865★➡	#
6.215	6.220	.562			
159,70	*160,00*	*10,00*	*S*	*90X160X10★	32
6.287	6.299	.394			
3.550" SHAFT					
–	–	–	S	800900	VRS1
–	–	–	S	800901	VRS2
–	–	–	V	800904	VRS1
4.376	4.381	.375	N	*455923N	45
3.557" SHAFT					
–	–	–	S	800900	VRS1
–	–	–	S	800901	VRS2
–	–	–	V	800904	VRS1
4.530	4.530	.320	S	*8480	#

Hsg. Bore	Seal O.D.	Seal Width	Lip Mat'l	Part No.	Type/ Illus.
3.562" (3-9/16") SHAFT					
–	–	–	S	800900	VRS1
–	–	–	S	800901	VRS2
–	–	–	V	800904	VRS1
–	**–**	**.813**		**99356**	**Redi-Sleeve**
4.499	**4.504**	**.468**	**S**	**415498**	**41**
4.499	4.504	.468	S	*455498	45
4.499	4.504	.468	N	*455498N	45
4.499	4.504	.468	S	*485498	48
4.500	4.506	.500	V	*416113V	41
4.500	4.506	.500	S	*456113	45
4.500	4.506	.500	N	*456113N	45
4.625	**4.631**	**.500**	**S**	**415711**	**41**
4.626	4.631	.562	N	*476591N	47
4.751	4.756	.500	S	417497	41
4.751	4.756	.625	S	*455174	45
4.755	4.761	.550	S	9584&	74
4.876	4.881	.500	S	417498	41
4.999	5.004	.468	L	55028	5L
5.751	5.756	.562	S	*455402	45
3.574" SHAFT					
–	–	–	S	800900	VRS1
–	–	–	S	800901	VRS2
–	–	–	V	800904	VRS1
4.756	4.761	.550	N	*4173	#
91,00mm (3.583") SHAFT					
–	–	–	S	800900	VRS1
–	–	–	S	800901	VRS2
–	–	–	V	800904	VRS1
110,00	*110,26*	*8,50*	*V*	229210★⬅➡	32
4.331	4.341	.335			
111,00	*111,13*	*10,01*	*T*	*100052T★⬅	FW-H
4.370	4.375	.394			
111,00	*111,20*	*10,00*	*V*	710056★⬅	47
4.370	4.378	.394			
3.620" SHAFT					
–	–	–	S	800900	VRS1
–	–	–	S	800901	VRS2
–	–	–	V	800904	VRS1
–	**–**	**.811**		***99360**	**Redi-Sleeve**
4.625	4.630	.400	T	39882➡	FW-H
92,00mm (3.622") SHAFT					
–	–	–	S	800900	VRS1
–	–	–	S	800901	VRS2
–	–	–	V	800904	VRS1
–	**–**	**.811**		***99360**	**Redi-Sleeve**
110,00	*110,29*	*10,00*	*H*	355660H★	35
4.331	4.342	.394			
119,72	*120,00*	*12,00*	*S*	*92X120X12★	32
4.713	4.724	.472			
120,00	*120,24*	*13,00*	*S*	92X120X13★	35
4.724	4.734	.512			
3.625" (3-5/8") SHAFT					
–	–	–	S	800900	VRS1
–	–	–	S	800901	VRS2
–	–	–	V	800904	VRS1
–	**–**	**.500**		**99363**	**Redi-Sleeve**
–	**–**	**.813**		**99362**	**Redi-Sleeve**
4.240	4.256	.390	V	3909⬅	35
4.240	4.256	.390	T	*100204T⬅	FW-H
4.249	4.254	.250	S	*47010S	4S

For Illustration and Material Data See Technical Section
Designed For A Specific Application - Not Recommended For General Use ➡ Hydrodynamic Lip Design-CW ⬅ Hydrodynamic Lip Design-CCW
⬅➡ Hydrodynamic Lip Design-Bidirectional & Flanged O.D.
* The U.S. customer service number is 877-4-TIMKEN. The Canadian customer service numbers are 800-565-4927 (English) and 800-565-0438 (French-Canadian). ★ Metric Seal

Hsg. Bore	Seal O.D.	Seal Width	Lip Mat'l	Part No.	Type/ Illus.
3.625" (3-5/8") SHAFT (cont.)					
4.375	4.381	.375	S	*456744	45
4.375	4.381	.375	N	456744N	45
4.376	**4.381**	**.375**	**S**	**417698**	**41**
4.499	**4.504**	**.468**	**S**	**415389**	**41**
4.499	4.504	.468	N	415389N	41
4.499	4.504	.468	S	*455389	45
4.499	4.504	.468	H	*455389H	45
4.499	4.504	.468	V	*455389V	45
4.499	4.504	.468	S	*475389	47
4.499	4.504	.468	N	*475389N	47
4.499	4.504	.468	S	*485389	48
4.624	4.629	.500	S	*456003	45
4.624	4.630	.500	N	*487397N	48
4.624	4.630	.500	V	487397V➡	48
4.625	**4.631**	**.437**	**S**	**416332**	**41**
4.625	4.631	.500	S	416047	41
4.625	4.631	.500	S	*456047	45
4.625	4.631	.500	S	*476047	47
4.625	4.631	.500	S	*486047	48
4.625	4.631	.625	N	*415172N	41
4.626	4.631	.437	S	*476332	47
4.626	4.631	.437	H	*476332H	47
4.626	4.631	.437	N	*476332N	47
4.626	4.631	.437	S	*486332	48
4.626	4.631	.437	N	*486332N	48
4.626	4.631	.625	S	*415172	41
4.626	4.631	.625	V	*415172V	41
4.626	4.631	.625	S	*455172	45
4.626	4.631	.625	N	*455172N	45
4.626	4.631	.625	V	*455172V	45
4.695	4.810	.395	S	200603%	200E
4.725	4.730	.312	S	*255833	25
4.751	4.756	.484	S	*416333	41
4.751	4.756	.500	T	39703➡	FW-H
4.751	4.756	.500	T	39813➡	W-H
4.751	**4.756**	**.500**	**S**	**415937**	**41**
4.751	4.756	.500	S	*455937	45
4.751	4.756	.500	S	*475937	47
4.751	4.756	.500	H	*475937H	47
4.751	4.756	.500	S	*485937	48
4.751	4.756	.562	S	*455486	45
4.751	4.756	.625	S	*415175	41
4.751	4.756	.625	S	*455175	45
4.751	4.756	.625	S	*475175	47
4.751	4.756	.625	S	*485175	48
4.810	4.823	.921	S	370012A	07
4.839	4.844	.500	L	55353	5L
4.874	4.879	.585	S	485497	48
4.874	4.879	.625	S	*455947	45
4.875	**4.881**	**.500**	**S**	**417355**	**41**
4.875	4.881	.500	S	*457355	45
4.875	4.881	.500	S	*477355	47
4.875	4.881	.500	S	*487355	48
4.876	4.881	.625	S	*415181	41
4.876	4.881	.625	S	*455181	45
4.999	5.004	.468	S	*415029	41
4.999	5.004	.468	S	*455029	45
4.999	5.004	.468	H	*455029H	45
4.999	5.004	.468	S	*475029	47
4.999	5.004	.468	S	*485029	48
4.999	**5.004**	**.500**	**S**	**416125**	**41**
4.999	5.004	.500	S	*456125	45
4.999	5.004	.500	S	*476125	47
4.999	5.004	.500	S	*486125	48
5.000	5.014	.875	S	370011A	05
5.251	**5.256**	**.437**	**S**	**417499**	**41**
5.251	5.256	.468	S	*416335	41
5.251	5.256	.468	N	*416335N	41
5.251	5.256	.468	V	*416335V	41
5.251	5.256	.468	S	*456335	45
5.251	5.256	.468	S	*476335	47
5.251	5.256	.468	S	*486335	48
3.625" (3-5/8") SHAFT (cont.)					
5.375	5.381	.500	S	415832	41
5.375	5.381	.500	S	*455832	45
5.501	5.506	.500	S	417500	41
5.501	5.506	.562	S	*416389	41
5.501	5.506	.562	S	*456389	45
5.501	5.506	.562	S	*476389	47
5.751	5.756	.562	S	415436	41
5.751	5.756	.562	S	*455436	45
5.751	5.756	.562	S	*475436	47
5.751	5.756	.562	S	*485436	48
6.000	6.006	.500	S	*417650	41
3.655" SHAFT					
–	–	–	S	800900	VRS1
–	–	–	S	800901	VRS2
–	–	–	V	800904	VRS1
4.620	4.631	.270	S	*4203⬅➡	#
93,00mm (3.661") SHAFT					
–	–	–	S	800950	VRS1
–	–	–	V	800954	VRS1
114,00	*114,20*	*14,00*	*S*	710288★⬅	32
4.488	4.496	.551			
154,00	*154,10*	*8,00*	*S*	710266★	#
6.063	6.067	.315			
3.687" (3-11/16") SHAFT					
–	–	–	S	800950	VRS1
–	–	–	V	800954	VRS1
–	**–**	**.313**		**99368**	**Redi-Sleeve**
–	**–**	**.813**		***99359**	**Redi-Sleeve**
–	**–**	**.813**		***99365**	**Redi-Sleeve**
4.501	4.506	.500	V	456919V	45
4.501	4.506	.500	S	416919	41
4.501	**4.506**	**.500**	**N**	**416919N**	**41**
4.626	4.631	.625	S	*476124	47
4.750	**4.756**	**.500**	**S**	**417501**	**41**
4.999	5.004	.468	L	55030	5L
5.250	5.256	.468	S	416670	41
5.250	5.256	.468	N	*416670N	41
5.501	5.506	.500	S	417502	41
5.501	5.506	.562	S	*415269	41
3.720" SHAFT					
–	–	–	S	800950	VRS1
–	–	–	V	800954	VRS1
4.756	4.766	.640	S	*77993T	7S
3.736" SHAFT					
–	–	–	S	800950	VRS1
–	–	–	V	800954	VRS1
120,00	*120,40*	*13,00*	*T*	712119★➡	FW-H
4.724	4.740	.512			
3.738" SHAFT					
3.750	4.500	.500	S	*7184%	#
95,00mm (3.740") SHAFT					
–	–	–	S	800950	VRS1
–	–	–	V	800954	VRS1
–	**–**	**.344**		**99374**	**Redi-Sleeve**
–	**–**	**.469**		**99364**	**Redi-Sleeve**
–	**–**	**.827**		**99369**	**Redi-Sleeve**

For Illustration and Material Data See Technical Section
Designed For A Specific Application - Not Recommended For General Use ➡ Hydrodynamic Lip Design-CW ⬅ Hydrodynamic Lip Design-CCW
⬅➡ Hydrodynamic Lip Design-Bidirectional % External Bore
* The U.S. customer service number is 877-4-TIMKEN. The Canadian customer service numbers are 800-565-4927 (English) and 800-565-0438 (French-Canadian). ★ Metric Seal

Hsg. Bore	Seal O.D.	Seal Width	Lip Mat'l	Part No.	Type/ Illus.
95,00mm (3.740") SHAFT (cont.)					
104,72	*105,00*	*13,00*	*S*	*95X105X13★	32
4.123	4.134	.512			
109,72	*110,00*	*11,00*	*S*	*95X110X11★	32
4.320	4.331	.433			
109,72	*110,00*	*12,00*	*S*	*95X110X12★	32
4.320	4.331	.472			
110,00	*110,20*	*10,00*	*S*	95X110X10★	32
4.331	4.339	.394			
110,00	*110,26*	*11,00*	*S*	717005★⬅	32
4.331	4.341	.433			
113,00	*113,10*	*10,00*	*V*	710352★⬅	47
4.449	4.453	.394			
114,99	*115,32*	*12,50*	*T*	*100203T★⬅	FW-H
4.527	4.540	.492			
115,00	*115,20*	*13,00*	*V*	*95X115X13V★	32
4.528	4.535	.512			
115,00	*115,25*	*10,00*	*S*	717006★	45
4.528	4.537	.394			
115,00	*115,28*	*12,00*	*S*	95X115X12★	35
4.528	4.539	.472			
115,00	*115,28*	*13,00*	*S*	*95X115X13★	35
4.528	4.539	.512			
115,00	*115,32*	*12,12*	*T*	*600305★⬅	#
4.528	4.540	.477			
115,00	*115,31*	*12,50*	*V*	4359V★⬅	32
4.528	4.540	.492			
118,00	*118,16*	*8,50*	*H*	710060★⬅	32
4.646	4.652	.335			
119,72	*120,00*	*8,00*	*S*	*95X120X8★	32
4.713	4.724	.315			
119,72	*120,00*	*13,00*	*S*	*95X120X13★	32
4.713	4.724	.512			
120,00	*120,20*	*12,00*	*V*	*95X120X12V★	35
4.724	4.732	.472			
120,00	*120,28*	*12,00*	*S*	95X120X12★	32
4.724	4.735	.472			
124,72	*125,00*	*13,00*	*S*	*95X125X13★	32
4.910	4.921	.512			
125,00	*125,28*	*12,00*	*S*	95X125X12★	35
4.921	4.932	.472			
129,70	*130,00*	*13,00*	*S*	*95X130X13★	32
5.106	5.118	.512			
130,00	*130,28*	*12,00*	*S*	95X130X12★	32
5.118	5.129	.472			
130,00	*130,28*	*12,00*	*S*	229520★	35
5.118	5.129	.472			
132,00	*132,26*	*12,00*	*S*	710085★	#
5.197	5.207	.472			
134,70	*135,00*	*13,00*	*S*	*95X135X13★	32
5.303	5.315	.512			
172,00	*172,09*	*28,00*	*T*	39926★➡	W-H
6.772	6.775	1.102			
3.750" (3-3/4") SHAFT					
–	–	–	S	800950	VRS1
–	–	–	V	800954	VRS1
–	**–**	**.344**		**99367**	**Redi-Sleeve**
–	**–**	**.563**		**99376**	**Redi-Sleeve**
–	**–**	**.688**		**99372**	**Redi-Sleeve**
4.375	–	.312	U	710035	#
4.499	4.506	.468	V	*4489V	96
4.499	4.506	.468	S	415983	41
4.499	4.506	.468	N	415983N	41
4.499	4.506	.468	V	415983V	41
4.499	4.506	.468	V	714489	96
4.500	4.506	.468	V	713750	69
4.501	4.506	.362	V	2377	35
4.501	4.506	.362	T	*100205T⬅	FW-H
4.624	4.630	.535	S	*8425	#

Hsg. Bore	Seal O.D.	Seal Width	Lip Mat'l	Part No.	Type/ Illus.
3.750" (3-3/4") SHAFT (cont.)					
4.626	4.631	.437	S	*476336	47
4.626	4.631	.437	S	*486336	48
4.626	4.632	.500	S	416041	41
4.626	4.632	.500	S	*456041	45
4.626	4.632	.500	S	*476041	47
4.626	4.632	.500	S	*486041	48
95,25mm (3.750") SHAFT					
120,37	*120,65*	*12,70*	*S*	*95.25X120.65X12.7★	32
4.739	4.750	.500			
3.750" (3-3/4") SHAFT					
4.750	4.756	.375	V	*486923V	48
4.750	4.756	.500	V	3893V	45
4.750	4.756	.500	T	39608⬅	DW-H
4.750	4.756	.500	T	39705➡	FW-H
4.750	4.756	.500	T	39837⬅	W-H
4.751	4.756	.375	N	*486544N	48
4.751	4.756	.484	N	*415963N	41
4.751	4.756	.484	V	*415963V	41
4.751	4.756	.484	H	*455963H	45
4.751	4.756	.484	N	*455963N	45
4.751	4.756	.500	H	2218⬅	47
4.751	4.756	.500	V	*4936V⬅	#
4.751	**4.756**	**.500**	**S**	**415379**	**41**
4.751	4.756	.500	H	*415379H	41
4.751	4.756	.500	N	*415379N	41
4.751	4.756	.500	V	415379V	41
4.751	4.756	.500	S	455379	45
4.751	4.756	.500	H	*455379H	45
4.751	4.756	.500	N	*455379N	45
4.751	4.756	.500	V	455379V	45
4.751	4.756	.500	S	*475379	47
4.751	4.756	.500	N	*475379N	47
4.751	4.756	.500	S	*485379	48
4.751	4.756	.500	N	*485379N	48
4.751	4.756	.625	S	*415177	41
4.751	4.756	.625	S	*455177	45
4.751	4.756	.625	S	*475177	47
4.751	4.756	.625	S	*485177	48
4.751	4.756	.750	N	*7776N	#
4.751	4.756	.875	S	*15379S	1S
4.751	4.757	.875	S	*75963S	7S
4.875	**4.881**	**.500**	**S**	**417205**	**41**
4.875	4.881	.500	S	*457205	45
4.875	4.881	.500	S	*477205	47
4.875	4.881	.500	S	*487205	48
4.876	4.881	.625	S	*415183	41
4.876	4.881	.625	S	*455183	45
4.999	5.004	.250	S	45031S	4S
4.999	5.004	.468	S	*415031	41
4.999	5.004	.468	H	*415031H	41
4.999	5.004	.468	N	*415031N	41
4.999	5.004	.468	S	455031	45
4.999	5.004	.468	N	*455031N	45
4.999	5.004	.468	S	*475031	47
4.999	5.004	.468	V	*475031V	47
4.999	5.004	.468	S	*485031	48
4.999	**5.004**	**.500**	**S**	**416339**	**41**
4.999	5.004	.500	N	*416339N	41
4.999	5.004	.500	S	*456339	45
4.999	5.004	.500	S	*476339	47
4.999	5.004	.500	S	*486339	48
5.000	5.004	.620	S	*8338	39
5.000	5.009	.370	S	*498040	49
5.251	**5.256**	**.468**	**S**	**415150**	**41**
5.251	5.256	.468	S	*455150	45
5.251	5.256	.468	V	*455150V	45
5.251	5.256	.468	S	*475150	47
5.251	5.256	.468	S	*485150	48

For Illustration and Material Data See Technical Section
Designed For A Specific Application - Not Recommended For General Use ➡ Hydrodynamic Lip Design-CW ⬅ Hydrodynamic Lip Design-CCW
* The U.S. customer service number is 877-4-TIMKEN. The Canadian customer service numbers are 800-565-4927 (English) and 800-565-0438 (French-Canadian). ★ Metric Seal

3.750" (3-3/4") SHAFT (cont.)

Hsg. Bore	Seal O.D.	Seal Width	Lip Mat'l	Part No.	Type/ Illus.
5.375	5.381	.750	S	*7230	#
5.376	**5.381**	**.500**	**S**	**416127**	**41**
5.376	5.381	.500	S	*456127	45
5.501	5.506	.500	S	417503	41
5.501	5.506	.562	S	*415423	41
5.501	5.506	.562	S	*455423	45
5.501	5.506	.562	S	*475423	47
5.501	5.506	.562	S	*485423	48
5.751	5.756	.562	S	*415852	41
5.751	5.756	.562	S	*455852	45
5.751	5.756	.562	S	*475852	47
5.751	5.756	.562	S	*485852	48

3.753" SHAFT

Hsg. Bore	Seal O.D.	Seal Width	Lip Mat'l	Part No.	Type/ Illus.
–	–	–	S	800950	VRS1
–	–	–	V	800954	VRS1
–	**–**	**.344**		**99367**	**Redi-Sleeve**
–	**–**	**.688**		**99372**	**Redi-Sleeve**
4.720	4.730	.552	V	*2867V	#

96,00mm (3.780") SHAFT

Hsg. Bore	Seal O.D.	Seal Width	Lip Mat'l	Part No.	Type/ Illus.
–	–	–	S	800950	VRS1
–	–	–	V	800954	VRS1
116,00	*116,26*	*9,00*	*V*	710262★⬅	32
4.567	4.577	.354			
117,00	*117,28*	*12,00*	*V*	710205★⬅	32
4.606	4.617	.472			

3.797" SHAFT

Hsg. Bore	Seal O.D.	Seal Width	Lip Mat'l	Part No.	Type/ Illus.
–	–	–	S	800950	VRS1
–	–	–	V	800954	VRS1
4.501	4.506	.250	S	8370S	4S

3.800" SHAFT

Hsg. Bore	Seal O.D.	Seal Width	Lip Mat'l	Part No.	Type/ Illus.
.000	4.590	.394	V	710520	32

3.812" (3-13/16") SHAFT

Hsg. Bore	Seal O.D.	Seal Width	Lip Mat'l	Part No.	Type/ Illus.
–	–	–	S	800950	VRS1
–	–	–	V	800954	VRS1
4.751	4.756	.625	S	*455178	45
4.876	**4.881**	**.500**	**S**	**417504**	**41**
4.999	**5.004**	**.468**	**S**	**455032**	**45**
5.251	**5.256**	**.468**	**S**	**455189**	**45**
5.251	5.256	.468	N	*455189N	45

98,00mm (3.858") SHAFT

Hsg. Bore	Seal O.D.	Seal Width	Lip Mat'l	Part No.	Type/ Illus.
–	–	–	S	800950	VRS1
–	–	–	V	800954	VRS1
114,94	*115,32*	*15,75*	*T*	100085★⬅	#
4.525	4.540	.620			
120,00	*120,20*	*13,00*	*S*	98X120X13★	35
4.724	4.732	.512			

3.875" (3-7/8") SHAFT

Hsg. Bore	Seal O.D.	Seal Width	Lip Mat'l	Part No.	Type/ Illus.
–	–	–	S	801000	VRS1
–	–	–	V	801004	VRS1
–	**–**	**.813**		**99387**	**Redi-Sleeve**
4.626	4.631	.437	S	*476341	47
4.626	4.631	.625	S	*416342	41
4.626	4.631	.625	N	*416342N	41
4.686	4.691	.375	N	*476098N	47
4.750	4.756	.375	S	*476985	47
4.750	4.756	.375	S	*486985	48
4.750	4.756	.375	V	*486985V	48

3.875" (3-7/8") SHAFT (cont.)

Hsg. Bore	Seal O.D.	Seal Width	Lip Mat'l	Part No.	Type/ Illus.
4.750	4.756	.500	V	*4340V	#
4.751	**4.756**	**.375**	**S**	**417210**	**41**
4.751	4.756	.484	S	*456343	45
4.751	4.756	.500	S	*456981	45
4.751	4.756	.625	S	*415179	41
4.751	4.756	.625	S	*455179	45
4.751	4.756	.625	N	*455179N	45
4.751	4.756	.625	S	*475179	47
4.751	4.756	.625	S	*485179	48
4.751	4.756	.625	N	*485179N	48
4.875	4.881	.500	S	*457211	45
4.875	**4.881**	**.500**	**S**	**417211**	**41**
4.875	4.881	.500	S	*477211	47
4.875	4.881	.500	S	*487211	48
4.876	4.881	.500	S	*456626	45
4.876	4.881	.625	S	*415185	41
4.876	4.881	.625	H	*415185H	41
4.876	4.881	.625	N	*415185N	41
4.876	4.881	.625	S	*455185	45
4.876	4.881	.625	N	*455185N	45
4.999	5.004	.468	S	*415033	41
4.999	5.004	.468	N	*415033N	41
4.999	5.004	.468	S	455033	45
4.999	5.004	.468	S	*475033	47
4.999	5.004	.468	S	*485033	48
4.999	5.004	.468	V	*485033V	48
4.999	**5.004**	**.500**	**S**	**416345**	**41**
4.999	5.004	.500	H	*416345H	41
4.999	5.004	.500	S	*456345	45
4.999	5.004	.500	N	*456345N	45
4.999	5.004	.500	S	*476345	47
4.999	5.004	.500	S	*486345	48
5.125	**5.131**	**.500**	**S**	**415697**	**41**
5.125	5.131	.500	S	*455697	45
5.125	5.131	.500	S	*475697	47
5.125	5.131	.500	S	*485697	48
5.126	5.131	.625	S	*415547	41
5.126	5.131	.625	S	455547	45
5.126	5.131	.625	N	*455547N	45
5.126	5.132	.605	S	370033A	06
5.250	**5.256**	**.500**	**S**	**417366**	**41**
5.250	5.256	.500	S	*457366	45
5.250	5.256	.500	S	*477366	47
5.250	5.256	.500	S	*487366	48
5.251	5.256	.468	S	*415148	41
5.251	5.256	.468	S	*455148	45
5.251	5.256	.468	S	*475148	47
5.251	5.256	.468	S	*485148	48
5.376	**5.381**	**.500**	**S**	**415958**	**41**
5.376	5.381	.500	S	455958	45
5.376	5.381	.985	S	370165A	03
5.501	**5.506**	**.500**	**S**	**417505**	**41**
5.501	5.506	.562	S	*416128	41
5.501	5.506	.562	S	*456128	45
5.501	5.506	.562	S	*476128	47
5.501	5.506	.562	S	*486128	48
5.501	5.515	.875	S	370024A	11
5.690	5.706	.770	T	380023A	10
5.690	5.706	.875	S	370023A	11
5.751	5.756	.562	S	416043	41
5.751	5.756	.562	S	*456043	45
5.751	5.756	.562	S	*476043	47
5.751	5.756	.562	S	*486043	48
6.000	6.006	.390	S	*200188	200
6.064	6.070	.625	S	*456676	45

3.880" SHAFT

Hsg. Bore	Seal O.D.	Seal Width	Lip Mat'l	Part No.	Type/ Illus.
–	–	–	S	801000	VRS1
–	–	–	V	801004	VRS1
5.690	5.695	.500	S	456618	45

For Illustration and Material Data See Technical Section
Designed For A Specific Application - Not Recommended For General Use ⬅ Hydrodynamic Lip Design-CCW
* The U.S. customer service number is 877-4-TIMKEN. The Canadian customer service numbers are 800-565-4927 (English) and 800-565-0438 (French-Canadian). ★ Metric Seal

Hsg. Bore	Seal O.D.	Seal Width	Lip Mat'l	Part No.	Type/ Illus.
3.908" SHAFT					
–	–	–	S	801000	VRS1
–	–	–	V	801004	VRS1
4.875	4.881	.500	S	*416037	41
3.934" SHAFT					
–	–	–	S	801000	VRS1
–	–	–	V	801004	VRS1
5.905	5.911	.500	S	476517	47
100,00mm (3.937") SHAFT					
–	–	–	S	801000	VRS1
–	–	–	V	801004	VRS1
–	**–**	**.813**		**99393**	**Redi-Sleeve**
113,72	*114,00*	*10,00*	*S*	*100X114X10★	32
4.477	4.488	.394			
114,00	*114,10*	*12,00*	*S*	710410★	47
4.488	4.492	.472			
114,72	*115,00*	*9,00*	*S*	*100X115X9★	32
4.517	4.528	.354			
114,72	*115,00*	*10,00*	*S*	*100X115X10★	32
4.517	4.528	.394			
114,72	*115,00*	*12,00*	*S*	*100X115X12★	32
4.517	4.528	.472			
119,72	*120,00*	*11,00*	*S*	*100X120X11★	32
4.713	4.724	.433			
119,72	*120,00*	*13,00*	*S*	*100X120X13★	32
4.713	4.724	.512			
120,00	*120,20*	*12,00*	*V*	*100X120X12V★	32
4.724	4.732	.472			
120,00	*120,25*	*11,00*	*T*	*712105★⬅	W
4.724	4.734	.433			
120,00	*120,12*	*11,00*	*H*	231004★	32
4.724	4.735	.433			
120,00	*120,28*	*12,00*	*S*	231002★	35
4.724	4.735	.472			
120,00	*120,28*	*12,00*	*S*	100X120X12★	32
4.724	4.735	.472			
120,00	*120,30*	*10,00*	*S*	100X120X10★	35
4.724	4.736	.394			
123,85	***123,98***	***12,70***	***S***	**417967★**	**41**
4.876	**4.881**	**.500**			
123,85	*123,98*	*12,70*	*S*	*717003★	41
4.876	4.881	.500			
123,85	*123,98*	*15,88*	*S*	455186★	45
4.876	4.881	.625			
123,85	*124,00*	*15,88*	*S*	*415186★	41
4.876	4.882	.625			
124,00	*124,20*	*13,00*	*V*	710290★⬅	32
4.882	4.890	.512			
124,72	*125,00*	*10,00*	*S*	*100X125X10★	32
4.910	4.921	.394			
124,72	*125,00*	*13,00*	*S*	*100X125X13★	32
4.910	4.921	.512			
125,00	*125,20*	*12,00*	*V*	*100X125X12V★	35
4.921	4.929	.472			
125,00	*125,28*	*12,00*	*S*	231003★	35
4.921	4.932	.472			
125,00	*125,28*	*12,00*	*S*	100X125X12★	32
4.921	4.932	.472			
126,72	*127,00*	*10,00*	*S*	*100X127X10★	32
4.989	5.000	.394			
4.999	**5.004**	**.468**	**S**	**415034**	**41**
4.999	5.004	.468	S	455034	45
4.999	5.004	.468	N	*455034N	45
4.999	5.004	.468	V	*455034V	45
4.999	5.004	.500	S	*416350	41
4.999	5.004	.500	S	*456350	45
129,70	*130,00*	*10,00*	*S*	*100X130X10★	32
5.106	5.118	.394			

Hsg. Bore	Seal O.D.	Seal Width	Lip Mat'l	Part No.	Type/ Illus.
100,00mm (3.937") SHAFT (cont.)					
129,70	*130,00*	*13,00*	*S*	*100X130X13★	32
5.106	5.118	.512			
130,00	*130,20*	*12,00*	*V*	*100X130X12V★	32
5.118	5.126	.472			
130,00	*130,28*	*12,00*	*S*	100X130X12★	32
5.118	5.129	.472			
5.251	**5.256**	**.468**	**S**	**455191**	**45**
134,70	*135,00*	*12,00*	*S*	*100X135X12★	32
5.303	5.315	.472			
134,70	*135,00*	*13,00*	*S*	*100X135X13★	32
5.303	5.315	.512			
134,70	*135,00*	*14,00*	*S*	*100X135X14★	32
5.303	5.315	.551			
135,00	*135,20*	*10,00*	*H*	710351★⬅	32
5.315	5.323	.394			
135,00	*135,20*	*15,00*	*H*	710391★⬅	94
5.315	5.323	.591			
5.371	5.377	.906	S	6270	21
5.372	5.378	1.015	S	370008A	11
5.376	**5.381**	**.500**	**S**	**415263**	**41**
5.376	5.381	.500	S	*455263	45
5.376	5.381	.500	H	*455263H	45
139,70	*140,00*	*12,00*	*S*	*100X140X12★	32
5.500	5.512	.472			
139,70	*140,00*	*13,00*	*S*	*100X140X13★	32
5.500	5.512	.512			
5.501	**5.506**	**.500**	**S**	**417506**	**41**
5.501	5.506	.562	S	*455575	45
139,73	*139,88*	*23,80*	*T*	380009A★	03
5.501	5.507	.937			
5.501	5.507	.937	S	370009A	03
145,00	*145,10*	*26,00*	*N*	710278★	#
5.709	5.713	1.024			
149,70	*150,00*	*10,00*	*S*	*100X150X10★	32
5.894	5.906	.394			
149,70	*150,00*	*13,00*	*S*	*100X150X13★	32
5.894	5.906	.512			
5.905	5.911	.500	S	*486517	48
3.950" SHAFT					
.000	4.689	.370	V	710526	32
101,00mm (3.976") SHAFT					
–	–	–	S	801000	VRS1
–	–	–	V	801004	VRS1
114,00	*114,10*	*10,00*	*S*	710371★	25
4.488	4.492	.394			
3.977" SHAFT					
–	–	–	S	801000	VRS1
–	–	–	V	801004	VRS1
5.376	5.381	.500	S	*455608	45
3.992" SHAFT					
–	–	–	S	801000	VRS1
–	–	–	V	801004	VRS1
5.875	5.881	.625	S	*417401	41
4.000" SHAFT					
–	–	–	S	801000	VRS1
–	–	–	V	801004	VRS1
–	**–**	**.500**		**99401**	**Redi-Sleeve**
–	**–**	**.600**		**99395**	**Redi-Sleeve**
–	**–**	**.650**		**99400**	**Redi-Sleeve**
–	**–**	**.813**		**99399**	**Redi-Sleeve**
4.104	4.906	.821	S	*7390%	#

For Illustration and Material Data See Technical Section

Designed For A Specific Application - Not Recommended For General Use ⬅ Hydrodynamic Lip Design-CCW % External Bore

* The U.S. customer service number is 877-4-TIMKEN. The Canadian customer service numbers are 800-565-4927 (English) and 800-565-0438 (French-Canadian). ★ Metric Seal

4.000" SHAFT (cont.)

Hsg. Bore	Seal O.D.	Seal Width	Lip Mat'l	Part No.	Type/ Illus.
4.562	4.568	.375	H	*2093H	33
4.562	4.568	.375	S	*335924	33
4.562	4.568	.375	H	*335924H	33
4.562	4.568	.375	N	335924N	33
4.625	4.634	.312	U	710036	#
4.750	4.750	.500	S	*7183%	#
4.750	4.756	.562	S	457294	45
4.750	4.760	.313	U	710031	#
4.876	4.881	.250	S	45187S	4S
4.876	**4.881**	**.625**	**S**	**415187**	**41**
4.921	4.932	.512	H	710061⬅	32
4.998	5.004	.375	N	*457382N	45
4.998	5.006	.500	S	327215	32
4.999	5.004	.375	S	475845	47
4.999	**5.004**	**.468**	**S**	**415035**	**41**
4.999	5.004	.468	N	*415035N	41
4.999	5.004	.468	V	415035V	41
4.999	5.004	.468	S	*475035	47
4.999	5.004	.468	H	*475035H	47
4.999	5.004	.468	S	*485035	48
4.999	5.004	.468	N	*485035N	48
4.999	5.004	.468	H	710022	45
4.999	5.004	.469	V	*4713V⬅➡	#
4.999	5.004	.469	V	714713⬅➡	96
4.999	5.004	.500	S	415953	41
4.999	5.004	.500	H	*415953H	41
4.999	5.004	.500	N	*415953N	41
4.999	5.004	.500	V	415953V	41
4.999	5.004	.500	S	*455953	45
4.999	5.004	.500	H	*455953H	45
4.999	5.004	.500	N	*455953N	45
4.999	5.004	.500	S	*475953	47
4.999	5.004	.500	H	*475953H	47
4.999	5.004	.500	S	*485953	48
4.999	5.004	.625	H	*75549H	7S
4.999	5.005	.468	S	455035	45
4.999	5.005	.468	N	455035N	45
4.999	5.005	.500	T	37939⬅	PDW
4.999	5.008	.312	S	345035	34
5.000	5.005	.312	N	*456967N	45
5.000	5.005	.312	V	456967V	45
5.000	5.005	.500	T	39723➡	FW-H
5.122	5.131	.378	V	*475252V	47
5.125	5.130	.312	V	*457649V	45
5.125	**5.131**	**.500**	**S**	**417356**	**41**
5.125	5.131	.500	S	*457356	45
5.125	5.131	.500	S	*477356	47
5.125	5.131	.500	S	*487356	48
5.126	5.131	.625	S	*415188	41
5.126	5.131	.625	S	455188	45
5.248	5.254	.605	S	*370087A	06
5.250	5.256	.375	N	*456946N	45
5.250	**5.256**	**.500**	**S**	**417357**	**41**
5.250	5.256	.500	S	*457357	45
5.250	5.256	.500	S	*477357	47
5.250	5.256	.500	S	*487357	48
5.250	5.256	.625	S	*8475	39
5.251	5.256	.468	S	*415192	41
5.251	5.256	.468	N	415192N	41
5.251	5.256	.468	S	455192	45
5.251	5.256	.468	S	*475192	47
5.251	5.256	.468	N	*475192N	47
5.251	5.256	.468	S	*485192	48
5.374	5.379	.500	S	*455512	45
5.375	5.381	.500	S	*476130	47
5.375	5.381	.500	S	*486130	48
5.375	5.381	1.000	S	370015A	03
5.375	5.475	.375	S	*200799%	200E
5.376	**5.381**	**.500**	**S**	**416130**	**41**
5.376	5.381	.500	S	*456130	45
5.500	5.506	.500	S	*456887	45
5.500	5.506	.562	N	*415036N	41

4.000" SHAFT (cont.)

Hsg. Bore	Seal O.D.	Seal Width	Lip Mat'l	Part No.	Type/ Illus.
5.501	**5.506**	**.562**	**S**	**415036**	**41**
5.501	5.506	.562	S	*455036	45
5.501	5.506	.562	S	*475036	47
5.501	5.506	.562	S	*485036	48
5.510	5.560	.320	S	*200947%	200E
5.626	5.631	.500	S	*415513	41
5.626	5.631	.500	S	455513	45
5.626	5.631	.500	N	*455513N	45
5.626	**5.632**	**.375**	**S**	**417507**	**41**
5.626	5.632	.605	S	370066A	06
5.689	5.695	.500	S	*456873	45
5.696	5.700	.850	S	*4269	74
5.751	**5.756**	**.562**	**S**	**415041**	**41**
5.751	5.756	.562	N	*415041N	41
5.751	5.756	.562	S	*455041	45
5.751	5.756	.562	S	*475041	47
5.751	5.756	.562	S	*485041	48
5.755	5.822	.562	S	*4235%	#
5.757	5.772	.930	S	370036A	09
5.757	5.772	.930	T	380036A	10
5.757	5.798	.600	S	370349A=	02
5.999	**6.005**	**.500**	**S**	**417509**	**41**
5.999	6.007	.625	S	*415201	41
5.999	6.007	.625	S	*455201	45
5.999	6.007	.625	S	*475201	47
5.999	6.007	.625	S	*485201	48
6.250	**6.256**	**.500**	**S**	**417223**	**41**
6.250	6.256	.562	S	*415054	41
6.250	6.256	.562	S	*455054	45
6.250	6.256	.562	S	*475054	47
6.250	6.256	.562	S	*485054	48
6.312	6.318	.500	S	*417123	41
6.312	6.318	.500	S	*477123	47
6.375	6.382	.500	S	*476816	47

102,00mm (4.016") SHAFT

–	–	–	S	801000	VRS1
–	–	–	V	801004	VRS1
125,00	*125,20*	*12,00*	*S*	*102X125X12★	32
4.921	4.929	.472			
130,00	*130,28*	*13,00*	*S*	102X130X13★	35
5.118	5.129	.512			

4.040" SHAFT

5.122	5.130	.945	S	370198A	09

4.050" SHAFT

–	–	–	S	801000	VRS1
–	–	–	V	801004	VRS1
5.501	5.506	.671	S	6864S	45

4.062" (4-1/16") SHAFT

–	–	–	S	801000	VRS1
–	–	–	V	801004	VRS1
5.035	5.197	.320	S	*8481%	46
5.372	5.378	.627	S	*9586	#
5.500	5.509	.597	S	*2155⬅➡	#
5.501	5.506	.562	S	455037	45
6.191	6.197	.625	S	*57831	5S

4.125" (4-1/8") SHAFT

–	–	–	S	801000	VRS1
–	–	–	V	801004	VRS1
–	**–**	**.813**		**99412**	**Redi-Sleeve**
4.999	5.004	.468	N	6565N	41
4.999	5.004	.468	S	*415134	41
4.999	5.004	.468	N	*415134N	41

For Illustration and Material Data See Technical Section
Designed For A Specific Application - Not Recommended For General Use ➡ Hydrodynamic Lip Design-CW ⬅ Hydrodynamic Lip Design-CCW
⬅➡ Hydrodynamic Lip Design-Bidirectional % External Bore = w/Metal ID
* The U.S. customer service number is 877-4-TIMKEN. The Canadian customer service numbers are 800-565-4927 (English) and 800-565-0438 (French-Canadian). ★ Metric Seal

4.125" (4-1/8") SHAFT (cont.)

Hsg. Bore	Seal O.D.	Seal Width	Lip Mat'l	Part No.	Type/ Illus.
4.999	5.004	.625	H	*77929H	7S
4.999	**5.005**	**.468**	**S**	**455134**	**45**
4.999	5.005	.468	H	*455134H	45
4.999	5.005	.468	N	*455134N	45
4.999	5.005	.468	V	*455134V	45
4.999	5.005	1.037	T	37921⬅	PDW
5.126	5.131	.625	S	*455393	45
5.126	**5.132**	**.500**	**S**	**417511**	**41**
5.251	5.256	.375	S	*447583	44
5.251	**5.256**	**.468**	**S**	**415142**	**41**
5.251	5.256	.468	S	*455142	45
5.375	5.381	.605	S	370094A	06
5.375	5.585	1.460	S	*8557	39
5.501	**5.506**	**.500**	**S**	**417512**	**41**
5.751	**5.756**	**.562**	**S**	**415043**	**41**
6.000	6.007	.625	S	455203	45
6.250	6.256	.562	S	455056	45
6.296	6.302	.390	S	*200198	200

105,00mm (4.134") SHAFT

Hsg. Bore	Seal O.D.	Seal Width	Lip Mat'l	Part No.	Type/ Illus.
–	–	–	S	801000	VRS1
–	–	–	V	801004	VRS1
–	**–**	**.787**		**99413**	**Redi-Sleeve**
120,00	*120,20*	*11,00*	*H*	231052★	32
4.724	4.732	.433			
124,72	*125,00*	*12,00*	*S*	*105X125X12★	32
4.910	4.921	.472			
125,00	*125,28*	*13,00*	*S*	105X125X13★	32
4.921	4.932	.512			
129,70	*130,00*	*13,00*	*S*	*105X130X13★	32
5.106	5.118	.512			
129,70	*130,00*	*15,00*	*S*	*105X130X15★	32
5.106	5.118	.591			
130,00	*130,16*	*11,00*	*T*	712107★➡	FW-H
5.118	5.124	.433			
130,00	*130,20*	*12,00*	*V*	*105X130X12V★	32
5.118	5.126	.472			
130,00	*130,25*	*12,00*	*V*	712004★⬅	32
5.118	5.128	.472			
130,00	*130,28*	*12,00*	*S*	105X130X12★	32
5.118	5.129	.472			
134,70	*135,00*	*13,00*	*S*	*105X135X13★	32
5.303	5.315	.512			
134,70	*135,00*	*14,00*	*S*	*105X135X14★	32
5.303	5.315	.551			
134,70	*135,00*	*15,00*	*S*	*105X135X15★	32
5.303	5.315	.591			
135,00	*135,20*	*12,00*	*S*	*105X135X12★	32
5.315	5.323	.472			
135,00	*135,20*	*14,50*	*V*	710349★⬅	#
5.315	5.323	.571			
139,70	*140,00*	*13,00*	*S*	*105X140X13★	32
5.500	5.512	.512			
139,70	*140,00*	*15,00*	*S*	*105X140X15★	32
5.500	5.512	.591			
140,00	*140,28*	*12,00*	*S*	105X140X12★	32
5.512	5.523	.472			
144,70	*145,00*	*15,00*	*S*	*105X145X15★	32
5.697	5.709	.591			
145,00	*145,20*	*12,00*	*S*	*105X145X12★	32
5.709	5.717	.472			
160,00	*160,20*	*15,00*	*S*	*105X160X15★	32
6.299	6.307	.591			

4.166" SHAFT

Hsg. Bore	Seal O.D.	Seal Width	Lip Mat'l	Part No.	Type/ Illus.
–	–	–	S	801100	VRS1
–	–	–	V	801104	VRS1
5.500	5.506	.605	S	370106A	06
5.501	5.506	.600	S	9128S⬅➡	45
5.502	5.506	.600	S	*2082⬅➡	45

4.166" SHAFT (cont.)

Hsg. Bore	Seal O.D.	Seal Width	Lip Mat'l	Part No.	Type/ Illus.
5.625	6.800	.210	S	2064§	#

106,00mm (4.173") SHAFT

Hsg. Bore	Seal O.D.	Seal Width	Lip Mat'l	Part No.	Type/ Illus.
–	–	–	S	801100	VRS1
–	–	–	V	801104	VRS1
123,00	*123,10*	*11,00*	*S*	710295★	47
4.843	4.846	.433			
125,72	*126,00*	*12,00*	*S*	*106X126X12★	32
4.950	4.961	.472			
126,00	*126,20*	*12,00*	*H*	710366★⬅	32
4.961	4.969	.472			
5.374	5.390	.690	T	*78048	7S

4.187" (4-3/16") SHAFT

Hsg. Bore	Seal O.D.	Seal Width	Lip Mat'l	Part No.	Type/ Illus.
–	–	–	S	801100	VRS1
–	–	–	V	801104	VRS1
–	**–**	**.813**		***99418**	**Redi-Sleeve**
4.999	5.004	.375	S	*418038	41
4.999	**5.004**	**.468**	**S**	**415295**	**41**
4.999	5.004	.468	H	*415295H	41
4.999	5.004	.468	S	*455295	45
5.125	5.131	.500	V	*455081V	45
5.250	5.256	.468	H	*485194H	48
5.251	**5.256**	**.468**	**S**	**455194**	**45**
5.500	5.506	.500	S	*456889	45
5.501	5.506	.500	S	417513	41
5.501	5.506	.562	S	*415039	41
5.501	5.506	.562	N	*415039N	41
5.501	5.506	.562	S	*455039	45
5.751	**5.756**	**.500**	**S**	**417514**	**41**
5.751	5.756	.562	S	*415044	41
5.751	5.756	.562	S	*455044	45
5.999	6.007	.625	S	*455204	45
6.000	6.007	.500	S	417515	41
6.000	6.007	.625	S	*416673	41
6.000	6.007	.625	N	*416673N	41
6.250	6.256	.500	S	417516	41
6.250	6.256	.500	V	*417516V	41
6.250	6.256	.562	S	*455057	45
6.373	6.381	.625	S	*455625	45

4.250" (4-1/4") SHAFT

Hsg. Bore	Seal O.D.	Seal Width	Lip Mat'l	Part No.	Type/ Illus.
–	–	–	S	801100	VRS1
–	–	–	V	801104	VRS1
–	**–**	**.813**		**99424**	**Redi-Sleeve**
5.125	5.130	.360	S	*3369	#
5.250	5.253	.790	S	*77980	7S
5.250	5.256	.250	S	47150S	4S
5.250	5.256	.500	S	416556	41
5.250	5.256	.500	S	*456556	45
5.250	5.256	.500	S	*476556	47
5.250	5.256	.500	S	*486556	48
5.250	5.260	.590	S	*7234	#
5.251	5.256	.375	S	*452157	45
5.251	**5.256**	**.375**	**S**	**472157**	**47**
5.251	5.256	.375	N	*482157N	48
5.251	5.256	.468	S	*415195	41
5.251	5.256	.468	N	*415195N	41
5.251	5.256	.468	S	455195	45
5.251	5.256	.468	H	*455195H	45
5.251	5.256	.468	V	*455195V	45
5.251	5.256	.468	S	*475195	47
5.251	5.256	.468	N	*475195N	47
5.251	5.256	.468	S	*485195	48
5.251	5.256	.468	H	485195H	48
5.251	5.256	.625	S	*415712	41
5.251	5.256	.625	S	*455712	45
5.251	5.256	.625	N	*455712N	45

For Illustration and Material Data See Technical Section
Designed For A Specific Application - Not Recommended For General Use ➡ Hydrodynamic Lip Design-CW ⬅ Hydrodynamic Lip Design-CCW
⬅➡ Hydrodynamic Lip Design-Bidirectional § Inside Diameter-Rides On Ball
* The U.S. customer service number is 877-4-TIMKEN. The Canadian customer service numbers are 800-565-4927 (English) and 800-565-0438 (French-Canadian). ★ Metric Seal

4.250" (4-1/4") SHAFT (cont.)

Hsg. Bore	Seal O.D.	Seal Width	Lip Mat'l	Part No.	Type/ Illus.
5.375	5.381	.500	S	*475196	47
5.376	**5.381**	**.500**	**S**	**415196**	**41**
5.376	5.381	.500	H	*415196H	41
5.376	5.381	.500	N	*415196N	41
5.376	5.381	.500	S	*455196	45
5.376	5.381	.500	N	*455196N	45
5.376	5.381	.500	S	*485196	48
5.500	**5.506**	**.500**	**S**	**416891**	**41**
5.500	5.506	.500	S	*456891	45
5.500	5.506	.500	S	*476891	47
5.500	5.506	.500	S	*486891	48
5.501	5.506	.562	S	*415040	41
5.501	5.506	.562	N	*415040N	41
5.501	5.506	.562	S	*455040	45
5.501	5.506	.562	H	*455040H	45
5.501	5.506	.562	N	*455040N	45
5.501	5.506	.562	S	*475040	47
5.501	5.506	.562	S	*485040	48
5.625	5.631	.500	S	*476135	47
5.625	5.631	.500	S	*486135	48
5.626	**5.631**	**.500**	**S**	**416135**	**41**
5.626	5.631	.500	S	*456135	45
5.751	**5.756**	**.562**	**S**	**415045**	**41**
5.751	5.756	.562	S	*455045	45
5.751	5.756	.562	S	*475045	47
5.751	5.756	.562	S	*485045	48
5.876	5.881	.500	V	*457661V	45
5.876	5.881	.625	S	*416136	41
5.876	5.881	.625	N	*416136N	41
5.876	5.881	.625	N	*456136N	45
5.876	5.881	.625	V	*456136V	45
5.999	**6.005**	**.500**	**S**	**416137**	**41**
5.999	6.007	.625	S	*415205	41
5.999	6.007	.625	S	*455205	45
5.999	6.007	.625	N	*455205N	45
5.999	6.007	.625	S	*475205	47
5.999	6.007	.625	S	*485205	48
6.000	6.008	1.000	T	380065A	10
6.008	6.022	1.000	S	370065A	09
6.035	6.047	.915	S	370107A	03
6.048	6.048	.680	S	376590A=	04
6.126	**6.133**	**.500**	**S**	**417518**	**41**
6.127	6.132	.625	S	*455473	45
6.250	**6.256**	**.562**	**S**	**415058**	**41**
6.250	6.256	.562	S	*455058	45
6.250	6.256	.562	S	*475058	47
6.250	6.256	.562	S	*485058	48
6.250	6.256	1.188	S	370031A	09
6.250	6.256	1.188	T	380031A	10
6.750	6.757	.625	S	*417452	41

108,00mm (4.252") SHAFT

–	–	–	S	801100	VRS1
–	–	–	V	801104	VRS1
–	**–**	**.813**		**99424**	**Redi-Sleeve**
153,62	*153,62*	*17,27*	*T*	386590A★	10
6.007	6.048	.580			

4.265" SHAFT

6.064	6.071	.605	S	370030A	06

4.312" (4-5/16") SHAFT

–	–	–	S	801100	VRS1
–	–	–	V	801104	VRS1
5.376	**5.381**	**.500**	**S**	**456141**	**45**
5.501	5.506	.562	S	455197	45
5.501	5.506	.562	N	455197N	45
5.501	5.506	.562	H	*485197H	48
5.751	**5.756**	**.500**	**S**	**417520**	**41**

4.312" (4-5/16") SHAFT (cont.)

5.751	5.756	.562	S	*455046	45
5.999	6.005	.500	S	416144	41
5.999	6.007	.625	S	*455206	45
6.250	**6.256**	**.500**	**S**	**417238**	**41**
6.250	6.256	.562	S	*455059	45
6.250	6.256	.562	N	*455059N	45

4.330" SHAFT

5.118	5.130	.396	V	325776	32

110,00mm (4.331") SHAFT

–	–	–	S	801100	VRS1
–	–	–	V	801104	VRS1
–	**–**	**.509**		**99435**	**Redi-Sleeve**
124,72	*125,00*	*12,00*	*S*	*110X125X12★	32
4.910	4.921	.472			
129,70	*130,00*	*13,00*	*S*	*110X130X13★	32
5.106	5.118	.512			
130,00	*130,18*	*12,70*	*V*	2261★⬅	32
5.118	5.125	.500			
130,00	*130,20*	*12,00*	*V*	*110X130X12V★	32
5.118	5.126	.472			
130,00	*130,28*	*12,00*	*S*	110X130X12★	32
5.118	5.129	.472			
130,00	*130,40*	*13,00*	*T*	712112★⬅	W
5.118	5.134	.512			
135,00	*135,20*	*12,00*	*S*	*110X135X12★	32
5.315	5.323	.472			
135,00	*135,30*	*13,00*	*S*	110X135X13★	32
5.315	5.327	.512			
139,70	*140,00*	*14,00*	*S*	*110X140X14★	32
5.500	5.512	.551			
140,00	*140,23*	*13,00*	*S*	110X140X13★	32
5.512	5.521	.512			
140,00	*140,28*	*12,00*	*S*	110X140X12★	32
5.512	5.523	.472			
140,00	*140,28*	*12,00*	*V*	*110X140X12V★	32
5.512	5.523	.472			
144,70	*145,00*	*14,00*	*S*	*110X145X14★	32
5.697	5.709	.551			
145,00	*145,20*	*12,00*	*S*	*110X145X12★	32
5.709	5.717	.472			
145,00	*145,30*	*13,00*	*S*	110X145X13★	35
5.709	5.720	.512			
149,70	*150,00*	*13,00*	*S*	*110X150X13★	32
5.894	5.906	.512			
150,00	*150,28*	*15,00*	*S*	110X150X15★	35
5.906	5.917	.591			
155,00	*155,20*	*15,00*	*S*	*110X155X15★	32
6.102	6.110	.591			
159,70	*160,00*	*12,00*	*S*	*110X160X12★	32
6.287	6.299	.472			
160,00	*160,20*	*15,00*	*S*	*110X160X15★	32
6.299	6.307	.591			
166,70	*167,00*	*17,00*	*S*	*110X167X17★	32
6.563	6.575	.669			
169,70	*170,00*	*12,00*	*S*	*110X170X12★	32
6.681	6.693	.472			
170,00	*170,18*	*12,70*	*S*	476518★	47
6.693	6.700	.500			

4.375" (4-3/8") SHAFT

–	3.127	.500	S	*55522	5S
5.373	5.500	.570	N	7354N%	8S
5.373	5.500	.570	V	7354V%	8S
5.375	–	.500	S	*4291	#
5.375	5.425	.500	V	4291V%	#
5.376	5.381	.500	S	415425	41
5.376	5.381	.500	V	*415425V	41

For Illustration and Material Data See Technical Section

Designed For A Specific Application - Not Recommended For General Use ⬅ Hydrodynamic Lip Design-CCW % External Bore = w/Metal ID

* The U.S. customer service number is 877-4-TIMKEN. The Canadian customer service numbers are 800-565-4927 (English) and 800-565-0438 (French-Canadian). ★ Metric Seal

Hsg. Bore	Seal O.D.	Seal Width	Lip Mat'l	Part No.	Type/ Illus.
4.375" (4-3/8") SHAFT (cont.)					
5.500	**5.506**	**.500**	**S**	**416380**	**41**
5.500	5.506	.500	S	∗456380	45
5.500	5.506	.500	S	∗476380	47
5.500	5.506	.500	S	∗486380	48
5.501	5.506	.500	T	39849➡	FW-H
5.501	5.506	.562	S	∗3203	47
5.501	5.506	.562	S	∗415198	41
5.501	5.506	.562	H	∗415198H	41
5.501	5.506	.562	S	455198	45
5.501	5.506	.562	N	∗455198N	45
5.501	5.506	.562	S	∗475198	47
5.501	5.506	.562	S	∗485198	48
5.626	5.631	.500	S	416147	41
5.751	**5.756**	**.562**	**S**	**415047**	**41**
5.751	5.756	.562	S	∗455047	45
5.751	5.756	.562	S	∗475047	47
5.751	5.756	.562	S	∗485047	48
5.755	5.705	.840	T	∗100253&	#
5.757	5.763	1.000	S	370037A	03
5.757	5.798	.600	S	370338A=	02
5.905	5.910	1.000	S	370182A	08
5.905	5.911	1.000	S	370048A	03
5.905	5.918	1.015	T	380048A	10
5.999	**6.005**	**.500**	**S**	**416149**	**41**
5.999	6.007	.500	N	∗476149N	47
5.999	6.007	.625	S	∗415207	41
5.999	6.007	.625	S	∗455207	45
5.999	6.007	.625	S	∗475207	47
5.999	6.007	.625	S	∗485207	48
6.064	6.071	.625	S	∗455861	45
6.064	6.071	.625	S	6635S	45
6.125	6.131	.500	S	417522	41
6.125	6.131	.500	V	∗417522V	41
6.125	6.131	.562	S	∗456150	45
6.127	6.132	.625	S	∗415573	41
6.250	6.256	.562	L	∗55060	5L
6.250	6.256	.562	S	∗55060S	5S
6.250	6.256	.562	S	415060	41
6.250	6.256	.562	S	455060	45
6.250	6.256	.562	S	∗475060	47
6.250	6.256	.562	S	∗485060	48
6.251	6.256	.605	S	370019A	06
6.311	6.317	1.090	S	370034A	03
112,00mm (4.409") SHAFT					
–	–	–	S	801100	VRS1
–	–	–	V	801104	VRS1
135,00	*135,20*	*15,00*	*S*	∗112X135X15★	32
5.315	5.323	.591			
140,00	*140,32*	*13,00*	*S*	112X140X13★	35
5.512	5.524	.512			
141,70	*142,00*	*14,00*	*S*	∗112X142X14★	32
5.579	5.591	.551			
145,00	*145,20*	*15,00*	*S*	∗112X145X15★	32
5.709	5.717	.591			
150,00	*150,20*	*15,00*	*S*	∗112X150X15★	32
5.906	5.913	.591			
4.437" (4-7/16") SHAFT					
–	–	–	S	801100	VRS1
–	–	–	V	801104	VRS1
–	**–**	**1.000**		**∗99439**	**Redi-Sleeve**
5.500	5.506	.500	S	417295	41
5.500	**5.506**	**.562**	**S**	**457295**	**25**
5.751	**5.756**	**.500**	**S**	**417525**	**41**
5.999	6.007	.500	S	417526	41
114,00mm (4.488") SHAFT					
–	–	–	S	801100	VRS1
–	–	–	V	801104	VRS1
135,00	*135,25*	*13,00*	*S*	713163★⬅	47
5.315	5.325	.512			
140,00	*140,28*	*13,00*	*S*	114X140X13★	32
5.512	5.523	.512			
4.500" (4-1/2") SHAFT					
5.250	5.256	.437	S	∗335821	33
5.250	5.256	.437	H	∗335821H	33
5.251	**5.259**	**.437**	**S**	**327303**	**32**
5.374	5.391	.984	S	370124A	07
5.375	5.381	.531	S	∗456494	45
5.376	**5.381**	**.437**	**S**	**417530**	**41**
5.500	**5.506**	**.500**	**S**	**416888**	**41**
5.500	5.506	.500	S	∗456888	45
5.500	5.506	.500	N	∗456888N	45
5.500	5.506	.500	V	∗456888V	45
5.500	5.506	.500	S	∗476888	47
5.500	5.506	.500	V	∗476888V	47
5.500	5.506	.500	S	∗486888	48
5.500	5.506	.500	H	∗486888H	48
5.500	5.506	.562	S	455200	45
5.500	5.506	.562	N	455200N	45
5.500	5.506	.562	V	∗455200V	45
5.500	5.507	.500	V	416888V	41
5.500	5.515	.675	S	370178A	07
5.501	5.506	.500	N	∗456030N	45
5.501	5.506	.562	S	∗3275	47
5.501	5.506	.562	F	∗295200	29
5.501	5.506	.562	S	∗415200	41
5.501	5.506	.562	N	∗415200N	41
5.501	5.506	.562	V	∗415200V	41
5.501	5.506	.562	S	∗475200	47
5.501	5.506	.562	S	∗485200	48
5.501	5.507	.380	S	∗477439	47
5.501	5.511	.500	S	355200	35
5.512	5.518	.562	S	∗455943	45
5.625	**5.631**	**.500**	**S**	**416153**	**41**
5.625	5.631	.500	V	∗416153V	41
5.625	5.631	.500	S	456153	45
5.625	5.631	.500	S	∗476153	47
5.625	5.631	.500	S	∗486153	48
5.750	**5.756**	**.500**	**S**	**416892**	**41**
5.750	5.756	.500	S	∗456892	45
5.750	5.756	.500	S	∗476892	47
5.750	5.756	.500	S	∗486892	48
5.750	5.756	.562	S	∗455049	45
5.750	5.756	.960	S	370022A	09
5.750	5.756	.960	T	380022A	10
5.751	5.756	.562	S	∗415049	41
5.751	5.756	.562	S	∗475049	47
5.751	5.756	.562	S	∗485049	48
5.751	5.870	.250	S	∗7042S%	#
5.876	5.881	.500	S	417531	41
5.876	5.881	.625	S	∗415342	41
5.876	5.881	.625	S	∗455342	45
5.876	5.892	.984	S	370131A	11
5.876	5.892	.984	T	380131A	10
5.999	**6.007**	**.500**	**S**	**416154**	**41**
5.999	6.007	.500	S	∗476154	47
5.999	6.007	.625	S	∗415209	41
5.999	6.007	.625	N	∗415209N	41
5.999	6.007	.625	S	∗475209	47
5.999	6.007	.625	S	∗485209	48
6.000	6.007	.984	S	370020A	03
6.001	6.007	.500	S	∗456800	45
6.001	6.007	.625	S	∗455209	45
6.125	**6.131**	**.562**	**S**	**416070**	**41**
6.127	6.132	.562	S	∗455601	45
6.250	**6.256**	**.500**	**S**	**415351**	**41**
6.250	6.256	.500	S	∗455351	45

SIZE SECTION

For Illustration and Material Data See Technical Section
Designed For A Specific Application - Not Recommended For General Use ➡ Hydrodynamic Lip Design-CW ⬅ Hydrodynamic Lip Design-CCW % External Bore
& Flanged O.D. = w/Metal ID
∗ The U.S. customer service number is 877-4-TIMKEN. The Canadian customer service numbers are 800-565-4927 (English) and 800-565-0438 (French-Canadian). ★ Metric Seal

4.500" (4-1/2") SHAFT (cont.)

Hsg. Bore	Seal O.D.	Seal Width	Lip Mat'l	Part No.	Type/ Illus.
6.250	6.256	.562	S	*415062	41
6.250	6.256	.562	H	*415062H	41
6.250	6.256	.562	S	455062	45
6.250	6.256	.562	N	*455062N	45
6.250	6.256	.562	S	*475062	47
6.250	6.256	.562	S	*485062	48
6.250	6.257	.820	S	*9587&	#
6.251	6.265	.610	S	370021A	09
6.305	6.313	.954	S	*2704	#
6.307	**6.313**	**1.141**	**S**	***9907**	**Redi-Sleeve**
6.310	6.316	1.175	S	370086A	03
6.374	**6.382**	**.500**	**S**	**417532**	**41**
6.374	6.382	.625	S	*455325	45
6.441	6.447	.937	S	370192A	03
6.622	6.629	1.093	S	370078A	03

115,00mm (4.528") SHAFT

Hsg. Bore	Seal O.D.	Seal Width	Lip Mat'l	Part No.	Type/ Illus.
–	–	–	S	801100	VRS1
–	–	–	V	801104	VRS1
–	**–**	**.813**		**99452**	**Redi-Sleeve**
135,00	*135,20*	*10,00*	*V*	710258★⬅	32
5.315	5.323	.394			
135,00	*135,20*	*15,00*	*S*	*115X135X15★	32
5.315	5.323	.591			
139,70	*140,00*	*13,00*	*S*	*115X140X13★	32
5.500	5.512	.512			
139,70	*140,00*	*14,00*	*S*	*115X140X14★	32
5.500	5.512	.551			
140,00	*140,20*	*12,00*	*V*	*115X140X12V★	35
5.512	5.520	.472			
140,00	*140,28*	*12,00*	*S*	115X140X12★	32
5.512	5.523	.472			
144,70	*145,00*	*16,00*	*S*	*115X145X16★	32
5.697	5.709	.630			
145,00	*145,20*	*14,00*	*S*	115X145X14★⬅➡	32
5.709	5.717	.551			
145,00	*145,20*	*15,00*	*S*	*115X145X15★	32
5.709	5.717	.591			
145,00	*145,30*	*13,00*	*S*	115X145X13★	35
5.709	5.720	.512			
146,20	*146,50*	*13,00*	*S*	*115X146.5X13★	32
5.756	5.768	.512			
149,70	*150,00*	*15,00*	*S*	*115X150X15★	32
5.894	5.906	.591			
150,00	*150,28*	*12,00*	*S*	115X150X12★	35
5.906	5.917	.472			
155,00	*155,20*	*15,00*	*S*	*115X155X15★	32
6.102	6.110	.591			
156,00	*156,10*	*28,00*	*S*	710372★	#
6.142	6.146	1.102			
158,70	*159,00*	*14,00*	*S*	*115X159X14★	32
6.248	6.260	.551			
160,00	*160,20*	*15,00*	*S*	*115X160X15★	32
6.299	6.307	.591			

4.550" SHAFT

Hsg. Bore	Seal O.D.	Seal Width	Lip Mat'l	Part No.	Type/ Illus.
5.500	5.570	.350	S	*200856%	200
5.500	5.662	.350	S	*8482	#

4.562" (4-9/16") SHAFT

Hsg. Bore	Seal O.D.	Seal Width	Lip Mat'l	Part No.	Type/ Illus.
5.312	5.317	.250	S	*447722	44
5.512	5.517	.250	S	*447717	44
5.751	**5.756**	**.500**	**S**	**417533**	**41**
5.999	6.007	.500	S	417534	41
6.250	6.256	.500	S	457585	45

116,00mm (4.567") SHAFT

Hsg. Bore	Seal O.D.	Seal Width	Lip Mat'l	Part No.	Type/ Illus.
131,70	*132,00*	*12,00*	*S*	*116X132X12★	32
5.185	5.197	.472			

116,50mm (4.587") SHAFT

Hsg. Bore	Seal O.D.	Seal Width	Lip Mat'l	Part No.	Type/ Illus.
135,00	*135,30*	*13,00*	*V*	*355590V★⬅➡	35
5.315	5.327	.512			

4.625" (4-5/8") SHAFT

Hsg. Bore	Seal O.D.	Seal Width	Lip Mat'l	Part No.	Type/ Illus.
–	**–**	**.438**		***99465**	**Redi-Sleeve**
–	**–**	**1.000**		**99463**	**Redi-Sleeve**
.000	5.998	.580	T	386025A	10
5.500	5.506	.562	H	456641	45
5.501	5.506	.655	H	*77558H	7S
5.625	**5.631**	**.500**	**S**	**416156**	**41**
5.751	5.756	.500	S	*415634	41
5.751	**5.756**	**.562**	**S**	**415371**	**41**
5.751	5.756	.562	N	*415371N	41
5.751	5.756	.562	S	*455371	45
5.751	5.756	.562	N	*455371N	45
5.751	5.756	.562	S	*475371	47
5.751	5.756	.562	S	*485371	48
5.875	5.881	.625	S	455685	45
5.875	5.881	.625	N	*455685N	45
5.999	6.005	.937	T	380025A	10
5.999	6.006	.890	S	370216A	11
5.999	**6.007**	**.500**	**S**	**416158**	**41**
5.999	6.007	.500	S	*476158	47
5.999	6.007	.625	S	*455211	45
5.999	6.007	.625	S	*475211	47
5.999	6.007	.625	S	*485211	48
5.999	6.008	.840	S	370025A	11
6.000	7.125	.987	H	*8548H	#
6.001	6.007	.625	S	*415211	41
6.125	6.131	.562	S	*415970	41
6.125	6.131	.562	H	*415970H	41
6.186	6.192	1.250	V	*2505V	89
6.186	6.192	1.250	S	2505	89
6.250	6.256	.500	S	*417246	41
6.250	6.256	.562	S	415064	41
6.250	6.256	.562	S	*455064	45
6.250	6.256	.562	S	*475064	47
6.250	6.256	.562	S	*485064	48
6.250	6.257	.550	S	*9588&	#
6.622	6.629	1.093	S	6886S	21
6.622	6.629	1.093	S	7700S	21
6.622	6.629	1.093	S	370051A	03

4.635" SHAFT

Hsg. Bore	Seal O.D.	Seal Width	Lip Mat'l	Part No.	Type/ Illus.
6.007	6.014	.937	S	370026A	03

118,00mm (4.646") SHAFT

Hsg. Bore	Seal O.D.	Seal Width	Lip Mat'l	Part No.	Type/ Illus.
5.751	5.756	.500	T	39952⬅	FW-H
173,00	*173,80*	*28,00*	*S*	710089★	#
6.811	6.843	1.102			

4.647" SHAFT

Hsg. Bore	Seal O.D.	Seal Width	Lip Mat'l	Part No.	Type/ Illus.
6.309	6.318	.625	S	*4591	#

4.687" (4-11/16") SHAFT

Hsg. Bore	Seal O.D.	Seal Width	Lip Mat'l	Part No.	Type/ Illus.
–	**–**	**.812**		**99468**	**Redi-Sleeve**
5.750	5.762	.565	V	*325378⬅➡	32
5.751	**5.756**	**.500**	**S**	**415284**	**41**
5.751	5.756	.562	S	*455378	45
5.751	5.756	.562	H	455378H	45
5.751	5.756	.562	N	*455378N	45

For Illustration and Material Data See Technical Section
Designed For A Specific Application - Not Recommended For General Use ⬅ Hydrodynamic Lip Design-CCW ⬅➡ Hydrodynamic Lip Design-Bidirectional % External Bore & Flanged O.D. * The U.S. customer service number is 877-4-TIMKEN. The Canadian customer service numbers are 800-565-4927 (English) and 800-565-0438 (French-Canadian).
★ Metric Seal

Hsg. Bore	Seal O.D.	Seal Width	Lip Mat'l	Part No.	Type/ Illus.
4.687" (4-11/16") SHAFT (cont.)					
5.751	5.756	.750	S	6329S	7S
5.999	6.007	.500	S	417535	41
6.001	6.007	.280	S	*487806	48
6.002	6.007	.250	S	45637S	4S
6.250	6.256	.500	S	417536	41
6.374	6.382	.500	S	417537	41
6.500	6.514	.500	T	*325277T➡	32
6.500	6.514	.500	T	*325277TL⬅	32
6.850	6.865	.551	S	*4610	35
4.720" SHAFT					
–	**–**	**.787**		**99473**	**Redi-Sleeve**
6.312	6.318	.473	S	*457734	45
120,00mm (4.724") SHAFT					
–	**–**	**.787**		**99473**	**Redi-Sleeve**
139,70	*140,00*	*12,00*	*S*	*120X140X12★	32
5.500	5.512	.472			
139,70	*140,00*	*15,00*	*S*	*120X140X15★	32
5.500	5.512	.591			
140,00	*140,21*	*10,50*	*S*	710084★	47
5.512	5.520	.413			
140,00	*140,20*	*13,00*	*T*	712106★	32
5.512	5.520	.512			
140,00	*140,25*	*12,00*	*S*	717004★	48
5.512	5.522	.472			
140,00	*140,28*	*13,00*	*S*	120X140X13★	32
5.512	5.523	.512			
140,00	*140,30*	*13,00*	*V*	712003★⬅	32
5.512	5.524	.512			
145,00	*145,28*	*12,00*	*S*	120X145X12★	35
5.709	5.720	.472			
145,00	*145,28*	*12,00*	*S*	231204★	35
5.709	5.720	.472			
145,70	*146,00*	*13,00*	*S*	*120X146X13★	32
5.736	5.748	.512			
146,20	*146,50*	*13,00*	*S*	*120X146.5X13★	32
5.756	5.768	.512			
149,70	*150,00*	*13,00*	*S*	*120X150X13★	32
5.894	5.906	.512			
149,70	*150,00*	*14,00*	*S*	*120X150X14★	32
5.894	5.906	.551			
149,70	*150,00*	*15,00*	*S*	*120X150X15★	32
5.894	5.906	.591			
150,01	*150,16*	*14,99*	*S*	370220A★	11
5.906	5.912	.590			
150,00	*150,20*	*12,00*	*V*	*120X150X12V★	32
5.906	5.913	.472			
150,00	*150,28*	*12,00*	*S*	120X150X12★	32
5.906	5.917	.472			
154,70	*155,00*	*14,00*	*S*	*120X155X14★	32
6.090	6.102	.551			
154,70	*155,00*	*16,00*	*S*	*120X155X16★	32
6.090	6.102	.630			
155,00	*155,20*	*15,00*	*S*	*120X155X15★	32
6.102	6.110	.591			
158,70	*159,00*	*14,00*	*S*	*120X159X14★	32
6.248	6.260	.551			
159,70	*160,00*	*15,00*	*S*	*120X160X15★	32
6.287	6.299	.591			
160,00	*160,20*	*12,00*	*V*	*120X160X12V★	35
6.299	6.307	.472			
160,00	*160,28*	*12,00*	*S*	120X160X12★	32
6.299	6.310	.472			
179,67	*180,00*	*15,00*	*S*	*120X180X15★	32
7.074	7.087	.591			

Hsg. Bore	Seal O.D.	Seal Width	Lip Mat'l	Part No.	Type/ Illus.
4.740" SHAFT					
–	7.575	.410	S	*6701	#
–	7.625	.410	S	*6701SS0	#
4.750" (4-3/4") SHAFT					
–	**–**	**.500**		**99475**	**Redi-Sleeve**
5.375	–	.312	U	*710037	#
5.750	**5.756**	**.500**	**S**	**415138**	**41**
5.750	5.756	.500	H	*415138H	41
5.750	5.756	.500	N	*415138N	41
5.750	5.756	.500	S	*455138	45
5.750	5.756	.500	N	*455138N	45
5.750	5.756	.500	S	*475138	47
5.750	5.756	.500	H	*475138H	47
5.750	5.756	.500	S	*485138	48
5.750	5.757	.562	V	*455053V	45
5.751	5.756	.500	V	*485138V	48
5.751	5.756	.500	V	714750	48
5.751	5.756	.562	S	*415053	41
5.751	5.756	.562	H	*415053H	41
5.751	5.756	.562	N	*415053N	41
5.751	5.756	.562	V	*415053V	41
5.751	5.756	.562	S	*475053	47
5.751	5.756	.562	S	*485053	48
5.751	5.757	.562	S	*455053	45
5.751	5.757	.562	H	*455053H	45
5.751	5.757	.562	N	*455053N	45
5.876	**5.881**	**.500**	**S**	**417538**	**41**
5.876	5.881	.500	V	*417538V	41
5.876	5.881	.625	S	*455233	45
5.999	6.006	.562	H	*416122H	41
5.999	6.006	.562	H	*476122H	47
5.999	6.007	.625	S	*415213	41
5.999	6.007	.625	N	415213N	41
5.999	6.007	.625	S	*455213	45
5.999	6.007	.625	S	*475213	47
5.999	6.007	.625	S	*485213	48
6.000	6.006	.500	V	*487250V	48
6.000	6.006	.562	T	39732⬅	W-H
6.000	6.006	.562	T	39825⬅	FW-H
6.000	6.006	.562	T	39827⬅	DW-H
6.001	6.007	.500	N	*457247N	45
6.001	**6.007**	**.500**	**S**	**417247**	**41**
6.001	6.007	.500	S	*457247	45
6.001	6.007	.500	S	*477247	47
6.001	6.007	.500	S	*487247	48
6.002	6.092	.285	S	200642%	200
6.125	**6.131**	**.500**	**S**	**417252**	**41**
6.125	6.131	.562	S	*456160	45
6.127	6.132	.625	S	*455258	45
6.186	6.192	1.250	S	3100	89
6.250	6.256	.500	S	*416866	41
6.250	**6.256**	**.562**	**S**	**415066**	**41**
6.250	6.256	.562	S	*455066	45
6.250	6.256	.562	S	*475066	47
6.250	6.256	.562	S	*485066	48
6.437	6.457	.359	S	*200875%	200E
6.618	6.625	1.141	S	6663S	89
6.619	6.625	1.150	S	*4139	#
6.625	6.632	.625	S	*455375	45
4.759" SHAFT					
6.280	6.334	.312	S	*9572%	#
4.765" SHAFT					
5.999	6.006	1.031	S	370181A	01
6.250	6.257	1.050	S	370173A	01
6.251	6.265	.605	S	370005A	09
6.311	6.318	1.078	S	370003A	11
6.311	6.318	1.132	T	380003A	10

For Illustration and Material Data See Technical Section
Designed For A Specific Application - Not Recommended For General Use ➡ Hydrodynamic Lip Design-CW ⬅ Hydrodynamic Lip Design-CCW % External Bore
* The U.S. customer service number is 877-4-TIMKEN. The Canadian customer service numbers are 800-565-4927 (English) and 800-565-0438 (French-Canadian). ★ Metric Seal

Hsg. Bore	Seal O.D.	Seal Width	Lip Mat'l	Part No.	Type/ Illus.
4.765" SHAFT (cont.)					
6.999	7.006	1.250	S	370006A	03
4.768" SHAFT					
6.999	7.039	.735	S	* 370224A	02
122,00mm (4.803") SHAFT					
139,70	*140,00*	*13,00*	*S*	* 122X140X13★	32
5.500	5.512	.512			
4.812" (4-13/16") SHAFT					
5.543	5.551	.472	V	712449⬅	32
5.544	5.552	.535	H	3341⬅	100
5.750	5.762	.580	T	* 327934⬅➡	32
5.751	5.756	.562	S	* 455251	45
5.751	5.756	.562	H	455251H	45
5.751	5.756	.562	N	* 455251N	45
5.751	5.756	.750	S	75251S	7S
5.751	5.757	.512	S	* 78021➡	7S
5.751	5.757	.812	S	* 78021T⬅	7S
5.999	6.007	.500	S	416163	41
5.999	6.007	.500	S	* 476163	47
5.999	6.007	.625	S	* 455214	45
6.000	6.010	.250	S	* 345214	34
6.000	6.010	.250	H	* 345214H	34
6.250	6.256	.500	S	456890	45
6.250	6.256	.562	S	* 455067	45
6.311	6.316	1.062	S	370027A	03
6.499	6.507	.625	S	* 455614	45
6.500	6.507	.865	S	370004A	03
4.835" SHAFT					
5.749	5.756	.375	T	39954⬅	DW-H
4.875" (4-7/8") SHAFT					
5.750	5.756	.500	V	* 487063V	48
5.999	**6.007**	**.500**	**S**	**416167**	**41**
5.999	6.007	.500	N	* 416167N	41
5.999	6.007	.500	S	* 456167	45
5.999	6.007	.500	S	* 486167	48
5.999	6.007	.500	H	* 486167H	48
5.999	6.007	.625	S	* 415091	41
5.999	6.007	.625	S	455091	45
5.999	6.007	.625	H	* 455091H	45
5.999	6.007	.625	S	* 475091	47
5.999	6.007	.625	S	* 485091	48
6.000	6.006	.562	S	* 416621	41
6.000	6.006	.562	N	* 416621N	41
6.000	6.006	.562	V	* 456621V	45
6.000	6.006	.562	H	* 476621H	47
6.001	6.015	.625	S	370195A	07
6.125	6.131	.500	S	417267	41
6.125	6.131	.562	S	* 456168	45
6.127	6.132	.625	S	* 455217	45
6.250	**6.256**	**.500**	**S**	**417269**	**41**
6.250	6.256	.562	S	* 415068	41
6.250	6.256	.562	N	* 415068N	41
6.250	6.256	.562	S	455068	45
6.250	6.256	.562	N	* 455068N	45
6.250	6.256	.562	S	* 475068	47
6.250	6.256	.562	S	* 485068	48
6.250	6.256	.812	S	* 395068	#
6.373	6.379	.921	S	370007A	03
6.375	6.625	.500	S	7866S	75
6.437	6.444	.921	S	370057A	03
6.500	6.506	1.000	S	370121A	03
6.622	6.629	1.000	S	370109A	03

Hsg. Bore	Seal O.D.	Seal Width	Lip Mat'l	Part No.	Type/ Illus.
124,00mm (4.882") SHAFT					
146,00	*146,10*	*14,00*	*S*	710405★	47
5.748	5.752	.551			
158,70	*159,00*	*14,00*	*S*	* 124X159X14★	32
6.248	6.260	.551			
169,70	*170,00*	*14,50*	*S*	* 124X170X14.5★	32
6.681	6.693	.571			
170,00	–	*14,50*	*S*	710381★%	#
6.693	–	.571			
125,00mm (4.921") SHAFT					
–	–	–	S	801300	VRS1
–	–	–	V	801304	VRS1
–	**–**	**.394**		*** 99490**	**Redi-Sleeve**
–	**–**	**1.024**		**99492**	**Redi-Sleeve**
140,00	*140,18*	*7,00*	*S*	* 315286★	31
5.512	5.519	.276			
144,70	*145,00*	*13,00*	*S*	* 125X145X13★	32
5.697	5.709	.512			
146,20	*146,50*	*13,00*	*S*	* 125X146.5X13★	32
5.756	5.768	.512			
149,70	*150,00*	*13,00*	*S*	* 125X150X13★	32
5.894	5.906	.512			
149,70	*150,00*	*14,00*	*S*	* 125X150X14★	32
5.894	5.906	.551			
149,70	*150,00*	*15,00*	*S*	* 125X150X15★	32
5.894	5.906	.591			
150,00	*150,20*	*12,00*	*V*	* 125X150X12V★	32
5.906	5.913	.472			
150,00	*150,28*	*12,00*	*S*	125X150X12★	32
5.906	5.917	.472			
150,00	*150,28*	*12,00*	*S*	231250★	35
5.906	5.917	.472			
154,70	*155,00*	*14,00*	*S*	* 125X155X14★	32
6.090	6.102	.551			
155,00	*155,20*	*12,00*	*S*	125X155X12★	32
6.102	6.110	.472			
155,00	*155,20*	*15,00*	*S*	* 125X155X15★	32
6.102	6.110	.591			
159,70	*160,00*	*15,00*	*S*	* 125X160X15★	32
6.287	6.299	.591			
160,00	*160,28*	*12,00*	*S*	125X160X12★	32
6.299	6.310	.472			
170,00	*170,20*	*15,00*	*S*	125X170X15★	32
6.693	6.701	.591			
4.937" (4-15/16") SHAFT					
–	–	–	S	801300	VRS1
–	–	–	V	801304	VRS1
5.999	**6.007**	**.500**	**S**	**417539**	**41**
5.999	6.007	.625	S	* 455216	45
6.131	6.136	.562	S	* 455591	45
6.250	6.256	–	S	* 6690	#
6.250	**6.256**	**.500**	**S**	**417273**	**41**
6.250	6.256	.562	S	* 455069	45
6.374	6.382	.500	S	417540	41
6.374	6.382	.625	S	* 455247	45
4.993" SHAFT					
–	–	–	S	801300	VRS1
–	–	–	V	801304	VRS1
6.000	6.006	.413	T	39881⬅	FW-H
5.000" SHAFT					
–	–	–	S	801300	VRS1
–	–	–	V	801304	VRS1
–	**–**	**.688**		**99498**	**Redi-Sleeve**

For Illustration and Material Data See Technical Section
Designed For A Specific Application - Not Recommended For General Use ➡ Hydrodynamic Lip Design-CW ⬅ Hydrodynamic Lip Design-CCW
⬅➡ Hydrodynamic Lip Design-Bidirectional % External Bore
* The U.S. customer service number is 877-4-TIMKEN. The Canadian customer service numbers are 800-565-4927 (English) and 800-565-0438 (French-Canadian). ★ Metric Seal

5.000" SHAFT (cont.)

Hsg. Bore	Seal O.D.	Seal Width	Lip Mat'l	Part No.	Type/ Illus.
–	**–**	**.813**		**99499**	**Redi-Sleeve**
5.750	–	.313	U	710032	#
5.750	5.758	.437	N	*712137	33
5.751	5.756	.500	T	*3492	48
5.751	5.756	.500	V	3492V	48
5.999	6.006	.413	T	39880⬅	94
5.999	6.006	.717	T	*5721	90
5.999	6.007	.500	S	*475725	47
5.999	6.007	.500	N	*475725N	47
5.999	6.007	.500	H	*485725H	48
5.999	6.007	.500	N	*485725N	48
5.999	6.007	.625	S	*415271	41
5.999	6.007	.625	H	*415271H	41
5.999	6.007	.625	N	*415271N	41
5.999	6.007	.625	S	*455271	45
5.999	6.007	.625	N	*455271N	45
5.999	6.007	.625	S	*475271	47
5.999	6.007	.625	S	*485271	48
5.999	6.007	.937	S	*215271	21
6.000	6.006	.413	T	39801⬅	FW-H
152,40	*152,80*	*15,00*	*T*	712109★⬅	FW-H
6.000	6.016	.591			
6.001	6.006	.500	H	*3782	#
6.001	6.006	.500	H	*715000	#
6.001	**6.007**	**.500**	**S**	**415725**	**41**
6.001	6.007	.500	N	*415725N	41
6.001	6.007	.500	S	*455725	45
6.001	6.007	.500	N	*455725N	45
6.001	6.007	.500	S	*485725	48
6.001	6.007	.625	V	*455271V	45
6.003	6.009	.500	H	*416801H	41
6.003	6.009	.500	H	*476801H	47
6.125	6.131	.500	T	39958⬅	FW-H
6.126	6.131	.562	S	417584	41
6.250	6.256	.250	S	204509	204
6.250	6.256	.500	V	416865V	41
6.250	6.256	.500	V	*456865V	45
6.250	**6.256**	**.500**	**S**	**416865**	**41**
6.250	6.256	.500	S	*456865	45
6.250	6.256	.500	N	456865N	45
6.250	6.256	.500	S	*476865	47
6.250	6.256	.500	S	*486865	48
6.250	6.256	.562	S	*415070	41
6.250	6.256	.562	N	*415070N	41
6.250	6.256	.562	V	*415070V	41
6.250	6.256	.562	S	455070	45
6.250	6.256	.562	N	*455070N	45
6.250	6.256	.562	V	*455070V	45
6.250	6.256	.562	S	*475070	47
6.250	6.256	.562	N	*475070N	47
6.250	6.256	.562	S	*485070	48
6.250	6.256	.605	S	370063A	06
6.250	6.256	.625	S	*455285	45
6.250	6.256	1.375	S	370028A	01
6.251	6.256	.500	N	*416865N	41
6.374	6.382	.625	S	*415312	41
6.374	6.382	.625	S	*455312	45
6.374	6.382	.625	V	*455312V	45
6.375	**6.381**	**.500**	**S**	**417278**	**41**
6.375	6.381	.500	S	*457278	45
6.375	6.381	.500	S	*477278	47
6.375	6.381	.500	S	*487278	48
6.499	**6.507**	**.500**	**S**	**417541**	**41**
6.499	6.507	.625	S	*415377	41
6.499	6.507	.625	S	*455377	45
6.622	6.629	.906	N	*8126N	89
6.622	6.629	.906	S	8126S	89
6.622	6.629	1.093	S	370166A	03
6.749	**6.757**	**.500**	**S**	**417542**	**41**
6.749	6.757	.625	S	*455318	45
6.874	6.882	.500	S	417543	41

5.000" SHAFT (cont.)

Hsg. Bore	Seal O.D.	Seal Width	Lip Mat'l	Part No.	Type/ Illus.
6.874	6.882	.500	V	*417543V	41
6.877	6.884	.625	S	415897	41
6.877	6.884	.625	N	*415897N	41
6.997	7.003	1.093	V	*4144V	90
7.000	7.006	1.000	S	*370154A	03
7.000	**7.007**	**.500**	**S**	**417544**	**41**
7.000	7.008	.625	S	*416176	41
7.000	7.015	1.130	V	370215A	#
7.437	7.444	.605	S	370038A	06
7.500	**7.507**	**.500**	**S**	**417545**	**41**
7.500	7.507	.562	S	*415460	41
7.500	7.507	.562	N	*415460N	41
7.500	7.507	.562	S	*455460	45
7.500	7.507	.875	N	*4048N	#

128,00mm (5.039") SHAFT

Hsg. Bore	Seal O.D.	Seal Width	Lip Mat'l	Part No.	Type/ Illus.
–	–	–	S	801300	VRS1
–	–	–	V	801304	VRS1
146,00	*146,10*	*10,00*	*S*	710411★	47
5.748	5.752	.394			
150,00	*150,28*	*15,00*	*S*	*128X150X15★	35
5.906	5.917	.591			

5.062" (5-1/16") SHAFT

Hsg. Bore	Seal O.D.	Seal Width	Lip Mat'l	Part No.	Type/ Illus.
–	–	–	S	801300	VRS1
–	–	–	V	801304	VRS1
6.374	6.382	.625	S	455290	45
6.994	7.004	1.312	L	7378	5L
7.874	7.881	.500	S	*476519	47

130,00mm (5.118") SHAFT

Hsg. Bore	Seal O.D.	Seal Width	Lip Mat'l	Part No.	Type/ Illus.
–	–	–	S	801300	VRS1
–	–	–	V	801304	VRS1
–	**–**	**.750**		**99494**	**Redi-Sleeve**
–	–	.866		99491	
149,70	*150,00*	*12,00*	*S*	*130X150X12★	32
5.894	5.906	.472			
149,70	*150,00*	*13,00*	*S*	*130X150X13★	32
5.894	5.906	.512			
150,00	*150,10*	*10,00*	*S*	130X150X10★	47
5.906	5.909	.394			
150,00	*150,10*	*10,00*	*S*	710380★	47
5.906	5.909	.394			
150,00	*150,20*	*15,00*	*S*	*130X150X15★	32
5.906	5.913	.591			
150,00	*150,40*	*13,00*	*T*	712114★⬅	FW-H
5.906	5.921	.512			
150,00	*150,44*	*14,50*	*T*	39806★➡	FW-H
5.906	5.923	.571			
150,00	*150,44*	*14,80*	*T*	39805★⬅	FW-H
5.906	5.923	.583			
154,70	*155,00*	*14,00*	*S*	*130X155X14★	32
6.090	6.102	.551			
159,70	*160,00*	*13,00*	*S*	*130X160X13★	32
6.287	6.299	.512			
159,70	*160,00*	*14,00*	*S*	*130X160X14★	32
6.287	6.299	.551			
160,00	*160,20*	*12,00*	*V*	*130X160X12V★	32
6.299	6.307	.472			
160,00	*160,20*	*15,00*	*S*	130X160X15★	32
6.299	6.307	.591			
160,00	*160,28*	*12,00*	*S*	130X160X12★	32
6.299	6.310	.472			
164,70	*165,00*	*13,00*	*S*	*130X165X13★	32
6.484	6.496	.512			
164,70	*165,00*	*15,00*	*S*	*130X165X15★	32
6.484	6.496	.591			
169,70	*170,00*	*13,00*	*S*	*130X170X13★	32
6.681	6.693	.512			

For Illustration and Material Data See Technical Section
Designed For A Specific Application - Not Recommended For General Use ➡ Hydrodynamic Lip Design-CW ⬅ Hydrodynamic Lip Design-CCW
* The U.S. customer service number is 877-4-TIMKEN. The Canadian customer service numbers are 800-565-4927 (English) and 800-565-0438 (French-Canadian). ★ Metric Seal

Hsg. Bore	Seal O.D.	Seal Width	Lip Mat'l	Part No.	Type/ Illus.
130,00mm (5.118") SHAFT (cont.)					
170,00	*170,20*	*12,00*	*V*	*130X170X12V★	35
6.693	6.701	.472			
170,00	*170,28*	*15,00*	*S*	130X170X15★	32
6.693	6.704	.591			
170,00	*170,30*	*12,00*	*S*	130X170X12★	35
6.693	6.705	.472			
189,67	*190,00*	*12,00*	*S*	*130X190X12★	32
7.467	7.480	.472			
199,67	*200,00*	*12,00*	*S*	*130X200X12★	32
7.861	7.874	.472			
5.125" (5-1/8") SHAFT					
–	–	–	S	801300	VRS1
–	–	–	V	801304	VRS1
–	–	.866		99491	
5.999	6.006	.413	T	*907091⬅	90
5.999	6.006	.413	T	*947090⬅	94
6.125	**6.131**	**.500**	**S**	**416557**	**41**
6.125	6.131	.500	V	456557	45
6.125	6.131	.500	V	*456557V	45
6.125	6.131	.562	S	*416172	41
6.125	6.131	.750	H	*8971H	7S
6.250	**6.256**	**.500**	**S**	**417258**	**41**
6.250	6.256	.562	S	*416173	41
6.250	6.256	.562	N	*416173N	41
6.250	6.256	.562	S	*476173	47
6.250	6.256	.562	V	*476173V	47
6.251	6.256	.562	S	*455824	45
6.374	**6.382**	**.500**	**S**	**417546**	**41**
6.374	6.382	.625	S	*415071	41
6.374	6.382	.625	S	*455071	45
6.375	6.381	.625	S	*456830	45
6.376	6.382	.625	N	*455071N	45
6.499	6.507	.500	S	417547	41
6.499	6.507	.625	S	*415495	41
6.499	6.507	.625	S	*455495	45
6.874	6.882	.625	N	*416049N	41
6.877	6.884	.625	S	*416977	41
5.187" SHAFT					
–	–	–	S	801300	VRS1
–	–	–	V	801304	VRS1
6.499	6.507	.500	S	417548	41
6.499	6.507	.625	N	*455494N	45
6.500	6.507	.625	H	455956H	45
6.500	6.507	.625	N	*455956N	45
6.500	6.507	.625	V	*455956V	45
6.500	6.507	.812	H	*77685H	7S
6.500	6.507	1.093	N	*75658	7S
6.500	6.507	1.093	H	*75658H	7S
6.500	6.512	.500	V	*327958⬅➡	32
6.500	6.515	.625	V	*4494V⬅➡	#
5.250" (5-1/4") SHAFT					
6.250	6.256	.250	S	447060	44
6.250	6.256	.250	V	*447060V	44
6.250	**6.256**	**.500**	**S**	**417262**	**41**
6.250	6.256	.500	V	417262V	41
6.250	6.256	.500	S	*457262	45
6.250	6.256	.500	N	*457262N	45
6.250	6.256	.500	S	*477262	47
6.250	6.256	.500	S	*487262	48
6.250	6.256	.562	S	455448	45
6.250	6.256	.562	N	*455448N	45
6.250	6.256	.562	V	*455448V	45
6.250	6.256	.625	N	*455799N	45
6.250	6.260	.250	S	345448	34
6.375	**6.381**	**.500**	**S**	**417358**	**41**
6.375	6.381	.500	S	*457358	45
6.375	6.381	.500	S	*477358	47
5.250" (5-1/4") SHAFT (cont.)					
6.375	6.381	.500	S	*487358	48
6.499	6.507	.625	S	*415104	41
6.499	6.507	.625	H	*415104H	41
6.499	6.507	.625	N	*415104N	41
6.499	6.507	.625	S	455104	45
6.500	**6.507**	**.562**	**S**	**415645**	**41**
6.500	6.507	.562	S	*455645	45
6.500	6.507	.562	S	*475645	47
6.500	6.507	.562	S	*485645	48
6.625	6.632	.562	S	417359	41
6.625	6.632	.562	S	*457359	45
6.625	6.632	.562	S	*477359	47
6.625	6.632	.562	S	*487359	48
6.750	**6.757**	**.500**	**S**	**417549**	**41**
6.750	6.757	.625	S	*455395	45
7.375	7.386	1.000	T	380069A	3
7.375	7.386	1.000	S	370069A	03
134,00mm (5.276") SHAFT					
–	–	–	S	801300	VRS1
–	–	–	V	801304	VRS1
5.312" (5-5/16") SHAFT					
–	–	–	S	801300	VRS1
–	–	–	V	801304	VRS1
6.499	6.507	.625	S	*455464	45
6.500	**6.507**	**.500**	**S**	**417550**	**41**
6.500	6.507	.625	H	*456986H	45
6.500	6.507	1.033	H	*75464H	7S
6.500	6.513	.500	T	*327984⬅	32
6.500	6.513	.500	T	*327985T⬅	32
135,00mm (5.315") SHAFT					
–	–	–	S	801300	VRS1
–	–	–	V	801304	VRS1
154,70	*155,00*	*13,00*	*S*	*135X155X13★	32
6.090	6.102	.512			
159,70	*160,00*	*15,00*	*S*	*135X160X15★	32
6.287	6.299	.591			
160,00	*160,38*	*13,00*	*S*	135X160X13★	35
6.299	6.314	.512			
164,70	*165,00*	*13,00*	*S*	*135X165X13★	32
6.484	6.496	.512			
164,70	*165,00*	*14,00*	*S*	*135X165X14★	32
6.484	6.496	.551			
170,00	*170,38*	*12,00*	*S*	135X170X12★	35
6.693	6.708	.472			
5.356" SHAFT					
–	–	–	S	801400	VRS1
–	–	–	S	801402	VRS3
6.500	6.507	.562	S	*455942	45
6.500	6.507	.562	H	*455942H	45
5.375" (5-3/8") SHAFT					
–	–	–	S	801400	VRS1
–	–	–	S	801402	VRS3
–	**–**	**.813**		***99537**	**Redi-Sleeve**
6.374	**6.380**	**.500**	**S**	**417551**	**41**
6.374	6.382	.625	S	*456174	45
6.499	**6.507**	**.562**	**S**	**455576**	**45**
6.499	6.507	.625	S	*415461	41
6.499	6.507	.625	N	*415461N	41
6.499	6.507	.625	S	*455461	45
6.500	6.507	.625	N	*455461N	45
6.624	6.632	.562	S	*455938	45
6.624	**6.632**	**.562**	**S**	**415938**	**41**

For Illustration and Material Data See Technical Section

Designed For A Specific Application - Not Recommended For General Use ⬅ Hydrodynamic Lip Design-CCW ⬅➡ Hydrodynamic Lip Design-Bidirectional

* The U.S. customer service number is 877-4-TIMKEN. The Canadian customer service numbers are 800-565-4927 (English) and 800-565-0438 (French-Canadian). ★ Metric Seal

Hsg. Bore	Seal O.D.	Seal Width	Lip Mat'l	Part No.	Type/ Illus.
5.375" (5-3/8") SHAFT (cont.)					
6.624	6.632	.625	S	*415105	41
6.624	6.632	.625	V	*415105V	41
6.624	6.632	.625	S	*455105	45
6.624	6.632	.625	N	*455105N	45
6.749	**6.757**	**.500**	**S**	**417554**	**41**
6.749	6.757	.625	S	*415140	41
6.749	6.757	.625	S	*455140	45
6.875	6.882	1.000	S	3292	89
7.500	7.508	.562	V	*456187V	45
7.873	7.881	.750	N	*456112N	45
7.874	7.881	.750	S	416112	41
7.874	7.881	.750	N	*416112N	41
7.874	7.881	.750	S	*456112	45
5.428" SHAFT					
–	–	–	S	801400	VRS1
–	–	–	S	801402	VRS3
6.500	6.505	.420	S	710425	230
138,00mm (5.433") SHAFT					
–	–	–	S	801400	VRS1
–	–	–	S	801402	VRS3
152,00	*152,10*	*12,00*	*S*	138X152X12★	47
5.984	5.988	.472			
152,00	*152,10*	*12,00*	*S*	710368★	47
5.984	5.988	.472			
152,00	*152,20*	*15,00*	*S*	*138X152X15★	32
5.984	5.992	.591			
5.437" (5-7/16") SHAFT					
–	–	–	S	801400	VRS1
–	–	–	S	801402	VRS3
6.749	6.757	.625	L	55357	5L
5.500" (5-1/2") SHAFT					
–	–	–	S	801400	VRS1
–	–	–	S	801402	VRS3
–	**–**	**.812**		**99549**	**Redi-Sleeve**
6.250	**6.257**	**.500**	**S**	**476842**	**47**
6.251	6.257	.500	H	*2151H	25
6.312	6.316	1.250	S	6872S	47
6.499	6.507	.625	S	*415273	41
6.499	6.507	.625	N	*415273N	41
6.499	6.507	.625	S	*455273	45
6.499	6.507	.625	N	*455273N	45
6.499	6.507	.625	V	*455273V	45
6.500	6.505	1.125	S	*2363	#
6.500	6.505	1.125	S	6873S	43
6.500	**6.507**	**.562**	**S**	**417254**	**41**
6.500	6.507	.562	N	*417254N	41
6.500	6.507	.562	S	*457254	45
6.500	6.507	.562	S	*477254	47
6.500	6.507	.562	S	*487254	48
6.624	6.631	.625	S	*416189	41
6.624	6.631	.625	S	*456189	45
6.625	**6.632**	**.562**	**S**	**417360**	**41**
6.625	6.632	.562	S	*457360	45
6.625	6.632	.562	S	*477360	47
6.625	6.632	.562	S	*487360	48
6.625	6.632	.670	H	3054	41
6.625	6.632	.670	V	*3054V	41
6.625	6.632	.670	H	*77286H	7S
6.749	6.756	.500	V	*455215V	45
6.749	6.756	.625	S	*415073	41
6.749	6.756	.625	H	*415073H	41
6.749	6.756	.625	N	*415073N	41
6.749	6.756	.625	V	*415073V	41
6.749	6.757	.625	S	455073	45
5.500" (5-1/2") SHAFT (cont.)					
6.750	6.757	.500	S	*475638	47
6.750	6.757	.575	S	*476107	47
6.750	6.757	.575	S	*486107	48
6.750	**6.758**	**.575**	**S**	**416107**	**41**
6.750	6.758	.575	S	*456107	45
6.874	6.882	.625	S	*416190	41
6.874	6.882	.625	S	*456190	45
6.875	**6.882**	**.562**	**S**	**417361**	**41**
6.875	6.882	.562	S	*457361	45
6.875	6.882	.562	S	*477361	47
6.875	6.882	.562	S	*487361	48
6.875	6.882	.625	N	*456190N	45
6.997	7.004	1.250	S	7006S	43
7.000	7.007	.625	S	415610	41
7.125	7.132	1.187	S	370043A	03
7.125	7.133	.625	S	416191	41
7.248	7.255	.656	N	*485869N	48
7.250	7.256	1.187	S	370120A	03
7.437	7.444	1.000	S	370039A	03
7.500	**7.507**	**.562**	**S**	**456192**	**45**
7.500	7.507	.562	N	*456192N	45
7.624	7.631	1.250	S	8635S	21
7.625	7.631	1.250	S	*3402	#
7.876	7.883	.750	S	*455661	45
8.000	8.009	.625	S	*416195	41
8.000	8.009	.750	S	*416196	41
8.494	8.501	1.062	S	*3098	#
8.500	8.507	.625	S	*417419	41
140,00mm (5.512") SHAFT					
–	–	–	S	801400	VRS1
–	–	–	S	801402	VRS3
–	**–**	**.807**		**★99552**	**Redi-Sleeve**
159,70	*160,00*	*14,00*	*S*	*140X160X14★	32
6.287	6.299	.551			
160,00	*160,20*	*12,00*	*S*	140X160X12★	32
6.299	6.307	.472			
160,00	*160,27*	*13,00*	*S*	140X160X13★	35
6.299	6.310	.512			
160,00	*160,27*	*13,00*	*S*	231402★	35
6.299	6.310	.512			
164,70	*165,00*	*13,00*	*S*	*140X165X13★	32
6.484	6.496	.512			
165,00	*165,28*	*15,00*	*S*	*140X165X15★	32
6.496	6.507	.591			
167,70	*168,00*	*15,00*	*S*	*140X168X15★	32
6.602	6.614	.591			
169,70	*170,00*	*13,00*	*S*	*140X170X13★	32
6.681	6.693	.512			
169,70	*170,00*	*14,00*	*S*	*140X170X14★	32
6.681	6.693	.551			
170,00	*170,10*	*14,00*	*S*	710406★	47
6.693	6.697	.551			
170,00	*170,20*	*12,00*	*V*	*140X170X12V★	32
6.693	6.701	.472			
170,00	*170,28*	*15,00*	*S*	231405★	35
6.693	6.704	.591			
170,00	*170,30*	*12,00*	*S*	140X170X12★	32
6.693	6.705	.472			
170,00	*170,43*	*15,00*	*S*	140X170X15★	32
6.693	6.710	.591			
174,70	*175,00*	*15,00*	*S*	*140X175X15★	32
6.878	6.890	.591			
179,67	*180,00*	*15,00*	*S*	*140X180X15★	32
7.074	7.087	.591			
180,00	*180,30*	*12,00*	*S*	140X180X12★	35
7.087	7.098	.472			
180,00	*180,38*	*18,00*	*S*	140X180X18★	32
7.087	7.102	.709			
184,67	*185,00*	*16,00*	*S*	*140X185X16★	32
7.270	7.283	.630			

For Illustration and Material Data See Technical Section

Designed For A Specific Application - Not Recommended For General Use

* The U.S. customer service number is 877-4-TIMKEN. The Canadian customer service numbers are 800-565-4927 (English) and 800-565-0438 (French-Canadian). ★ Metric Seal

Hsg. Bore	Seal O.D.	Seal Width	Lip Mat'l	Part No.	Type/ Illus.
142,00mm (5.591") SHAFT					
156,70	*157,00*	*10,00*	*S*	*142X157X10★	32
6.169	6.181	.394			
5.625" (5-5/8") SHAFT					
–	–	–	S	801400	VRS1
–	–	–	S	801402	VRS3
6.624	**6.631**	**.500**	**S**	**417555**	**41**
6.624	6.631	.625	S	*455487	45
6.624	6.631	.625	H	*455487H	45
6.624	6.631	.625	N	*455487N	45
6.625	6.631	.500	S	*415920	41
6.625	6.631	.625	S	*415487	41
6.625	6.631	.625	N	*415487N	41
6.750	6.757	.500	V	*417942V	41
6.874	**6.882**	**.500**	**S**	**417556**	**41**
6.874	6.882	.500	V	*417556V	41
6.874	6.882	.625	S	*455106	45
7.125	**7.131**	**.500**	**S**	**417040**	**41**
7.125	7.133	.625	S	*455652	45
7.186	7.194	.906	S	370064A	03
7.500	7.508	.562	S	*456199	45
5.640" SHAFT					
7.501	7.507	.605	S	370119A	06
144,00mm (5.669") SHAFT					
–	–	–	S	801400	VRS1
–	–	–	S	801402	VRS3
160,00	*160,25*	*12,00*	*S*	144X160X12★	35
6.299	6.309	.472			
145,00mm (5.709") SHAFT					
–	–	–	S	801400	VRS1
–	–	–	S	801402	VRS3
164,00	*164,10*	*14,00*	*S*	145X164X14★	47
6.457	6.461	.551			
164,00	*164,10*	*14,00*	*S*	710369★	47
6.457	6.461	.551			
164,00	*164,20*	*15,00*	*S*	*145X164X15★	32
6.457	6.465	.591			
164,70	*165,00*	*13,00*	*S*	*145X165X13★	32
6.484	6.496	.512			
164,70	*165,00*	*14,00*	*S*	*145X165X14★	32
6.484	6.496	.551			
166,70	*167,00*	*13,00*	*S*	*145X167X13★	32
6.563	6.575	.512			
169,70	*170,00*	*13,00*	*S*	*145X170X13★	32
6.681	6.693	.512			
169,70	*170,00*	*15,00*	*S*	*145X170X15★	32
6.681	6.693	.591			
170,00	*170,45*	*12,00*	*S*	145X170X12★	32
6.693	6.711	.472			
174,70	*175,00*	*13,00*	*S*	*145X175X13★	32
6.878	6.890	.512			
174,70	*175,00*	*14,00*	*S*	*145X175X14★	32
6.878	6.890	.551			
175,00	*175,38*	*15,00*	*S*	145X175X15★	32
6.890	6.905	.591			
180,00	*180,28*	*12,00*	*S*	145X180X12★	35
7.087	7.098	.472			
146,00mm (5.748") SHAFT					
–	–	–	S	801500	VRS1
–	–	–	V	801504	VRS1
–	**–**	**.813**		**99575**	**Redi-Sleeve**
6.751	6.763	.500	V	*357971V	35
5.750" (5-3/4") SHAFT					
–	–	–	S	801500	VRS1
–	–	–	V	801504	VRS1
–	**–**	**.813**		**99575**	**Redi-Sleeve**
6.500	6.510	.500	S	*7743	#
6.624	**6.632**	**.625**	**S**	**415447**	**41**
6.624	6.632	.625	S	*455447	45
6.749	6.756	.625	S	*415363	41
6.749	6.756	.625	H	*415363H	41
6.749	6.757	.625	S	*455363	45
6.750	6.757	.562	S	*457362	45
6.750	6.757	.575	N	*417362N	41
6.750	**6.757**	**.575**	**S**	**417362**	**41**
6.750	6.757	.575	V	*417362V	41
6.750	6.757	.575	S	*477362	47
6.750	6.757	.575	S	*487362	48
6.874	6.882	.625	S	*416214	41
6.874	6.882	.625	S	*456214	45
6.875	6.882	.562	S	417363	41
6.875	6.882	.562	S	*457363	45
6.875	6.882	.562	S	*477363	47
6.875	6.882	.562	S	*487363	48
7.000	7.008	.625	S	*455107	45
7.000	7.008	.625	H	*455107H	45
7.000	7.008	.625	N	*455107N	45
7.000	7.008	.625	V	*455107V	45
7.001	**7.008**	**.562**	**S**	**416666**	**41**
7.001	7.008	.562	V	*416666V	41
7.001	7.008	.562	S	*456666	45
7.001	7.008	.562	S	*476666	47
7.001	7.008	.562	S	*486666	48
7.125	7.132	.562	S	417364	41
7.125	7.132	.562	S	*457364	45
7.125	7.132	.562	S	*477364	47
7.125	7.132	.562	S	*487364	48
7.125	7.133	.625	S	*416215	41
7.125	7.133	.625	S	*456215	45
7.500	7.506	.500	S	*457557	45
7.500	**7.508**	**.562**	**S**	**416039**	**41**
7.500	7.508	.562	S	*456039	45
7.500	7.508	.562	N	*456039N	45
7.874	7.881	.750	S	416029	41
7.874	**7.881**	**.750**	**N**	**416029N**	**41**
7.875	7.883	.750	S	*455618	45
5.812" (5-13/16") SHAFT					
–	–	–	S	801500	VRS1
–	–	–	V	801504	VRS1
7.125	7.132	.625	S	*8662	35
148,00mm (5.827") SHAFT					
–	–	–	S	801500	VRS1
–	–	–	V	801504	VRS1
170,00	*170,28*	*15,00*	*S*	148X170X15★	35
6.693	6.704	.591			
5.875" (5-7/8") SHAFT					
–	–	–	S	801500	VRS1
–	–	–	V	801504	VRS1
–	**–**	**1.000**		***99587**	**Redi-Sleeve**
7.125	7.133	.500	S	*3620	#
7.125	**7.133**	**.500**	**S**	**416476**	**41**
7.125	7.133	.625	S	*415075	41
7.125	7.133	.625	N	*415075N	41
7.125	7.133	.625	S	455075	45
7.500	**7.508**	**.562**	**S**	**455297**	**45**
7.999	8.007	.750	S	456052	45
8.001	8.007	.750	S	3016	45

For Illustration and Material Data See Technical Section

Designed For A Specific Application - Not Recommended For General Use

* The U.S. customer service number is 877-4-TIMKEN. The Canadian customer service numbers are 800-565-4927 (English) and 800-565-0438 (French-Canadian). ★ Metric Seal

Hsg. Bore	Seal O.D.	Seal Width	Lip Mat'l	Part No.	Type/ Illus.
150,00mm (5.906") SHAFT					
–	–	–	S	801500	VRS1
–	–	–	V	801504	VRS1
167,70	*168,00*	*13,00*	*S*	*150X168X13★	32
6.602	6.614	.512			
169,70	*170,00*	*15,00*	*S*	*150X170X15★	32
6.681	6.693	.591			
174,70	*175,00*	*10,00*	*S*	*150X175X10★	32
6.878	6.890	.394			
179,67	*180,00*	*13,00*	*S*	*150X180X13★	32
7.074	7.087	.512			
179,67	*180,00*	*14,00*	*S*	*150X180X14★	32
7.074	7.087	.551			
180,00	*180,20*	*15,00*	*V*	*150X180X15V★	32
7.087	7.094	.591			
180,00	*180,35*	*12,00*	*S*	150X180X12★	32
7.087	7.100	.472			
180,00	*180,35*	*15,00*	*S*	150X180X15★	35
7.087	7.100	.591			
184,67	*185,00*	*16,00*	*S*	*150X185X16★	32
7.270	7.283	.630			
189,67	*190,00*	*15,00*	*S*	*150X190X15★	32
7.467	7.480	.591			
199,67	*200,00*	*13,00*	*S*	*150X200X13★	32
7.861	7.874	.512			
209,67	*210,00*	*15,00*	*S*	*150X210X15★	32
8.255	8.268	.591			
224,67	*225,00*	*12,00*	*S*	*150X225X12★	32
8.845	8.858	.472			
5.937" (5-15/16") SHAFT					
–	–	–	S	801500	VRS1
–	–	–	V	801504	VRS1
–	**–**	**1.000**		***99596**	**Redi-Sleeve**
6.801	–	1.125	S	8907	#
7.502	7.508	.562	S	417780	41
5.997" SHAFT					
–	–	–	S	801500	VRS1
–	–	–	V	801504	VRS1
–	**–**	**.500**		**99601**	**Redi-Sleeve**
–	**–**	**1.000**		**99599**	**Redi-Sleeve**
7.125	7.131	.500	T	39956⬅	DW-H
6.000" SHAFT					
–	–	–	S	801500	VRS1
–	–	–	V	801504	VRS1
–	**–**	**.500**		**99601**	**Redi-Sleeve**
–	**–**	**1.000**		**99599**	**Redi-Sleeve**
6.750	6.756	.437	T	39807⬅	W-H
6.750	6.757	.500	H	*2297⬅	25
6.750	6.757	.500	V	2297V⬅	25
6.750	6.757	.625	T	39823➡	DW-H
6.751	6.757	.375	S	447793	44
7.000	**7.007**	**.500**	**S**	**415683**	**41**
7.000	7.008	.625	S	*416055	41
7.000	7.008	.625	N	*416055N	41
7.001	7.008	.625	V	456055	45
7.001	7.008	.625	N	*456055N	45
7.001	7.008	.625	V	*456055V	45
7.125	**7.132**	**.562**	**S**	**417365**	**41**
7.125	7.132	.562	S	*457365	45
7.125	7.132	.562	S	*477365	47
7.125	7.132	.562	S	*487365	48
7.125	7.133	.625	S	*416219	41
7.125	7.133	.625	H	*416219H	41
7.125	7.133	.625	N	*416219N	41
7.125	7.133	.625	N	*456219N	45
6.000" SHAFT (cont.)					
7.127	7.133	.500	S	*447582	44
7.238	7.244	.472	S	*447975	44
7.475	7.481	.590	T	39715⬅	#
7.500	**7.508**	**.562**	**S**	**415072**	**41**
7.500	7.508	.562	H	*415072H	41
7.500	7.508	.562	V	*415072V	41
7.500	7.508	.562	S	*455072	45
7.501	7.508	.562	S	*475072	47
7.501	7.508	.562	S	*485072	48
7.875	7.881	.605	S	*370077A	06
8.187	8.194	1.250	S	*8091	#
8.500	8.509	.625	S	*416232	41
154,00mm (6.063") SHAFT					
–	–	–	S	801500	VRS1
–	–	–	V	801504	VRS1
171,70	*172,00*	*14,00*	*S*	*154X172X14★	32
6.760	6.772	.551			
172,00	*172,20*	*15,00*	*S*	*154X172X15★	32
6.772	6.780	.591			
6.077" SHAFT					
–	–	–	S	801500	VRS1
–	–	–	V	801504	VRS1
7.328	7.336	.445	T	39889⬅	W-H
7.328	7.336	.445	T	39890➡	W-H
155,00mm (6.102") SHAFT					
–	**–**	**1.024**		**99606**	**Redi-Sleeve**
171,70	*172,00*	*14,00*	*S*	*155X172X14★	32
6.760	6.772	.551			
173,70	*174,00*	*12,00*	*S*	*155X174X12★	32
6.838	6.850	.472			
179,67	*180,00*	*12,00*	*S*	*155X180X12★	32
7.074	7.087	.472			
179,67	*180,00*	*13,00*	*S*	*155X180X13★	32
7.074	7.087	.512			
180,00	*180,23*	*15,00*	*S*	155X180X15★	32
7.087	7.096	.591			
184,67	*185,00*	*16,00*	*S*	*155X185X16★	32
7.270	7.283	.630			
6.107" SHAFT					
6.750	6.757	.500	V	*4165⬅	#
6.750	6.757	.500	V	*4165V⬅	#
6.750	6.757	.675	V	*600319⬅	41
6.110" SHAFT					
7.187	7.192	.400	S	*710500	230
6.125" (6-1/8") SHAFT					
6.750	6.757	.375	H	*336665H	33
7.125	7.131	.500	V	*486701	48
7.125	7.133	.625	S	*415330	41
7.125	**7.133**	**.625**	**S**	**455330**	**45**
7.125	7.133	.625	H	*455330H	45
7.500	**7.508**	**.562**	**S**	**415074**	**41**
7.500	7.508	.562	H	*415074H	41
7.500	7.508	.562	N	*415074N	41
7.500	7.508	.562	S	*455074	45
7.627	**7.633**	**.625**	**S**	**457874**	**45**
7.750	7.756	.750	S	*417017	41
7.875	7.881	.750	N	*417053N	41

For Illustration and Material Data See Technical Section

Designed For A Specific Application - Not Recommended For General Use ➡ Hydrodynamic Lip Design-CW ⬅ Hydrodynamic Lip Design-CCW

* The U.S. customer service number is 877-4-TIMKEN. The Canadian customer service numbers are 800-565-4927 (English) and 800-565-0438 (French-Canadian). ★ Metric Seal

Hsg. Bore	Seal O.D.	Seal Width	Lip Mat'l	Part No.	Type/ Illus.
156,00mm (6.142") SHAFT					
180,00	*180,20*	*15,00*	*T*	712110★⬅	W
7.087	7.094	.591			
180,00	*180,40*	*15,00*	*T*	712122★⬅	FW-H
7.087	7.102	.591			
8.000	8.007	.658	V	*4602V	#
6.187" (6-3/16") SHAFT					
7.250	7.258	.734	S	417921	41
7.500	7.507	.562	H	*455583H	45
7.500	**7.507**	**.562**	**N**	**455583N**	**45**
7.500	7.508	.562	S	455583	45
6.198" SHAFT					
7.328	7.336	.354	T	39885⬅	FW-H
7.328	7.336	.445	T	39888⬅	FW-H
6.202" SHAFT					
7.329	7.336	.377	T	39886⬅	DW-H
6.204" SHAFT					
7.328	7.336	.562	H	2628	64
7.330	7.336	.445	T	39887➡	FW-H
6.238" SHAFT					
8.654	8.661	.560	T	*39044⬅	90
8.655	8.661	1.100	T	39883⬅	90
6.250" (6-1/4") SHAFT					
–	**–**	**1.031**		**99625**	**Redi-Sleeve**
7.500	7.508	.562	S	*415480	41
7.500	**7.508**	**.562**	**S**	**455480**	**45**
7.500	7.508	.562	H	*455480H	45
7.500	7.508	.562	V	455480V	45
7.750	**7.758**	**.500**	**S**	**417562**	**41**
7.750	7.758	.750	S	*455109	45
7.875	**7.881**	**.750**	**S**	**415854**	**41**
7.875	7.881	.750	S	*455854	45
160,00mm (6.299") SHAFT					
–	**–**	**1.000**		**99630**	**Redi-Sleeve**
179,67	*180,00*	*10,00*	*S*	*160X180X10★	32
7.074	7.087	.394			
179,67	*180,00*	*13,00*	*S*	*160X180X13★	32
7.074	7.087	.512			
181,67	*182,00*	*18,00*	*S*	*160X182X18★	32
7.152	7.165	.709			
184,67	*185,00*	*13,00*	*S*	*160X185X13★	32
7.270	7.283	.512			
185,00	*185,20*	*10,00*	*V*	*160X185X10V★	35
7.283	7.291	.394			
185,00	*185,35*	*10,00*	*S*	160X185X10★	35
7.283	7.297	.394			
189,67	*190,00*	*13,00*	*S*	*160X190X13★	32
7.467	7.480	.512			
190,00	*190,20*	*15,00*	*V*	*160X190X15V★	32
7.480	7.488	.591			
190,00	*190,35*	*15,00*	*S*	160X190X15★	32
7.480	7.494	.591			
190,00	*190,40*	*13,00*	*T*	712118★⬅	FW-H
7.480	7.496	.512			
199,67	*200,00*	*14,00*	*S*	*160X200X14★	32
7.861	7.874	.551			
200,00	*200,20*	*12,00*	*S*	160X200X12★	32
7.874	7.882	.472			
160,00mm (6.299") SHAFT (cont.)					
200,00	*200,20*	*15,00*	*S*	160X200X15★	32
7.874	7.882	.591			
239,67	*240,00*	*15,00*	*S*	*160X240X15★	32
9.436	9.449	.591			
6.312" SHAFT					
7.500	7.507	.690	H	*3061H	41
7.500	7.507	.690	V	*3061V	41
7.500	7.507	.690	H	*77322H	7S
7.500	7.507	.690	V	*77322V	7S
6.328" SHAFT					
7.329	7.336	.500	H	3807	64
6.375" (6-3/8") SHAFT					
7.875	7.881	.750	S	*415110	41
7.875	**7.883**	**.500**	**S**	**417563**	**41**
8.000	8.008	1.060	S	*7516	#
162,00mm (6.378") SHAFT					
200,00	*200,20*	*15,00*	*S*	*162X200X15★	32
7.874	7.882	.591			
165,00mm (6.496") SHAFT					
–	**–**	**1.000**		**99650**	**Redi-Sleeve**
189,67	*190,00*	*14,00*	*S*	*165X190X14★	32
7.467	7.480	.551			
189,67	*190,00*	*15,00*	*S*	*165X190X15★	32
7.467	7.480	.591			
190,00	*190,35*	*13,00*	*S*	165X190X13★	41
7.480	7.494	.512			
7.632	7.638	.497	T	37586	#
194,67	*195,00*	*15,00*	*S*	*165X195X15★	32
7.664	7.677	.591			
199,67	*200,00*	*14,00*	*S*	*165X200X14★	32
7.861	7.874	.551			
9.600	9.606	.540	T	39861⬅	#
6.500" (6-1/2") SHAFT					
–	–	–	S	801700	VRS1
–	–	–	S	801701	VRS2
–	**–**	**1.000**		**99650**	**Redi-Sleeve**
7.382	7.392	.622	S	*415913	41
7.382	7.392	.622	N	*415913N	41
7.500	**7.508**	**.562**	**S**	**415294**	**41**
7.500	7.508	.562	N	*415294N	41
7.500	7.508	.562	S	455294	45
7.500	7.508	.562	N	*455294N	45
7.500	7.508	.562	V	*455294V	45
7.501	7.508	.812	S	*3276	#
7.627	7.633	.625	S	*457808	45
8.000	8.007	.625	T	41509➡	PDW
8.000	8.007	.625	T	41510⬅	PDW
8.000	**8.009**	**.625**	**S**	**416229**	**41**
8.000	8.009	.625	N	*416229N	41
8.000	8.009	.750	S	*415111	41
8.000	8.009	.750	S	*455111	45
8.000	8.009	.750	H	*455111H	45
8.750	8.757	.750	N	*457131N	45
9.252	9.260	.750	S	*416592	41
6.625" (6-5/8") SHAFT					
–	–	–	S	801700	VRS1
–	–	–	S	801701	VRS2
8.000	8.007	.750	T	*914411⬅	91

For Illustration and Material Data See Technical Section

Designed For A Specific Application - Not Recommended For General Use ➡ Hydrodynamic Lip Design-CW ⬅ Hydrodynamic Lip Design-CCW

* The U.S. customer service number is 877-4-TIMKEN. The Canadian customer service numbers are 800-565-4927 (English) and 800-565-0438 (French-Canadian). ★ Metric Seal

6.625" (6-5/8") SHAFT (cont.)

Hsg. Bore	Seal O.D.	Seal Width	Lip Mat'l	Part No.	Type/ Illus.
8.000	8.007	.750	T	*914412⬅	91
8.000	8.007	1.000	T	*914413➡	91
8.007	8.014	.605	S	*370149A	06
8.125	**8.134**	**.625**	**S**	**417298**	**41**
9.615	9.622	.979	V	*4354V	#

170,00mm (6.693") SHAFT

Hsg. Bore	Seal O.D.	Seal Width	Lip Mat'l	Part No.	Type/ Illus.
–	–	–	S	801700	VRS1
–	–	–	S	801701	VRS2
–	**–**	**1.250**		***99640**	**Redi-Sleeve**
189,67	*190,00*	*10,00*	*S*	*170X190X10★	32
7.467	7.480	.394			
189,67	*190,00*	*14,00*	*S*	*170X190X14★	32
7.467	7.480	.551			
200,00	*200,35*	*15,00*	*S*	170X200X15★	32
7.874	7.888	.591			
210,00	*210,20*	*15,00*	*S*	170X210X15★	32
8.268	8.276	.591			

6.750" (6-3/4") SHAFT

Hsg. Bore	Seal O.D.	Seal Width	Lip Mat'l	Part No.	Type/ Illus.
–	–	–	S	801700	VRS1
–	–	–	S	801701	VRS2
–	**–**	**.813**		**99675**	**Redi-Sleeve**
7.657	7.750	.500	S	*476871	47
8.000	8.007	.625	S	*455327	45
8.000	8.007	.625	V	*455327V	45
8.000	**8.009**	**.625**	**S**	**415327**	**41**
8.000	8.009	.625	H	*415327H	41
8.000	8.009	.625	N	*415327N	41
8.007	8.017	.625	S	416362	41
8.007	8.017	.625	N	*416362N	41
8.007	8.017	.625	V	*416362V	41
8.250	**8.257**	**.562**	**S**	**417596**	**41**
8.250	8.257	.750	S	*415092	41
8.500	8.509	.625	S	416008	41

6.772" SHAFT

Hsg. Bore	Seal O.D.	Seal Width	Lip Mat'l	Part No.	Type/ Illus.
–	–	–	S	801700	VRS1
–	–	–	S	801701	VRS2
9.000	9.007	.658	V	*4603V	#

6.775" SHAFT

Hsg. Bore	Seal O.D.	Seal Width	Lip Mat'l	Part No.	Type/ Illus.
–	–	–	S	801700	VRS1
–	–	–	S	801701	VRS2
7.875	7.880	.360	S	710562	230

6.875" (6-7/8") SHAFT

Hsg. Bore	Seal O.D.	Seal Width	Lip Mat'l	Part No.	Type/ Illus.
–	–	–	S	801700	VRS1
–	–	–	S	801701	VRS2
7.875	**7.883**	**.625**	**S**	**455948**	**45**
8.375	**8.382**	**.625**	**S**	**455584**	**45**
8.375	8.382	.625	N	*455584N	45
8.375	8.382	.750	S	*455114	45
8.543	8.543	.825	S	*3124%	46

175,00mm (6.890") SHAFT

Hsg. Bore	Seal O.D.	Seal Width	Lip Mat'l	Part No.	Type/ Illus.
–	–	–	S	801700	VRS1
–	–	–	S	801701	VRS2
–	–	–	S	801800	VRS1
200,00	*200,35*	*15,00*	*S*	175X200X15★	32
7.874	7.888	.591			
209,67	*210,00*	*15,00*	*S*	*175X210X15★	32
8.255	8.268	.591			
229,67	*230,00*	*20,00*	*S*	*175X230X20★	32
9.042	9.055	.787			

6.937" (6-15/16") SHAFT

Hsg. Bore	Seal O.D.	Seal Width	Lip Mat'l	Part No.	Type/ Illus.
–	–	–	S	801800	VRS1
8.129	8.138	.750	S	*455592	45

6.956" SHAFT

Hsg. Bore	Seal O.D.	Seal Width	Lip Mat'l	Part No.	Type/ Illus.
–	–	–	S	801800	VRS1
8.625	8.633	.750	S	*3123	#

7.000" SHAFT

Hsg. Bore	Seal O.D.	Seal Width	Lip Mat'l	Part No.	Type/ Illus.
–	–	–	S	801800	VRS1
–	**–**	**1.000**		**99700**	**Redi-Sleeve**
8.000	8.007	.562	S	*455699	45
8.000	8.007	.750	S	*455517	45
8.000	8.007	.750	N	*455517N	45
8.000	**8.009**	**.625**	**S**	**416364**	**41**
8.000	8.009	.625	N	*416364N	41
8.000	8.009	.625	V	*416364V	41
8.000	8.009	.625	S	*456364	45
8.000	8.009	.625	N	*456364N	45
8.000	8.009	.625	V	*456364V	45
8.000	8.009	.750	S	*415517	41
8.001	8.009	.750	S	*455282	45
8.001	8.009	.750	N	*455282N	45
8.250	**8.257**	**.625**	**S**	**417597**	**41**
8.250	8.258	.750	S	*455452	45
8.251	8.258	.625	S	*457466	45
8.375	8.382	.625	S	417255	41
8.375	8.382	.750	S	*416674	41
8.375	8.382	.750	N	*416674N	41
8.375	8.382	.750	V	416674V	41
8.377	8.384	.750	S	*456724	45
8.500	8.507	1.031	S	*216239	21
8.500	**8.509**	**.625**	**S**	**416239**	**41**
8.500	8.509	.750	S	*415084	41
8.500	8.509	.750	N	*415084N	41
8.500	8.509	.750	S	*455084	45
8.500	8.509	.750	S	*475084	47
8.750	8.759	.625	S	417564	41
8.750	8.759	.750	S	*455421	45
9.313	**9.321**	**.625**	**S**	**415876**	**41**
9.313	9.321	.625	V	415876V	41

180,00mm (7.087") SHAFT

Hsg. Bore	Seal O.D.	Seal Width	Lip Mat'l	Part No.	Type/ Illus.
–	–	–	S	801800	VRS1
–	**–**	**1.300**		***99721**	**Redi-Sleeve**
199,67	*200,00*	*14,00*	*S*	*180X200X14★	32
7.861	7.874	.551			
199,67	*200,00*	*15,00*	*S*	*180X200X15★	32
7.861	7.874	.591			
210,00	*210,35*	*15,00*	*S*	180X210X15★	32
8.268	8.281	.591			
214,67	*215,00*	*15,00*	*S*	*180X215X15★	32
8.452	8.465	.591			
219,67	*220,00*	*15,00*	*S*	*180X220X15★	32
8.648	8.661	.591			
219,67	*220,00*	*16,00*	*S*	*180X220X16★	32
8.648	8.661	.630			

7.117" SHAFT

Hsg. Bore	Seal O.D.	Seal Width	Lip Mat'l	Part No.	Type/ Illus.
–	–	–	S	801800	VRS1
8.126	8.134	.750	S	*415859	41

7.125" (7-1/8") SHAFT

Hsg. Bore	Seal O.D.	Seal Width	Lip Mat'l	Part No.	Type/ Illus.
–	–	–	S	801800	VRS1
8.007	8.017	.625	S	*415927	41
8.494	8.501	1.062	S	*7747	47
8.625	**8.632**	**.562**	**S**	**416077**	**41**
8.625	8.632	.562	N	*416077N	41

For Illustration and Material Data See Technical Section
Designed For A Specific Application - Not Recommended For General Use ➡ Hydrodynamic Lip Design-CW ⬅ Hydrodynamic Lip Design-CCW % External Bore
* The U.S. customer service number is 877-4-TIMKEN. The Canadian customer service numbers are 800-565-4927 (English) and 800-565-0438 (French-Canadian). ★ Metric Seal

Hsg. Bore	Seal O.D.	Seal Width	Lip Mat'l	Part No.	Type/ Illus.
7.125" (7-1/8") SHAFT (cont.)					
8.625	8.634	.750	S	*415115	41
8.625	8.634	.750	N	*415115N	41
7.250" (7-1/4") SHAFT					
–	–	–	S	801800	VRS1
–	**–**	**1.250**		***99725**	**Redi-Sleeve**
8.125	8.132	.940	T	39815⬅	DW-H
8.125	8.133	.500	T	39701⬅	FW-H
8.250	8.257	.625	S	*456044	45
8.250	**8.257**	**.625**	**S**	**416044**	**41**
8.750	8.758	.605	S	370175A	06
8.750	**8.759**	**.750**	**S**	**415116**	**41**
9.125	9.133	.750	S	*416395	41
185,00mm (7.283") SHAFT					
–	–	–	S	801800	VRS1
209,67	*210,00*	*15,00*	*S*	*185X210X15★	32
8.255	8.268	.591			
210,00	*210,35*	*13,00*	*S*	185X210X13★	35
8.268	8.281	.512			
215,00	*215,22*	*16,00*	*S*	*185X215X16★	32
8.465	8.473	.630			
7.375" (7-3/8") SHAFT					
–	–	–	S	801900	VRS1
–	–	–	S	801901	VRS2
8.875	**8.882**	**.750**	**S**	**455117**	**45**
8.875	8.882	.750	V	*455117V	45
9.000	9.010	.750	S	415317	41
9.054	9.063	1.062	S	*370082A	03
9.375	9.382	.750	S	*456248	45
9.615	9.622	.979	V	4353	#
190,00mm (7.480") SHAFT					
–	–	–	S	801900	VRS1
–	–	–	S	801901	VRS2
–	–	–	S	802000	VRS1
209,67	*210,00*	*10,00*	*S*	*190X210X10★	32
8.255	8.268	.394			
209,67	*210,00*	*15,00*	*S*	*190X210X15★	32
8.255	8.268	.591			
220,00	*220,35*	*15,00*	*S*	*190X220X15★	32
8.661	8.675	.591			
220,00	*220,35*	*16,00*	*S*	*231905★	35
8.661	8.675	.630			
220,00	*220,35*	*16,00*	*S*	190X220X16★	32
8.661	8.675	.630			
224,67	*225,00*	*12,00*	*S*	*190X225X12★	32
8.845	8.858	.472			
224,67	*225,00*	*16,00*	*S*	*190X225X16★	32
8.845	8.858	.630			
225,00	*225,20*	*16,00*	*V*	*190X225X16V★	32
8.858	8.866	.630			
229,67	*230,00*	*15,00*	*S*	*190X230X15★	32
9.042	9.055	.591			
230,00	*230,20*	*16,00*	*S*	190X230X16★	32
9.055	9.063	.630			
7.500" (7-1/2") SHAFT					
–	–	–	S	801900	VRS1
–	–	–	S	801901	VRS2
–	–	–	S	802000	VRS1
–	**–**	**.813**		**99750**	**Redi-Sleeve**
8.500	**8.509**	**.625**	**S**	**415867**	**41**
8.500	8.509	.625	V	455867V	45
9.000	**9.010**	**.750**	**S**	**415551**	**41**
9.000	9.010	.750	N	*415551N	41
7.500" (7-1/2") SHAFT (cont.)					
9.000	9.010	.750	V	415551V	41
9.000	9.010	.750	S	*455551	45
9.000	9.010	.750	N	*455551N	45
9.243	9.250	.625	S	417283	41
9.243	9.250	.625	N	*417283N	41
9.750	9.758	.625	N	*417904N	41
10.500	10.510	.750	S	417385	41
10.500	10.510	.750	V	*417385V	41
7.625" (7-5/8") SHAFT					
–	–	–	S	801900	VRS1
–	–	–	S	801901	VRS2
–	–	–	S	802000	VRS1
8.623	8.630	.715	S	*416482	41
8.625	8.632	.562	S	416102	41
9.125	**9.133**	**.625**	**S**	**417598**	**41**
9.125	9.133	.625	V	417598V	41
9.250	9.258	.625	S	*457991	45
195,00mm (7.677") SHAFT					
229,67	*230,00*	*16,00*	*S*	*195X230X16★	32
9.042	9.055	.630			
229,67	*230,00*	*20,00*	*S*	*195X230X20★	32
9.042	9.055	.787			
7.718" (7-25/32") SHAFT					
–	–	–	S	801990	VRS1
–	–	–	S	801991	VRS2
–	–	–	S	802000	VRS1
9.186	9.191	.875	S	*8562	#
7.750" (7-3/4") SHAFT					
–	–	–	S	801990	VRS1
–	–	–	S	801991	VRS2
–	–	–	S	802000	VRS1
–	**–**	**1.000**		***99775**	**Redi-Sleeve**
9.000	9.010	.625	S	457299	45
9.250	9.258	.750	S	*415120	41
9.250	**9.260**	**.625**	**S**	**455406**	**45**
10.000	**10.008**	**.750**	**S**	**417115**	**41**
10.500	10.510	.750	N	*457149N	45
10.500	10.510	.750	V	*457149V	45
7.872" SHAFT					
–	–	–	S	801990	VRS1
–	–	–	S	801991	VRS2
–	–	–	S	802000	VRS1
–	**–**	**1.359**		**99787**	**Redi-Sleeve**
9.500	9.507	.750	S	*455945	45
200,00mm (7.874") SHAFT					
–	–	–	S	801990	VRS1
–	–	–	S	801991	VRS2
–	–	–	S	802000	VRS1
–	**–**	**1.359**		**99787**	**Redi-Sleeve**
229,67	*230,00*	*13,00*	*S*	*200X230X13★	32
9.042	9.055	.512			
230,00	*230,20*	*15,00*	*V*	*200X230X15V★	32
9.055	9.063	.591			
230,00	*230,35*	*15,00*	*S*	200X230X15★	32
9.055	9.069	.591			
234,67	*235,00*	*15,00*	*S*	*200X235X15★	32
9.239	9.252	.591			
239,67	*240,00*	*15,00*	*S*	*200X240X15★	32
9.436	9.449	.591			

For Illustration and Material Data See Technical Section

Designed For A Specific Application - Not Recommended For General Use ⬅ Hydrodynamic Lip Design-CCW

* The U.S. customer service number is 877-4-TIMKEN. The Canadian customer service numbers are 800-565-4927 (English) and 800-565-0438 (French-Canadian). ★ Metric Seal

Hsg. Bore	Seal O.D.	Seal Width	Lip Mat'l	Part No.	Type/ Illus.
200,00mm (7.874") SHAFT (cont.)					
239,67	*240,00*	*20,00*	*S*	*200X240X20★	32
9.436	9.449	.787			
249,67	*250,00*	*16,00*	*S*	*200X250X16★	32
9.830	9.843	.630			
249,67	*250,00*	*20,00*	*S*	*200X250X20★	32
9.830	9.843	.787			
7.875" SHAFT					
9.000	9.010	.750	S	*455397	45
9.250	9.258	1.000	S	*417657	41
9.375	**9.383**	**.750**	**S**	**455121**	**45**
9.375	9.383	.750	N	*455121N	45
9.375	9.383	.750	V	455121V	45
10.000	10.008	.625	S	417016	41
10.000	10.008	.750	S	*417114	41
10.234	10.242	.605	S	*370151A	06
7.908" SHAFT					
–	–	–	S	801990	VRS1
–	–	–	S	801991	VRS2
–	–	–	S	802000	VRS1
9.528	9.535	.960	S	*3776S	#
7.927" SHAFT					
–	–	–	S	801990	VRS1
–	–	–	S	801991	VRS2
–	–	–	S	802000	VRS1
9.174	9.182	.687	S	*8228	#
7.937" (7-15/16") SHAFT					
–	–	–	S	801990	VRS1
–	–	–	S	801991	VRS2
–	–	–	S	802000	VRS1
–	**–**	**1.000**		***99799**	**Redi-Sleeve**
8.750	8.757	.565	S	417817	41
7.995" SHAFT					
–	–	–	S	801990	VRS1
–	–	–	S	801991	VRS2
–	–	–	S	802000	VRS1
–	**–**	**1.000**		***99800**	**Redi-Sleeve**
10.000	10.010	.750	S	*416403	41
11.625	11.633	1.078	S	8724S	41
8.000" SHAFT					
–	–	–	S	801990	VRS1
–	–	–	S	801991	VRS2
–	–	–	S	802000	VRS1
–	**–**	**1.000**		***99800**	**Redi-Sleeve**
9.000	9.010	.750	S	415656	41
9.250	**9.258**	**.625**	**S**	**417600**	**41**
9.250	9.260	.750	S	*415299	41
9.250	9.260	.750	S	*455299	45
9.500	**9.508**	**.625**	**S**	**417601**	**41**
9.500	9.508	.860	S	*3624	#
9.500	9.510	.750	S	*415300	41
9.500	9.510	.750	N	*415300N	41
9.500	9.510	.750	S	*455300	45
10.000	**10.008**	**.625**	**S**	**417602**	**41**
10.000	10.008	.625	N	*417602N	41
10.000	10.008	.750	S	*415122	41
10.000	10.008	.750	S	*455122	45
10.000	10.008	1.145	S	*396440	#
10.125	10.133	.750	S	415052	41
11.624	11.632	.750	S	7131	#

Hsg. Bore	Seal O.D.	Seal Width	Lip Mat'l	Part No.	Type/ Illus.
205,00mm (8.071") SHAFT					
224,67	*225,00*	*18,00*	*S*	*205X225X18★	32
8.845	8.858	.709			
234,67	*235,00*	*18,00*	*S*	*205X235X18★	32
9.239	9.252	.709			
8.125" (8-1/8") SHAFT					
–	–	–	S	801990	VRS1
–	–	–	S	801991	VRS2
–	–	–	S	802000	VRS1
8.750	8.757	.375	S	*256656	25
9.371	9.379	.425	S	*3594	#
9.375	9.379	.750	S	*455944	45
10.125	**10.130**	**.750**	**S**	**455123**	**45**
8.250" (8-1/4") SHAFT					
–	–	–	S	801990	VRS1
–	–	–	S	801991	VRS2
–	–	–	S	802000	VRS1
9.250	9.258	.625	S	455475	45
9.500	9.509	.625	V	458009V	45
10.250	**10.260**	**.750**	**S**	**415124**	**41**
10.625	**10.633**	**.750**	**S**	**416951**	**41**
11.500	11.507	.750	S	416422	41
11.500	11.507	.750	N	*416422N	41
210,00mm (8.268") SHAFT					
–	–	–	S	801990	VRS1
–	–	–	S	801991	VRS2
–	–	–	S	802000	VRS1
240,00	*240,35*	*15,00*	*S*	210X240X15★	35
9.449	9.463	.591			
249,67	*250,00*	*16,00*	*S*	*210X250X16★	32
9.830	9.843	.630			
250,00	*250,20*	*15,00*	*S*	210X250X15★	32
9.843	9.850	.591			
269,67	*270,00*	*16,00*	*S*	*210X270X16★	32
10.617	10.630	.630			
8.345" SHAFT					
–	–	–	S	802200	VRS1
10.750	10.758	1.125	S	*396412	#
8.375" (8-3/8") SHAFT					
–	–	–	S	802200	VRS1
10.375	**10.385**	**.625**	**S**	**417022**	**41**
8.500" (8-1/2") SHAFT					
–	–	–	S	802200	VRS1
9.500	9.509	.625	V	455828V	45
10.000	**10.008**	**.625**	**S**	**417603**	**41**
10.000	10.010	.687	S	*456554	45
10.000	10.010	.750	S	*415489	41
10.000	10.010	.750	V	*415489V	41
10.000	10.010	.750	S	*455489	45
10.000	10.010	.750	H	*455489H	45
10.500	**10.508**	**.625**	**S**	**417604**	**41**
10.500	10.510	.750	S	*455126	45
10.500	10.510	.750	H	*455126H	45
10.625	**10.633**	**.750**	**S**	**416394**	**41**
8.625" (8-5/8") SHAFT					
–	–	–	S	802200	VRS1
9.778	9.786	.625	S	*256616	25
10.625	**10.635**	**.750**	**S**	**417567**	**41**

SIZE SECTION

For Illustration and Material Data See Technical Section
Designed For A Specific Application - Not Recommended For General Use
* The U.S. customer service number is 877-4-TIMKEN. The Canadian customer service numbers are 800-565-4927 (English) and 800-565-0438 (French-Canadian). ★ Metric Seal

Hsg. Bore	Seal O.D.	Seal Width	Lip Mat'l	Part No.	Type/ Illus.
220,00mm (8.661") SHAFT					
–	–	–	S	802200	VRS1
250,00	*250,20*	*15,00*	*V*	*220X250X15V★	35
9.843	9.850	.591			
250,00	*250,35*	*15,00*	*S*	220X250X15★	32
9.843	9.856	.591			
254,67	*255,00*	*16,00*	*S*	*220X255X16★	32
10.026	10.039	.630			
259,67	*260,00*	*14,00*	*S*	*220X260X14★	32
10.223	10.236	.551			
259,67	*260,00*	*16,00*	*S*	*220X260X16★	32
10.223	10.236	.630			
260,00	*260,20*	*15,00*	*S*	*220X260X15★	32
10.236	10.244	.591			
222,00mm (8.740") SHAFT					
244,67	*245,00*	*13,00*	*S*	*222X245X13★	32
9.633	9.646	.512			
8.750" (8-3/4") SHAFT					
–	–	–	S	802200	VRS1
10.250	10.260	.688	S	*486642	48
10.250	10.260	.688	H	*486642H	48
10.500	10.510	.750	S	455966	45
10.750	**10.758**	**.750**	**S**	**415128**	**41**
10.750	10.758	.750	S	*455128	45
8.875" (8-7/8") SHAFT					
–	–	–	S	802200	VRS1
10.122	**10.130**	**.750**	**S**	**416657**	**41**
10.125	10.130	.750	S	*455930	45
10.875	10.885	.750	S	455129	45
9.000" SHAFT					
–	–	–	S	802200	VRS1
10.000	**10.010**	**.750**	**S**	**55301S**	**45**
10.000	10.010	.750	S	455301	45
10.088	10.095	.625	S	417940	41
10.250	10.260	.750	S	455476	45
10.375	**10.384**	**.625**	**S**	**456462**	**45**
10.376	10.384	.625	S	2791	33
10.500	**10.510**	**.750**	**S**	**455462**	**45**
11.000	**11.008**	**.750**	**S**	**415090**	**41**
11.000	11.008	.750	S	*455090	45
9.052" SHAFT					
–	–	–	S	802200	VRS1
10.709	10.720	.625	T	39893⬅	FW-H
10.709	10.720	.625	T	39894➡	FW-H
230,00mm (9.055") SHAFT					
–	–	–	S	802200	VRS1
260,00	*260,35*	*15,00*	*S*	230X260X15★	35
10.236	10.250	.591			
9.086" SHAFT					
–	–	–	S	802200	VRS1
11.004	11.016	.371	S	*9843	#
9.125" (9-1/8") SHAFT					
–	–	–	S	802200	VRS1
10.377	10.384	.625	S	*415352	41
233,00mm (9.173") SHAFT					
–	–	–	S	802200	VRS1
272,00	*272,26*	*15,88*	*V*	*3689★	#
10.709	10.719	.625			
233,00mm (9.173") SHAFT (cont.)					
9.250" (9-1/4") SHAFT					
–	–	–	S	802200	VRS1
–	–	–	S	802500	VRS1
–	–	–	S	802502	VRS3
10.250	10.258	.500	N	337426N	33
11.000	11.008	.750	S	416257	41
11.000	11.008	.750	H	*416257H	41
11.250	**11.260**	**.750**	**S**	**415219**	**41**
11.250	11.260	.750	N	*415219N	41
11.500	11.508	.750	S	*416798	41
12.750	12.758	1.125	S	*8996S	70
9.375" (9-3/8") SHAFT					
–	–	–	S	802500	VRS1
–	–	–	S	802502	VRS3
11.273	11.273	.825	S	*3503%	#
11.375	11.385	.750	S	415871	41
11.375	11.385	.750	H	*415871H	41
11.375	11.385	.750	S	*455871	45
11.375	11.385	.750	N	*455871N	45
11.375	11.385	.750	V	*455871V	45
12.750	12.758	1.250	S	*417018	41
9.437" (9-7/16") SHAFT					
–	–	–	S	802500	VRS1
–	–	–	S	802502	VRS3
10.630	10.640	.750	S	*455596	45
10.630	10.640	.750	H	*455596H	45
240,00mm (9.449") SHAFT					
–	–	–	S	802500	VRS1
–	–	–	S	802502	VRS3
270,00	*270,35*	*15,00*	*S*	240X270X15★	35
10.630	10.644	.591			
270,00	*270,35*	*16,00*	*S*	*240X270X16★	35
10.630	10.644	.630			
279,67	*280,00*	*18,00*	*S*	*240X280X18★	32
11.011	11.024	.709			
279,67	*280,00*	*20,00*	*S*	*240X280X20★	32
11.011	11.024	.787			
280,00	*280,20*	*16,00*	*S*	240X280X16★	32
11.024	11.031	.630			
9.466" SHAFT					
–	–	–	S	802500	VRS1
–	–	–	S	802502	VRS3
10.875	10.891	.375	S	710800	230
9.477" SHAFT					
–	–	–	S	802500	VRS1
–	–	–	S	802502	VRS3
11.375	11.383	.750	S	*3502	45
9.500" (9-1/2") SHAFT					
–	–	–	S	802500	VRS1
–	–	–	S	802502	VRS3
11.500	**11.508**	**.625**	**S**	**417606**	**41**
11.500	11.508	.625	V	*417606V	41
11.500	11.510	.750	S	*417374	41
12.499	12.509	.687	S	9555S	41

For Illustration and Material Data See Technical Section

Designed For A Specific Application - Not Recommended For General Use ➡ Hydrodynamic Lip Design-CW ⬅ Hydrodynamic Lip Design-CCW % External Bore

* The U.S. customer service number is 877-4-TIMKEN. The Canadian customer service numbers are 800-565-4927 (English) and 800-565-0438 (French-Canadian). ★ Metric Seal

Hsg. Bore	Seal O.D.	Seal Width	Lip Mat'l	Part No.	Type/ Illus.
9.620" SHAFT					
–	–	–	S	802500	VRS1
–	–	–	S	802502	VRS3
12.750	12.758	1.250	V	*416381V	41
9.625" (9-5/8") SHAFT					
–	–	–	S	802500	VRS1
–	–	–	S	802502	VRS3
12.750	**12.758**	**1.250**	**S**	**416381**	**41**
9.750" (9-3/4") SHAFT					
–	–	–	S	802500	VRS1
–	–	–	S	802502	VRS3
11.250	11.260	.750	S	55078S	5S
250,00mm (9.843") SHAFT					
–	–	–	S	802500	VRS1
–	–	–	S	802502	VRS3
280,00	*280,35*	*15,00*	*S*	*250X280X15★	35
11.024	11.037	.591			
289,67	*290,00*	*15,00*	*S*	*250X290X15★	32
11.404	11.417	.591			
9.910" SHAFT					
–	–	–	S	802500	VRS1
–	–	–	S	802502	VRS3
10.995	11.005	.625	S	417939	41
10.997	11.005	.625	S	2792	33
10.997	11.005	.625	S	456464	45
10.000" SHAFT					
–	–	–	S	802500	VRS1
–	–	–	S	802502	VRS3
11.000	**11.008**	**.625**	**S**	**417605**	**41**
11.000	11.010	.750	S	*415270	41
11.000	11.010	.750	S	*455270	45
11.000	11.010	.750	N	*455270N	45
11.000	11.010	.750	V	*455270V	45
11.250	11.260	.750	S	*456483	45
11.500	11.508	.750	V	457096V	45
12.000	**12.008**	**.625**	**S**	**417020**	**41**
260,00mm (10.236") SHAFT					
–	–	–	S	802500	VRS1
–	–	–	S	802502	VRS3
289,67	*290,00*	*15,00*	*S*	*260X290X15★	32
11.404	11.417	.591			
300,00	*300,45*	*20,00*	*S*	*260X300X20★	32
11.811	11.829	.787			
10.250" (10-1/4") SHAFT					
–	–	–	S	802500	VRS1
–	–	–	S	802502	VRS3
12.250	**12.260**	**.750**	**S**	**417570**	**41**
265,00mm (10.433") SHAFT					
289,67	*290,00*	*16,00*	*S*	*265X290X16★	32
11.404	11.417	.630			
10.500" (10-1/2") SHAFT					
–	–	–	S	802750	VRS1
–	–	–	S	802752	VRS3
12.000	12.008	.625	S	457997	45
12.500	12.508	.625	S	*417756	41
12.500	**12.508**	**1.000**	**S**	**415227**	**41**
12.500	12.508	1.000	V	*415227V	41
10.500" (10-1/2") SHAFT (cont.)					
12.500	12.508	1.234	S	*7564	39
13.375	13.383	.750	S	*417607	41
13.375	13.383	1.250	S	*417116	41
10.625" (10-5/8") SHAFT					
–	–	–	S	802750	VRS1
–	–	–	S	802752	VRS3
12.500	12.508	.625	S	*417641	41
13.000	13.008	.750	S	*416100	41
270,00mm (10.630") SHAFT					
–	–	–	S	802750	VRS1
–	–	–	S	802752	VRS3
12.000	12.812	.371	S	*9063	#
310,00	*310,45*	*16,00*	*S*	*270X310X16★	35
12.205	12.222	.630			
10.750" (10-3/4") SHAFT					
–	–	–	S	802750	VRS1
–	–	–	S	802752	VRS3
13.374	**13.381**	**1.250**	**S**	**416383**	**41**
10.820" SHAFT					
–	–	–	S	802750	VRS1
–	–	–	S	802752	VRS3
12.000	12.015	.590	S	*4766S	#
11.000" SHAFT					
–	–	–	S	802750	VRS1
–	–	–	S	802752	VRS3
12.500	**12.510**	**.625**	**S**	**417571**	**41**
12.500	12.514	1.250	S	*476262	47
12.500	12.514	1.250	N	*476262N	47
13.000	**13.010**	**.750**	**S**	**415482**	**41**
11.006" SHAFT					
–	–	–	S	802750	VRS1
–	–	–	S	802752	VRS3
12.875	12.891	.625	S	710925	230
280,00mm (11.024") SHAFT					
–	–	–	S	802750	VRS1
–	–	–	S	802752	VRS3
320,00	*320,45*	*20,00*	*S*	280X320X20★	32
12.598	12.616	.787			
11.220" SHAFT					
–	–	–	S	802750	VRS1
–	–	–	S	802752	VRS3
12.250	12.260	.945	T	39899⬅	#
12.250	12.260	.945	T	39900➡	#
285,00mm (11.220") SHAFT					
319,67	*320,00*	*20,00*	*S*	*285X320X20★	32
12.585	12.598	.787			
290,00mm (11.417") SHAFT					
329,67	*330,00*	*18,00*	*S*	*290X330X18★	32
12.979	12.992	.709			
11.500" (11-1/2") SHAFT					
–	–	–	S	803000	VRS1
–	–	–	S	803002	VRS3

For Illustration and Material Data See Technical Section

Designed For A Specific Application - Not Recommended For General Use ➡ Hydrodynamic Lip Design-CW ⬅ Hydrodynamic Lip Design-CCW

* The U.S. customer service number is 877-4-TIMKEN. The Canadian customer service numbers are 800-565-4927 (English) and 800-565-0438 (French-Canadian). ★ Metric Seal

Hsg. Bore	Seal O.D.	Seal Width	Lip Mat'l	Part No.	Type/ Illus.
11.500" (11-1/2") SHAFT (cont.)					
12.495	12.535	.250	S	*7387	#
13.000	**13.010**	**.750**	**S**	**415077**	**41**
13.500	**13.508**	**.750**	**S**	**415076**	**41**
13.500	13.508	.750	V	*415076V	41
11.586" SHAFT					
–	–	–	S	803000	VRS1
–	–	–	S	803002	VRS3
13.687	13.703	.562	S	711000	230
300,00mm (11.811") SHAFT					
–	–	–	S	803000	VRS1
–	–	–	S	803002	VRS3
340,00	*340,45*	*20,00*	*S*	300X340X20★	32
13.386	13.404	.787			
12.000" SHAFT					
–	–	–	S	803000	VRS1
–	–	–	S	803002	VRS3
13.500	13.508	.750	S	*457704	45
14.000	**14.010**	**.750**	**S**	**417608**	**41**
14.000	14.010	1.000	S	*7972S	45
320,00mm (12.598") SHAFT					
–	–	–	V	803254	VRS1
360,00	*360,45*	*20,00*	*S*	*320X360X20★	32
14.173	14.191	.787			
12.750" (12-3/4") SHAFT					
–	–	–	V	803254	VRS1
13.625	13.635	.562	S	*325940	32
13.000" SHAFT					
–	–	–	V	803254	VRS1
15.000	15.008	.750	S	*415648	41
340,00mm (13.386") SHAFT					
–	–	–	S	803502	VRS3
380,00	*380,45*	*20,00*	*S*	*340X380X20★	32
14.961	14.978	.787			
13.797" SHAFT					
–	–	–	S	803502	VRS3
15.500	15.516	.437	S	711200	230
360,00mm (14.173") SHAFT					
–	–	–	S	803502	VRS3
400,00	*400,45*	*20,00*	*S*	*360X400X20★	32
15.748	15.766	.787			
380,00mm (14.961") SHAFT					
–	–	–	S	803750	VRS1
420,00	*420,45*	*20,00*	*S*	*380X420X20★	32
16.535	16.553	.787			
400,00mm (15.748") SHAFT					
–	–	–	S	804000	VRS1
440,00	*440,45*	*20,00*	*S*	*400X440X20★	32
17.323	17.341	.787			
16.250" SHAFT					
–	–	–	S	804000	VRS1
16.250" SHAFT (cont.)					
18.000	18.010	.750	S	*4273	#
18.000	18.010	.750	S	55103S	45

For Illustration and Material Data See Technical Section
Designed For A Specific Application - Not Recommended For General Use
* The U.S. customer service number is 877-4-TIMKEN. The Canadian customer service numbers are 800-565-4927 (English) and 800-565-0438 (French-Canadian). ★ Metric Seal

PLAIN ROUND FELTS

Shaft	O.D.	Width	Lip Mat'l	Part No.	Shaft	O.D.	Width	Lip Mat'l	Part No.
.938	1.500	.375	F	5MR1300	2.500	3.438	.313	F	5M89
1.750	2.438	.313	F	5M445	2.813	3.563	.313	F	5M559
1.938	2.875	.375	F	5M81	2.937	3.812	.313	F	5MR1009
1.938	3.000	.375	F	5M293	3.250	4.063	.313	F	5M643
2.000	2.750	.438	F	5M289	3.344	3.875	.281	F	5MR1301
2.000	3.125	.375	F	5M356	4.875	5.625	.375	F	5M544
2.000	3.125	.500	F	5M403	6.438	7.563	.500	F	5M466

For Illustration and Material Data see Technical Section

SEAL KITS

Kit Dimensions						Seal Dimensions								
Shaft	O.D.	Width	Bolt Holes	Kit No.	Type/ Illus.	Seal No.	Type/ Illus.	Lip Mat'l	Shaft	O.D.	Bolt Holes	Width	Remarks
–	–	–	–	**5068**	#	–	–	–	–	–	–	–	(Split Seal)
–	–	–	–	**5073**	#	–	–	–	–	–	–	–	Contains (2) G753 Gasket
–	–	–	–	**5106**	#	–	–	–	–	–	–	–	Split Seal
–	–	–	–	**5111**	#	–	–	–	–	–	–	–	(Split Seal)
–	–	–	–	**5112**	#	–	–	–	–	–	–	–	(Split Seal)
–	–	–	–	**5118**	#	–	–	–	–	–	–	–	(Split Seal)
–	–	–	–	**5682**	#	–	–	–	–	–	–	–	
–	–	–	–	**5685**	35	–	–	–	–	–	–	–	
–	–	–	–	**5686**	35	–	–	–	–	–	–	–	(Kit)
–	–	–	–	**5690**	*	–	–	–	–	–	–	–	(Repair Kit)
–	–	–	–	**5694**	35	•**1884**	32	S	2.047	2.688	–	.394	(Kit)
						•**4899**	66	S	2.205	2.958	–	.256	
						722111	–	–	–	–	–	–	
–	–	–	–	**5700**	35	–	–	–	–	–	–	–	(Kit)
–	3.030	.325	–	**5092**	#	–	–	–	–	–	–	–	(Split Seal)
–	4.000	.187	–	**5116**	#	–	–	–	–	–	–	–	(Split Seal)
–	4.200	.222	–	**5108**	#	–	–	–	–	–	–	–	(Split Seal)
–	4.862	.410	–	*** 5479**	#	–	–	–	–	–	–	–	Contains (2) • G196 Gasket & (2) • G214 Gasket
–	4.875	.410	–	**5596**	#	–	–	–	–	–	–	–	Contains (2) • G196 Gasket & (2) • G456 Gasket
–	4.875	.455	–	**5476**	#	–	–	–	–	–	–	–	Contains (2) • G211 Gasket
–	5.625	.430	–	**5414**	#	–	–	–	–	–	–	–	Contains (2) • G129 Gasket &• G130 Gasket &• G131 Gasket
–	5.700	.415	–	*** 5576**	#	–	–	–	–	–	–	–	Contains (2) • G427 Gasket
–	5.700	.415	–	**5650**	#	–	–	–	–	–	–	–	
–	6.240	.400	–	**5591**	#	–	–	–	–	–	–	–	Contains (2) • G462 Gasket & (2) • G463 Gasket
–	6.600	.430	–	**5390**	#	–	–	–	–	–	–	–	Contains (2) • G214 Gasket & (2) • G594 Gasket
–	6.906	.440	–	**5419**	#	–	–	–	–	–	–	–	Contains (2) • G137 Gasket
1.062	1.507	.250	–	**5346**	34	•**340210**	34	S	1.062	1.507	–	.250	Contains (2) • 666215 'O' Ring &• 666232 'O' Ring &• 666334 'O' Ring
1.062	2.129	.625	–	**5168**	41	•**413293**	41	S	1.187	2.129	–	.375	Contains• JV1872 Wear Sleeve
1.172	1.832	.422	–	**5462**	33	•**6370N**	33	N	1.299	1.832	–	.375	Contains• J712 Wear Sleeve
1.250	1.756	–	–	**PSK-1**	A	**SR2**	–	–	–	–	–	–	(Kit)
						(2) **SW2**	–	–	–	–	–	–	
						5683++	32	S	1.250	1.756	–	.300	
						5684++	32	S	1.250	1.756	–	.399	
1.250	2.254	.750	–	**5166**	41	•**410169**	41	S	1.375	2.254	–	.500	Contains• JV1873 Wear Sleeve
1.376	2.254	1.370	–	**5204**	#	•**7495S**	61	S	1.375	2.254	–	.713	Contains• RP 691 Bushing (Seal & Bushing Kit)
1.438	2.192	.480	–	**5550**	47	•**9249**	47	S	1.437	2.192	–	.480	Contains• 623017 'O' Ring
1.493	2.507	.700	–	**5592**	39	•**8097**%	39	S	1.476	2.447	–	.620	Contains• JV970 Wear Sleeve
1.500	2.378	1.500	–	**5201**	41	•**470059**	47	S	1.500	2.378	–	.500	Contains• RP 605 Bushing (Seal & Bushing Kit)

Designed For A Specific Application - Not Recommended For General Use ++ Not Sold Separately % External Bore

* The U.S. customer service number is 877-4-TIMKEN. The Canadian customer service numbers are 800-565-4927 (English) and 800-565-0438 (French-Canadian).

• Sold Separately

Kit Dimensions						Seal Dimensions							
Shaft	O.D.	Width	Bolt Holes	Kit No.	Type/ Illus.	Seal No.	Type/ Illus.	Lip Mat'l	Shaft	O.D.	Bolt Holes	Width	Remarks
1.500	2.378	1.500	–	**5202**	#	•**7692S**⬅	79	S	1.500	2.376	–	1.458	Contains• RP 605 Bushing (Seal & Bushing Kit)
1.500	2.570	.550	–	**5071**	200	•**200861**%	200E	S	1.500	2.482	–	.290	Contains• JV933 Wear Sleeve
1.502	2.381	.940	–	**5200**	#	•**9613S**⬅	71	S	1.500	2.381	–	.470	Contains• RP 356 Bushing (Seal & Bushing Kit)
1.562	2.506	.500	–	**5331**	45	•**450185**	45	S	1.562	2.506	–	.500	Contains• G199 Gasket
1.566	2.515	1.370	–	**5207**	#	•**8935S**&	79	S	1.558	2.254	–	1.520	Contains• RP 553 Bushing (Seal & Bushing Kit)
1.688	2.687	1.240	–	**5205**	41	•**7038SA**⬅	41	S	1.687	2.506	–	.582	Contains RP 717 Bushing (Seal & Bushing Kit)
1.688	2.850	2.120	–	**5206**	#	•**7300S**⬅	79	N	1.685	2.506	–	1.250	Contains• RP 546 Bushing (Seal & Bushing Kit)
1.689	2.850	2.120	–	**5203**	#	•**7300S**⬅	79	N	1.685	2.506	–	1.250	Contains• RP 661 Bushing (Seal & Bushing Kit)
1.750	3.376	.667	–	**5302**	39	•**8398**	39	S	1.937	3.376	–	.667	Contains• K259 Wiper
1.763	2.416	.563	–	**5000**	35	–	–	–	–	–	–	–	
1.766	3.005	.875	–	**5364**	45	•**451139**	45	S	1.875	3.005	–	.375	Contains• JX825 Wear Sleeve
1.812	2.879	.718	–	**5531**	41	•**410295**	41	S	1.937	2.879	–	.468	Contains• JV1464 Wear Sleeve
1.875	2.565	.563	–	**5001**	35	–	–	–	–	–	–	–	
1.875	2.627	.843	–	**5599**	47	•**470455**	47	S	1.937	2.627	–	.500	Contains• J990 Wear Sleeve
1.875	2.690	.625	–	**5388**	45	**450360**	45	S	2.000	2.690	–	.500	Contains• J1107 Wear Sleeve
1.875	2.762	.500	–	**5336**	41	•**410283**	41	S	1.875	2.762	–	.500	Contains• G736 Gasket
1.875	2.808	.433	–	**5699**	#	**4310**	285	S	1.875	2.808	–	.433	Contains• AS232 'O' Ring
1.875	3.130	.625	–	**5361**	45	•**450310N**	45	N	2.000	3.130	–	.500	Contains• J1107 Wear Sleeve
1.875	3.150	.315	–	**5697**	#	**4051**	#	S	1.875	2.907	–	.315	Contains• AS232 'O' Ring
1.875	4.812	.312	12	**5594**	#	•**7105S**	#	S	1.875	4.812	12	.312	Contains (2) • G196 Gasket & (2) • G456 Gasket
1.880	2.414	.250	–	**5458**	35	•**6910S**	35	S	1.880	2.414	–	.250	Contains• 610101 'O' Ring
1.887	1.998	1.000	–	**5208**	#	•**9449**⬅	74	S	1.890	2.704	–	.582	Contains RP775 Bushing (Seal & Bushing Kit)
1.915	2.548	.250	–	**5499**	#	•**7020**	#	S	1.915	2.548	–	.250	Contains• 610105 'O' Ring
1.915	2.548	.250	–	**5573**	#	•**7020**	#	S	1.915	2.548	–	.250	Contains• 610145 'O' Ring
2.000	3.376	.625	–	**5161**	41	•**410972**	41	S	2.125	3.376	–	.468	Contains• J1109 Wear Sleeve &• JV1837 Wear Sleeve
2.000	3.376	.625	–	**5188**	41	•**410972N**	41	N	2.125	3.376	–	.468	Contains• J1109 Wear Sleeve &• JV1837 Wear Sleeve
2.000	4.562	.562	7	**5329**	#	**6465B**++	#	F	2.000	4.562	7	.562	Contains (2) G33 Gasket
2.000	4.562	.562	7	**5330**	#	•**6469**	#	F	2.000	4.562	7	.562	Contains (2) • G34 Gasket
2.000	5.880	.448	8	**5487**	#	–	–	–	–	–	–	–	Contains (2) • G221 Gasket &• K251 Wiper
2.000	5.880	.458	8	*5172	50	•**6959**	#	S	2.375	5.880	8	.331	Contains• K251 Wiper &• G895A Gasket
2.010	2.965	.318	–	**5695**	#	•**SK1**++	#	S	2.030	2.601	–	.295	Contains• SK3 Wear Sleeve (Kit)
						•**SK2**++	#	S	2.010	2.876	–	.318	
2.047	2.964	.315	–	**5696**	35	•**1993**	47	S	2.205	2.885	–	.492	(Kit)
						•**4898**	66	S	2.047	2.603	–	.295	
						722110	–	–	–	–	–	–	
2.120	3.505	.750	–	**5521**	41	•**415093**	41	S	2.250	3.505	–	.500	Contains• JV1456 Wear Sleeve
2.121	3.350	.500	–	**5397**	#	•**9434**%	46	S	2.121	3.296	–	.460	
						•**482435**	48	S	2.172	3.350	–	.500	
2.125	3.072	.433	–	**5604**	A	•**3948**	#	S	2.201	2.741	–	.197	Contains• JV2019 Wear Sleeve
2.129	2.766	.250	–	**5488**	48	•**6957**	48	N	2.129	2.766	–	.250	Contains• 610123 'O' Ring
2.129	2.766	.250	–	**5589**	48	•**6957**	48	N	2.129	2.766	–	.250	Contains• 666151 'O' Ring
2.187	3.194	.437	–	**5332**	45	**450354**	45	S	2.187	3.194	–	.437	Contains• G25 Gasket
2.250	3.256	.625	–	**5160**	41	•**412038**	41	S	2.375	3.256	–	.437	Contains• J1113 Wear Sleeve &• JV1836 Wear Sleeve
2.250	3.256	.625	–	**5189**	41	•**412038N**	41	N	2.375	3.256	–	.437	Contains• J1113 Wear Sleeve &• JV1836 Wear Sleeve
2.340	3.355	.650	–	**5666**	#	•**3501V**	69	V	2.420	3.355	–	.375	Contains• JX1966 Wear Sleeve
2.375	3.433	1.000	–	**5602**	47	•**473274N**	47	N	2.500	3.433	–	.375	Contains• JV1802 Wear Sleeve
2.375	4.943	1.000	–	**5603**	47	•**3136N**⬅➡	47	N	2.500	4.943	–	.500	Contains• JV1802 Wear Sleeve
2.377	3.505	.937	–	**5066**	48	•**3894V**	48	V	2.500	3.505	–	.500	Contains• JX1920 Wear Sleeve Seal & Sleeve
2.420	3.558	.336	–	**5698**	#	**4185**	#	S	2.420	3.558	–	.336	Contains• AS043 'O' Ring
2.430	3.031	.380	–	**5567**	#	–	–	–	–	–	–	–	
2.432	3.756	.750	–	*5520	41	•**415244**	41	S	2.562	3.756	–	.500	Contains• JV1455 Wear Sleeve
2.496	3.758	.625	–	**5045**	200	•**200851**%	200E	S	2.496	3.772	–	.315	Contains• JV1582 Wear Sleeve
2.500	6.125	.435	8	**5401**	50	•**7512S**	51	S	2.500	6.125	8	.400	Contains (2) • G41 Gasket &• G43 Gasket &• JV1304 Wear Sleeve
2.531	6.125	.500	–	**5384**	#	•**7154S**	#	S	2.531	6.125	–	.500	Contains• G41 Gasket
2.562	8.250	1.003	8	**5406**	51	•**6481N**	–	–	–	–	–	–	Contains• G40 Gasket &• K282 Wiper
2.625	3.480	.380	–	**5072**	#	–	–	–	–	–	–	–	
2.625	3.755	.625	–	**5147**	200	•**200919**%	200E	S	2.625	3.960	–	.320	Contains• JV1517 Wear Sleeve
2.750	3.881	1.000	–	**5584**	41	•**415479N**	41	N	3.000	3.881	–	.468	Contains• K198 Wiper
2.812	4.504	1.000	–	**5399**	41	•**415356**	41	S	2.937	4.504	–	.468	Contains• JV1427 Wear Sleeve
2.835	3.425	.230	–	**5163**	#	–	–	–	–	–	–	–	

Designed For A Specific Application - Not Recommended For General Use ⬅ Hydrodynamic Lip Design-CCW ⬅➡ Hydrodynamic Lip Design-Bidirectional
++ Not Sold Separately % External Bore & Flanged O.D.
* The U.S. customer service number is 877-4-TIMKEN. The Canadian customer service numbers are 800-565-4927 (English) and 800-565-0438 (French-Canadian).
• Sold Separately

Kit Dimensions						Seal Dimensions							
Shaft	O.D.	Width	Bolt Holes	Kit No.	Type/ Illus.	Seal No.	Type/ Illus.	Lip Mat'l	Shaft	O.D.	Bolt Holes	Width	Remarks
2.860	6.562	.571	12	**5403**	50	•**6479**	#	S	2.860	6.460	12	.520	Contains• J493 Wear Sleeve
2.875	3.756	.625	–	**5601**	47	•**476023N**	47	N	3.000	3.756	–	.375	Contains• JV1120 Wear Sleeve
2.988	3.740	1.165	–	**5290**	#	–	–	–	–	–	–	–	
2.991	3.637	.385	–	**5273**	FW-H	•**100202T**⬅	FW-H	T	2.991	3.637	–	.385	(Teflon®)
3.000	4.008	.625	–	**5629**	45	•**457034**	45	V	3.125	4.008	–	.500	Contains• J1121 Wear Sleeve
3.000	4.008	.687	–	**5657**	45	•**457034**	45	V	3.125	4.008	–	.500	Contains• JX1747 Wear Sleeve
3.000	8.250	.531	15	**5452**	50	**6764S**	#	S	3.125	8.250	15	.500	Contains• G48 Gasket &• G167 Gasket &• J495 Wear Sleeve
3.010	8.150	.925	8	**5494**	#	•**6897**	#	S	3.125	8.250	8	.925	Contains (2) • G40 Gasket &• K156 Wiper
3.010	8.250	.571	10	**5015**	#	•**8369S**	#	S	3.125	–	–	.571	Contains• G48 Gasket &• JV495 Wear Sleeve & (2) • G523 Gasket
3.010	8.250	.571	10	**5313**	#	•**8369S**	#	S	3.125	–	–	.571	Contains• K282 Wiper & (2) • G523 Gasket
3.110	5.750	.375	8	**5079**	51	•**7896S**	51	S	3.110	5.750	8	.375	
3.112	4.633	.920	–	**5100**	#	•**9583**⬅➡	#	S	3.250	4.633	–	.706	Contains• JV1508 Wear Sleeve
3.119	4.130	.750	–	**5509**	25	•**255566H**	25	H	3.250	4.130	–	.500	Contains• J1401 Wear Sleeve
3.119	4.756	.875	–	**5518**	41	–	–	–	–	–	–	–	
3.124	8.250	.518	8	**5408**	50	•**6477S**	#	S	3.226	8.250	8	.518	Contains (2) • G40 Gasket &• G42 Gasket &• J873 Wear Sleeve
3.125	4.130	.625	–	**5120**	41	•**415566N**	41	N	3.250	4.130	–	.562	Contains• J1122 Wear Sleeve
3.125	4.130	1.000	–	**5578**	48	•**485500N**	48	N	3.298	4.130	–	.562	Contains• K179 Wiper
3.125	7.500	.625	12	**5405**	50	•**6480**	#	S	3.125	7.500	12	.531	Contains• G49 Gasket &• K282 Wiper
3.125	8.125	.571	7	**5410**	50	•**6505S**	#	S	3.125	8.125	7	.571	Contains• G48 Gasket & (2) • G54 Gasket &• JV495 Wear Sleeve
3.125	8.250	.571	8	**5185**	51	–	–	–	–	–	–	–	
3.250	4.008	.866	–	**5609**	5S	–	–	–	–	–	–	–	
3.250	4.254	.625	–	**5373**	A	•**416294N**	41	N	3.375	4.254	–	.500	Contains• J1123 Wear Sleeve
3.250	4.254	.625	–	**5382**	41	•**415613**	41	S	3.375	4.254	–	.625	Contains• J1123 Wear Sleeve
3.250	4.254	.750	–	**5169**	47	•**476028**	47	S	3.375	4.254	–	.468	Contains• JV1875 Wear Sleeve
3.250	4.572	.750	–	**5593**	200	•**200870**%	200E	S	3.249	4.488	–	.318	Contains• JV980 Wear Sleeve
3.250	5.004	.625	–	**5381**	41	•**415025**	41	S	3.375	5.004	–	.468	Contains• J1123 Wear Sleeve
3.375	4.380	.812	–	**5588**	39	•**8130**%	#	S	3.375	4.380	–	.730	Contains• JV976 Wear Sleeve
3.438	4.012	.410	–	**5095**	#	–	–	–	–	–	–	–	(Rope Type)
3.438	4.313	.188	–	**5117**	#	–	–	–	–	–	–	–	(Split Seal)
3.465	4.266	.437	–	**5287**	FW-H	•**100239T**⬅	FW-H	T	3.465	4.266	–	.437	Contains 732079 Gasket &• 733419 Gasket & 734280 Gasket (Teflon®)
3.500	5.256	.718	–	*5551	41	•**416335**	41	S	3.625	5.256	–	.468	Contains• JV1494 Wear Sleeve
3.500	6.625	.531	–	**5327**	#	•**6245S**	#	S	3.500	6.625	12	.531	Contains (2) • G35 Gasket
3.562	4.630	.700	–	**5347**	#	•**8480**	#	S	3.557	4.530	–	.320	Contains• JV1170 Wear Sleeve
3.562	5.125	.875	–	**5649**	#	•**9584**&	74	S	3.562	4.761	–	.550	Contains• JV1509 Wear Sleeve
3.562	5.256	.468	–	**5532**	41	•**416670**	41	S	3.687	5.256	–	.468	Contains• JV1469 Wear Sleeve
3.583	4.375	.394	–	**5279**	FW-H	•**100052T**⬅	FW-H	T	3.583	4.375	–	.394	Contains 731414 Gasket (Teflon®)
3.625	4.256	.390	–	**5277**	FW-H	•**100204T**⬅	FW-H	T	3.625	4.256	–	.390	(Teflon®)
3.625	4.756	.875	–	**5167**	47	•**475379**	47	S	3.750	4.756	–	.500	Contains• JV1874 Wear Sleeve
3.625	4.879	.585	–	**5453**	48	•**485497**	48	S	3.625	4.879	–	.585	Contains• 633013 'O' Ring Kit
3.740	4.540	.492	–	**5274**	FW-H	•**100203T**⬅	FW-H	T	3.740	4.540	–	.492	Contains 733215 Gasket (Teflon®)
3.750	4.506	.362	–	**5278**	FW-H	•**100205T**⬅	FW-H	T	3.750	4.506	–	.362	(Teflon®)
3.750	4.756	.625	–	**5084**	#	–	–	–	–	–	–	–	
3.865	6.102	.975	–	**5667**	#	•**4269**	74	S	4.000	5.700	–	.850	Contains• J2058 Wear Sleeve
3.868	5.506	.921	–	**5475**	25	•**6864S**	45	S	4.050	5.506	–	.671	Contains• J718 Wear Sleeve
3.930	5.381	.875	–	**5028**	#	•**9586**	#	S	4.062	5.378	–	.627	Contains• JV1511A Wear Sleeve
3.937	5.506	.859	–	**5465**	45	•**455037**	45	S	4.062	5.506	–	.562	Contains• JV1362 Wear Sleeve
3.937	5.506	.859	–	**5563**	25	•**6864S**	45	S	4.050	5.506	–	.671	Contains• JV1362 Wear Sleeve
3.937	5.509	.597	–	**5089**	#	•**2155**⬅➡	#	S	4.062	5.509	–	.597	Contains• JV1511 Wear Sleeve
3.937	5.678	.875	–	**5076**	#	•**9586**	#	S	4.062	5.378	–	.627	Contains• JV1511 Wear Sleeve
3.994	5.004	.718	–	**5526**	41	•**415134**	41	S	4.125	5.004	–	.468	Contains• JV1461 Wear Sleeve
3.994	5.005	.625	–	**5065**	45	•**455134H**	45	H	4.125	5.005	–	.468	Contains• J1129 Wear Sleeve
4.000	5.004	.625	–	**5376**	41	•**415134N**	41	N	4.125	5.004	–	.468	Contains• J1129 Wear Sleeve
4.000	5.004	.937	–	**5581**	#	•**7390**%	#	S	4.000	4.906	–	.821	Contains• JV943 Wear Sleeve
4.062	5.506	.875	–	**5170**	41	•**415039**	41	S	4.187	5.506	–	.562	Contains• JV1473 Wear Sleeve
4.062	6.000	.875	–	**5537**	41	•**416673**	41	S	4.187	6.007	–	.625	Contains• JV1473 Wear Sleeve
4.375	6.259	.843	–	**5077**	#	•**9587**&	#	S	4.500	6.257	–	.820	Contains• JV1512 Wear Sleeve
4.500	6.259	.862	–	**5075**	#	•**9588**&	#	S	4.625	6.257	–	.550	Contains• JV1513 Wear Sleeve
4.642	5.756	.750	–	**5008**	45	**455053**	45	S	4.750	5.757	–	.562	Contains• JX847 Wear Sleeve
4.646	5.756	.625	–	**5625**	48	•**485138**	48	S	4.750	5.756	–	.500	Contains• JX1386 Wear Sleeve
4.687	5.756	1.562	–	**5460**	45	•**455251H**	45	H	4.812	5.756	–	.562	Contains• JV729 Wear Sleeve
4.687	5.756	1.562	–	**5461**	7S	•**75251S**	7S	S	4.812	5.756	–	.750	Contains• J729 Wear Sleeve
4.687	7.635	.359	–	**5575**	#	•**6701**	#	S	4.740	7.575	6	.410	Contains JV608 Wear Sleeve
4.743	6.256	.812	–	**5527**	41	**415068**	41	S	4.875	6.256	–	.562	Contains• JV1462 Wear Sleeve
4.750	6.006	.750	–	*5010	47	•**476621H**	47	H	4.875	6.006	–	.562	Contains• J1135 Wear Sleeve
4.750	6.256	.750	–	**5377**	A	•**415068N**	41	N	4.875	6.256	–	.562	Contains• J1135 Wear Sleeve
4.759	6.316	1.250	–	**5481**	47	•**6872S**	47	S	5.500	6.316	–	1.250	Contains• JV753 Wear Sleeve
4.759	6.505	1.125	–	**5483**	43	•**6873S**	43	S	5.500	6.505	–	1.125	Contains• JV753 Wear Sleeve
4.759	7.004	1.250	–	**5495**	43	•**7006S**	43	S	5.500	7.004	–	1.250	Contains• JV753 Wear Sleeve
4.812	6.316	1.250	–	**5471**	47	•**6872S**	47	S	5.500	6.316	–	1.250	Contains• JV701 Wear Sleeve

Designed For A Specific Application - Not Recommended For General Use ⬅ Hydrodynamic Lip Design-CCW ⬅➡ Hydrodynamic Lip Design-Bidirectional % External Bore & Flanged O.D. * The U.S. customer service number is 877-4-TIMKEN. The Canadian customer service numbers are 800-565-4927 (English) and 800-565-0438 (French-Canadian).
• Sold Separately

Kit Dimensions						Seal Dimensions							
Shaft	O.D.	Width	Bolt Holes	Kit No.	Type/ Illus.	Seal No.	Type/ Illus.	Lip Mat'l	Shaft	O.D.	Bolt Holes	Width	Remarks
4.812	6.505	1.125	–	**5473**	43	•**6873S**	43	S	5.500	6.505	–	1.125	Contains• JV701 Wear Sleeve
4.812	7.004	1.250	–	**5472**	43	•**7006S**	43	S	5.500	7.004	–	1.250	Contains• JV701 Wear Sleeve
4.834	5.756	.710	–	**5033**	#	•**3492**	48	T	5.000	5.756	–	.500	Contains• JX2162 Wear Sleeve
4.841	5.756	.750	–	**5665**	#	•**3492V**	48	V	5.000	5.756	–	.500	Contains JX1967 Wear Sleeve
4.875	6.006	.715	–	**5643**	#	•**3782**	#	H	5.000	6.006	–	.500	Contains• J1606 Wear Sleeve
4.993	6.131	.750	–	**5229**	41	•**416172**	41	S	5.125	6.131	–	.562	Contains• J1137 Wear Sleeve
5.000	6.006	.717	–	**5722**	94	•**947090**⬅	94	T	5.125	6.006	–	.413	Contains• JL2370 Wear Sleeve
5.000	6.131	.875	–	**5199**	7H	•**8971H**	7S	H	5.125	6.131	–	.750	Contains• JX1831 Wear Sleeve
5.000	6.131	.875	–	**5624**	45	•**456557**	45	V	5.125	6.131	–	.500	Contains• JX1831 Wear Sleeve
5.179	6.513	1.380	–	**5424**	32	•**327984**⬅	32	T	5.312	6.513	–	.500	Contains• JF2280 Wear Sleeve
5.180	6.507	.750	–	***5082**	45	•**456986H**	45	H	5.312	6.507	–	.625	Contains• J2037 Wear Sleeve
5.187	6.513	1.380	–	**5422**	32	•**327984**⬅	32	T	5.312	6.513	–	.500	Contains• JF2280 Wear Sleeve
5.500	6.631	.875	–	**5146**	41	•**415487**	41	S	5.625	6.631	–	.625	Contains• JV1463 Wear Sleeve
5.625	6.632	1.000	–	**5383**	45	**455447**	45	S	5.750	6.632	–	.625	Contains• J1355 Wear Sleeve
5.875	7.008	.875	–	**5228**	45	•**456055V**	45	V	6.000	7.008	–	.625	Contains• JX1002 Wear Sleeve
5.991	6.757	.500	–	**5039**	#	•**4165V**⬅	#	V	6.107	6.757	–	.500	Contains• JV2088 Wear Sleeve
5.998	6.757	.675	–	**5645**	#	•**4165V**⬅	#	V	6.107	6.757	–	.500	Contains• J2051 Wear Sleeve
6.000	6.757	.750	–	**5026**	33	•**336665H**	33	H	6.125	6.757	–	.375	Contains• J1141 Wear Sleeve
6.079	7.336	.600	–	**5637**	#	•**2628**	64	H	6.204	7.336	–	.562	Contains• J1895 Wear Sleeve
6.079	7.336	.750	–	**5613**	#	•**2628**	64	H	6.204	7.336	–	.562	Contains• K458 Wiper &• J1842 Wear Sleeve
6.204	7.336	.812	–	***5634**	#	•**3807**	64	H	6.328	7.336	–	.500	Contains• J1825 Wear Sleeve
6.500	8.007	.750	–	**5436**	91	**914412**⬅	91	T	6.625	8.007	–	.750	Contains JG2361 Wear Sleeve
6.500	8.007	.750	–	**5441**	91	**914411**⬅	91	T	6.625	8.007	–	.750	Contains JL2361 Wear Sleeve
6.500	8.007	1.000	–	**5443**	91	**914413**➡	91	T	6.625	8.007	–	1.000	Contains JG2345 Wear Sleeve
6.875	8.382	.750	–	**5538**	41	•**416674**	41	S	7.000	8.382	–	.750	Contains• JV1474 Wear Sleeve
6.875	8.633	.825	–	**5164**	#	•**3123**	#	S	6.956	8.633	–	.750	
						•**3124**%	46	S	6.875	8.543	–	.825	
7.369	9.010	.875	–	**5276**	41	•**415551**	41	S	7.500	9.010	–	.750	Contains• JV1190 Wear Sleeve
7.908	9.508	.960	–	**5615**	#	•**3624**	#	S	8.000	9.508	–	.860	
						•**3776S**	#	S	7.908	9.535	–	.960	
9.057	10.719	1.000	–	**5632**	#	•**3689**	#	V	9.173	10.719	–	.625	Contains• J1984 Wear Sleeve
9.265	11.385	.990	–	**5175**	45	•**455871V**	45	V	9.375	11.385	–	.750	Contains• JV829 Wear Sleeve
9.375	11.383	.825	–	**5227**	#	•**3502**	45	S	9.477	11.383	–	.750	
						•**3503**%	#	S	9.375	11.273	–	.825	

Designed For A Specific Application - Not Recommended For General Use ➡ Hydrodynamic Lip Design-CW ⬅ Hydrodynamic Lip Design-CCW % External Bore

* The U.S. customer service number is 877-4-TIMKEN. The Canadian customer service numbers are 800-565-4927 (English) and 800-565-0438 (French-Canadian).

• Sold Separately

Shaft	I.D.	Eff. Shaft Dia.	Flanged O.D.	Width	Type Illus.	Part No.
–	–	2.515	2.855	.510	#	**JV1931**
5.000	–	5.125	–	.717	19	**JL2370**
.750	.745	.875	–	.500	19	**J1594**
.750	.745	.875	–	.500	19	**JV1594**
.875	.869	.999	–	.562	19	**J1267**
.875	.869	.999	–	.562	19	**JV1267**
1.041	1.036	1.125	–	.625	19	**J1246**
1.041	1.036	1.125	–	.625	19	**JV1246**
1.062	1.057	1.187	1.437	.640	10	**JV1872**
1.125	1.120	1.250	–	.500	19	**J1158**
1.125	1.120	1.250	–	.500	19	**JX1158**
1.125	1.120	1.250	–	.625	19	**J1432**
1.125	1.120	1.250	–	.625	19	**JV1432**
1.177	1.172	1.300	–	.422	19	**J712**
1.250	1.245	1.375	1.562	.750	10	**JV1873**
1.251	1.246	1.375	–	.500	19	**JV1252**
1.251	1.246	1.375	–	.500	19	**JX1252**
1.343	1.338	1.500	–	.625	19	**JV1409**
1.365	1.360	1.496	–	.625	19	**JV1410**
1.375	1.370	1.500	–	.625	19	**JV1277**
1.468	1.463	1.625	–	.625	19	**J1493**
1.468	1.463	1.625	–	.625	19	**JV1493**
1.500	1.495	1.625	–	.415	19	**J1807**
1.500	1.495	1.625	–	.625	19	**J1101**
1.500	1.495	1.625	–	.625	19	**JV1101**
1.562	1.557	1.687	–	.625	19	**J1102**
1.562	1.557	1.687	–	.625	19	**JV1102**
1.625	1.620	1.750	–	.535	19	**JX1505**
1.625	1.620	1.750	–	.625	19	**J1103**
1.625	1.620	1.750	–	.625	19	**JV1103**
1.625	1.620	1.750	–	.750	19	**J1397**
1.625	1.620	1.755	–	.625	19	**JV1500**
1.646	1.641	1.745	–	.625	19	**J983**
1.731	1.726	1.812	3.000	1.000	#	**J1211**
1.737	1.732	–	3.100	.203	10	**J121**
1.750	1.745	1.875	–	.625	19	**J1105**
1.750	1.745	1.875	–	.625	19	**JV1105**
1.750	1.745	1.875	–	.625	19	**JX1105**
1.766	1.761	1.871	–	.875	19	**J825**
1.766	1.761	1.871	–	.875	19	**JV825**
1.766	1.761	1.871	–	.875	19	**JX825**
1.843	1.781	1.937	2.521	.782	8	**J1049**
1.812	1.807	1.937	–	.625	19	**J1106**
1.812	1.807	1.937	–	.625	19	**JV1106**
1.812	1.807	1.937	2.125	.718	10	**JV1464**
1.852	1.847	1.947	–	.647	19	**J1094**
1.875	1.870	2.000	–	.562	19	**J1063**
1.875	1.870	2.000	–	.625	19	**J1107**
1.875	1.870	2.000	–	.625	19	**JV1107**
1.875	1.870	2.000	–	.625	19	**JV1403**
1.876	1.871	1.933	–	.843	19	**J990**
1.980	1.975	2.111	–	.625	19	**JV1837**
2.000	1.995	2.125	–	.625	19	**J1109**
2.000	1.995	2.125	–	.625	19	**JV1109**
2.000	1.995	2.125	–	.750	19	**J1396**
2.062	2.057	2.187	–	.625	19	**J1110**
2.062	2.057	2.187	–	.625	19	**JV1110**
2.075	2.070	2.125	2.375	.448	10	**J1235**
2.097	2.093	2.187	2.725	.770	8	**J1065**
2.125	2.120	2.250	–	.625	19	**J1111**
2.125	2.120	2.250	–	.625	19	**JV1111**
2.125	2.120	2.250	2.250	.625	19	**JX1111**
2.125	2.120	2.250	2.437	.750	10	**JV1456**
2.126	2.121	2.200	2.953	.302	#	**JV2019**
–	2.140	2.331	2.625	.625	–	**JV1157**
2.187	2.182	2.312	–	.625	19	**J1112**
2.187	2.182	2.312	–	.625	19	**JV1112**
2.236	2.231	2.375	–	.625	19	**JV1836**
2.250	2.245	2.375	–	.625	19	**J1113**
2.250	2.245	2.375	–	.625	19	**JV1113**
–	2.250	2.404	3.073	.770	#	**J1064**
2.288	2.284	2.386	–	.453	15	**JV1018**
2.289	2.284	2.386	–	.453	15	**J756**
2.312	2.307	2.437	–	.625	19	**J1114**
2.312	2.307	2.437	–	.625	19	**JV1114**
2.375	2.370	2.500	–	.625	19	**J1115**
2.375	2.370	2.500	–	.625	19	**JV1115**
2.375	2.370	2.500	–	1.000	19	**JV1802**
2.375	2.370	2.500	–	1.000	19	**JX1990**
2.382	2.377	2.491	–	.937	19	**JX1920**
2.412	2.400	2.518	–	.435	15	**JV1304**
2.423	2.418	–	2.680	.488	#	**J1043**
2.437	2.432	2.562	2.750	.750	10	**JV1455**
–	2.437	2.570	–	.550	1	**JV933**
2.458	2.453	2.507	–	.700	1	**JV970**
2.475	2.470	2.625	–	1.125	19	**J1876**
2.500	2.495	2.625	–	.625	19	**J1117**
2.500	2.495	2.625	–	.625	19	**JV1117**
2.500	2.495	2.625	–	.625	19	**JX1117**
2.500	2.495	2.625	–	.875	19	**J1288**
2.502	2.498	2.627	–	1.000	19	**J1780**
2.536	2.531	3.128	–	.625	#	**J790**
2.536	2.531	3.128	–	.625	#	**JV790**
2.641	2.562	2.755	–	.690	1	**J1086**
2.567	2.562	3.115	–	.625	#	**JV1161**
2.625	2.620	2.750	–	.625	19	**J1118**
2.625	2.620	2.750	–	.625	19	**JV1118**
2.636	2.630	2.722	–	.500	1	**JV1373**
2.698	2.690	2.774	–	.953	#	**JV1216**
2.728	2.722	2.806	–	.590	1	**JV1215**
2.750	2.745	2.875	–	.625	19	**J1119**
2.750	2.745	2.875	–	.625	19	**JV1119**
2.750	2.745	2.875	–	.625	19	**J1515**
2.750	2.745	2.875	–	.750	19	**JX1576**
2.750	2.745	2.875	–	.875	19	**J1289**
2.763	2.758	2.860	–	.435	15	**J493**
–	2.799	2.911	3.125	.640	#	**JV1673**
2.809	2.804	2.894	3.250	.500	8	**JV1076**
2.812	2.807	2.937	3.156	1.000	10	**JV1427**
2.812	2.807	2.943	3.156	1.000	10	**J1427**
2.875	2.870	3.000	–	.625	19	**J1120**
2.875	2.870	3.000	–	.625	19	**JV1120**
2.875	2.870	3.000	–	.625	19	**JX1120**
2.890	2.885	3.000	–	1.000	19	**J1173**
2.890	2.885	3.000	–	1.000	19	**JV1173**
2.906	2.900	3.000	3.125	.562	#	***JV1099**
2.906	2.900	3.000	3.125	.562	#	**JV1371**
2.896	2.965	–	–	.245	#	**SK3**++
3.000	2.994	3.125	–	.625	19	**J1121**
3.000	2.994	3.125	–	.625	19	**JV1121**
3.000	2.994	3.125	–	.687	19	**JX1747**
3.000	2.995	3.125	–	1.250	#	**J1044**
3.010	3.005	3.115	–	.435	15	**JV495**
3.035	3.030	3.125	3.750	1.070	8	**J1191**
3.125	3.118	3.261	3.562	.920	10	**JV1508**
3.125	3.119	3.225	–	.625	19	**J1082**
3.125	3.119	3.250	–	.625	19	**J1122**
3.125	3.119	3.250	–	.625	19	**JV1122**
3.125	3.119	3.250	–	.625	19	**JX1122**
3.125	3.119	3.250	–	.750	19	**J1401**
3.125	3.119	3.250	–	.750	19	**JX1401**
3.130	3.124	3.226	–	.435	15	**J873**
3.146	3.140	3.224	–	.625	1	**JV949**
–	3.187	3.322	–	.970	1	**J872**
3.250	3.244	3.353	–	.625	19	**J1084**
3.250	3.244	3.375	–	.625	19	**J1123**
3.250	3.244	3.375	–	.625	19	**JV1123**
3.250	3.244	3.375	3.625	.750	10	**JV1875**
3.266	3.260	3.313	–	.453	1	**JV1236**
3.375	3.369	3.500	–	.625	19	**J1124**

For Illustration and Material Data See Technical Section

Designed For A Specific Application - Not Recommended For General Use ++ Not Sold Separately

* The U.S. customer service number is 877-4-TIMKEN. The Canadian customer service numbers are 800-565-4927 (English) and 800-565-0438 (French-Canadian).

Shaft	I.D.	Eff. Shaft Dia.	Flanged O.D.	Width	Type Illus.	Part No.
3.375	3.369	3.500	–	.625	19	**JV1124**
3.375	3.369	3.500	–	1.125	19	**J1718**
3.475	3.375	3.573	–	.800	1	**JV1179**
3.419	3.414	3.510	–	.531	1	**JV1091**
3.437	3.430	3.566	3.875	.875	10	**JV1509**
–	3.453	4.380	–	.812	2	**JV976**
3.500	3.494	3.625	–	.625	19	**J1125**
3.500	3.494	3.625	–	.625	19	**JV1125**
3.500	3.494	3.625	–	.625	19	**JX1125**
3.500	3.494	3.625	3.937	.718	10	**JV1494**
3.500	3.494	3.625	–	.875	19	**J1293**
3.562	3.556	3.666	3.825	.718	10	**J1469**
3.562	3.556	3.687	3.825	.718	10	**JV1469**
4.691	3.562	4.786	–	.840	1	**J1025**
3.625	3.619	3.750	–	.625	19	**J1126**
3.625	3.619	3.750	–	.625	19	**JV1126**
3.625	3.619	3.750	–	.625	19	**JV1368**
3.625	3.619	3.750	4.000	.875	10	**JV1874**
3.668	3.662	3.798	–	.530	#	**JV1936**
3.678	3.670	3.755	–	.625	1	**JV1517**
3.678	3.670	3.758	–	.625	1	**JV1582**
3.686	3.680	3.767	–	.625	1	**JV1166**
3.721	3.715	3.805	4.200	.458	19	**JV1152**
3.742	3.732	3.821	–	.500	#	**J1750**
3.750	3.744	3.875	–	.625	19	**J1127**
3.750	3.744	3.875	–	.625	19	**JV1127**
–	3.750	3.942	4.250	.500	#	**JV1897**
3.874	3.868	4.035	–	.831	19	**JV1074**
3.874	3.868	4.040	4.500	.921	10	**JV1361**
3.875	3.869	4.000	–	.625	19	**J1128**
3.875	3.869	4.000	–	.625	19	**JV1128**
3.875	3.869	4.000	–	.625	19	**JX1128**
3.930	3.925	4.375	–	.875	#	**JV1511A**
3.936	3.930	4.042	4.375	.859	#	**JV1362**
3.937	3.930	4.070	4.375	.875	10	**JV1511**
4.000	3.989	4.125	–	.625	19	**J1129**
4.000	3.994	4.125	–	.625	19	**JV1129**
4.000	3.994	4.125	4.312	.718	10	**JV1461**
–	4.000	4.630	–	.700	1	**JV1976**
4.062	4.056	4.187	4.375	.875	10	**JV1473**
4.090	4.083	–	5.125	.235	#	**J1380**
4.125	4.119	4.250	–	.625	19	**J1130**
4.125	4.119	4.250	–	.625	19	**JV1130**
4.275	4.187	4.375	5.125	.898	8	**J1172**
4.275	4.187	4.375	5.125	.898	8	**JV1172**
4.212	4.207	4.325	–	.984	19	**JX2045**
4.250	4.244	4.375	–	.750	19	**J1131**
4.250	4.244	4.375	–	.750	19	**JV1131**
4.250	4.244	4.375	–	.750	19	**JX1131**
4.260	4.256	4.387	4.625	.656	10	**JV1210**
4.481	4.312	4.572	–	.750	1	**JV980**
4.346	4.340	4.906	5.625	.563	#	**J1425**
4.375	4.368	4.500	4.812	.843	10	**JV1512**
4.375	4.369	4.500	–	.750	19	**J1132**
4.375	4.369	4.500	–	.750	19	**JV1132**
4.375	4.369	4.500	–	.750	19	**JX1132**
4.465	4.459	4.575	5.125	.230	14	**J1405**
4.474	4.468	4.604	–	.530	19	**JV1935**
4.500	4.493	4.625	–	.625	19	**J1238**
4.500	4.493	4.625	–	.625	19	**JX1238**
4.500	4.493	4.625	–	.625	19	**J1929**
4.500	4.493	4.625	–	.687	19	**JV1363**
4.500	4.493	4.625	–	.687	19	**JX1363**
4.500	4.493	4.625	–	.750	19	**J1133**
4.500	4.493	4.625	–	.750	19	**JV1133**
4.500	4.493	4.625	4.937	.912	10	**JV1513**
4.500	4.494	5.500	–	.875	#	**J1197**
4.502	4.496	4.627	–	1.000	19	**J1880**
–	4.500	5.130	–	.600	1	**JV1077**
–	4.500	5.130	–	.700	1	**JV1977**

Shaft	I.D.	Eff. Shaft Dia.	Flanged O.D.	Width	Type Illus.	Part No.
4.535	4.530	4.625	–	.670	#	**J1284**
4.541	4.535	4.625	–	.468	1	**J1151**
4.625	4.618	4.739	–	.340	19	**J1155**
4.625	4.618	4.750	–	.750	19	**J1134**
4.625	4.618	4.750	–	.750	19	**JV1134**
4.636	4.631	4.744	–	.750	19	**JX847**
4.646	4.639	4.742	–	.625	19	**JX1386**
4.687	4.679	4.812	–	1.240	19	**JF2282**
4.687	4.680	4.740	–	.283	15	***JV608**
4.687	4.680	4.812	–	1.240	19	**JX1867**
4.687	4.683	4.812	–	1.562	19	**J729**
4.687	4.683	4.826	–	1.562	19	**JV729**
4.918	4.687	5.009	–	.906	1	**JV1060**
4.750	4.743	4.853	5.187	.812	10	**JV1462**
4.750	4.743	4.875	–	.750	19	**J1135**
4.750	4.743	4.875	–	.750	19	**JV1135**
4.764	4.759	5.510	–	.875	#	**JV753**
4.812	4.812	5.510	–	.875	#	**JV701**
4.834	4.829	4.994	–	.710	#	**JX2162**
4.840	4.834	5.000	–	.750	19	***JX1967**
4.875	4.868	5.000	–	.715	19	**J1606**
4.875	4.868	5.000	–	.750	19	**J1136**
4.875	4.868	5.000	–	.750	19	**JV1136**
4.875	4.868	5.000	–	.750	19	**JX1136**
4.875	4.868	5.000	–	1.000	19	**JV2038**
4.875	4.868	5.000	–	1.250	19	**JV1999**
4.917	4.910	5.004	–	.937	1	**JV943**
–	4.937	5.128	5.875	.838	8	**J1159**
5.000	4.993	5.125	–	.750	19	**J1137**
5.000	4.993	5.125	–	.750	19	**JV1137**
5.000	4.993	5.125	–	.750	19	**JX1137**
5.000	4.993	5.125	–	.875	19	**JX1831**
5.187	5.179	5.312	–	1.380	19	**JF2280**
5.187	5.180	5.312	–	.750	19	**J2037**
5.250	5.243	5.375	–	.750	19	**J1138**
5.250	5.243	5.375	–	.750	19	**JV1138**
5.375	5.368	5.500	–	.750	19	**J1081**
5.375	5.368	5.500	–	.848	#	**J1828**
5.375	5.368	5.500	–	.848	#	**JX1828**
5.392	5.385	5.500	–	.625	19	**JV1704**
5.400	5.393	5.442	–	.760	1	**JV1944**
5.500	5.493	5.625	–	.750	19	**J1139**
5.500	5.493	5.625	–	.750	19	**JV1139**
5.500	5.493	5.625	5.812	.875	10	**JV1463**
5.625	5.618	5.750	–	1.000	19	**J1355**
5.625	5.618	5.750	–	1.000	19	**JV1355**
5.625	5.618	5.754	–	1.250	19	**JV1978**
5.637	5.630	5.755	–	1.175	1	**J953**
5.641	5.634	5.743	–	.750	19	**JX845**
5.750	5.743	5.875	–	.750	19	**J1140**
5.750	5.743	5.875	–	.750	19	**JV1140**
5.795	5.785	5.880	–	1.000	1	**JV1550**
5.875	5.868	6.000	–	.875	19	**JV1002**
5.875	5.868	6.000	–	.875	19	**JX1002**
5.900	5.890	6.000	7.125	1.035	8	**J1245**
5.991	5.986	6.100	–	.455	#	**JV2088**
6.000	5.993	6.125	–	.750	19	**J1141**
6.000	5.993	6.125	–	.750	19	**JV1141**
6.000	5.993	6.125	6.125	.750	19	**JX1141**
6.080	6.073	6.204	–	.600	19	**J1895**
6.081	6.073	6.204	–	.750	19	**J1842**
6.079	6.073	6.204	–	.866	19	**J2053**
6.081	6.073	6.204	–	1.031	19	**J1824**
6.187	6.180	6.312	–	.848	#	**J1838**
6.206	6.198	6.328	–	.812	19	**J1825**
6.206	6.198	6.328	–	.812	19	**JV1825**
6.375	6.368	6.500	–	.875	19	**J1869**
6.375	6.368	6.500	–	.875	19	**JV1869**
6.444	6.437	6.526	–	.550	1	**JV1019**
6.500	6.492	6.625	–	.625	19	***JL2361**

For Illustration and Material Data See Technical Section

Designed For A Specific Application - Not Recommended For General Use

* The U.S. customer service number is 877-4-TIMKEN. The Canadian customer service numbers are 800-565-4927 (English) and 800-565-0438 (French-Canadian).

Shaft	I.D.	Eff. Shaft Dia.	Flanged O.D.	Width	Type Illus.	Part No.
6.500	6.492	6.625	–	.750	19	* **JG2361**
6.500	6.492	6.625	–	.875	19	* **JG2345**
6.575	6.515	6.687	7.531	1.040	8	**J1059**
6.875	6.867	7.000	–	.750	19	**J1278**
6.875	6.867	7.000	–	.750	19	**JV1278**
6.875	6.867	7.000	7.187	1.000	10	**JV1474**
6.892	6.884	6.993	–	.937	19	**JX846**
7.117	7.109	8.356	8.453	1.684	#	**J892**
7.221	7.214	–	7.767	.491	#	**J893**
7.375	7.367	7.500	–	.875	19	**JV1190**
7.375	7.367	7.500	–	.875	19	**JX1190**
–	7.500	7.881	8.562	.781	#	**JV1378**
7.625	7.617	7.750	–	1.125	19	**JV1759**
7.750	7.742	7.875	–	1.000	19	**JV1760**
7.875	7.867	8.011	–	.750	19	**JV1669**
8.125	8.117	8.250	–	1.470	19	**JV1850**
–	8.125	8.250	9.500	.875	8	**J1196**
–	8.125	8.250	9.375	1.085	#	**J1629**
8.525	8.517	8.625	10.550	1.105	8	**J1087**
9.058	9.048	9.173	–	1.000	19	**J1984**
9.265	9.256	9.365	–	.990	19	**JV829**
9.265	9.256	9.365	–	.990	19	**JX829**
9.265	9.256	9.365	–	.990	19	**JXS829**
10.312	10.303	10.479	–	1.125	19	**JV1808**
10.915	10.906	–	11.975	.815	10	**J930**
12.345	11.260	12.400	–	.590	1	**J986**

Shaft	I.D.	Eff. Shaft Dia.	Flanged O.D.	Width	Type Illus.	Part No.

For Illustration and Material Data See Technical Section
Designed For A Specific Application - Not Recommended For General Use
* The U.S. customer service number is 877-4-TIMKEN. The Canadian customer service numbers are 800-565-4927 (English) and 800-565-0438 (French-Canadian).

Shaft Range Minimum	Maximum	Part No.	Width on Shaft	Overall Width	Flanged O.D.	Installation Depth
.469	.475	**99049**	.236	.331	.787	.472
.498	.502	**99050**	.250	.344	.610	2.008
.560	.566	**99056**	.250	.391	.750	1.831
.589	.593	**99059**	.197	.354	.750	.425
.623	.627	**99062**	.313	.406	.813	2.000
.626	.630	**99058**	.313	.438	.718	2.000
.667	.671	**99068**	.315	.433	1.063	2.008
.682	.686	**99060**	.313	.438	.900	2.000
.704	.709	**99082**	.315	.433	1.063	1.811
.748	.752	**99076**	.313	.438	.938	2.000
.748	.752	**99075**	.375	.500	.900	2.000
.759	.761	**99081**	.313	.438	.938	2.000
.780	.784	**99080**	.313	.438	.935	2.000
.785	.789	**99078**	.313	.433	.999	2.000
.857	.861	**99086**	.250	.375	1.155	2.000
.861	.866	**99085**	.315	.472	1.058	1.813
.873	.877	**99087**	.313	.438	1.093	2.000
.908	.912	**99091**	.313	.438	1.218	1.847
.966	.970	**99094**	.313	.438	1.130	2.000
.966	.970	**99096**	.625	.719	1.130	2.000
.982	.986	**99098**	.313	.433	1.378	2.000
.998	1.002	**99101**	.313	.438	1.219	2.000
1.019	1.024	**99103**	.313	.472	1.312	1.813
1.060	1.064	**99106**	.313	.438	1.320	2.812
1.087	1.091	**99108**	.313	.438	1.406	.625
1.100	1.104	**99111**	.375	.500	1.375	2.813
1.123	1.127	**99112**	.313	.438	1.575	.688
1.154	1.158	**99120**	.375	.500	1.350	.688
1.173	1.178	**99122**	.313	.438	1.575	.688
1.179	1.184	**99114**	.315	.433	1.400	.688
1.185	1.190	**99118**	.313	.438	1.400	.875
1.216	1.222	**99123**	.315	.438	1.575	.688
1.237	1.243	**99141**	.315	.438	1.540	.688
1.247	1.253	**99125**	.313	.438	1.500	.688
1.257	1.263	**99128**	.315	.437	1.496	.709
1.308	1.314	**99129**	.250	.375	1.600	.813
1.310	1.316	**99131**	.500	.625	1.594	.813
1.336	1.342	**99134**	.500	.625	1.638	.813
1.371	1.377	**99133**	.313	.438	1.638	.813
1.371	1.377	**99138**	.500	.625	1.638	.813
1.375	1.381	**99139**	.512	.630	1.638	.812
1.412	1.417	**99146**	.518	.669	1.689	.984
1.432	1.438	**99143**	.563	.688	1.781	1.000
1.435	1.441	**99144**	.375	.500	1.781	1.016
1.453	1.460	**99145**	.375	.500	1.781	.812
1.490	1.496	**99147**	.512	.669	1.780	.984
1.497	1.503	**99150**	.375	.500	1.781	1.016
1.497	1.503	**99149**	.563	.688	1.781	1.000
1.520	1.526	**99152**	.438	.563	1.859	1.016
1.549	1.555	**99155**	.438	.563	1.859	1.000
1.559	1.565	**99156**	.563	.688	1.859	1.000
1.572	1.578	**99157**	.512	.630	1.850	1.023
1.602	1.608	**99160**	.500	.641	1.938	1.000
1.622	1.628	**99161**	.313	.438	1.875	1.016
1.623	1.628	**99162**	.563	.688	1.875	.813
1.647	1.654	**99166**	.445	.571	2.087	.827
1.647	1.654	**99169**	.563	.688	2.087	.827
1.684	1.690	**99168**	.563	.688	1.906	.875
1.685	1.691	**99167**	.313	.438	1.906	.875
1.715	1.721	**99171**	.563	.688	2.031	.813
1.736	1.742	**99170**	.375	.500	2.063	.813
1.747	1.753	**99172**	.375	.500	2.055	.813
1.747	1.753	**99180**	.531	.625	2.063	.875
1.747	1.753	**99174**	.563	.688	2.063	.813
1.747	1.753	**99175**	.750	.875	2.063	.813
1.761	1.767	**88176**	.563	.688	2.063	.813
1.761	1.767	**99176**	.563	.688	2.063	.813
1.769	1.775	**99177**	.551	.669	2.087	.812
1.778	1.784	**88179**	.675	.800	2.125	1.000
1.778	1.784	**99179**	.675	.800	2.125	1.062

Shaft Range Minimum	Shaft Range Maximum	Part No.	Width on Shaft	Overall Width	Flanged O.D.	Installation Depth
1.809	1.815	**99181**	.563	.688	2.156	1.000
1.857	1.863	**99185**	.563	.688	2.156	1.000
1.866	1.872	**88186**	.889	1.025	2.187	1.000
1.866	1.872	**99186**	.889	1.025	2.187	1.000
1.872	1.878	**99190**	.175	.295	2.203	.744
1.872	1.878	**99188**	.295	.415	2.203	.744
1.872	1.878	**99184**	.375	.516	2.203	1.050
1.872	1.878	**88187**	.563	.688	2.203	1.000
1.872	1.878	**99187**	.563	.688	2.203	1.000
1.887	1.893	**99189**	.551	.668	2.205	.984
1.909	1.915	**99192**	.375	.500	2.219	1.000
1.934	1.940	**99193**	.563	.688	2.219	1.000
1.965	1.971	**99196**	.551	.688	2.244	.984
1.977	1.983	**99198**	.563	.704	2.313	1.050
1.997	2.003	**88199**	.563	.688	2.406	1.000
1.997	2.003	**99199**	.563	.688	2.406	1.000
1.997	2.003	**99200**	.875	1.000	2.406	1.000
2.041	2.047	**99204**	.500	.625	2.469	1.000
2.057	2.063	**99205**	.781	.938	2.469	1.375
2.123	2.128	**99210**	.500	.750	2.422	1.281
2.124	2.130	**99212**	.781	.938	2.422	1.375
2.162	2.168	**99215**	.787	.905	2.441	1.250
2.186	2.192	**88218**	.781	.938	2.500	1.313
2.186	2.192	**99218**	.781	.938	2.500	1.313
2.197	2.205	**99220**	.500	.625	2.500	1.250
2.227	2.233	**99229**	.500	.625	2.531	1.313
2.227	2.233	**99230**	.781	.906	2.531	1.250
2.237	2.243	**99226**	.764	.900	2.562	1.250
2.249	2.255	**99227**	.313	.438	2.531	1.313
2.249	2.255	**88225**	.781	.938	2.531	1.313
2.249	2.255	**99225**	.781	.938	2.531	1.313
2.309	2.315	**99231**	.781	.938	2.688	1.600
2.327	2.333	**88233**	.750	.875	2.750	1.610
2.327	2.333	**99233**	.750	.875	2.750	1.610
2.359	2.365	**99241**	.370	.449	2.783	1.472
2.359	2.365	**99235**	.787	.905	2.785	1.375
2.369	2.375	**99236**	.781	.938	2.750	1.375
2.372	2.378	**99238**	.594	.750	2.750	1.375
2.374	2.380	**99240**	.526	.683	2.750	1.375
2.374	2.380	**99237**	.781	.938	2.734	1.375
2.434	2.440	**99243**	.781	.938	2.828	1.375
2.435	2.441	**99242**	.500	.626	2.827	1.417
2.489	2.495	**99249**	.781	.938	2.875	1.393
2.497	2.503	**99253**	.555	.650	2.820	.890
2.500	2.506	**99248**	.500	.656	2.828	1.375
2.500	2.506	**99250**	.781	.938	2.828	1.375
2.510	2.516	**99251**	.781	.906	2.828	1.438
2.556	2.562	**99254**	.787	.905	2.850	1.378
2.560	2.566	**99256**	.781	.938	2.891	1.375
2.595	2.602	**99259**	.781	.938	2.990	1.250
2.618	2.624	**99261**	.781	.938	3.047	1.375
2.621	2.627	**99264**	.781	.906	3.047	1.375
2.622	2.628	**99260**	.500	.625	3.047	1.375
2.625	2.631	**99262**	.781	.938	3.047	1.375
2.727	2.733	**99268**	.781	.906	3.125	1.313
2.740	2.746	**99273**	.781	.938	3.065	1.250
2.745	2.751	**99274**	.781	.938	3.125	1.250
2.747	2.753	**99270**	.781	.906	3.125	1.250
2.747	2.753	**99267**	1.438	1.625	3.075	1.625
2.750	2.756	**99272**	.406	.563	3.125	1.250
2.750	2.756	**99275**	.781	.938	3.125	1.250
2.750	2.756	**99269**	1.125	1.250	3.125	1.250
2.753	2.759	**99276**	.787	.945	3.125	1.250
2.809	2.815	**99281**	.594	.688	3.188	1.250
2.838	2.844	**99282**	.500	.656	3.225	1.250
2.866	2.872	**99286**	.781	.938	3.188	1.250
2.873	2.879	**99287**	.781	.938	3.219	1.250
2.937	2.943	**99290**	.500	.641	3.344	1.331
2.937	2.943	**99293**	.781	.938	3.344	1.250
2.950	2.956	**99289**	.594	.689	3.272	1.102

Shaft Range Minimum	Shaft Range Maximum	Part No.	Width on Shaft	Overall Width	Flanged O.D.	Installation Depth
2.950	2.956	**99294**	.866	1.024	3.305	1.312
2.972	2.976	**99292**	.813	–	–	–
2.990	2.996	**99291**	.484	.625	3.359	1.331
2.990	2.996	**99298**	.563	.688	3.359	1.375
2.990	2.996	**99299**	.813	1.000	3.359	1.250
2.997	3.003	**99296**	.813	.938	3.240	1.375
3.000	3.006	**99303**	.625	.813	3.345	1.063
3.000	3.006	**99300**	.813	1.000	3.453	1.250
3.008	3.014	**99301**	.500	.625	3.355	2.000
3.120	3.126	**99311**	.688	.813	3.531	2.000
3.120	3.126	**99312**	.813	1.000	3.531	2.000
3.124	3.132	**99307**	.551	.709	3.525	2.031
3.142	3.150	**99313**	.750	.886	3.540	1.375
3.146	3.153	**99317**	.433	.590	3.543	1.378
3.146	3.153	**99315**	.827	.945	3.543	1.375
3.225	3.231	**99328**	.661	.850	3.587	1.732
3.247	3.253	**99322**	.813	1.000	3.594	1.375
3.248	3.254	**99323**	.600	.725	3.585	1.375
3.250	3.256	**99324**	.595	.719	3.594	1.375
3.250	3.256	**99326**	.688	.875	3.585	1.250
3.250	3.256	**99325**	.813	1.000	3.594	1.375
3.307	3.313	**99331**	.813	1.000	3.688	1.375
3.337	3.346	**99333**	.827	.984	3.700	1.378
3.338	3.346	**99334**	.827	.984	3.697	1.433
3.373	3.379	**99338**	.375	.500	3.688	1.410
3.373	3.379	**99337**	.813	1.000	3.688	1.375
3.435	3.441	**99339**	.781	.906	3.844	1.406
3.477	3.483	**99340**	.781	.906	3.835	1.406
3.500	3.506	**99347**	.315	.500	3.827	1.339
3.500	3.506	**99350**	.813	1.000	3.844	1.375
3.501	3.507	**99349**	.626	.811	3.842	1.339
3.540	3.546	**99353**	.528	.665	4.000	1.732
3.540	3.546	**99351**	.710	.906	4.000	1.813
3.540	3.546	**99354**	.906	1.102	4.000	1.750
3.560	3.566	**99356**	.813	1.000	3.900	1.750
3.618	3.624	**99360**	.811	1.000	4.031	1.732
3.623	3.629	**99363**	.500	.625	4.025	1.750
3.623	3.629	**99362**	.813	1.000	4.031	1.750
3.684	3.690	**99368**	.313	.438	3.830	.875
3.685	3.691	**99359**	.813	.938	4.025	1.750
3.685	3.691	**99365**	.813	.938	4.025	1.750
3.737	3.743	**99369**	.827	.945	4.025	1.750
3.740	3.746	**99374**	.344	.500	4.031	1.750
3.740	3.746	**99364**	.469	.594	4.035	1.750
3.746	3.752	**99376**	.563	.688	4.025	1.750
3.750	3.756	**99367**	.344	.500	4.031	1.750
3.750	3.756	**99372**	.688	.875	4.031	1.875
3.873	3.879	**99387**	.813	1.000	4.219	1.875
3.935	3.941	**99393**	.813	1.000	4.313	1.340
3.998	4.006	**99401**	.500	.625	4.375	2.066
3.998	4.006	**99395**	.600	.725	–	2.050
3.998	4.006	**99400**	.650	.775	4.375	1.375
3.998	4.006	**99399**	.813	1.000	4.375	1.250
4.122	4.130	**99412**	.813	1.000	4.420	1.375
4.130	4.138	**99413**	.787	.906	4.470	1.378
4.183	4.191	**99418**	.813	1.000	4.500	1.375
4.226	4.234	**99423**	.781	.906	4.610	1.438
4.248	4.256	**99424**	.813	1.000	4.813	1.375
4.327	4.335	**99435**	.509	.650	4.921	1.250
4.370	4.378	**99437**	.813	1.000	4.750	1.650
4.434	4.442	**99439**	1.000	1.142	4.813	1.313
4.496	4.504	**99450**	.813	1.000	5.000	1.375
4.523	4.531	**99452**	.813	.938	5.000	1.250
4.621	4.629	**99465**	.438	.625	5.000	1.375
4.621	4.629	**99463**	1.000	1.250	5.063	1.375
4.685	4.693	**99468**	.812	1.000	5.062	1.375
4.720	4.728	**99473**	.787	.984	5.110	1.260
4.746	4.754	**99475**	.500	.750	5.250	1.500
4.801	4.807	**99472**	.787	.945	5.177	1.260
4.871	4.879	**99487**	.625	.752	5.252	1.457

Shaft Range Minimum	Maximum	Part No.	Width on Shaft	Overall Width	Flanged O.D.	Installation Depth
4.917	4.925	**99490**	.394	.551	5.402	1.457
4.917	4.925	**99492**	1.024	1.260	5.400	1.438
4.998	5.006	**99498**	.688	.875	5.400	1.438
4.998	5.006	**99499**	.813	1.000	5.406	1.500
5.110	5.118	**99494**	.750	.938	5.493	1.181
5.117	5.125	**99491**	.866	.996	5.492	1.299
5.246	5.254	**99525**	.813	1.000	5.560	1.250
5.371	5.379	**99537**	.813	1.000	5.875	1.250
5.498	5.506	**99549**	.812	1.000	5.938	1.250
5.508	5.516	**99552**	.807	1.000	5.945	1.250
5.746	5.754	**99575**	.813	1.000	6.180	1.750
5.871	5.879	**99587**	1.000	1.250	6.188	1.313
5.895	5.905	**99595**	1.024	1.181	6.260	1.338
5.934	5.942	**99596**	1.000	1.125	6.375	1.875
5.995	6.003	**99601**	.500	.750	6.360	1.750
5.995	6.003	**99599**	1.000	1.250	6.375	1.750
6.092	6.102	**99606**	1.024	1.181	6.500	1.299
6.245	6.255	**99625**	1.031	1.250	6.625	1.750
6.289	6.299	**99630**	1.000	1.250	7.000	1.800
6.495	6.505	**99650**	1.000	1.250	7.000	1.750
6.683	6.693	**99640**	1.250	1.496	7.188	1.750
6.745	6.755	**99675**	.813	1.063	7.125	1.750
6.995	7.005	**99700**	1.000	1.250	7.500	1.750
7.077	7.087	**99721**	1.300	1.496	7.500	1.752
7.244	7.254	**99725**	1.250	1.500	7.760	2.175
7.495	7.505	**99750**	.813	1.000	7.875	1.250
7.745	7.755	**99775**	1.000	1.313	8.270	1.875
7.869	7.879	**99787**	1.359	1.500	8.375	1.750
7.933	7.943	**99799**	1.000	1.250	8.375	1.750
7.995	8.005	**99800**	1.000	1.250	8.375	1.750

1000 SERIES

Part No.	Lip Mat'l	Shaft Size	Hsg. Bore	Seal O.D.	Seal Width	Type/ Illus.
1012★	S	45,00	62,00	62,30	8,00	35
		1.772	2.441	2.453	.315	
1012N★	S	45,00	62,00	62,30	8,00	35
		1.772	2.441	2.453	.315	
1015★	S	18,00	28,00	28,20	6,00	35
		.709	1.102	1.110	.236	
1015N★	S	18,00	28,00	28,20	6,00	35
		.709	1.102	1.110	.236	
1019★⬅	H	76,00	93,00	93,30	10,00	32
		2.992	3.661	3.673	.394	
1021★⬅	V	70,00	87,00	87,40	8,50	32
		2.756	3.425	3.441	.335	
1021V★⬅	V	70,00	87,00	87,40	8,50	32
		2.756	3.425	3.441	.335	
1036★➡	S	40,00	76,00	76,25	8,00	40
		1.575	2.992	3.002	.315	
1037	S	1.125	1.500	1.504	.250	35
1038★➡	N	38,00	59,00	59,30	9,00	32
		1.496	2.323	2.335	.354	
1041	S	.500	1.006	1.010	.250	48
1049	S	.750	1.125	1.129	.250	33
*1070	S	1.250	2.133	2.137	.313	35
*1077★	S	35,00	52,00	52,13	8,50	33
		1.378	2.047	2.052	.335	
*1078★	S	40,00	60,00	60,20	10,00	33
		1.575	2.362	2.370	.394	
*1086★	S	35,00	58,00	58,14	11,90	33
		1.378	2.283	2.289	.469	
1097	S	1.375	1.947	1.951	.500	33
1097N	S	1.375	1.947	1.951	.500	33
*1107★	S	28,00	40,00	40,31	7,00	33
		1.102	1.575	1.587	.276	
1108★➡	V	35,00	48,00	48,40	7,00	32
		1.378	1.890	1.906	.276	
1110	F	1.400	1.969	2.000	.250	#
1119★➡	V	35,00	54,00	54,30	8,00	32
		1.378	2.126	2.138	.315	
1120★⬅	V	38,00	53,00	53,30	8,00	32
		1.496	2.087	2.098	.315	
1121★⬅	V	31,00	46,00	46,28	8,00	32
		1.220	1.811	1.822	.315	
1126★	S	39,00	50,50	50,75	8,50	25
		1.535	1.988	1.998	.335	
1128★	S	39,00	50,80	51,00	7,50	35
		1.535	2.000	2.008	.295	
1129★	S	30,00	40,00	40,25	7,00	35
		1.181	1.575	1.585	.276	
1136★⬅	N	35,00	76,00	76,30	12,50	30
		1.378	2.992	3.004	.492	
*1140★	N	35,00	68,00	68,23	12,50	32
		1.378	2.677	2.686	.492	
1146★⬅	N	40,00	76,00	76,28	12,50	32
		1.575	2.992	3.003	.492	
1147★➡	N	35,00	76,00	76,28	9,00	32
		1.378	2.992	3.003	.354	
*1162★	S	70,00	90,00	90,40	10,00	35
		2.756	3.543	3.559	.394	
*1163★	S	22,00	40,00	40,18	16,00	#
		.866	1.575	1.582	.630	
1167★	N	32,00	52,00	52,25	11,00	32
		1.260	2.047	2.057	.433	
1168★	S	33,00	50,00	50,25	12,00	32
		1.299	1.969	1.978	.472	
*1169★	N	35,00	50,00	50,24	12,00	32
		1.378	1.969	1.978	.472	
1170★	S	35,00	52,00	52,25	10,00	32
		1.378	2.047	2.057	.394	
*1171★	S	35,00	55,00	55,30	11,00	32
		1.378	2.165	2.177	.433	

1000 SERIES (cont.)

Part No.	Lip Mat'l	Shaft Size	Hsg. Bore	Seal O.D.	Seal Width	Type/ Illus.
1172★➡	H	35,00	47,00	47,40	7,00	32
		1.378	1.850	1.866	.276	
1173★	N	35,00	67,00	67,27	12,00	32
		1.378	2.638	2.648	.472	
1174★	S	38,00	52,00	52,25	8,50	32
		1.496	2.047	2.057	.335	
1175★➡	S	38,00	58,00	58,25	11,00	32
		1.496	2.283	2.293	.433	
1176★	N	38,00	65,00	65,27	12,00	#
		1.496	2.559	2.570	.472	
1177★	N	38,00	74,00	74,27	11,00	32
		1.496	2.913	2.924	.433	
1178★	S	40,00	52,00	52,25	6,00	32
		1.575	2.047	2.057	.236	
*1179★	S	40,00	62,00	62,25	10,00	#
		1.575	2.441	2.451	.394	
1180★	S	41,00	55,00	55,29	7,00	32
		1.614	2.165	2.177	.276	
1181★	S	41,00	56,00	56,25	7,00	35
		1.614	2.205	2.215	.276	
1183★	S	43,00	55,00	55,25	8,00	34
		1.693	2.165	2.175	.315	
*1184★	N	45,00	60,00	60,25	10,00	35
		1.772	2.362	2.372	.394	
*1185★	S	45,00	62,00	62,30	10,00	32
		1.772	2.441	2.453	.394	
1187★	S	47,00	68,00	68,27	10,00	32
		1.850	2.677	2.688	.394	
1188★	S	48,00	62,00	62,25	6,00	34
		1.890	2.441	2.451	.236	
*1189★	S	50,00	70,00	70,30	9,50	32
		1.969	2.756	2.768	.374	
1192	S	1.605	2.374	2.386	.375	32
*1193★	S	27,00	41,00	41,10	9,50	#
		1.063	1.614	1.618	.374	
1195	S	1.562	2.061	2.275	.338	32
1196★	S	38,00	52,00	52,25	6,00	47
		1.496	2.047	2.057	.236	
*1204★	S	32,00	58,00	58,29	12,70	32
		1.260	2.283	2.295	.500	
1205★	S	39,00	52,00	52,30	11,30	47
		1.535	2.047	2.059	.445	
1205N★	S	39,00	52,00	52,10	11,30	47
		1.535	2.047	2.051	.445	
1207★	S	55,00	74,00	74,28	9,20	49
		2.165	2.913	2.924	.362	
1207N★	S	55,00	74,00	74,10	9,20	49
		2.165	2.913	2.917	.362	
1208★	S	48,00	72,00	72,31	7,00	32
		1.890	2.835	2.847	.276	
1209★	S	50,00	65,00	65,33	8,50	35
		1.969	2.559	2.572	.335	
1213★	S	40,00	54,00	54,10	5,50	47
		1.575	2.126	2.130	.217	
1213N★	S	40,00	54,00	54,10	5,50	47
		1.575	2.126	2.130	.217	
1214★	S	42,00	54,89	55,00	8,00	47
		1.654	2.161	2.165	.315	
1214N★	S	42,00	54,89	55,00	8,00	47
		1.654	2.161	2.165	.315	
1215★	N	35,00	48,00	48,25	14,00	#
		1.378	1.890	1.900	.551	
1215N★	N	35,00	48,00	48,25	14,00	#
		1.378	1.890	1.900	.551	
1216★&	N	40,00	64,00	64,00	11,98	74
		1.575	2.520	2.520	.472	
1216N★&	N	40,00	64,00	64,10	12,00	74
		1.575	2.520	2.524	.472	
1217★&	N	40,00	52,00	52,28	9,00	35
		1.575	2.047	2.058	.354	

For Illustration and Material Data See Technical Section

Designed For A Specific Application - Not Recommended For General Use ➡ Hydrodynamic Lip Design-CW ⬅ Hydrodynamic Lip Design-CCW & Flanged O.D.

* The U.S. customer service number is 877-4-TIMKEN. The Canadian customer service numbers are 800-565-4927 (English) and 800-565-0438 (French-Canadian). ★ Metric Seal

1000 SERIES (cont.)

Part No.	Lip Mat'l	Shaft Size	Hsg. Bore	Seal O.D.	Seal Width	Type/ Illus.
1873	S	1.562	2.320	2.326	.374	35
1883★%	S	52,00	67,00	67,30	7,00	#
		2.047	2.638	2.650	.276	
1884★	S	52,00	68,00	68,28	10,00	32
		2.047	2.677	2.688	.394	
1906	S	1.763	2.126	2.134	.382	31
1928★	S	57,00	81,00	81,10	9,00	47
		2.244	3.189	3.193	.354	
1932★	S	56,00	68,00	68,28	10,00	49
		2.205	2.677	2.688	.394	
1935★	S	63,00	90,00	90,10	7,00	47
		2.480	3.543	3.554	.276	
1936★	S	49,00	64,00	64,28	12,50	#
		1.929	2.520	2.531	.492	
1937★	S	47,00	64,00	64,28	14,00	#
		1.850	2.520	2.531	.551	
1938★	S	45,00	64,00	64,25	19,00	#
		1.772	2.520	2.530	.748	
1939★	S	45,00	64,00	64,26	13,00	#
		1.772	2.520	2.530	.512	
1940★➡	N	35,00	49,60	49,83	11,00	32
		1.378	1.953	1.962	.433	
1941★	S	50,00	77,50	77,70	9,00	47
		1.969	3.051	3.071	.354	
1943★	S	45,00	72,20	72,34	7,50	44
		1.772	2.843	2.848	.295	
*1944★➡	H	42,00	56,00	56,13	7,00	32
		1.654	2.205	2.210	.276	
1945★⬅	H	82,00	105,00	105,30	13,00	32
		3.228	4.134	4.146	.512	
*1946★	S	42,00	62,00	62,27	10,00	35
		1.654	2.441	2.452	.394	
1948★	S	50,00	68,00	68,28	8,00	35
		1.969	2.677	2.688	.315	
1949	S	1.875	2.441	2.445	.325	48
1950★	S	41,00	53,00	53,25	7,00	41
		1.614	2.087	2.096	.276	
1951★&	S	45,00	64,00	64,11	11,86	87
		1.772	2.520	2.524	.467	
1952	S	1.771	3.656	3.656	.282	54
1953★	N	42,00	60,00	60,22	7,04	32
		1.654	2.362	2.371	.277	
1955★	S	52,00	65,00	65,30	9,00	35
		2.047	2.559	2.571	.354	
1956★	S	48,00	62,00	62,10	24,00	#
		1.890	2.441	2.445	.945	
1958★	S	55,00	82,00	82,30	10,00	35
		2.165	3.228	3.240	.472	
1959	S	1.869	2.781	2.789	.354	32
1960★	S	50,00	70,00	70,23	9,00	47
		1.969	2.756	2.765	.354	
1962★&	S	40,00	52,00	52,12	8,50	78
		1.575	2.047	2.052	.335	
1963★➡	N	22,00	40,00	40,34	7,75	35
		.866	1.575	1.588	.305	
1964★	S	57,00	72,00	72,25	8,40	47
		2.244	2.835	2.844	.331	
1965★	V	36,00	60,00	60,20	8,00	48
		1.417	2.362	2.370	.315	
1966★➡	H	38,00	52,00	52,30	8,00	35
		1.496	2.047	2.059	.315	
1969★	S	48,00	63,00	63,09	9,00	47
		1.890	2.480	2.484	.354	
1970★	S	30,00	42,00	42,27	7,00	35
		1.181	1.654	1.664	.276	
1971★	S	50,00	64,00	64,10	6,50	47
		1.969	2.520	2.524	.256	
1973★	S	48,00	65,00	65,30	8,00	25
		1.890	2.559	2.571	.315	

1000 SERIES (cont.)

Part No.	Lip Mat'l	Shaft Size	Hsg. Bore	Seal O.D.	Seal Width	Type/ Illus.
1974★	S	50,00	67,00	67,27	11,00	97
		1.969	2.638	2.648	.433	
1975★	S	52,00	63,00	63,23	8,00	32
		2.047	2.480	2.489	.315	
1979★➡	N	45,00	75,00	75,10	12,00	47
		1.772	2.953	2.957	.472	
*1980★➡	H	35,00	50,00	50,25	10,00	32
		1.378	1.969	1.978	.394	
1981★	S	30,00	45,00	45,23	8,00	35
		1.181	1.772	1.781	.315	
1984★	S	57,00	67,00	67,11	6,00	25
		2.244	2.638	2.642	.236	
1985★	S	60,00	90,00	90,25	22,00	#
		2.362	3.543	3.553	.866	
1986★	S	72,00	88,00	88,25	8,00	48
		2.835	3.465	3.474	.315	
1987★	N	35,00	49,21	49,63	6,00	33
		1.378	1.937	1.954	.236	
1989★	S	28,60	43,00	43,15	6,50	47
		1.126	1.693	1.699	.256	
1990★➡	N	27,00	43,00	43,25	9,00	32
		1.063	1.693	1.703	.354	
1992★	S	45,00	65,00	65,10	5,00	47
		1.772	2.559	2.563	.197	
1993★	S	56,00	73,00	73,28	12,50	47
		2.205	2.874	2.885	.492	
1994★	S	48,00	70,00	70,28	10,00	32
		1.890	2.756	2.767	.394	
*1997★	S	45,00	62,00	62,10	10,16	#
		1.772	2.441	2.445	.400	
1999	S	1.625	2.251	2.255	.375	48
PSK-1		See Kit Section				
*SK1++	S	2.030	–	2.601	.295	#
*SK2++	S	2.010	–	2.876	.318	#

2000 SERIES

Part No.	Lip Mat'l	Shaft Size	Hsg. Bore	Seal O.D.	Seal Width	Type/ Illus.
*2000★	S	42,00	58,00	58,10	10,00	33
		1.654	2.283	2.287	.394	
2001★⬅	S	60,00	82,00	82,28	12,00	32
		2.362	3.228	3.239	.472	
2002★	S	54,00	65,00	65,28	12,50	47
		2.126	2.559	2.570	.492	
2003★	S	36,00	55,00	55,09	6,50	47
		1.417	2.165	2.169	.256	
2003N★	S	36,00	55,00	55,09	6,50	47
		1.417	2.165	2.169	.256	
2004★⬅	S	14,00	24,00	24,25	12,70	#
		.551	.945	.955	.500	
2007★➡	S	35,00	56,00	56,30	9,00	#
		1.378	2.205	2.217	.354	
2007N★➡	S	35,00	56,00	56,30	9,00	#
		1.378	2.205	2.217	.354	
2008★&	S	32,00	54,00	54,20	10,00	#
		1.260	2.126	2.134	.394	
2009★	N	38,00	63,00	63,12	10,00	#
		1.496	2.480	2.485	.394	
2011★➡	N	40,00	75,00	75,26	12,00	40
		1.575	2.953	2.963	.472	
2012★➡	V	43,00	55,00	55,20	6,00	32
		1.693	2.165	2.173	.236	
2012V★➡	V	43,00	55,00	55,20	6,00	32
		1.693	2.165	2.173	.236	
*2013★	S	45,00	62,00	62,30	12,00	32
		1.772	2.441	2.453	.472	
2016★⬅	S	30,00	45,00	45,20	15,00	#
		1.181	1.772	1.780	.591	
2025★	V	42,00	60,00	60,42	7,00	32
		1.654	2.362	2.379	.276	
2027★	S	15,00	24,00	24,20	5,00	35
		.591	.945	.953	.197	
2043	S	1.940	2.762	2.766	.500	47

For Illustration and Material Data See Technical Section
Designed For A Specific Application - Not Recommended For General Use ➡ Hydrodynamic Lip Design-CW ⬅ Hydrodynamic Lip Design-CCW ++ Not Sold Separately
% External Bore & Flanged O.D.
* The U.S. customer service number is 877-4-TIMKEN. The Canadian customer service numbers are 800-565-4927 (English) and 800-565-0438 (French-Canadian). ★ Metric Seal

2000 SERIES (cont.)

Part No.	Lip Mat'l	Shaft Size	Hsg. Bore	Seal O.D.	Seal Width	Type/ Illus.
*2054	S	3.187	4.625	4.630	.442	47
2055	S	3.468	4.626	4.631	.625	47
2064§	S	4.166	5.625	6.800	.210	#
2081⬅➡	S	2.843	3.939	3.944	.495	41
*2082⬅➡	S	4.166	5.502	5.506	.600	45
*2093H	H	4.000	4.562	4.568	.375	33
*2102	S	1.869	2.518	2.522	.437	#
*2108	S	2.500	4.003	4.008	.468	45
*2109	S	3.253	4.499	4.505	.468	41
2146	S	1.687	2.560	2.579	.375	#
*2151H	H	5.500	6.251	6.257	.500	25
*2155⬅➡	S	4.062	5.500	5.509	.597	#
*2175⬅	S	1.500	2.377	2.381	.500	47
*2177	S	2.598	3.999	4.004	.730	#
2194⬅	N	1.500	2.372	2.376	.420	88
*2205	S	1.500	2.249	2.254	.280	#
2207	S	1.815	2.562	2.566	.562	290
2218⬅	H	3.750	4.751	4.756	.500	47
2222&	S	2.750	3.773	3.781	.435	286
2260	V	3.125	3.936	3.943	.512	45
2261★⬅	V	*110,00*	*130,00*	*130,18*	*12,70*	32
		4.331	5.118	5.125	.500	
*2278	V	2.875	3.876	3.881	.468	#
*2279➡	H	2.500	3.500	3.505	.500	47
2286	S	2.201	3.519	3.523	.590	74
2287	S	.750	1.250	1.254	.280	274
2291	H	3.125	4.125	4.130	.500	41
*2297⬅	H	6.000	6.750	6.757	.500	25
2297V⬅	V	6.000	6.750	6.757	.500	25
2300	S	1.318	2.620	2.625	.875	#
*2326⬅	S	1.500	2.374	2.378	.500	47
*2326N⬅	N	1.500	2.374	2.378	.500	47
*2363	S	5.500	6.500	6.505	1.125	#
2377	V	3.750	4.501	4.506	.362	35
*2439	H	2.125	3.189	3.194	.468	47
2440★➡	N	*45,00*	*60,00*	*60,25*	*10,80*	69
		1.772	2.362	2.372	.425	
2443⬅	N	1.375	1.952	1.957	.500	25
2457⬅	N	2.125	2.880	2.885	.550	#
2465	S	1.680	2.500	2.506	1.535	79
*2499	S	3.270	3.655	3.660	.500	#
2503➡	N	1.100	1.572	1.578	.308	48
2503N➡	N	1.100	1.572	1.578	.308	48
2505	S	4.625	6.186	6.192	1.250	89
*2505V	V	4.625	6.186	6.192	1.250	89
2506&	S	1.558	2.372	2.376	1.500	79
*2515V	V	3.000	4.376	4.381	.760	#
*2523	S	2.125	3.125	3.130	.500	41
*2551⬅	S	1.187	1.713	1.718	.500	25
2628	H	6.204	7.328	7.336	.562	64
*2643N	N	2.500	3.548	3.553	.546	#
2655⬅	N	1.375	2.244	2.254	1.197	79
2658➡	H	1.609	2.435	2.441	.300	75
2658V	V	1.609	2.435	2.441	.300	75
2674	S	2.875	4.175	4.180	.812	89
*2689¶	S	1.875	2.877	2.865	.490	56
2689S	S	1.875	2.877	2.865	.490	25
2692➡	N	1.875	2.561	2.565	.528	76
*2699	S	3.250	6.125	6.149	.500	#
*2704	S	4.500	6.305	6.313	.954	#
*2756N&	N	2.375	3.875	3.881	1.060	74
*2757N&	N	2.375	4.498	4.504	1.060	74
2791	S	9.000	10.376	10.384	.625	33
2792	S	9.910	10.997	11.005	.625	33
*2796	S	1.500	2.372	2.376	.350	47
*2820★	S	*48,01*	*65,07*	*65,20*	*12,70*	#
		1.890	2.562	2.567	.500	
2822V	V	2.062	3.000	3.005	.375	41

2000 SERIES (cont.)

Part No.	Lip Mat'l	Shaft Size	Hsg. Bore	Seal O.D.	Seal Width	Type/ Illus.
*2826	S	1.875	2.873	2.877	.394	#
*2834	S	2.000	2.623	2.626	.580	#
*2854⬅	N	1.687	2.500	2.506	1.535	79
*2855	S	.748	1.499	1.504	.312	#
*2867V	V	3.753	4.720	4.730	.552	#
*2876&	S	1.558	2.372	2.376	.350	74
*2910	S	3.500	4.840	4.848	.897	#
2922➡	S	1.552	2.447	2.452	.500	86
2942➡	N	1.875	2.560	2.565	.406	47
2955➡	N	1.709	2.205	2.213	.292	71

3000 SERIES

Part No.	Lip Mat'l	Shaft Size	Hsg. Bore	Seal O.D.	Seal Width	Type/ Illus.
3016	S	5.875	8.001	8.007	.750	45
*3028V➡	V	1.875	2.758	2.762	.425	25
3051★➡	H	*42,00*	*55,00*	*55,12*	*8,00*	33
		1.654	2.165	2.170	.315	
3051N★➡	H	*42,00*	*55,00*	*55,12*	*8,00*	33
		1.654	2.165	2.170	.315	
3054	H	5.500	6.625	6.632	.670	41
*3054V	V	5.500	6.625	6.632	.670	41
*3061H	H	6.312	7.500	7.507	.690	41
*3061V	V	6.312	7.500	7.507	.690	41
*3072V	V	.562	1.124	1.128	.531	49
*3074V	V	.625	1.124	1.128	.531	49
*3075	S	.750	1.250	1.254	.437	282
3083➡	H	1.650	2.282	2.336	.768	48
3087	S	2.048	2.728	2.732	.590	#
3095➡	S	2.240	3.190	3.194	.450	69
*3098	S	5.500	8.494	8.501	1.062	#
3100	S	4.750	6.186	6.192	1.250	89
3103➡	S	2.180	3.190	3.194	.620	69
3116⬅	N	1.375	2.374	2.378	.500	71
3116N⬅	N	1.375	2.374	2.378	.500	71
*3120N	N	1.500	2.374	2.378	.250	47
*3123	S	6.956	8.625	8.633	.750	#
*3124%	S	6.875	8.543	8.543	.825	46
*3126	S	1.000	2.875	2.879	.468	41
3136N⬅➡	N	2.500	4.938	4.943	.500	47
3143N&	N	3.000	5.500	5.506	.531	74
*3145	S	1.326	2.226	2.231	.500	#
3173	N	1.937	2.686	2.690	.304	48
3186¶	S	1.875	3.150	3.146	.930	59
3195¶	S	1.875	3.150	3.146	.930	59
3199	S	1.250	1.955	1.960	.435	48
*3203	S	4.375	5.501	5.506	.562	47
*3204	S	3.000	4.003	4.008	.468	#
3210	S	2.437	3.624	3.628	.375	49
3214	S	1.365	1.955	1.960	.435	48
3227➡	N	1.748	2.623	2.627	.330	83
*3237⬅➡	S	1.399	2.292	2.296	.460	33
*3241	N	1.178	1.654	1.659	.276	33
*3275	S	4.500	5.501	5.506	.562	47
*3276	S	6.500	7.501	7.508	.812	#
*3278	V	2.375	3.500	3.505	.730	#
3292	S	5.375	6.875	6.882	1.000	89
*3329	S	1.875	2.875	2.879	.500	#
*3339	S	2.875	3.876	3.881	.468	44
3341⬅	H	4.812	5.544	5.552	.535	100
3348★⬅➡	S	*32,99*	*51,92*	*52,02*	*12,45*	47
		1.299	2.044	2.048	.490	
*3350	N	2.625	3.625	3.630	.600	#
3357★&	S	*38,00*	*52,04*	*52,15*	*6,35*	283
		1.496	2.049	2.053	.250	
*3369	S	4.250	5.125	5.130	.360	#
3385⬅➡	S	3.180	4.180	4.185	.750	74
3392★⬅➡	S	*40,00*	*55,00*	*55,17*	*9,60*	47
		1.575	2.165	2.172	.378	
3393⬅	V	2.375	3.000	3.013	.400	32
3394➡	H	1.440	2.061	2.075	.315	32

For Illustration and Material Data See Technical Section
Designed For A Specific Application - Not Recommended For General Use ➡ Hydrodynamic Lip Design-CW ⬅ Hydrodynamic Lip Design-CCW
⬅➡ Hydrodynamic Lip Design-Bidirectional % External Bore & Flanged O.D. ¶ Expandable O.D. § Inside Diameter-Rides On Ball
* The U.S. customer service number is 877-4-TIMKEN. The Canadian customer service numbers are 800-565-4927 (English) and 800-565-0438 (French-Canadian). ★ Metric Seal

3000 SERIES (cont.)

Part No.	Lip Mat'l	Shaft Size	Hsg. Bore	Seal O.D.	Seal Width	Type/ Illus.
3395	**S**	**1.437**	**2.061**	**2.066**	**.312**	**47**
*3402	S	5.500	7.625	7.631	1.250	#
3404➡	H	1.996	2.743	2.751	.325	75
*3428	S	1.500	2.327	2.332	.406	204
*3438N	N	1.250	2.000	2.004	.437	#
*3439N	N	1.562	2.375	2.379	.500	#
*3440V	V	2.625	3.623	3.628	.468	#
*3441V	V	2.875	4.003	4.008	.468	#
*3447&	S	1.940	2.500	2.505	.250	286
3459★⬅➡	N	*40,00*	*58,00*	*58,14*	*9,00*	74
		1.575	2.283	2.289	.354	
3476★➡	N	*32,00*	*47,00*	*47,24*	*10,00*	32
		1.260	1.850	1.860	.394	
*3492	T	5.000	5.751	5.756	.500	48
3492V	V	5.000	5.751	5.756	.500	48
*3501V	V	2.420	3.349	3.355	.375	69
*3502	S	9.477	11.375	11.383	.750	45
*3503%	S	9.375	11.273	11.273	.825	#
*3513	S	1.940	2.812	2.816	.400	#
*3517➡	S	1.763	2.409	2.416	.380	47
*3517V➡	V	1.763	2.409	2.416	.380	47
3543★⬅➡	H	*35,00*	*54,89*	*55,04*	*14,66*	57
		1.378	2.161	2.167	.577	
3553&	S	2.201	2.735	2.741	.197	284
*3575V	V	3.500	4.376	4.381	.500	#
3583➡	H	1.748	3.229	3.238	.335	83
*3590	N	3.346	4.135	4.148	.465	#
3591	N	2.750	5.501	5.506	1.266	90
3592	N	3.000	5.501	5.506	1.266	90
*3594	S	8.125	9.371	9.379	.425	#
3604➡	V	1.812	2.777	2.783	.575	86
3606★⬅➡	N	*47,00*	*69,00*	*69,14*	*10,10*	7S
		1.850	2.717	2.722	.398	
*3607★⬅➡	N	*30,00*	*58,00*	*63,50*	*13,90*	57
		1.181	2.283	2.500	.547	
*3609★	S	*40,00*	*52,00*	*52,12*	*8,00*	47
		1.575	2.047	2.052	.315	
3618➡	S	1.812	2.623	2.627	.615	86
*3620	S	5.875	7.125	7.133	.500	#
3622⬅➡	S	1.652	2.518	2.524	.394	74
*3623	V	2.937	4.003	4.008	.697	#
*3624	S	8.000	9.500	9.508	.860	#
*3633	S	2.000	2.561	2.566	.220	#
3638➡	N	1.125	1.624	1.628	.190	48
3655★➡	N	*35,00*	*52,00*	*52,35*	*7,75*	32
		1.378	2.047	2.061	.305	
3667&	S	.690	.997	1.003	.295	271
3677&	S	1.500	1.989	1.993	.285	287
*3680	S	1.500	2.374	2.378	.710	#
*3689★	V	*233,00*	*272,00*	*272,26*	*15,88*	#
		9.173	10.709	10.719	.625	
3698⬅	H	2.988	3.740	3.748	.374	32
*3700➡	S	1.812	3.000	3.005	.455	86
*3707	S	2.500	3.500	3.505	.540	47
3723★	S	*55,00*	*70,00*	*70,10*	*10,26*	66
		2.165	2.756	2.760	.404	
3732S➡	S	1.062	1.575	1.581	.250	48
3743★	S	*50,00*	*65,00*	*65,10*	*14,00*	66
		1.969	2.559	2.563	.551	
3747⬅➡	S	1.703	3.084	3.090	.500	69
*3757V	V	.625	1.124	1.129	.250	35
*3765➡	H	2.367	3.366	3.374	.257	48
3771★➡	H	*35,00*	*50,00*	*50,34*	*7,00*	35
		1.378	1.969	1.982	.276	
3772★⬅	H	*88,00*	*108,00*	*108,36*	*11,10*	35
		3.465	4.252	4.266	.437	
3774★➡	H	*42,00*	*56,00*	*56,34*	*7,00*	35
		1.654	2.205	2.218	.276	
*3776S	S	7.908	9.528	9.535	.960	#

3000 SERIES (cont.)

Part No.	Lip Mat'l	Shaft Size	Hsg. Bore	Seal O.D.	Seal Width	Type/ Illus.
*3782	H	5.000	6.001	6.006	.500	#
3783	H	2.875	3.623	3.628	.500	65
3794	S	2.010	2.650	2.655	.363	49
*3802	S	.737	1.375	1.382	.312	#
3807	H	6.328	7.329	7.336	.500	64
3813	H	2.625	3.695	3.700	.500	64
*3814N	N	3.500	5.250	5.256	.500	#
3816★&	S	*18,00*	*30,00*	*30,10*	*6,70*	271
		.709	1.181	1.185	.264	
*3873	S	1.550	2.686	2.690	.500	#
3893V	V	3.750	4.750	4.756	.500	45
3894V	V	2.500	3.499	3.505	.500	48
3896➡	S	1.940	2.909	2.914	.520	76
3905&	N	3.000	4.938	4.943	.740	76
3907★⬅➡	N	*30,00*	*58,00*	*58,09*	*9,50*	57
		1.181	2.283	2.287	.374	
3909⬅	V	3.625	4.240	4.256	.390	35
3942&	S	2.500	3.226	3.231	.190	284
3945⬅➡	N	2.330	3.000	3.005	.400	48
3946⬅➡	S	1.875	2.750	2.754	.500	86
*3948	S	2.201	2.735	2.741	.197	#
*3966★	S	*45,00*	*64,00*	*64,11*	*16,40*	#
		1.772	2.520	2.524	.646	
*3967★	S	*40,00*	*52,00*	*52,12*	*7,50*	#
		1.575	2.047	2.052	.295	
*3983⬅➡	S	1.618	2.574	2.579	.460	47
*3985★	S	*45,00*	*65,00*	*65,10*	*5,00*	#
		1.772	2.559	2.563	.197	

4000 SERIES

Part No.	Lip Mat'l	Shaft Size	Hsg. Bore	Seal O.D.	Seal Width	Type/ Illus.
*4012	S	2.875	4.003	4.008	.250	#
4019N⬅➡	N	2.432	3.070	3.075	.227	47
*4020	S	1.687	2.875	2.885	.622	#
*4026	N	.875	1.575	1.584	.669	#
*4035N	N	2.937	4.939	4.944	1.250	90
*4036N	N	2.250	4.064	4.069	1.092	90
*4037	N	2.625	4.064	4.069	.990	#
*4038N	N	2.375	4.064	4.069	1.092	90
4040N★⬅	N	*35,00*	*53,26*	*53,67*	*7,75*	32
		1.378	2.097	2.113	.305	
*4048N	N	5.000	7.500	7.507	.875	#
*4051	S	1.875	2.901	2.907	.315	#
*4052★➡	N	*35,00*	*52,00*	*52,13*	*8,00*	47
		1.378	2.047	2.052	.315	
4072➡	N	1.787	3.229	3.238	.335	83
4072N➡	N	1.787	3.229	3.238	.335	83
*4075	H	1.771	2.500	2.504	.359	#
*4084	S	.739	1.250	1.254	.407	#
4099&	S	1.673	2.162	2.166	.285	287
*4101	S	2.496	3.243	3.248	.420	#
4122	S	2.882	3.431	3.436	.291	47
*4127N	N	.590	.997	1.006	.200	34
4131&	S	2.312	3.000	3.004	.375	287
*4139	S	4.750	6.619	6.625	1.150	#
4141	N	1.574	2.676	2.683	.500	#
4143	N	1.630	2.415	2.441	.492	#
*4143N	N	2.938	4.003	4.008	.619	#
*4144V	V	5.000	6.997	7.003	1.093	90
4148&	S	2.000	2.623	2.627	.280	286
*4150N★⬅➡	N	*35,00*	*56,90*	*57,05*	*18,64*	#
		1.378	2.240	2.246	.734	
*4155	N	2.375	3.350	3.355	.625	#
*4156H	H	3.125	4.125	4.130	.500	#
4160	S	2.420	3.000	3.005	.382	281
4162%	S	2.062	2.937	3.034	.340	200E
*4165⬅	V	6.107	6.750	6.757	.500	#
*4165V⬅	V	6.107	6.750	6.757	.500	#
*4173	N	3.574	4.756	4.761	.550	#

For Illustration and Material Data See Technical Section
Designed For A Specific Application - Not Recommended For General Use ➡ Hydrodynamic Lip Design-CW ⬅ Hydrodynamic Lip Design-CCW
⬅➡ Hydrodynamic Lip Design-Bidirectional % External Bore & Flanged O.D.
* The U.S. customer service number is 877-4-TIMKEN. The Canadian customer service numbers are 800-565-4927 (English) and 800-565-0438 (French-Canadian). ★ Metric Seal

4000 SERIES (cont.)

Part No.	Lip Mat'l	Shaft Size	Hsg. Bore	Seal O.D.	Seal Width	Type/ Illus.
4175★	S	*40,00*	*52,00*	*52,22*	*9,00*	#
		1.575	2.047	2.056	.354	
*4176	S	2.812	4.176	4.181	.551	#
*4185	S	2.420	3.552	3.558	.336	#
4189H&	H	1.996	3.111	3.120	.344	75
*4195	S	2.000	2.562	2.566	.225	#
*4203⬅➡	S	3.655	4.620	4.631	.270	#
*4235%	S	4.000	5.755	5.822	.562	#
4244⬅➡	S	1.552	2.750	2.755	.415	72
4249&	S	1.809	2.361	2.365	.380	287
4250⬅➡	S	2.500	3.303	3.307	.465	74
*4269	S	4.000	5.696	5.700	.850	74
*4273	S	16.250	18.000	18.010	.750	#
4278&	V	1.812	3.091	3.096	.485	86
*4291	S	4.375	5.375	–	.500	#
4291V%	V	4.375	5.375	5.425	.500	#
*4302⬅➡	S	1.750	3.036	3.040	.500	47
4307V★⬅	V	*76,00*	*92,00*	*92,28*	*9,50*	32
		2.992	3.622	3.633	.374	
*4310	S	1.875	2.803	2.808	.433	285
4333N⬅	N	1.886	2.699	2.704	.350	79
*4340V	V	3.875	4.750	4.756	.500	#
*4346➡	S	1.037	1.575	1.579	.333	#
4353	V	7.375	9.615	9.622	.979	#
*4354V	V	6.625	9.615	9.622	.979	#
4359V★⬅	V	*95,00*	*115,00*	*115,31*	*12,50*	32
		3.740	4.528	4.540	.492	
4370N⬅	N	1.503	2.376	2.383	.420	88
*4400★	N	*18,00*	*28,00*	*28,20*	*6,00*	34
		.709	1.102	1.110	.236	
*4401★	N	*18,00*	*32,00*	*32,23*	*12,70*	#
		.709	1.260	1.269	.500	
*4403	S	2.000	2.745	2.749	.230	#
*4409N	N	3.500	5.906	7.500	.600	#
*4419	N	1.375	2.373	2.378	.500	#
*4431	S	1.875	3.160	3.165	.530	72
*4431N	N	1.875	3.160	3.165	.530	72
*4431V	V	1.875	3.160	3.165	.530	72
*4434	S	1.552	3.160	3.165	.530	72
*4434N	N	1.552	3.160	3.165	.530	72
4458V	V	.984	1.499	1.504	.250	#
4462N	N	.000	2.097	2.109	.938	#
*4470V	V	3.125	4.003	4.008	.500	#
*4489V	V	3.750	4.499	4.506	.468	96
*4490	V	2.750	4.003	4.008	.500	#
4491	V	3.500	4.501	4.506	.500	#
4492	V	2.750	3.543	3.548	.500	#
*4494V⬅➡	V	5.187	6.500	6.515	.625	#
4503N⬅	N	1.886	2.750	2.765	1.375	79
*4512⬅➡	N	2.375	4.498	4.504	.860	#
4525V	V	2.500	4.035	4.040	.634	87
4528N★⬅	N	*48,00*	*65,00*	*65,15*	*24,50*	66
		1.890	2.559	2.565	.965	
4529N➡	N	1.375	2.047	2.052	.330	68
4530⬅	N	1.502	2.126	2.132	.492	96
4532N⬅	N	1.375	3.542	3.549	.397	93
4539V	V	2.367	3.366	3.374	.257	75
4539H➡	H	2.367	3.366	3.374	.257	75
4543V➡	V	3.250	4.249	4.260	.662	#
4544V➡	V	3.253	5.500	5.511	.630	#
4561V⬅	V	2.503	3.428	3.439	.709	#
4562V➡	V	3.003	4.937	4.948	.662	#
4563V➡	V	2.938	3.937	3.947	.552	#
4564V➡	V	2.748	3.876	3.886	.552	#
4577	N	1.874	2.676	2.682	.410	#
4583⬅	N	1.502	2.377	2.381	.374	86
*4591	S	4.647	6.309	6.318	.625	#

4000 SERIES (cont.)

Part No.	Lip Mat'l	Shaft Size	Hsg. Bore	Seal O.D.	Seal Width	Type/ Illus.
*4596★	N	*32,00*	*43,00*	*43,28*	*4,00*	35
		1.260	1.693	1.704	.157	
*4596V	V	3.250	–	–	.656	#
4598➡	N	2.000	2.878	2.882	.340	83
*4599H★➡	H	*60,00*	*85,50*	*85,70*	*7,00*	#
		2.362	3.366	3.374	.276	
*4602V	V	6.142	8.000	8.007	.658	#
*4603V	V	6.772	9.000	9.007	.658	#
*4610	S	4.687	6.850	6.865	.551	35
4613N⬅➡	N	1.377	2.874	2.881	.693	57
4614N⬅➡	N	1.377	2.162	2.167	.744	87
4615V★➡	V	*42,00*	*67,00*	*67,13*	*7,16*	83
		1.654	2.638	2.643	.282	
*4616V★	V	*16,00*	*44,75*	*44,96*	*9,00*	#
		.630	1.762	1.770	.354	
*4624N&	N	2.503	3.629	3.633	.900	86
4624V&	V	2.503	3.629	3.633	.900	86
4635	H	2.141	3.484	3.493	.622	#
4635V	V	2.141	3.484	3.493	.329	#
*4635H➡	H	2.141	3.484	3.493	.329	#
4638N	N	1.375	1.982	1.989	.192	#
*4654N⬅	N	2.000	2.995	3.003	.438	#
*4655N➡	N	1.375	1.982	1.989	.312	48
*4662V★	V	*16,00*	*27,23*	*27,33*	*9,00*	47
		.630	1.072	1.076	.354	
*4670N⬅	N	2.503	3.500	3.504	.450	#
4674N⬅➡	N	1.605	2.795	2.804	.364	#
4701	N	.408	1.004	.102	.208	49
4701N	N	.408	1.004	1.008	.208	49
*4713V⬅➡	V	4.000	4.999	5.004	.469	#
*4738N⬅➡	N	1.190	1.969	1.975	.261	48
*4738V⬅➡	V	1.190	1.969	1.975	.312	48
4739	S	2.000	2.561	2.565	.250	282
4740	S	2.180	2.999	3.004	.250	282
4741⬅	N	2.200	3.022	3.028	.422	#
*4748V⬅➡	V	1.190	1.889	1.892	.651	#
4762N⬅➡	N	1.618	2.841	2.849	.500	74
4763S	S	1.625	2.562	2.566	.437	#
4764⬅	N	1.598	2.476	2.483	.420	86
4765⬅	N	1.598	2.476	2.483	.350	79
*4766S	S	10.820	12.000	12.015	.590	#
*4771S⬅➡	S	1.750	2.436	2.441	.300	#
*4789S★⬅➡	S	*90,00*	*115,00*	*115,14*	*17,12*	#
		3.543	4.528	4.533	.674	
4795V⬅➡	V	1.399	2.482	2.750	.310	74
4810V➡	V	3.003	3.751	3.761	.570	#
4813V➡	V	1.178	2.447	2.452	.500	86
4857⬅➡	V	1.400	2.282	2.288	.547	86
4874N⬅	N	2.748	3.543	3.555	.591	#
4875N➡	N	3.250	4.249	4.282	.650	#
4876N➡	N	2.748	5.500	5.512	.850	#
4889	V	1.562	2.833	2.840	.493	#
4890	V	1.562	2.873	2.880	.493	#
4898★	S	*52,00*	*66,00*	*66,12*	*7,50*	66
		2.047	2.598	2.603	.295	
4899★	S	*56,00*	*75,00*	*75,13*	*6,50*	66
		2.205	2.953	2.958	.256	
4901★⬅➡	N	*35,00*	*62,00*	*62,28*	*8,00*	40
		1.378	2.441	2.452	.315	
4904★	S	*49,00*	*62,00*	*62,15*	*8,00*	66
		1.929	2.441	2.447	.315	
*4905★	S	*56,00*	*76,00*	*76,15*	*11,50*	72
		2.205	2.992	2.998	.453	
4918	N	1.787	3.228	3.238	.335	83
4934	N	1.503	2.374	2.379	.374	79
*4936V⬅	V	3.750	4.751	4.756	.500	#
4941V	V	1.552	3.160	3.165	.608	#
4950	N	1.748	2.619	2.627	.330	88
4981V	V	1.685	2.500	2.506	.421	#

For Illustration and Material Data See Technical Section
Designed For A Specific Application - Not Recommended For General Use ➡ Hydrodynamic Lip Design-CW ⬅ Hydrodynamic Lip Design-CCW
⬅➡ Hydrodynamic Lip Design-Bidirectional % External Bore & Flanged O.D.
* The U.S. customer service number is 877-4-TIMKEN. The Canadian customer service numbers are 800-565-4927 (English) and 800-565-0438 (French-Canadian). ★ Metric Seal

Part No.	Lip Mat'l	Shaft Size	Hsg. Bore	Seal O.D.	Seal Width	Type/ Illus.
4000 SERIES (cont.)						
4989	S	1.437	2.441	2.445	.374	#
4990★	S	*52,00*	*68,00*	*68,28*	*7,00*	281
		2.047	2.677	2.688	.276	
5000 SERIES						
5000		See Kit Section				
5001		See Kit Section				
5008		See Kit Section				
5010		See Kit Section				
5015		See Kit Section				
5026		See Kit Section				
5028		See Kit Section				
5033		See Kit Section				
5039		See Kit Section				
5045		See Kit Section				
5065		See Kit Section				
5066		See Kit Section				
5068		See Kit Section				
5070	F	1.803	2.965	2.969	.250	29
5071		See Kit Section				
5072		See Kit Section				
5073		See Kit Section				
5075		See Kit Section				
5076		See Kit Section				
5077		See Kit Section				
5079		See Kit Section				
5082		See Kit Section				
5084		See Kit Section				
5089		See Kit Section				
5092		See Kit Section				
5095		See Kit Section				
5100		See Kit Section				
5106		See Kit Section				
5108		See Kit Section				
5109	S	2.496	3.245	3.248	.485	#
5111		See Kit Section				
5111S	S	.000	.000	.000	.000	#
5112		See Kit Section				
5112S	S	.000	.000	.000	.000	#
5113	S	2.000	2.745	2.749	.230	203
*5114	S	1.687	2.560	2.579	.375	#
5115➡	S	1.500	2.249	2.254	.250	47
5116		See Kit Section				
5117		See Kit Section				
5118		See Kit Section				
5119	S	2.375	3.265	3.270	.495	49
5120		See Kit Section				
5121	S	1.940	2.622	2.626	.580	281
5123	S	2.562	3.090	3.095	.375	280
5124	S	1.326	2.226	2.247	.500	48
*5125&	S	2.000	2.623	2.627	.635	#
5126&	S	1.875	2.813	2.817	.500	74
5128N	N	3.375	3.948	3.955	.375	32
5131⬅➡	S	1.318	2.280	2.286	.906	#
5133	V	1.812	2.562	2.566	.312	48
5146		See Kit Section				
5147		See Kit Section				
5160		See Kit Section				
5161		See Kit Section				
5163		See Kit Section				
5164		See Kit Section				
5166		See Kit Section				
5167		See Kit Section				
5168		See Kit Section				
5169		See Kit Section				
5170		See Kit Section				
5172		See Kit Section				
5175		See Kit Section				

Part No.	Lip Mat'l	Shaft Size	Hsg. Bore	Seal O.D.	Seal Width	Type/ Illus.
5000 SERIES (cont.)						
5185		See Kit Section				
5188		See Kit Section				
5189		See Kit Section				
5199		See Kit Section				
5200		See Kit Section				
5201		See Kit Section				
5202		See Kit Section				
5203		See Kit Section				
5204		See Kit Section				
5205		See Kit Section				
5206		See Kit Section				
5207		See Kit Section				
5208		See Kit Section				
5210★⑤	N	*33,00*	*89,90*	*89,60*	*40,00*	35
		1.299	3.539	3.528	1.575	
5227		See Kit Section				
5228		See Kit Section				
5229		See Kit Section				
5273		See Kit Section				
5274		See Kit Section				
5276		See Kit Section				
5277		See Kit Section				
5278		See Kit Section				
5279		See Kit Section				
5287		See Kit Section				
5288⬅	T	2.375	3.000	3.013	.394	#
5290		See Kit Section				
5302		See Kit Section				
5313		See Kit Section				
5327		See Kit Section				
5329		See Kit Section				
5330		See Kit Section				
5331		See Kit Section				
5332		See Kit Section				
5336		See Kit Section				
5346		See Kit Section				
5347		See Kit Section				
5361		See Kit Section				
5364		See Kit Section				
5373		See Kit Section				
5376		See Kit Section				
5377		See Kit Section				
5381		See Kit Section				
5382		See Kit Section				
5383		See Kit Section				
5384		See Kit Section				
5388		See Kit Section				
5390		See Kit Section				
5397		See Kit Section				
5399		See Kit Section				
5401		See Kit Section				
5403		See Kit Section				
5405		See Kit Section				
5406		See Kit Section				
5408		See Kit Section				
5410		See Kit Section				
5414		See Kit Section				
5419		See Kit Section				
5422		See Kit Section				
5424		See Kit Section				
5436		See Kit Section				
5441		See Kit Section				
5443		See Kit Section				
5452		See Kit Section				
5453		See Kit Section				
5458		See Kit Section				
5460		See Kit Section				
5461		See Kit Section				

For Illustration and Material Data See Technical Section
Designed For A Specific Application - Not Recommended For General Use ➡ Hydrodynamic Lip Design-CW ⬅ Hydrodynamic Lip Design-CCW
⬅➡ Hydrodynamic Lip Design-Bidirectional ⑤ Seal & Installation Sleeve & Flanged O.D.
* The U.S. customer service number is 877-4-TIMKEN. The Canadian customer service numbers are 800-565-4927 (English) and 800-565-0438 (French-Canadian). ★ Metric Seal

5000 SERIES (cont.)

Part No.	Lip Mat'l	Shaft Size	Hsg. Bore	Seal O.D.	Seal Width	Type/ Illus.
5462		See Kit Section				
5465		See Kit Section				
5471		See Kit Section				
5472		See Kit Section				
5473		See Kit Section				
5475		See Kit Section				
5476		See Kit Section				
5479		See Kit Section				
5481		See Kit Section				
5483		See Kit Section				
5487		See Kit Section				
5488		See Kit Section				
5494		See Kit Section				
5495		See Kit Section				
5499		See Kit Section				
5509		See Kit Section				
5518		See Kit Section				
5520		See Kit Section				
5521		See Kit Section				
5526		See Kit Section				
5527		See Kit Section				
5531		See Kit Section				
5532		See Kit Section				
5537		See Kit Section				
5538		See Kit Section				
5550		See Kit Section				
5551		See Kit Section				
5563		See Kit Section				
5567		See Kit Section				
5573		See Kit Section				
5575		See Kit Section				
5576		See Kit Section				
5578		See Kit Section				
5581		See Kit Section				
5584		See Kit Section				
5588		See Kit Section				
5589		See Kit Section				
5591		See Kit Section				
5592		See Kit Section				
5593		See Kit Section				
5594		See Kit Section				
5596		See Kit Section				
5599		See Kit Section				
5601		See Kit Section				
5602		See Kit Section				
5603		See Kit Section				
5604		See Kit Section				
5609		See Kit Section				
5613		See Kit Section				
5615		See Kit Section				
5624		See Kit Section				
5625		See Kit Section				
5629		See Kit Section				
5632		See Kit Section				
5634		See Kit Section				
5637		See Kit Section				
5643		See Kit Section				
5645		See Kit Section				
5649		See Kit Section				
5650		See Kit Section				
5657		See Kit Section				
5665		See Kit Section				
5666		See Kit Section				
5667		See Kit Section				
5682		See Kit Section				
*5683++	S	1.250	1.752	1.756	.300	32
*5684++	S	1.250	1.752	1.756	.399	32
5685		See Kit Section				

5000 SERIES (cont.)

Part No.	Lip Mat'l	Shaft Size	Hsg. Bore	Seal O.D.	Seal Width	Type/ Illus.
5686		See Kit Section				
5690		See Kit Section				
5694		See Kit Section				
5695		See Kit Section				
5696		See Kit Section				
5697		See Kit Section				
5698		See Kit Section				
5699		See Kit Section				
5700		See Kit Section				
5711	S	1.750	2.983	2.987	.438	41
*5721	T	5.000	5.999	6.006	.717	90
5722		See Kit Section				
5727	F	1.625	2.722	2.727	.406	205
5751	L	3.125	4.562	4.567	1.198	34
5756	F	2.062	3.151	3.156	.240	29
5778	N	1.552	3.160	3.165	.530	72
5778V	V	1.552	3.160	3.165	.645	72
5796	L	1.562	2.686	2.690	.375	201
5797	L	2.031	–	4.156	.781	#
5827	L	1.750	2.750	2.754	.484	201
5836	L	1.734	2.726	2.730	.500	201
5857	F	1.000	1.499	1.503	.312	29
5865	L	2.000	2.750	2.754	.187	4L
5872S	S	1.375	2.000	2.004	.320	45
5877	L	2.062	2.842	2.846	.450	5L
*5921	L	2.250	4.010	4.015	.843	1L
5924	L	2.312	3.313	3.318	.375	4L
*5957S	S	2.470	3.063	3.187	.510	273
*5961	L	3.500	5.750	5.756	.875	91
5965%	L	3.500	4.437	4.437	.437	8L
*5970	F	1.875	2.995	3.000	.375	29
5976S	S	.875	1.245	1.256	.187	34

6000 SERIES

Part No.	Lip Mat'l	Shaft Size	Hsg. Bore	Seal O.D.	Seal Width	Type/ Illus.
*6050	S	3.125	4.125	4.130	1.750	33
6064	F	1.875	2.965	2.969	.250	29
6074	F	1.937	3.622	3.627	.375	29
6077	S	2.062	–	4.735	.468	#
*6081	F	2.625	3.350	3.355	.453	29
*6082	F	2.250	3.061	3.066	.437	29
*6084	L	1.687	2.279	2.283	.500	5L
6090S	S	2.000	2.630	2.750	.562	273
6101	F	1.718	2.996	3.000	.375	29
*6110	F	1.875	2.718	2.722	.468	29
6127	L	1.875	4.010	4.014	1.000	31
6163S	S	2.000	2.875	2.879	.703	21
*6180	S	2.125	3.180	3.184	.781	#
6186	L	2.187	3.189	3.194	.718	1L
6200	L	1.375	2.250	2.252	1.062	9L
*6214	L	2.375	3.481	3.486	.663	3L
6241S	S	1.375	2.437	2.441	.250	48
*6245S	S	3.500	4.600	6.625	.531	#
6270	S	3.937	5.371	5.377	.906	21
6283S	S	1.610	2.500	2.531	.300	26
*6309	S	2.187	4.420	4.520	.687	39
6312%	L	1.500	2.187	2.187	.500	8L
6324S	S	.968	1.500	1.507	.187	34
6329S	S	4.687	5.751	5.756	.750	7S
6336S%	S	1.562	2.684	2.701	.250	26
*6340	S	1.375	2.000	2.004	.375	45
*6356	F	1.625	2.448	2.502	.250	29
6357S	S	.796	1.499	1.503	.625	92
6358⬅➡	S	3.187	4.625	4.630	.442	47
6370N★	N	*32,99*	*46,43*	*46,53*	*9,53*	33
		1.299	1.828	1.832	.375	
6380	F	2.125	3.436	3.440	.625	29
*6385	F	.875	1.575	1.750	.281	29
6389	F	2.125	3.126	3.131	.484	29

For Illustration and Material Data See Technical Section

Designed For A Specific Application - Not Recommended For General Use ⬅➡ Hydrodynamic Lip Design-Bidirectional ++ Not Sold Separately % External Bore

* The U.S. customer service number is 877-4-TIMKEN. The Canadian customer service numbers are 800-565-4927 (English) and 800-565-0438 (French-Canadian). ★ Metric Seal

6000 SERIES (cont.)

Part No.	Lip Mat'l	Shaft Size	Hsg. Bore	Seal O.D.	Seal Width	Type/ Illus.
*6402S	S	1.812	2.250	2.258	.312	35
*6405	S	2.625	–	5.030	.200	#
6426	L	1.500	2.502	2.506	.375	4L
*6442S	S	3.000	3.752	3.760	.375	35
6460S	S	1.875	2.758	2.762	.500	41
*6465B++	F	2.000	2.651	4.562	.562	#
*6469	F	2.000	–	4.562	.562	#
*6477S	S	3.226	–	8.250	.518	#
*6479	S	2.860	–	6.460	.520	#
*6480	S	3.125	–	7.500	.531	#
*6481	N	3.125	7.000	8.250	1.003	51
6481S	S	3.125	7.000	8.250	1.003	51
*6495S	S	3.250	4.125	4.130	.937	9S
*6505S	S	3.125	5.778	8.125	.571	#
6522S	S	.984	1.500	1.508	.410	34
*6532S	S	2.687	3.251	3.256	.578	273
*6542%	S	2.687	3.062	3.062	.187	36
6545	F	1.500	2.062	2.066	.250	21
6547	L	1.875	2.996	3.001	.375	201
6565N	N	4.125	4.999	5.004	.468	41
6575S	S	2.474	3.543	3.548	.285	200
6584S&	S	3.250	4.500	4.507	.718	74
6590S	S	2.093	2.716	2.721	.406	204
6597S	S	1.375	1.829	1.837	.187	34
*6603	F	3.125	4.562	4.567	.687	205
6612S	S	3.500	5.250	5.258	.562	#
*6622	S	1.375	1.828	1.839	.255	34
6626S	S	2.125	2.875	2.879	.312	4S
6635S	S	4.375	6.064	6.071	.625	45
6636S	S	2.187	3.187	3.194	.687	35
6638S	S	3.500	4.841	4.848	.875	#
6643S	S	2.750	–	6.200	.700	52
6644	L	3.125	4.562	4.567	.760	5L
6649	S	3.125	–	8.250	.571	52
6663S	S	4.750	6.618	6.625	1.141	89
6668S	S	1.375	1.875	1.878	.187	33
*6690	S	4.937	6.250	6.256	–	#
*6701	S	4.740	–	7.575	.410	#
*6701SS0	S	4.740	–	7.625	.410	#
6703S	S	1.750	2.250	2.258	.187	35
6704	L	1.125	1.874	1.878	.625	1L
6712NA➡	N	1.875	2.758	2.762	.425	74
*6754S	S	3.125	4.049	4.054	.437	45
6759S	S	1.500	1.997	2.001	.531	1S
6760S	S	1.375	2.062	2.072	.250	35
*6764S	S	3.125	–	8.250	.500	#
6780S	S	2.875	4.125	4.130	.812	21
6781	L	1.796	2.725	2.730	.500	201
6785★	F	*62,99*	*84,07*	*84,23*	*12,70*	35
		2.480	3.310	3.316	.500	
*6792	N	.625	1.000	1.004	.156	4S
6808N	N	1.875	3.160	3.165	.562	45
6815&	S	1.940	2.500	2.505	.250	286
6818	S	1.739	3.000	3.008	.500	71
6832S	S	1.125	1.935	1.942	.625	204
6835S	S	.750	1.250	1.254	.312	33
6840S	S	1.730	2.336	2.340	.250	4S
*6846S	S	2.640	4.450	4.490	.250	#
6847S	S	1.000	1.250	1.254	.536	#
*6855N	N	1.000	2.812	2.817	1.156	1S
6859S	S	1.247	1.687	1.691	.312	33
*6860S	S	2.500	3.350	3.355	.718	#
6863S	S	.437	.999	1.007	.250	35
6864S	S	4.050	5.501	5.506	.671	45
6872S	S	5.500	6.312	6.316	1.250	47
6873S	S	5.500	6.500	6.505	1.125	43
6879H	H	2.125	2.875	2.879	.375	33
6886S	S	4.625	6.622	6.629	1.093	21

6000 SERIES (cont.)

Part No.	Lip Mat'l	Shaft Size	Hsg. Bore	Seal O.D.	Seal Width	Type/ Illus.
*6897	S	3.125	–	8.250	.925	#
6906S	S	1.250	1.968	1.972	.468	204
*6910S	S	1.880	2.398	2.414	.250	35
*6922	S	2.192	–	3.437	.703	#
6930	L	1.812	4.123	4.128	.746	21
6936S	S	1.763	2.412	2.416	.375	45
6949S	S	1.750	2.875	2.880	.500	274
*6952S★	S	*35,00*	*63,45*	*63,55*	*7,92*	#
		1.378	2.498	2.502	.312	
6954S	S	2.062	3.000	3.005	.310	44
*6957	N	2.129	2.762	2.766	.250	48
*6959	S	2.375	4.310	5.880	.331	#
6960	L	1.830	2.570	2.574	.250	4L
*6966S	S	1.437	2.437	2.441	.250	44
*6971S	S	1.915	2.533	2.537	.250	33
*6982S	S	2.625	4.252	4.256	1.156	#
6985	F	1.875	2.628	2.633	.347	29
6988H	H	1.937	2.686	2.690	.500	33

7000 SERIES

Part No.	Lip Mat'l	Shaft Size	Hsg. Bore	Seal O.D.	Seal Width	Type/ Illus.
7006S	S	5.500	6.997	7.004	1.250	43
7013S	S	.750	1.311	1.315	.312	25
7014S	S	.875	1.254	1.260	.205	4S
*7020	S	1.915	2.532	2.548	.250	#
*7021S	S	3.000	4.003	4.008	.375	48
7022S	S	1.687	2.328	2.332	.531	276
7028	S	.750	1.375	1.379	.312	25
*7028V	V	.750	1.375	1.379	.312	25
7038SA⬅	S	1.687	2.502	2.506	.582	41
*7042S%	S	4.500	5.751	5.870	.250	#
7044NA➡	S	1.812	3.000	3.005	.455	86
*7068★%	S	*57,00*	*57,12*	*82,55*	*7,47*	200E
		2.244	2.249	3.250	.294	
7105S	S	1.875	3.375	4.812	.312	#
*7107A	F	1.875	2.720	2.725	.235	29
7131	S	8.000	11.624	11.632	.750	#
*7141	S	2.058	2.676	2.681	.255	200
7154S	S	2.531	4.540	6.125	.500	#
*7183%	S	4.000	4.750	4.750	.500	#
*7184%	S	3.738	3.750	4.500	.500	#
7186S	S	1.812	2.718	2.722	.270	200
*7187S	S	2.430	–	3.031	.380	#
7188S	S	.625	.999	1.003	.250	33
7208S%	S	3.250	4.500	4.600	.315	200E
7214	S	.750	1.031	1.035	.313	49
*7215	L	1.875	2.812	3.000	.500	5L
7216&	L	1.875	3.105	3.110	.500	47
*7230	S	3.750	5.375	5.381	.750	#
*7234	S	4.250	5.250	5.260	.590	#
7235S	S	1.473	1.971	1.979	.562	32
7245	L	1.375	2.502	2.506	.250	4L
7300S⬅	N	1.685	2.500	2.506	1.250	79
7338N&	N	3.000	3.686	3.702	.523	56
7354N%	N	4.375	5.373	5.500	.570	8S
7354V%	V	4.375	5.373	5.500	.570	8S
*7370	S	1.375	2.835	3.020	.390	48
7378	L	5.062	6.994	7.004	1.312	5L
7381S	S	1.687	2.684	2.706	.250	24
*7387	S	11.500	12.495	12.535	.250	#
*7390%	S	4.000	4.104	4.906	.821	#
*7392S	S	1.153	1.686	1.690	.437	#
7399S	S	.625	.937	.945	.187	24
*7412H	H	1.250	1.750	1.754	.250	48
7412S➡	S	1.250	1.750	1.754	.250	48
*7413⬅	N	1.500	2.377	2.381	.470	71
*7456N&	N	1.603	2.282	2.292	.530	94
7457N	N	1.656	2.623	2.627	.455	1S
7486S	S	1.750	2.374	2.381	.437	35
7495S	S	1.375	2.250	2.254	.713	61

For Illustration and Material Data See Technical Section
Designed For A Specific Application - Not Recommended For General Use ➡ Hydrodynamic Lip Design-CW ⬅ Hydrodynamic Lip Design-CCW ++ Not Sold Separately
% External Bore & Flanged O.D.
* The U.S. customer service number is 877-4-TIMKEN. The Canadian customer service numbers are 800-565-4927 (English) and 800-565-0438 (French-Canadian). ★ Metric Seal

7000 SERIES (cont.)

Part No.	Lip Mat'l	Shaft Size	Hsg. Bore	Seal O.D.	Seal Width	Type/ Illus.
*7506N	N	.500	.688	.696	.100	24
*7506S	S	.500	.688	.696	.100	24
*7512S	S	2.500	4.500	6.125	.400	51
7512SSO	S	2.500	4.500	6.125	.400	51
*7516	S	6.375	8.000	8.008	1.060	#
*7525N	N	1.562	2.875	3.062	.468	47
7537S	S	1.500	2.062	2.066	.240	24
*7564	S	10.500	12.500	12.508	1.234	39
7568	H	2.222	3.543	3.548	.760	#
7581H&	H	2.500	3.500	3.505	.500	48
7600S	S	1.825	2.750	2.754	.468	47
7607	F	1.730	2.336	2.340	.280	#
*7679	S	1.875	2.400	2.405	.240	44
7686S	S	1.250	2.250	2.254	.435	25
7687S★	S	*35,00*	*63,50*	*63,83*	*11,05*	#
		1.378	2.500	2.513	.435	
7692S⬅	S	1.500	2.372	2.376	1.458	79
7700S	S	4.625	6.622	6.629	1.093	21
*7708	S	.562	1.234	1.238	.437	71
7715S	S	1.372	2.250	2.515	1.197	#
*7729	S	1.730	2.758	2.762	.882	39
*7731	S	1.750	2.502	2.506	.750	2S
*7738	S	.540	1.219	1.213	.187	#
*7743	S	5.750	6.500	6.510	.500	#
*7747	S	7.125	8.494	8.501	1.062	47
7750	S	.750	1.124	1.128	.188	48
7751H	H	1.968	2.686	2.690	.370	33
*7769	S	1.375	2.437	2.441	.250	48
*7773N	N	2.500	3.500	3.505	.687	#
*7774N	N	3.000	4.003	4.008	.640	#
*7775N	N	3.375	4.626	4.631	.687	#
*7776N	N	3.750	4.751	4.756	.750	#
7780	L	2.667	3.751	3.756	.500	4L
7780N	L	2.667	3.751	3.756	.500	4L
7781S	S	1.250	1.983	1.987	.250	203
*7782N	N	1.875	2.560	2.565	.406	48
7790H	H	2.125	3.193	3.198	.812	#
7834	L	1.750	2.502	2.506	.680	#
7840S	S	.875	1.249	1.254	.187	31
*7843	S	3.000	5.501	5.507	.312	#
*7844	S	3.000	4.125	4.130	.312	#
7866S	S	4.875	6.375	6.625	.500	75
7886S	S	1.500	2.437	2.441	.250	48
7896S	S	3.110	–	5.750	.375	51
7929S	S	.742	1.063	1.067	.187	33
7934S	S	1.875	2.400	2.405	.240	204
7937N	N	2.250	3.061	3.066	.500	41
7941	S	1.125	1.562	1.566	.220	44
*7951	S	2.125	3.125	3.130	.593	41
*7955	S	3.500	4.875	4.881	.925	39
*7972S	S	12.000	14.000	14.010	1.000	45
7994S	S	1.562	2.062	2.066	.200	44

8000 SERIES

Part No.	Lip Mat'l	Shaft Size	Hsg. Bore	Seal O.D.	Seal Width	Type/ Illus.
*8020S	S	2.625	3.749	3.755	.586	41
8059S	S	.968	1.686	1.690	.312	25
*8073	N	1.603	2.375	2.379	.187	#
*8084N	N	1.906	3.189	3.194	.406	45
*8091	S	6.000	8.187	8.194	1.250	#
*8097%	S	1.476	1.493	2.447	.620	39
*8120	S	2.310	2.965	2.970	.250	#
8121S	N	1.730	2.336	2.340	.470	25
*8126N	N	5.000	6.622	6.629	.906	89
8126S	S	5.000	6.622	6.629	.906	89
*8130%	S	3.375	4.275	4.380	.730	#
8133S	S	1.362	2.191	2.195	.250	48
8139	F	2.000	2.961	2.971	.250	#
8160S	S	1.562	2.441	2.457	.500	32

8000 SERIES (cont.)

Part No.	Lip Mat'l	Shaft Size	Hsg. Bore	Seal O.D.	Seal Width	Type/ Illus.
8165	H	1.875	3.000	3.005	.625	#
8181NA➡	S	1.812	2.623	2.627	.455	74
*8228	S	7.927	9.174	9.182	.687	#
*8229	S	3.312	4.249	4.254	.750	#
8243	F	2.125	3.146	3.153	.500	#
*8250	N	1.843	2.672	2.676	.187	#
8293S	S	1.238	2.250	2.254	.500	48
8312&	S	2.136	2.902	2.909	.310	272
8314	S	1.796	2.524	2.800	.599	#
8316★➡	N	*51,00*	*70,00*	*70,28*	*11,00*	32
		2.008	2.756	2.767	.433	
*8338	S	3.750	5.000	5.004	.620	39
*8346	S	1.500	2.385	2.389	.320	#
8362	S	1.875	2.315	2.321	.203	33
*8369S	S	3.125	–	–	.571	#
8370S	S	3.797	4.501	4.506	.250	4S
*8398	S	1.937	3.381	3.376	.667	39
8421S	S	1.562	2.062	2.066	.250	33
*8425	S	3.750	4.624	4.630	.535	#
*8427	S	3.000	4.002	4.625	.884	#
8429S	S	1.247	–	2.633	.480	#
8430S	S	2.125	3.000	3.005	.312	49
8460N&	N	1.739	2.812	3.270	.593	74
*8473S	S	1.830	2.570	2.574	.250	29
*8475	S	4.000	5.250	5.256	.625	39
8477S	S	1.618	2.531	2.535	.750	48
*8480	S	3.557	4.530	4.530	.320	#
*8481%	S	4.062	5.035	5.197	.320	46
*8482	S	4.550	5.500	5.662	.350	#
8515N&	N	1.875	2.812	2.816	.770	74
8516N	N	1.687	2.623	2.627	.437	47
8521S%	S	1.873	2.684	2.684	.544	200E
*8547	V	1.687	2.624	2.628	.609	#
*8547H	H	1.687	2.624	2.628	.609	#
*8548H	H	4.625	6.000	7.125	.987	#
8549S&	S	1.372	–	4.560	.480	#
*8557	S	4.125	5.375	5.585	1.460	39
*8561	S	2.625	3.531	3.536	.812	2S
*8562	S	7.718	9.186	9.191	.875	#
*8571	S	2.250	3.250	3.256	.625	#
8594S	S	1.350	2.571	2.575	.706	62
8597S	S	1.491	2.191	2.195	.250	48
8609	S	.812	1.250	1.254	.254	47
8610➡	S	1.521	2.656	2.660	.424	74
8611N	S	1.521	2.656	2.660	.594	74
8620N	N	1.645	2.656	2.660	.406	47
8622&	S	1.940	2.813	2.817	.428	#
*8632S	S	1.873	2.878	3.250	.875	#
8635S	S	5.500	7.624	7.631	1.250	21
*8636	S	2.437	4.000	4.055	1.093	#
8650S	S	2.125	2.996	3.001	.687	1L
8660L**	L	1.399	2.292	2.296	.500	5L
8660S⬅➡	S	1.399	2.292	2.296	.460	48
*8662	S	5.812	7.125	7.132	.625	35
*8669	S	1.910	2.760	2.760	.070	#
*8673	S	1.437	2.500	2.508	.687	25
8676S	S	1.375	–	4.582	.259	54
8695L**	L	1.550	2.686	2.690	.500	5L
8695S⬅➡	S	1.550	2.686	2.690	.500	47
8704S	S	1.893	2.434	2.438	.250	33
8705S	S	1.734	2.400	2.405	.230	277
*8710	S	3.263	3.275	4.110	.500	#
8724S	S	7.995	11.625	11.633	1.078	41
*8730	S	2.231	3.017	2.974	.070	#
*8733	S	1.460	2.077	2.034	.070	#
*8734	S	1.145	1.765	1.722	.070	#
8750S	S	.762	1.160	1.164	.250	33
*8754S	S	2.258	3.906	3.950	.250	#

For Illustration and Material Data See Technical Section

Designed For A Specific Application - Not Recommended For General Use ➡ Hydrodynamic Lip Design-CW ⬅ Hydrodynamic Lip Design-CCW

⬅➡ Hydrodynamic Lip Design-Bidirectional ** Canada Only % External Bore & Flanged O.D.

* The U.S. customer service number is 877-4-TIMKEN. The Canadian customer service numbers are 800-565-4927 (English) and 800-565-0438 (French-Canadian). ★ Metric Seal

8000 SERIES (cont.)

Part No.	Lip Mat'l	Shaft Size	Hsg. Bore	Seal O.D.	Seal Width	Type/ Illus.
8773S➡	S	.687	1.250	1.254	.250	25
8792S	S	.500	.751	.756	.192	31
*8829	S	2.395	3.941	3.948	.070	#
8835L**	L	1.618	2.575	2.579	.460	33
8835S⬅➡	S	1.618	2.575	2.579	.500	33
*8836H	H	2.000	2.875	2.879	.508	37
8871&	S	2.000	2.562	2.566	.220	286
*8880	S	3.500	4.842	4.848	.875	#
*8883	S	1.365	2.081	2.085	.435	48
*8891	V	.402	.999	1.005	.180	24
*8892	S	3.500	4.500	4.505	.250	#
8907	S	5.937	6.801	–	1.125	#
8935S&	S	1.558	2.250	2.254	1.520	79
8940S	S	1.523	2.714	2.718	.500	48
*8971H	H	5.125	6.125	6.131	.750	7S
8974S	S	2.180	3.000	3.005	.495	49
8975S	S	2.512	3.506	3.510	.290	49
8976S	S	3.125	4.173	4.179	.290	49
*8994N	N	1.625	2.750	2.754	.180	48
*8996S	S	9.250	12.750	12.758	1.125	70
8998%	S	1.996	2.000	2.878	.250	44

9000 SERIES

Part No.	Lip Mat'l	Shaft Size	Hsg. Bore	Seal O.D.	Seal Width	Type/ Illus.
*9014	S	2.500	–	5.371	1.343	#
9015S	S	2.000	2.561	2.565	.549	44
9049	S	1.880	2.562	2.566	.250	25
9049N	S	1.880	2.562	2.566	.250	25
*9063	S	10.630	12.000	12.812	.371	#
*9087	S	1.718	2.228	2.185	.056	#
9128S⬅➡	S	4.166	5.501	5.506	.600	45
9150S	S	1.937	2.578	2.830	.292	25
*9158	N	1.750	3.189	3.193	.400	47
9161	S	1.326	2.312	2.316	.435	48
9178S	S	1.687	2.605	2.609	.235	4S
*9190N&	S	1.812	2.777	2.783	.416	47
*9195S	S	2.172	2.426	3.000	.485	#
*9246N	N	2.336	3.408	3.402	.187	25
*9249	S	1.437	2.188	2.192	.480	47
*9277	S	1.000	1.499	1.503	.390	48
*9303S	S	2.437	3.117	3.145	.540	#
9316	N	1.875	3.160	3.165	.695	72
9339S	S	3.500	4.450	4.455	.525	278
*9342S	S	1.417	2.614	2.629	.500	48
9344S	S	1.375	–	4.582	.259	54
9363S	S	1.500	2.260	2.264	.405	41
9376	S	1.055	1.500	1.504	.268	68
9406S	S	2.000	2.625	2.629	.285	279
*9434%	S	2.121	3.296	3.296	.460	46
9449★⬅	S	*48,01*	*68,58*	*68,68*	*14,78*	74
		1.890	2.700	2.704	.582	
9470&	N	1.500	2.375	2.379	.602	57
*9471★	S	*54,99*	*68,53*	*68,91*	*4,11*	#
		2.165	2.698	2.713	.162	
9487	S	1.187	1.716	1.720	.248	68
*9540➡	S	1.812	2.623	2.627	.455	#
*9541N	N	1.656	2.623	2.627	.455	#
9555S	S	9.500	12.499	12.509	.687	41
9568	S	1.365	2.374	2.379	.435	48
9569S	S	1.365	2.259	2.264	.435	99
*9572%	S	4.759	6.280	6.334	.312	#
*9583⬅➡	S	3.250	4.626	4.633	.706	#
9584&	S	3.562	4.755	4.761	.550	74
*9586	S	4.062	5.372	5.378	.627	#
*9587&	S	4.500	6.250	6.257	.820	#
*9588&	S	4.625	6.250	6.257	.550	#
9599S➡	S	2.125	2.878	2.884	.437	47
9600S	S	3.125	5.985	6.000	.955	#
9613S⬅	S	1.500	2.377	2.381	.470	71

9000 SERIES (cont.)

Part No.	Lip Mat'l	Shaft Size	Hsg. Bore	Seal O.D.	Seal Width	Type/ Illus.
*9640	S	3.250	4.250	4.254	.500	#
*9659	S	.625	.875	.879	.230	#
*9659H	H	.625	.875	.879	.230	#
*9674➡	S	1.250	1.750	1.754	.250	48
*9711	S	2.875	3.751	3.756	.500	41
9773&	N	2.625	4.564	4.568	.718	74
*9791	S	.490	.688	.696	.100	24
*9843	S	9.086	11.004	11.016	.371	#
*9844&	S	1.739	2.812	2.816	.594	#
9845➡	V	1.763	2.409	2.416	.375	47
9845V	V	1.763	2.409	2.416	.375	47
9864S&	S	2.875	3.875	3.880	.515	57
*9907	S	4.500	6.307	6.313	1.141	#
9912¶	S	1.875	2.877	2.865	.470	25
*9927H➡	H	1.875	2.622	2.628	.380	33
*9928H➡	N	1.500	2.247	2.253	.360	75
*9933	H	2.125	2.750	2.754	.500	#
9943%	S	2.562	3.727	3.777	.490	#
*9946N	N	2.500	3.125	3.130	.547	#

10000 SERIES

Part No.	Lip Mat'l	Shaft Size	Hsg. Bore	Seal O.D.	Seal Width	Type/ Illus.
*10543S	S	2.000	2.716	2.720	.593	1S
*10684S	S	1.562	2.441	2.445	.781	1S
*15305S	S	3.500	4.501	4.506	.875	1S
*15379S	S	3.750	4.751	4.756	.875	1S

30000 SERIES

Part No.	Lip Mat'l	Shaft Size	Hsg. Bore	Seal O.D.	Seal Width	Type/ Illus.
30308	L	2.125	3.061	3.066	.687	3L
30365	L	2.125	2.875	2.879	.625	3L
*35012N	N	2.937	4.003	4.008	.625	43
35949N	N	2.937	3.937	3.942	.500	41
37586	T	6.496	7.632	7.638	.497	#
37921⬅	T	4.125	4.999	5.005	1.037	PDW
37939⬅	T	4.000	4.999	5.005	.500	PDW
38832➡	T	.875	1.375	1.379	.312	94

39000 SERIES

Part No.	Lip Mat'l	Shaft Size	Hsg. Bore	Seal O.D.	Seal Width	Type/ Illus.
*39044⬅	T	6.238	8.654	8.661	.560	90
39140⬅	T	1.375	2.125	2.129	.375	94
39302➡	T	2.125	3.189	3.194	.437	W-H
39608⬅	T	3.750	4.750	4.756	.500	DW-H
39701⬅	T	7.250	8.125	8.133	.500	FW-H
39703➡	T	3.625	4.751	4.756	.500	FW-H
39705➡	T	3.750	4.750	4.756	.500	FW-H
39711➡	T	1.562	2.125	2.129	.375	FW-H
39713⬅➡	T	1.250	1.812	1.817	.235	DW-H
39715⬅	T	6.000	7.475	7.481	.590	#
39717➡	T	2.125	3.189	3.194	.437	WW-H
39719⬅	T	2.125	3.189	3.194	.437	WW-H
39723➡	T	4.000	5.000	5.005	.500	FW-H
39732⬅	T	4.750	6.000	6.006	.562	W-H
39801⬅	T	5.000	6.000	6.006	.413	FW-H
39802➡	T	2.875	3.623	3.628	.500	FW-H
39803➡	T	2.500	3.130	3.135	.315	FW-H
39804★➡	T	*75,00*	*93,00*	*93,12*	*8,00*	FW-H
		2.953	3.661	3.666	.315	
39805★⬅	T	*130,00*	*150,00*	*150,44*	*14,80*	FW-H
		5.118	5.906	5.923	.583	
39806★➡	T	*130,00*	*150,00*	*150,44*	*14,50*	FW-H
		5.118	5.906	5.923	.571	
39807⬅	T	6.000	6.750	6.756	.437	W-H
39809➡	T	3.125	4.125	4.130	.437	W-H
39813➡	T	3.625	4.751	4.756	.500	W-H
39815⬅	T	7.250	8.125	8.132	.940	DW-H
39817➡	T	3.125	4.126	4.130	.437	FW-H
39821	T	2.272	2.654	2.661	.250	W
39823➡	T	6.000	6.750	6.757	.625	DW-H
39825⬅	T	4.750	6.000	6.006	.562	FW-H
39827⬅	T	4.750	6.000	6.006	.562	DW-H
39835➡	T	1.812	2.563	2.567	.375	W

For Illustration and Material Data See Technical Section
Designed For A Specific Application - Not Recommended For General Use ➡ Hydrodynamic Lip Design-CW ⬅ Hydrodynamic Lip Design-CCW
⬅➡ Hydrodynamic Lip Design-Bidirectional ** Canada Only % External Bore & Flanged O.D. ¶ Expandable O.D.
* The U.S. customer service number is 877-4-TIMKEN. The Canadian customer service numbers are 800-565-4927 (English) and 800-565-0438 (French-Canadian). ★ Metric Seal

39000 SERIES (cont.)

Part No.	Lip Mat'l	Shaft Size	Hsg. Bore	Seal O.D.	Seal Width	Type/ Illus.
39837⬅	T	3.750	4.750	4.756	.500	W-H
39849➡	T	4.375	5.501	5.506	.500	FW-H
39851⬅	T	2.125	2.875	2.879	.437	FW-H
39853➡	T	2.125	2.875	2.879	.437	FW-H
39861⬅	T	6.496	9.600	9.606	.540	#
39865★➡	T	*90,00*	*157,86*	*158,00*	*14,27*	#
		3.543	6.215	6.220	.562	
39867★⬅	T	*25,00*	*41,00*	*41,09*	*8,00*	W-H
		.984	1.614	1.618	.315	
39869★➡	T	*28,00*	*41,00*	*41,10*	*8,00*	#
		1.102	1.614	1.618	.315	
39875★➡	T	*38,00*	*54,00*	*54,10*	*25,00*	#
		1.496	2.126	2.130	.984	
39877★⬅➡	T	*49,00*	*65,10*	*65,20*	*8,00*	WW
		1.929	2.563	2.567	.315	
39879⬅➡	T	1.299	1.779	1.784	.256	FW-H
39880⬅	T	5.000	5.999	6.006	.413	94
39881⬅	T	4.993	6.000	6.006	.413	FW-H
39882➡	T	3.620	4.625	4.630	.400	FW-H
39883⬅	T	6.238	8.655	8.661	1.100	90
39885⬅	T	6.198	7.328	7.336	.354	FW-H
39886⬅	T	6.202	7.329	7.336	.377	DW-H
39887➡	T	6.204	7.330	7.336	.445	FW-H
39888⬅	T	6.198	7.328	7.336	.445	FW-H
39889⬅	T	6.077	7.328	7.336	.445	W-H
39890➡	T	6.077	7.328	7.336	.445	W-H
39893⬅	T	9.052	10.709	10.720	.625	FW-H
39894➡	T	9.052	10.709	10.720	.625	FW-H
39899⬅	T	11.220	12.250	12.260	.945	#
39900➡	T	11.220	12.250	12.260	.945	#
39904⑤	T	1.312	1.828	1.833	.250	FF
39910⬅➡	T	1.000	1.437	1.441	.250	W
39920➡	T	1.562	2.062	2.067	.188	FW-H
39925➡	T	1.781	2.500	2.505	.312	FW-H
39926★➡	T	*95,00*	*172,00*	*172,09*	*28,00*	W-H
		3.740	6.772	6.775	1.102	
39930➡	T	1.812	2.562	2.567	.315	FW-H
39952⬅	T	4.646	5.751	5.756	.500	FW-H
39954⬅	T	4.835	5.749	5.756	.375	DW-H
39956⬅	T	5.997	7.125	7.131	.500	DW-H
39958⬅	T	5.000	6.125	6.131	.500	FW-H

40000 SERIES

Part No.	Lip Mat'l	Shaft Size	Hsg. Bore	Seal O.D.	Seal Width	Type/ Illus.
*40014S	S	.500	1.250	1.254	.250	4S
*40023S	S	.625	1.375	1.379	.250	4S
40027S	S	.750	1.375	1.379	.250	4S
*40032S	S	.875	1.499	1.503	.250	4S
*40053S	S	1.312	2.374	2.378	.250	4S
40059S	S	1.500	2.374	2.378	.250	4S
*40061S	S	1.375	2.437	2.441	.250	4S
40063S	S	1.500	2.437	2.441	.250	4S
*40066S	S	1.625	2.437	2.441	.250	4S
*40067S	S	1.500	2.502	2.506	.250	4S
40071S	S	1.875	2.623	2.627	.250	4S
40085S	S	2.000	2.996	3.001	.250	4S
40094S	S	1.937	3.189	3.194	.250	4S
*40097S	S	2.125	3.350	3.355	.250	4S
40101S	S	2.375	3.350	3.355	.250	4S
*40120	L	1.000	1.499	1.503	.250	4L
40140S	S	1.250	1.752	1.756	.250	4S
40154S	S	1.687	2.502	2.506	.250	4S
40157S	S	1.000	2.000	2.004	.250	4S
40160S	S	1.125	2.000	2.004	.250	4S
40162S	S	1.187	2.000	2.004	.250	4S
40169S	S	1.375	2.250	2.254	.250	4S
*40183S	S	1.750	2.750	2.754	.250	4S
40185	L	1.562	2.502	2.506	.250	4L
40208	L	.968	1.499	1.503	.250	4L
40230S	S	1.000	1.752	1.756	.250	4S

40000 SERIES (cont.)

Part No.	Lip Mat'l	Shaft Size	Hsg. Bore	Seal O.D.	Seal Width	Type/ Illus.
*40268S	S	1.843	2.623	2.627	.250	4S
40286	L	1.625	2.750	2.754	.250	4L
40301S	S	2.000	3.000	3.005	.250	4S
40316S	S	2.250	3.251	3.256	.250	4S
*40322	S	2.437	3.251	3.256	.250	4S
40337S	S	2.500	3.148	3.154	.250	4S
40360S	S	2.000	2.686	2.690	.250	4S
*40369S	S	1.531	2.623	2.627	.250	4S
40370S	S	1.968	2.960	2.964	.250	4S
40375⬅	T	3.230	3.790	3.795	.325	32
40382	L	1.500	1.983	1.987	.250	4L
*40385S	S	.375	.750	.754	.250	4S
40389S	S	2.000	2.750	2.754	.250	4S
40392★⬅	T	*70,00*	*101,60*	*101,83*	*11,91*	FW-H
		2.756	4.000	4.009	.469	
40395	L	1.375	1.874	1.878	.250	4L
40395S	S	1.375	1.874	1.879	.250	4S
40401	L	2.000	2.501	2.506	.250	4L
40410S	S	2.000	2.623	2.627	.250	4S
40433S	S	2.250	3.125	3.130	.250	4S
40438S	S	1.562	2.374	2.378	.250	4S
40468	L	1.484	2.254	2.258	.250	4L
40494S	S	1.750	2.502	2.506	.250	4S
*40496S	S	2.500	3.350	3.355	.250	4S
*40504S	S	1.375	2.623	2.627	.250	4S
*40519S	S	2.500	3.251	3.256	.250	4S
40520S	S	2.250	3.000	3.005	.250	4S
40522S	S	1.375	2.000	2.004	.250	4S
*40526S	S	1.937	3.155	3.160	.250	4S
40555	L	2.500	3.000	3.005	.250	4L
40555S	S	2.500	3.000	3.005	.250	4S
40566S	S	2.125	2.875	2.879	.250	4S
40568S	S	1.625	2.625	2.629	.250	4S
40576S	S	1.187	1.996	2.000	.250	4S
*40627S	S	2.093	2.835	2.839	.250	4S
40652S	S	1.250	2.000	2.004	.250	4S
*40683S	S	1.250	1.874	1.878	.250	4S
40769S	S	1.312	2.282	2.286	.250	4S
40973S	S	2.093	3.150	3.156	.250	4S
41013S	S	2.093	2.750	2.754	.250	4S
41026S	S	2.375	3.000	3.005	.250	4S
41075S	S	2.250	3.443	3.447	.250	4S
*41081S	S	1.956	2.963	2.968	.250	4S
41163T➡	T	2.625	3.696	3.700	.500	FW-H
*41206S	S	1.750	2.374	2.378	.250	4S
41224S	S	1.000	1.499	1.503	.250	4S
41257	L	1.500	1.989	1.993	.250	4L
41264S	S	.625	1.250	1.254	.250	4S
41267S	S	.875	1.375	1.379	.250	4S
41389S	S	.750	1.250	1.254	.250	4S
*41424S	S	2.000	2.623	2.627	.225	4S
41442S	S	.500	.999	1.003	.250	4S
41461S	S	1.500	2.623	2.627	.250	4S
*41465S	S	1.000	1.689	1.693	.250	4S
41466S	S	.625	1.124	1.128	.250	4S
41509➡	T	6.500	8.000	8.007	.625	PDW
41510⬅	T	6.500	8.000	8.007	.625	PDW
41526S	S	.500	1.124	1.128	.250	4S
41536➡	T	2.875	3.750	3.755	.500	PDW
41537⬅	T	2.875	3.750	3.755	.500	PDW
*41785S	S	1.125	2.062	2.066	.250	4S
41787S	S	1.250	2.062	2.066	.250	4S
42081S	S	1.250	2.250	2.254	.250	4S
42101S	S	2.129	2.891	2.895	.250	4S
*42127S	S	2.187	2.835	2.839	.281	4S
*42135S	S	1.625	2.623	2.627	.250	4S
42260S	S	1.500	1.938	1.942	.250	4S
42280S	S	.875	1.250	1.254	.250	4S

For Illustration and Material Data See Technical Section

Designed For A Specific Application - Not Recommended For General Use ➡ Hydrodynamic Lip Design-CW ⬅ Hydrodynamic Lip Design-CCW

⬅➡ Hydrodynamic Lip Design-Bidirectional ⑤ Seal & Installation Sleeve

* The U.S. customer service number is 877-4-TIMKEN. The Canadian customer service numbers are 800-565-4927 (English) and 800-565-0438 (French-Canadian). ★ Metric Seal

40000 SERIES (cont.)

Part No.	Lip Mat'l	Shaft Size	Hsg. Bore	Seal O.D.	Seal Width	Type/ Illus.
*42289	S	2.250	3.350	3.355	.250	4S
42311S	S	1.000	1.437	1.441	.250	4S
42352S	S	1.750	2.250	2.254	.250	4S
*42364S	S	1.562	2.502	2.506	.250	4S
42421S	S	1.875	2.750	2.754	.250	4S
*42587S	S	2.250	3.500	3.505	.250	4S
*42686	S	2.468	3.236	3.241	.250	4S
*42707S	S	2.375	3.112	3.117	.250	4S
*42754S	S	1.625	2.750	2.754	.250	4S
42763	S	1.375	2.282	2.286	.250	4S
*42999S	S	2.000	2.875	2.879	.250	4S
*43000S	S	2.125	2.875	2.879	.250	4S
43034S	S	2.250	2.875	2.879	.250	4S
*43069S	S	1.170	2.000	2.004	.250	4S
*43070S	S	2.093	3.148	3.153	.250	4S
43071S	S	1.750	2.437	2.441	.250	4S
43072S	S	1.125	1.564	1.568	.250	4S
43073S	S	2.000	2.717	2.721	.250	4S
43074S	S	1.578	2.000	2.004	.250	4S
43076S	S	1.187	2.047	2.051	.250	4S
43077S	S	2.625	3.484	3.489	.250	4S
43078S	S	1.500	2.192	2.196	.250	4S
43080S	S	.500	.875	.879	.218	4S
*43085S	S	2.000	2.996	3.001	.250	4S
43086S	S	2.875	4.003	4.008	.250	4S
*43088S	S	1.437	2.686	2.690	.250	4S
43089S	S	1.375	2.374	2.378	.250	4S
*43092S	S	1.750	2.623	2.627	.250	4S
*43093S	S	1.312	2.000	2.004	.250	4S
43095S	S	.500	.749	.753	.093	4S
43109S	S	2.312	3.065	3.070	.281	4S
43290S	S	2.500	3.125	3.130	.250	4S
*43361★	S	*19,00*	*47,63*	*47,73*	*6,35*	4S
		.748	1.875	1.879	.250	
*43493★	S	*30,00*	*62,00*	*62,15*	*6,35*	4S
		1.181	2.441	2.447	.250	
*43670	S	2.000	3.148	3.153	.250	4S
*43808	S	1.500	2.716	2.720	.250	4S
44052	S	2.255	3.312	3.317	.380	4S
44053	S	1.821	2.623	2.627	.250	4S
45013S	S	3.000	4.003	4.008	.250	4S
45031S	S	3.750	4.999	5.004	.250	4S
45187S	S	4.000	4.876	4.881	.250	4S
45525S	S	3.500	4.125	4.130	.250	4S
45637S	S	4.687	6.002	6.007	.250	4S
45653S	S	1.937	3.500	3.505	.250	4S
45825S	S	3.125	3.751	3.756	.250	4S
45827S	S	2.750	3.501	3.505	.250	4S
46997S	S	2.750	3.751	3.756	.250	4S
*47010S	S	3.625	4.249	4.254	.250	4S
47150S	S	4.250	5.250	5.256	.250	4S
*47314S	S	2.375	3.750	3.755	.250	4S
*47757	S	3.375	4.376	4.381	.250	4S
48144	S	.500	.999	1.003	.250	#
48146	S	.625	1.124	1.128	.250	#

50000 SERIES

Part No.	Lip Mat'l	Shaft Size	Hsg. Bore	Seal O.D.	Seal Width	Type/ Illus.
*50004	L	.468	1.124	1.128	.375	5L
*50009	L	.625	1.124	1.128	.375	5L
*50010	L	.375	1.250	1.254	.375	5L
*50027	V	.750	1.375	1.379	.406	5L
*50041S	S	1.000	1.828	1.832	.437	5S
*50070	S	1.750	2.623	2.627	.500	5S
50081	L	1.718	2.875	2.879	.468	5L
*50097	S	2.125	3.350	3.355	.468	5S
*50099	L	2.250	3.350	3.355	.468	5L
*50099S	S	2.250	3.350	3.355	.468	5S
*50103	S	2.375	3.481	3.486	.500	5S

50000 SERIES (cont.)

Part No.	Lip Mat'l	Shaft Size	Hsg. Bore	Seal O.D.	Seal Width	Type/ Illus.
50126	L	1.406	2.125	2.129	.437	5L
50151S	S	1.125	1.561	1.565	.375	5S
*50160	S	1.125	2.000	2.004	.437	5S
*50183	S	1.750	2.750	2.754	.500	5S
*50197	H	.375	.999	1.003	.375	5S
50197S	S	.375	.999	1.003	.375	5S
*50199H	H	.437	.999	1.003	.375	5S
*50199S	S	.437	.999	1.003	.375	5S
50209	L	1.031	1.499	1.503	.390	5L
50266	L	1.781	2.623	2.627	.500	5L
50289	L	1.750	2.783	2.787	.531	5L
*50317	S	2.312	3.251	3.256	.500	5S
50327	L	1.718	2.437	2.441	.468	5L
*50350	S	2.375	3.371	3.376	.468	5S
*50352	S	1.750	2.502	2.506	.250	5S
*50385	H	.375	.750	.754	.250	5S
50385S	S	.375	.750	.754	.250	5S
*50394	S	1.500	2.125	2.129	.437	5S
50395S	S	1.375	1.874	1.878	.437	5S
*50401	L	2.000	2.502	2.506	.500	5L
50402	L	1.375	2.282	2.286	.500	5L
*50403	S	1.375	2.062	2.066	.437	5S
50445	L	.312	1.250	1.254	.375	5L
50468	L	1.484	2.254	2.258	.312	5L
*50470	H	.437	.875	.879	.312	5S
50470S	S	.437	.875	.879	.312	5S
*50506	L	.718	1.250	1.254	.375	5L
50528	L	1.968	2.996	3.001	.500	5L
50560	L	2.468	3.350	3.355	.468	5L
50568➡	T	1.625	2.625	2.629	.500	5S
50569	T	1.625	2.625	2.629	.500	5S
*50606	L	1.062	1.686	1.690	.375	5L
50631	L	2.218	3.350	3.355	.468	5L
*50737	S	2.250	3.189	3.194	.437	5S
*50776	S	1.375	2.686	2.690	.500	5S
51032S	S	1.281	1.752	1.756	.375	5S
51083	L	1.250	1.752	1.756	.375	5L
51098	S	1.500	2.502	2.506	.437	48
51098L**	L	1.500	2.502	2.506	.435	5L
*51265S	S	2.000	3.150	3.155	.500	5S
51322	S	1.365	2.081	2.085	.435	5S
*53809S	S	.344	.999	1.003	.375	5S
*55014	L	3.000	4.249	4.254	.625	5L
*55014S	S	3.000	4.249	4.254	.625	5S
55028	L	3.562	4.999	5.004	.468	5L
55030	L	3.687	4.999	5.004	.468	5L
*55060	L	4.375	6.250	6.256	.562	5L
*55060S	S	4.375	6.250	6.256	.562	5S
55078S	S	9.750	11.250	11.260	.750	5S
*55095S	S	2.375	3.500	3.505	.500	5S
55103S	S	16.250	18.000	18.010	.750	45
*55173	S	3.500	4.751	4.756	.625	5S
55236	L	3.250	4.718	4.723	.468	5L
55238	L	2.750	4.999	5.004	.468	5L
55301S	**S**	**9.000**	**10.000**	**10.010**	**.750**	**45**
*55331	S	3.375	4.501	4.506	.625	5S
55337	L	2.250	3.876	3.881	.468	5L
55353	L	3.625	4.839	4.844	.500	5L
55357	L	5.437	6.749	6.757	.625	5L
55419	L	3.437	4.501	4.506	.625	5L
*55431	L	3.375	4.718	4.723	.468	5L
55469	S	2.750	3.935	3.940	.500	5L
*55511S	S	2.843	3.939	3.944	.500	5S
*55522	S	4.375	–	3.127	.500	5S
55524	L	2.000	4.003	4.008	.468	5L
55548	L	3.000	4.626	4.631	.500	5L
55563➡	T	3.250	4.003	4.008	.468	5S
*55690	S	3.125	4.625	4.631	.562	5S

For Illustration and Material Data See Technical Section

Designed For A Specific Application - Not Recommended For General Use ➡ Hydrodynamic Lip Design-CW ** Canada Only

* The U.S. customer service number is 877-4-TIMKEN. The Canadian customer service numbers are 800-565-4927 (English) and 800-565-0438 (French-Canadian). ★ Metric Seal

50000 SERIES (cont.)

Part No.	Lip Mat'l	Shaft Size	Hsg. Bore	Seal O.D.	Seal Width	Type/ Illus.
*55829	S	2.375	3.623	3.628	.359	5S
*55857	L	2.375	3.601	3.606	.437	5L
*57831	S	4.062	6.191	6.197	.625	5S

70000 SERIES

Part No.	Lip Mat'l	Shaft Size	Hsg. Bore	Seal O.D.	Seal Width	Type/ Illus.
*70135S	S	1.375	2.125	2.129	.812	7S
*73289S	S	.750	1.375	1.379	.500	7S
*75149S	S	2.625	3.751	3.756	.875	7S
75251S	S	4.812	5.751	5.756	.750	7S
*75464H	H	5.312	6.500	6.507	1.033	7S
*75549H	H	4.000	4.999	5.004	.625	7S
*75658	N	5.187	6.500	6.507	1.093	7S
*75658H	H	5.187	6.500	6.507	1.093	7S
*75963S	S	3.750	4.751	4.757	.875	7S
*76894S	S	3.000	5.000	5.006	.859	7S
*77286H	H	5.500	6.625	6.632	.670	7S
*77322H	H	6.312	7.500	7.507	.690	7S
*77322V	V	6.312	7.500	7.507	.690	7S
*77558H	H	4.625	5.501	5.506	.655	7S
*77685H	H	5.187	6.500	6.507	.812	7S
*77929H	H	4.125	4.999	5.004	.625	7S
*77938	S	3.125	4.003	4.008	.790	7S
*77980	S	4.250	5.250	5.253	.790	7S
*77993T	S	3.720	4.756	4.766	.640	7S
*78021➡	S	4.812	5.751	5.757	.512	7S
*78021T⬅	S	4.812	5.751	5.757	.812	7S
*78048	T	4.173	5.374	5.390	.690	7S

80000 SERIES

Part No.	Lip Mat'l	Shaft Size	Hsg. Bore	Seal O.D.	Seal Width	Type/ Illus.
80313%	S	2.062	3.250	3.310	.500	200E
80330%	L	2.500	3.371	3.435	.500	8L
*84082%	S	3.437	4.625	4.725	.484	8S

100000 SERIES

Part No.	Lip Mat'l	Shaft Size	Hsg. Bore	Seal O.D.	Seal Width	Type/ Illus.
*100052T★⬅	T	*91,01*	*111,00*	*111,13*	*10,01*	FW-H
		3.583	4.370	4.375	.394	
100058➡	T	2.156	2.880	2.885	.375	W
100085★⬅	T	*97,99*	*114,94*	*115,32*	*15,75*	#
		3.858	4.525	4.540	.620	
100086	V	1.880	3.169	3.176	.480	#
100165★	S	*35,00*	*57,00*	*57,30*	*15,27*	#
		1.378	2.244	2.246	.601	
*100202T⬅	T	2.991	3.622	3.637	.385	FW-H
*100203T★⬅	T	*95,00*	*114,99*	*115,32*	*12,50*	FW-H
		3.740	4.527	4.540	.492	
*100204T⬅	T	3.625	4.240	4.256	.390	FW-H
*100205T⬅	T	3.750	4.501	4.506	.362	FW-H
*100239T★⬅	T	*88,00*	*108,00*	*108,36*	*11,10*	FW-H
		3.465	4.252	4.266	.437	
*100253&	T	4.375	5.755	5.705	.840	#
100263➡	V	3.003	4.937	4.948	.788	08
*100266V⬅	V	2.750	3.543	3.549	.500	#
*100355	N	3.250	–	4.325	.404	#
100357	V	1.705	3.034	3.039	.562	86
*100373	N	3.003	3.951	3.961	.289	#
100400V	V	3.350	4.250	4.280	.635	08
*100406	N	3.003	4.028	4.038	.302	#
*100459T	T	.634	1.246	1.255	.300	#
*100467★➡	T	*85,00*	–	*102,57*	*25,40*	#
		3.346	–	4.038	1.000	
100470	T	2.129	2.835	2.846	.323	#
100494➡	V	3.253	4.249	4.260	.635	08
100495	V	3.003	3.751	3.761	.420	08
100557➡	V	3.253	5.500	5.511	.635	08
100675	V	1.875	3.161	3.165	.695	72
100712V	V	1.874	3.159	3.163	.500	#
100715V	V	1.874	3.159	3.163	.500	#
100727	V	2.500	4.035	4.042	.492	#

200000 SERIES

Part No.	Lip Mat'l	Shaft Size	Hsg. Bore	Seal O.D.	Seal Width	Type/ Illus.
200110	S	2.058	3.149	3.154	.270	200
*200118	S	3.478	4.922	4.927	.468	200
*200122	S	2.748	3.937	3.942	.305	200
200133%	S	3.000	4.524	4.600	.433	200E
*200167	S	3.410	5.251	5.257	.500	200
*200169	S	1.812	2.718	2.727	.400	200
*200188	S	3.875	6.000	6.006	.390	200
*200198	S	4.125	6.296	6.302	.390	200
*200204	S	3.500	4.864	4.964	.321	200
*200303	S	1.750	3.149	3.154	.291	200
200322★	S	*75,00*	*120,00*	*120,12*	*8,13*	200
		2.953	4.724	4.729	.320	
*200334	S	1.812	2.874	2.878	.290	200
200335	S	1.750	2.623	2.627	.290	200
200338	S	1.250	2.000	2.004	.290	200
200339	S	2.000	2.875	2.879	.290	200
*200346	S	2.125	3.543	3.548	.320	200
200354	S	1.750	2.718	2.722	.359	200
200371	S	1.945	2.891	2.895	.290	200
200392	S	2.625	3.813	3.818	.415	200
*200396	S	1.937	2.875	2.879	.290	200
*200397	S	2.437	3.149	3.154	.291	200
200600%	S	1.750	2.786	2.876	.285	200E
200603%	S	3.625	4.695	4.810	.395	200E
200640%	S	1.562	2.531	2.621	.285	200E
200641%	S	1.625	2.462	–	.250	200E
200642%	S	4.750	6.002	6.092	.285	200
200752%	S	1.873	2.716	2.806	.281	200E
200763%	S	2.250	3.249	3.250	.285	200E
*200766%	S	3.062	4.230	4.350	.390	200E
*200799%	S	4.000	5.375	5.475	.375	200E
200851%	S	2.496	3.672	3.772	.315	200E
200854%	S	1.750	2.718	2.728	.294	200E
200855%	S	2.375	3.471	3.616	.290	200E
*200856%	S	4.550	5.500	5.570	.350	200
200859%	S	1.500	2.256	–	.270	200
200861%	S	1.500	2.462	2.482	.290	200E
200865%	S	2.065	3.130	3.130	.294	200E
200870%	S	3.249	4.468	4.488	.318	200E
*200875%	S	4.750	6.437	6.457	.359	200E
*200878%	S	3.500	4.921	5.021	.321	200E
*200880%	S	3.249	4.536	4.556	.315	200E
200881%	S	2.000	2.804	2.824	.294	200E
200885%	S	1.991	2.900	2.975	.290	200E
200886%	S	1.687	2.650	2.725	.290	200E
200887%	S	1.562	2.237	2.257	.290	200E
*200888%	S	2.496	3.715	3.745	.315	200E
*200895%	S	1.751	2.533	2.608	.290	200E
*200897%	S	2.058	2.062	3.325	.290	200E
200912%	S	1.750	2.630	2.930	.290	200E
*200919%	S	2.625	3.660	3.960	.320	200E
*200922%	S	3.375	4.500	4.800	.315	200E
200929%	S	2.250	3.400	3.700	.280	200E
*200939%	S	2.390	3.260	3.300	.294	200E
*200940%	S	2.250	3.000	3.060	.290	200E
200942%	S	2.750	3.846	3.928	.290	200E
*200947%	S	4.000	5.510	5.560	.320	200E
*200958%	S	1.875	2.687	2.762	.280	200E
*200961%	S	3.500	4.864	4.964	.321	200E

203000 SERIES

Part No.	Lip Mat'l	Shaft Size	Hsg. Bore	Seal O.D.	Seal Width	Type/ Illus.
203002	S	1.750	2.717	2.721	.406	203
203003	S	1.125	1.937	1.942	.562	203
*203004	S	1.125	1.937	1.942	.625	203
203005	S	1.000	1.780	1.785	.468	203
203006	S	1.812	2.561	2.566	.500	203
*203007	S	1.750	2.440	2.445	.468	203
203008	S	1.687	2.327	2.332	.500	203
203012	S	1.250	1.968	1.972	.468	203

For Illustration and Material Data See Technical Section
Designed For A Specific Application - Not Recommended For General Use ➡ Hydrodynamic Lip Design-CW ⬅ Hydrodynamic Lip Design-CCW % External Bore & Flanged O.D. * The U.S. customer service number is 877-4-TIMKEN. The Canadian customer service numbers are 800-565-4927 (English) and 800-565-0438 (French-Canadian).
★ Metric Seal

Part No.	Lip Mat'l	Shaft Size	Hsg. Bore	Seal O.D.	Seal Width	Type/ Illus.
203000 SERIES (cont.)						
203013	S	1.500	2.327	2.332	.406	203
203015	S	1.750	2.562	2.566	.500	203
203016	S	1.218	1.968	1.972	.468	203
203020	S	1.125	1.780	1.785	.468	203
203025	S	1.218	1.979	1.983	.406	203
203029	S	1.250	1.979	1.983	.406	203
203034	S	1.875	2.995	3.000	.437	203
*203041	S	1.687	2.561	2.566	.500	203
*203045	S	1.250	1.780	1.785	.468	203
*203055	S	1.187	1.968	1.972	.468	203
*203071	S	1.812	2.561	2.566	.437	203
204000 SERIES						
204002	S	1.750	2.716	2.721	.406	204
204005	S	1.000	1.780	1.785	.468	204
*204007	S	1.750	2.440	2.445	.468	204
204008	S	1.687	2.327	2.332	.500	204
*204009	S	2.093	2.716	2.721	.406	204
*204012	S	1.250	1.968	1.972	.468	204
204013	S	1.500	2.327	2.332	.406	204
*204015	S	1.750	2.561	2.566	.500	204
204017	S	1.625	2.327	2.332	.406	204
204020	S	1.125	1.780	1.785	.468	204
*204024	S	1.250	1.979	1.983	.468	204
204027	S	1.375	2.327	2.332	.406	204
204029	S	1.250	1.979	1.983	.406	204
204035	S	2.296	3.148	3.153	.359	204
204038	S	1.750	2.716	2.721	.359	204
*204047	S	1.875	3.149	3.154	.359	204
*204075	S	1.625	2.327	2.332	.440	204
*204078	S	2.093	2.716	2.721	.359	204
*204079	S	1.937	2.562	2.566	.437	204
*204084	S	1.062	2.750	2.754	.437	204
204500	S	1.625	2.562	2.566	.250	4S
204501	S	1.750	3.000	3.005	.250	204
204502	S	1.750	2.561	2.565	.250	204
204503	S	1.750	2.374	2.379	.250	204
204505	S	1.125	1.780	1.785	.250	204
204506	S	2.000	3.623	3.628	.250	204
204507	S	1.250	1.979	1.983	.250	204
204508	S	2.000	3.062	3.066	.250	204
204509	S	5.000	6.250	6.256	.250	204
205000 SERIES						
205004	F	1.125	1.937	1.942	.625	205
205005	F	1.000	1.780	1.785	.468	205
*205006	F	1.812	2.561	2.566	.500	205
*205009★	F	*53,00*	*69,00*	*69,11*	*10,30*	205
		2.087	2.717	2.721	.406	
*205011	F	1.062	1.938	1.942	.625	205
205015	F	1.750	2.562	2.566	.500	205
205017	F	1.625	2.328	2.332	.406	205
*205020	F	1.125	1.781	1.785	.468	205
*205027	F	1.375	2.328	2.332	.406	205
205035	F	2.296	3.148	3.153	.359	205
205044	F	2.000	2.964	2.968	.500	205
*205051	F	1.718	2.562	2.566	.500	205
*205058	F	2.000	2.562	2.566	.500	205
210000 SERIES						
210295	S	1.937	2.875	2.879	.687	21
*210914	S	1.500	3.125	3.130	.625	21
210945	S	1.750	3.371	3.376	.625	21
*215271	S	5.000	5.999	6.007	.937	21
*216239	S	7.000	8.500	8.507	1.031	21
220000 SERIES						
220818★	S	*8,00*	*18,00*	*18,20*	*7,00*	32
		.315	.709	.717	.276	
220000 SERIES (cont.)						
220860★	S	*8,00*	*16,00*	*16,20*	*7,00*	35
		.315	.630	.638	.276	
220918★	S	*9,00*	*18,00*	*18,20*	*7,00*	35
		.354	.709	.717	.276	
221040★	S	*10,00*	*19,00*	*19,20*	*7,00*	35
		.394	.748	.756	.276	
221122★	S	*11,00*	*22,00*	*22,23*	*7,00*	35
		.433	.866	.875	.276	
221207★	S	*12,00*	*22,00*	*22,25*	*7,00*	35
		.472	.866	.876	.276	
221208★	V	*12,00*	*22,00*	*22,25*	*7,00*	35
		.472	.866	.876	.276	
221410★	S	*14,00*	*24,00*	*24,23*	*7,00*	35
		.551	.945	.954	.276	
221510★	N	*15,00*	*25,00*	*25,25*	*6,00*	32
		.591	.984	.994	.236	
221540★	S	*15,00*	*30,00*	*30,23*	*7,00*	35
		.591	1.181	1.190	.276	
221607★	N	*16,00*	*27,00*	*27,20*	*14,00*	#
		.630	1.063	1.071	.551	
221610★	N	*16,00*	*28,00*	*28,23*	*7,00*	32
		.630	1.102	1.111	.276	
221620★	S	*16,00*	*30,00*	*30,23*	*7,00*	35
		.630	1.181	1.190	.276	
221710★	S	*17,00*	*28,00*	*28,23*	*7,00*	35
		.669	1.102	1.111	.276	
221720★	S	*17,00*	*30,00*	*30,23*	*8,00*	32
		.669	1.181	1.190	.276	
221730★	S	*17,00*	*32,00*	*32,22*	*7,00*	35
		.669	1.260	1.269	.276	
221735★	S	*17,00*	*35,00*	*35,18*	*7,00*	35
		.669	1.378	1.385	.276	
221820★➡	S	*18,00*	*30,00*	*30,23*	*9,00*	32
		.709	1.181	1.190	.354	
221830★	S	*18,00*	*32,00*	*32,22*	*8,00*	35
		.709	1.260	1.269	.315	
221920★	S	*19,00*	*30,00*	*30,20*	*7,00*	32
		.748	1.181	1.189	.276	
221922★	S	*19,00*	*32,00*	*32,20*	*8,00*	32
		.748	1.260	1.268	.315	
221925★	S	*19,00*	*36,00*	*36,23*	*6,50*	35
		.748	1.417	1.426	.256	
222020★	S	*20,00*	*32,00*	*32,23*	*7,00*	35
		.787	1.260	1.269	.276	
222025★	S	*20,00*	*30,00*	*30,28*	*7,00*	32
		.787	1.181	1.192	.276	
222028★⬅	S	*20,00*	*34,00*	*34,25*	*7,00*	32
		.787	1.339	1.348	.276	
222030★➡	S	*20,00*	*35,00*	*35,23*	*5,50*	32
		.787	1.378	1.387	.217	
222036★	V	*20,00*	*36,00*	*36,20*	*7,00*	32
		.787	1.417	1.425	.276	
222050★	S	*20,00*	*40,00*	*40,23*	*7,00*	35
		.787	1.575	1.584	.276	
222060★	S	*20,00*	*47,00*	*47,20*	*7,00*	35
		.787	1.850	1.858	.276	
222210★	S	*22,00*	*32,00*	*32,23*	*7,00*	35
		.866	1.260	1.269	.276	
222220★	S	*22,00*	*35,00*	*35,23*	*7,00*	32
		.866	1.378	1.387	.276	
222238★	S	*22,00*	*38,00*	*38,20*	*8,00*	32
		.866	1.496	1.504	.315	
222240★	S	*22,00*	*40,00*	*40,23*	*7,00*	35
		.866	1.575	1.584	.276	
222242★	N	*22,00*	*40,00*	*40,23*	*12,00*	32
		.866	1.575	1.584	.472	
222267★⬅	H	*22,00*	*45,00*	*45,20*	*8,00*	32
		.866	1.772	1.780	.315	
222270★	S	*22,00*	*47,00*	*47,23*	*7,00*	35
		.866	1.850	1.859	.276	

For Illustration and Material Data See Technical Section

Designed For A Specific Application - Not Recommended For General Use ➡ Hydrodynamic Lip Design-CW ⬅ Hydrodynamic Lip Design-CCW

* The U.S. customer service number is 877-4-TIMKEN. The Canadian customer service numbers are 800-565-4927 (English) and 800-565-0438 (French-Canadian). ★ Metric Seal

220000 SERIES (cont.)

Part No.	Lip Mat'l	Shaft Size	Hsg. Bore	Seal O.D.	Seal Width	Type/ Illus.
222310★	S	*23,00*	*32,00*	*32,20*	*5,00*	34
		.905	1.260	1.268	.197	
222330★⬅	N	*23,00*	*34,00*	*34,23*	*8,00*	32
		.905	1.339	1.348	.315	
222340★➡	N	*23,00*	*40,00*	*40,23*	*7,00*	32
		.905	1.575	1.584	.276	
222410★	S	*24,00*	*35,00*	*35,23*	*7,00*	35
		.945	1.378	1.387	.276	
222430★	S	*24,00*	*40,00*	*40,23*	*7,00*	35
		.945	1.575	1.584	.276	
222450★	S	*24,00*	*43,00*	*43,23*	*8,00*	25
		.945	1.693	1.702	.315	
222510★	S	*25,00*	*35,00*	*35,25*	*7,00*	35
		.984	1.378	1.388	.276	
222535★	S	*25,00*	*38,00*	*38,23*	*7,00*	32
		.984	1.496	1.505	.276	
222540★	S	*25,00*	*40,00*	*40,22*	*7,00*	47
		.984	1.575	1.583	.276	
222556★➡	H	*25,00*	*42,00*	*42,30*	*8,00*	32
		.984	1.654	1.665	.315	
222558★	S	*25,00*	*44,00*	*44,20*	*7,00*	32
		.984	1.732	1.740	.276	
222580★	S	*25,00*	*62,00*	*62,28*	*10,00*	32
		.984	2.441	2.452	.394	
222630★	N	*26,00*	*38,00*	*38,20*	*8,00*	32
		1.024	1.496	1.504	.315	
222655★	S	*26,00*	*48,00*	*48,23*	*7,00*	32
		1.024	1.890	1.899	.276	
222742★	V	*27,00*	*42,00*	*42,10*	*7,00*	48
		1.063	1.654	1.657	.276	
222743★⬅	H	*27,00*	*43,00*	*43,20*	*9,00*	32
		1.063	1.693	1.701	.354	
222745★➡	N	*27,00*	*45,00*	*45,25*	*9,00*	32
		1.063	1.772	1.781	.354	
222820★	S	*28,00*	*40,00*	*40,34*	*7,00*	33
		1.102	1.575	1.588	.276	
222830★⬅	N	*28,00*	*41,00*	*41,27*	*7,00*	32
		1.102	1.614	1.625	.276	
222835★	N	*28,00*	*44,00*	*44,20*	*6,00*	32
		1.102	1.732	1.740	.236	
222860★➡	N	*28,00*	*47,00*	*47,22*	*8,00*	32
		1.102	1.850	1.859	.315	
223005★	S	*30,00*	*40,00*	*40,23*	*7,00*	48
		1.181	1.575	1.584	.276	
223010★➡	S	*30,00*	*42,00*	*42,20*	*7,00*	32
		1.181	1.654	1.661	.276	
223012★➡	N	*30,00*	*44,00*	*44,20*	*7,00*	32
		1.181	1.732	1.740	.276	
223014★	S	*30,00*	*45,00*	*45,20*	*6,00*	32
		1.181	1.772	1.780	.236	
223018★	S	*30,00*	*46,00*	*46,23*	*7,00*	32
		1.181	1.811	1.820	.276	
223020★	S	*30,00*	*47,00*	*47,25*	*8,00*	35
		1.181	1.850	1.860	.315	
223035★	S	*30,00*	*52,00*	*52,18*	*7,00*	35
		1.181	2.047	2.054	.276	
223050★➡	S	*30,00*	*50,00*	*50,23*	*7,00*	32
		1.181	1.969	1.978	.276	
223210★	S	*32,00*	*40,00*	*40,15*	*5,00*	34
		1.260	1.575	1.581	.197	
223215★⬅	S	*32,00*	*42,00*	*42,20*	*10,00*	32
		1.260	1.654	1.661	.394	
223220★➡	N	*32,00*	*44,00*	*44,23*	*6,00*	32
		1.260	1.732	1.741	.236	
223230★	S	*32,00*	*45,00*	*45,23*	*7,00*	32
		1.260	1.772	1.781	.276	
223235★	N	*32,00*	*46,00*	*46,23*	*6,00*	32
		1.260	1.811	1.820	.236	
223240★	N	*31,50*	*48,00*	*48,20*	*9,00*	40
		1.260	1.890	1.898	.354	

220000 SERIES (cont.)

Part No.	Lip Mat'l	Shaft Size	Hsg. Bore	Seal O.D.	Seal Width	Type/ Illus.
223250★➡	S	*32,00*	*50,00*	*50,23*	*8,00*	32
		1.260	1.969	1.978	.315	
223252★⬅	N	*32,00*	*52,00*	*52,28*	*11,00*	32
		1.260	2.047	2.058	.433	
223253★➡	N	*32,00*	*53,00*	*53,28*	*7,00*	32
		1.260	2.087	2.098	.276	
223255★	S	*32,00*	*52,00*	*52,28*	*7,00*	35
		1.260	2.047	2.058	.276	
223340★➡	S	*33,00*	*47,00*	*47,20*	*8,00*	32
		1.299	1.850	1.858	.315	
223400★	N	*34,00*	*44,00*	*44,23*	*8,00*	32
		1.339	1.732	1.741	.315	
223410★	S	*34,00*	*48,00*	*48,28*	*7,50*	35
		1.339	1.890	1.901	.295	
223420★➡	N	*34,00*	*48,00*	*48,28*	*8,00*	32
		1.339	1.890	1.901	.315	
223430★➡	N	*34,00*	*50,00*	*50,20*	*8,00*	35
		1.339	1.969	1.976	.315	
223440★	N	*34,00*	*53,00*	*53,28*	*8,00*	32
		1.339	2.087	2.098	.315	
223462★	S	*34,00*	*62,00*	*62,20*	*10,00*	35
		1.339	2.441	2.449	.394	
223510★	S	*35,00*	*47,00*	*47,23*	*7,00*	35
		1.378	1.850	1.859	.276	
223520★	S	*35,00*	*50,00*	*50,24*	*8,00*	35
		1.378	1.969	1.978	.315	
223535★	S	*35,00*	*52,00*	*52,13*	*8,00*	33
		1.378	2.047	2.052	.315	
223540★⬅➡	N	*35,00*	*55,00*	*55,45*	*8,00*	40
		1.378	2.165	2.183	.315	
223542★	N	*35,00*	*55,00*	*55,23*	*11,00*	32
		1.378	2.165	2.174	.433	
223543★	S	*35,00*	*56,00*	*56,27*	*10,00*	32
		1.378	2.205	2.215	.394	
223550★	S	*35,00*	*58,00*	*58,10*	*10,00*	45
		1.378	2.283	2.287	.394	
223551★	S	*35,00*	*60,00*	*60,23*	*10,00*	35
		1.378	2.362	2.371	.394	
223552★	S	*35,00*	*62,00*	*62,28*	*9,50*	32
		1.378	2.441	2.452	.374	
223553★➡	N	*35,00*	*62,00*	*62,28*	*9,00*	40
		1.378	2.441	2.452	.354	
223554★	S	*35,00*	*63,00*	*63,28*	*10,00*	#
		1.378	2.480	2.491	.394	
223555★	N	*35,00*	*64,00*	*64,13*	*8,00*	47
		1.378	2.520	2.525	.315	
223580★➡	S	*35,00*	*68,00*	*68,16*	*9,00*	40
		1.378	2.677	2.683	.354	
223601★	S	*36,00*	*47,00*	*47,20*	*7,00*	35
		1.417	1.850	1.858	.276	
223602★➡	N	*36,00*	*49,00*	*49,28*	*7,00*	32
		1.417	1.929	1.940	.276	
223605★	S	*36,00*	*50,00*	*50,08*	*7,00*	47
		1.417	1.969	1.972	.276	
223608★⬅	S	*36,00*	*52,00*	*52,20*	*10,00*	32
		1.417	2.047	2.055	.394	
223610★	S	*36,00*	*54,00*	*54,28*	*7,50*	35
		1.417	2.126	2.137	.295	
223620★➡	S	*36,00*	*68,00*	*68,18*	*8,00*	48
		1.417	2.677	2.684	.315	
223750★➡	N	*37,00*	*50,00*	*50,25*	*6,00*	32
		1.457	1.969	1.978	.236	
223800★➡	N	*38,00*	*50,00*	*50,28*	*10,50*	32
		1.496	1.969	1.980	.413	
223801★	S	*38,00*	*50,00*	*50,28*	*8,00*	32
		1.496	1.969	1.980	.315	
223802★➡	N	*38,00*	*50,00*	*50,25*	*6,00*	32
		1.496	1.969	1.978	.236	
223805★	S	*38,00*	*47,00*	*47,10*	*7,00*	25
		1.496	1.850	1.854	.276	

For Illustration and Material Data See Technical Section
Designed For A Specific Application - Not Recommended For General Use ➡ Hydrodynamic Lip Design-CW ⬅ Hydrodynamic Lip Design-CCW
⬅➡ Hydrodynamic Lip Design-Bidirectional ★ Metric Seal

220000 SERIES (cont.)

Part No.	Lip Mat'l	Shaft Size	Hsg. Bore	Seal O.D.	Seal Width	Type/ Illus.
223822	S	1.496	2.087	.000	.315	32
223830★	N	*38,00*	*55,00*	*55,28*	*7,00*	35
		1.496	2.165	2.176	.276	
223831★➡	N	*38,00*	*55,00*	*55,30*	*9,00*	32
		1.496	2.165	2.177	.354	
223840★	S	*38,00*	*58,00*	*58,11*	*8,00*	47
		1.496	2.283	2.288	.315	
223842★	V	*38,00*	*58,00*	*58,11*	*8,00*	48
		1.496	2.283	2.288	.315	
223843★	S	*38,00*	*60,00*	*60,35*	*10,00*	35
		1.496	2.362	2.376	.394	
224010★	S	*40,00*	*52,00*	*52,28*	*7,00*	35
		1.575	2.047	2.058	.276	
224015★	S	*40,00*	*52,00*	*52,28*	*7,00*	32
		1.575	2.047	2.058	.276	
224020★➡	S	*40,00*	*55,00*	*55,28*	*9,00*	32
		1.575	2.165	2.176	.315	
224025★➡	N	*40,00*	*56,00*	*56,25*	*7,00*	32
		1.575	2.205	2.215	.276	
224026★	V	*40,00*	*56,00*	*56,26*	*9,00*	35
		1.575	2.205	2.215	.354	
224040★	S	*40,00*	*60,00*	*60,20*	*10,00*	35
		1.575	2.362	2.370	.394	
224045★	S	*40,00*	*62,00*	*62,27*	*11,00*	32
		1.575	2.441	2.452	.433	
224052★➡	H	*40,00*	*52,00*	*52,28*	*7,00*	32
		1.575	2.047	2.058	.276	
224053	V	1.575	2.047	.000	.276	32
224063★➡	N	*40,00*	*63,00*	*63,30*	*8,00*	32
		1.575	2.480	2.492	.315	
224066★➡	N	*40,00*	*66,00*	*66,30*	*8,00*	40
		1.575	2.598	2.610	.315	
224068★	N	*40,00*	*68,00*	*68,10*	*9,00*	40
		1.575	2.677	2.681	.354	
224100★	S	*40,00*	*65,00*	*65,28*	*10,00*	35
		1.575	2.559	2.570	.394	
224150★	N	*41,00*	*54,00*	*54,23*	*7,00*	35
		1.614	2.126	2.135	.276	
224200★	S	*42,00*	*55,00*	*55,20*	*7,50*	32
		1.654	2.165	2.173	.295	
224205★➡	N	*42,00*	*55,00*	*55,33*	*9,00*	32
		1.654	2.165	2.178	.354	
224210★	S	*42,00*	*55,00*	*55,28*	*8,00*	35
		1.654	2.165	2.176	.315	
224215★⬅	N	*42,00*	*58,00*	*58,28*	*8,00*	32
		1.654	2.283	2.294	.315	
224220★	S	*42,00*	*56,00*	*56,21*	*7,00*	49
		1.654	2.205	2.213	.276	
224235★	S	*42,00*	*58,00*	*58,18*	*7,00*	48
		1.654	2.283	2.291	.276	
224250★	S	*42,00*	*62,00*	*62,27*	*8,00*	35
		1.654	2.441	2.452	.315	
224252★	S	*42,00*	*62,00*	*62,27*	*10,00*	32
		1.654	2.441	2.452	.394	
224254★	S	*42,00*	*64,00*	*64,18*	*6,00*	34
		1.654	2.520	2.527	.236	
224255★	N	*42,00*	*65,00*	*65,15*	*10,00*	47
		1.654	2.559	2.565	.394	
224266★	S	*42,00*	*66,00*	*66,28*	*10,00*	32
		1.654	2.598	2.609	.394	
224270★	S	*42,00*	*72,00*	*72,27*	*10,00*	32
		1.654	2.835	2.845	.394	
224320★	S	*43,00*	*62,00*	*62,10*	*9,50*	47
		1.693	2.441	2.445	.374	
224400★	S	*43,00*	*54,00*	*54,10*	*6,50*	25
		1.693	2.126	2.130	.256	
224450★➡	N	*44,00*	*59,00*	*59,23*	*6,80*	35
		1.732	2.323	2.332	.268	
224460★➡	H	*44,00*	*60,00*	*60,28*	*10,00*	32
		1.732	2.362	2.373	.394	

220000 SERIES (cont.)

Part No.	Lip Mat'l	Shaft Size	Hsg. Bore	Seal O.D.	Seal Width	Type/ Illus.
224462★⬅➡	S	*44,00*	*62,00*	*62,26*	*8,00*	32
		1.732	2.441	2.451	.315	
224464★⬅	N	*44,00*	*62,00*	*62,28*	*10,00*	32
		1.732	2.441	2.452	.394	
224465★➡	S	*44,00*	*65,00*	*65,20*	*11,00*	32
		1.732	2.559	2.567	.433	
224470★	S	*44,00*	*72,00*	*72,11*	*10,00*	35
		1.732	2.835	2.839	.394	
224510★	S	*45,00*	*58,00*	*58,30*	*7,00*	32
		1.772	2.283	2.295	.276	
224520★	S	*45,00*	*60,00*	*60,25*	*10,00*	35
		1.772	2.362	2.372	.394	
224550★	S	*45,00*	*65,00*	*65,28*	*8,00*	35
		1.772	2.559	2.570	.315	
224560★	S	*45,00*	*68,00*	*68,28*	*7,00*	32
		1.772	2.677	2.688	.276	
224570★	S	*45,00*	*72,00*	*72,28*	*12,00*	35
		1.772	2.835	2.846	.472	
224650★➡	N	*46,00*	*58,00*	*58,28*	*7,00*	32
		1.811	2.283	2.294	.276	
224660★➡	H	*46,00*	*60,00*	*60,28*	*7,00*	32
		1.811	2.362	2.373	.276	
224662★	S	*46,00*	*62,00*	*62,10*	*8,00*	35
		1.811	2.441	2.445	.315	
224663★➡	N	*46,00*	*63,00*	*63,40*	*7,70*	35
		1.811	2.480	2.496	.303	
224772★	S	*47,00*	*72,00*	*72,23*	*8,00*	48
		1.850	2.835	2.844	.315	
224810★	N	*48,00*	*62,00*	*62,28*	*8,00*	32
		1.890	2.441	2.452	.315	
224815★	N	*48,00*	*74,00*	*74,30*	*10,00*	40
		1.890	2.913	2.925	.394	
224820★	S	*48,00*	*62,00*	*62,10*	*8,00*	32
		1.890	2.441	2.445	.315	
224835★	N	*48,00*	*68,00*	*68,27*	*10,00*	32
		1.890	2.677	2.688	.394	
224840★➡	S	*48,00*	*68,00*	*68,30*	*11,00*	32
		1.890	2.677	2.689	.433	
224850★	S	*48,00*	*72,00*	*72,28*	*10,00*	32
		1.890	2.835	2.846	.394	
224865★	S	*48,00*	*65,00*	*65,20*	*10,00*	32
		1.890	2.559	2.567	.394	
224870★	S	*48,00*	*73,00*	*73,10*	*7,00*	47
		1.890	2.874	2.878	.276	
224872★	S	*48,00*	*72,00*	*72,35*	*8,50*	32
		1.890	2.835	2.848	.335	
224874★	S	*48,00*	*74,00*	*74,23*	*10,00*	32
		1.890	2.913	2.922	.394	
224979★➡	N	*49,00*	*79,00*	*79,10*	*17,50*	47
		1.929	3.110	3.114	.689	
225005★	S	*50,00*	*62,00*	*62,28*	*7,00*	32
		1.969	2.441	2.452	.276	
225008★	S	*50,00*	*62,00*	*62,10*	*9,00*	47
		1.969	2.441	2.445	.354	
225010★	S	*50,00*	*65,00*	*65,28*	*8,00*	47
		1.969	2.559	2.565	.315	
225020★➡	V	*50,00*	*68,00*	*68,28*	*9,00*	32
		1.969	2.677	2.688	.354	
225030★	S	*50,00*	*72,00*	*72,28*	*8,00*	35
		1.969	2.835	2.846	.315	
225035★	S	*50,00*	*72,00*	*72,35*	*10,00*	32
		1.969	2.835	2.848	.394	
225040★➡	S	*50,00*	*72,00*	*72,35*	*12,00*	32
		1.969	2.835	2.848	.472	
225050★	S	*50,00*	*80,00*	*80,28*	*8,00*	35
		1.969	3.150	3.161	.315	
225082★	S	*50,00*	*82,00*	*82,18*	*11,50*	#
		1.969	3.228	3.235	.453	
225110★	S	*51,00*	*65,00*	*65,10*	*7,00*	47
		2.008	2.559	2.563	.276	

For Illustration and Material Data See Technical Section
Designed For A Specific Application - Not Recommended For General Use ➡ Hydrodynamic Lip Design-CW ⬅ Hydrodynamic Lip Design-CCW
⬅➡ Hydrodynamic Lip Design-Bidirectional ★ Metric Seal

Part No.	Lip Mat'l	Shaft Size	Hsg. Bore	Seal O.D.	Seal Width	Type/ Illus.
220000 SERIES (cont.)						
229520★	S	*95,00*	*130,00*	*130,28*	*12,00*	35
		3.740	5.118	5.129	.472	
229522	S	1.969	2.618	.000	.610	40
230000 SERIES						
231002★	S	*100,00*	*120,00*	*120,28*	*12,00*	35
		3.937	4.724	4.735	.472	
231003★	S	*100,00*	*125,00*	*125,28*	*12,00*	35
		3.937	4.921	4.932	.472	
231004★	H	*100,00*	*120,00*	*120,12*	*11,00*	32
		3.937	4.724	4.735	.433	
231052★	H	*105,00*	*120,00*	*120,20*	*11,00*	32
		4.134	4.724	4.732	.433	
231204★	S	*120,00*	*145,00*	*145,28*	*12,00*	35
		4.724	5.709	5.720	.472	
231250★	S	*125,00*	*150,00*	*150,28*	*12,00*	35
		4.921	5.906	5.917	.472	
231402★	S	*140,00*	*160,00*	*160,27*	*13,00*	35
		5.512	6.299	6.310	.512	
231405★	S	*140,00*	*170,00*	*170,28*	*15,00*	35
		5.512	6.693	6.704	.591	
*231905★	S	*190,00*	*220,00*	*220,35*	*16,00*	35
		7.480	8.661	8.675	.630	
239128★	S	*38,00*	*52,00*	*52,20*	*9,00*	#
		1.496	2.047	2.055	.354	
239129★	S	*73,00*	*86,00*	*86,28*	*5,00*	#
		2.874	3.386	3.397	.197	
239134★	S	*37,00*	*78,00*	*78,30*	*12,00*	#
		1.457	3.071	3.083	.472	
239146★	S	*38,00*	*54,00*	*54,30*	*7,00*	48
		1.496	2.126	2.138	.276	
239155	S	1.772	2.520	2.530	.472	#
239201★&	S	*40,00*	*52,00*	*52,20*	*6,50*	32
		1.575	2.047	2.055	.256	
240000 SERIES						
*240005	S	.500	1.124	1.134	.175	24
*240007	S	.562	1.124	1.135	.175	24
240009	S	.625	1.124	1.135	.175	24
240023	S	.625	1.375	1.385	.175	24
240119	S	.500	.999	1.010	.175	24
240151	S	1.125	1.561	1.572	.187	24
240215	S	.875	1.624	1.634	.187	24
240319	S	1.500	2.000	2.010	.187	24
*240319N	N	1.500	2.000	2.010	.187	24
240356	S	1.250	1.686	1.697	.187	24
240385	S	.375	.750	.760	.175	24
*240385N	N	.375	.750	.760	.175	24
240414	S	1.000	1.437	1.447	.187	24
240435	S	.250	.750	.760	.175	24
240457	S	.984	1.828	1.838	.187	24
240462	S	1.000	1.936	1.948	.187	24
*240462N	N	1.000	1.936	1.948	.187	24
240470	S	.437	.875	.885	.175	24
240698	S	.312	.625	.635	.175	24
240716	S	1.312	1.752	1.760	.187	24
240731	S	1.000	1.250	1.260	.125	24
240733	S	.875	1.124	1.135	.125	24
240735	S	.750	.999	1.010	.156	24
240736	S	1.250	1.499	1.509	.156	24
*240791	S	.625	1.124	1.135	.175	24
*240791N	N	.625	1.124	1.135	.175	24
240816	S	.750	1.062	1.072	.187	24
240949	S	1.250	1.250	1.838	.187	24
250000 SERIES						
*250416	S	.625	1.000	1.004	.250	25
250437V	V	1.156	1.575	1.580	.312	25
*250861V	V	.875	1.260	1.265	.250	25
251511	**S**	**1.250**	**1.625**	**1.630**	**.188**	**25**

Part No.	Lip Mat'l	Shaft Size	Hsg. Bore	Seal O.D.	Seal Width	Type/ Illus.
250000 SERIES (cont.)						
252277	**S**	**1.000**	**1.375**	**1.379**	**.250**	**25**
*252277V	V	1.000	1.375	1.379	.250	25
*252317	S	.812	1.367	1.372	.312	25
*252450	S	.750	1.311	1.315	.312	25
253099	**S**	**1.500**	**1.874**	**1.879**	**.250**	**25**
*253610	S	2.375	2.873	2.877	.312	25
253747	**S**	**.625**	**.875**	**.880**	**.125**	**25**
*253752★	S	*57,00*	*67,00*	*67,11*	*6,00*	25
		2.244	2.638	2.642	.236	
254270	**S**	**.750**	**1.124**	**1.129**	**.187**	**25**
254287	**S**	**.875**	**1.250**	**1.255**	**.250**	**25**
*254287V	V	.875	1.250	1.255	.250	25
*255566H	H	3.250	4.125	4.130	.500	25
*255833	S	3.625	4.725	4.730	.312	25
*256616	S	8.625	9.778	9.786	.625	25
*256656	S	8.125	8.750	8.757	.375	25
*256936N	N	2.750	3.500	3.505	.567	25
290000 SERIES						
*290070	F	1.750	2.623	2.627	.500	29
*290944	F	1.875	2.998	3.002	.375	29
*291070	F	2.062	2.875	2.879	.500	29
291099	F	1.625	2.562	2.566	.375	29
*291148	F	2.000	3.264	3.269	.312	29
*291190	S	1.000	2.106	2.110	.468	29
291295	F	1.843	2.400	2.404	.235	29
*292100	F	2.250	3.264	3.269	.312	29
292594	F	2.000	2.635	2.639	.235	29
*293280	F	2.000	3.155	3.160	.500	29
*293751★	S	*38,00*	*52,91*	*53,01*	*8,26*	29
		1.496	2.083	2.087	.325	
*295113	F	2.875	4.335	4.340	.437	29
*295200	F	4.500	5.501	5.506	.562	29
*296051	F	3.250	4.500	4.505	.406	29
*296121	F	2.875	4.500	4.505	.406	29
296470	F	3.250	4.249	4.254	.375	29
310000 SERIES						
*310385	S	.375	.750	.754	.250	31
310841	S	2.750	3.125	3.130	.187	31
311189	S	.375	.687	.691	.156	31
*311189N	N	.375	.687	.691	.156	31
*311197	S	.621	.937	.941	.187	31
312140	S	1.125	1.502	1.506	.250	31
312196	S	.500	.843	.848	.250	31
*312260	S	1.500	1.938	1.942	.250	31
312518	S	.750	1.000	1.005	.125	31
*313043	S	.750	1.187	1.191	.156	31
313156	N	.562	.810	.814	.187	31
*313156N	N	.562	.810	.814	.187	31
*313290	S	2.500	3.125	3.130	.250	31
313842	S	1.125	1.438	1.444	.215	31
314259	S	.562	.875	.879	.187	31
314267N	N	.625	1.000	1.005	.125	31
*315286★	S	*125,00*	*140,00*	*140,18*	*7,00*	31
		4.921	5.512	5.519	.276	
*315364	S	2.750	3.500	3.505	.250	31
*315364H	H	2.750	3.500	3.505	.250	31
320000 SERIES						
*320242	V	.697	1.220	1.227	.204	32
320249★➡	V	*35,00*	*48,00*	*48,21*	*7,60*	32
		1.378	1.890	1.898	.299	
320259➡	V	2.005	2.878	2.888	.340	32
320348★➡	V	*32,00*	*45,00*	*45,21*	*6,00*	32
		1.260	1.772	1.780	.236	
320457	S	.472	1.000	1.006	.375	32
*320510V	V	1.937	2.500	2.510	.374	32
*320552V	V	2.375	3.125	3.138	.500	32

For Illustration and Material Data See Technical Section

Designed For A Specific Application - Not Recommended For General Use ➡ Hydrodynamic Lip Design-CW & Flanged O.D.

* The U.S. customer service number is 877-4-TIMKEN. The Canadian customer service numbers are 800-565-4927 (English) and 800-565-0438 (French-Canadian). ★ Metric Seal

320000 SERIES (cont.)

Part No.	Lip Mat'l	Shaft Size	Hsg. Bore	Seal O.D.	Seal Width	Type/ Illus.
*320563★	V	*42,00*	*60,00*	*60,22*	*7,00*	32
		1.654	2.362	2.371	.276	
320564★	V	*45,00*	*68,00*	*68,28*	*7,00*	32
		1.772	2.677	2.688	.276	
*320567	S	.875	1.375	1.383	.312	32
320583★➡	S	*43,00*	*60,00*	*60,30*	*8,00*	32
		1.693	2.362	2.374	.315	
320595★	S	*29,00*	*45,00*	*45,23*	*8,00*	32
		1.142	1.772	1.781	.315	
320603★➡	S	*25,00*	*37,00*	*37,26*	*7,00*	32
		.984	1.457	1.467	.276	
320691★⬅	V	*82,00*	*99,50*	*99,77*	*12,70*	32
		3.228	3.918	3.928	.500	
*320832★	S	*48,00*	*62,00*	*62,20*	*8,00*	32
		1.890	2.441	2.449	.315	
*320833★	S	*38,00*	*52,00*	*52,25*	*8,50*	32
		1.496	2.047	2.057	.335	
*320834★	S	*38,00*	*74,00*	*74,27*	*11,00*	32
		1.496	2.913	2.924	.433	
*320857★	S	*35,00*	*56,00*	*56,27*	*10,00*	32
		1.378	2.205	2.215	.394	
*321150	S	1.625	2.374	2.385	.375	32
321267	S	.875	1.375	1.381	.250	32
321416	N	1.500	2.055	2.065	.276	32
321417N	N	1.417	1.953	1.961	.276	32
321460	S	1.781	2.251	2.259	.375	32
*321471	S	.984	1.834	1.842	.250	32
321516	S	1.000	2.441	2.447	.375	32
322353	S	1.250	1.687	1.693	.250	32
322373	S	1.500	2.250	2.260	.312	32
323119	S	1.750	2.715	2.721	.437	32
323125	S	1.375	2.717	2.723	.375	32
323126	S	1.250	1.685	1.691	.252	32
323133	S	1.125	1.781	1.787	.406	32
323138	**S**	**1.375**	**1.828**	**1.834**	**.250**	**32**
*323715★	S	*42,00*	*60,00*	*60,22*	*7,00*	32
		1.654	2.362	2.371	.276	
*323871★	S	*45,00*	*61,90*	*62,00*	*10,00*	32
		1.772	2.437	2.441	.394	
324112	S	.500	1.156	1.166	.250	32
*324115N★	N	*32,00*	*46,00*	*46,20*	*6,00*	32
		1.260	1.811	1.819	.236	
*324151★	S	*25,00*	*40,00*	*40,31*	*8,00*	32
		.984	1.575	1.587	.315	
*324151N★	N	*25,00*	*40,00*	*40,31*	*8,00*	32
		.984	1.575	1.587	.315	
*324152	N	1.375	2.166	2.176	.485	32
*324186★	S	*52,00*	*68,00*	*68,43*	*10,00*	32
		2.047	2.677	2.694	.394	
324204★➡	V	*39,00*	*57,00*	*57,38*	*9,65*	32
		1.535	2.244	2.259	.380	
324234V	V	.500	1.010	1.017	.204	32
324939	S	1.625	2.116	2.127	.312	32
324941	S	1.750	2.566	2.574	.311	32
*325088	S	3.000	4.490	4.508	.562	32
*325277T➡	T	4.687	6.500	6.514	.500	32
*325277TL⬅	T	4.687	6.500	6.514	.500	32
*325378⬅➡	V	4.687	5.750	5.762	.565	32
325776	V	4.330	5.118	5.130	.396	32
*325940	S	12.750	13.625	13.635	.562	32
*325978	S	2.812	3.500	3.510	.430	32
327215	S	4.000	4.998	5.006	.500	32
327303	**S**	**4.500**	**5.251**	**5.259**	**.437**	**32**
*327934⬅➡	T	4.812	5.750	5.762	.580	32
*327958⬅➡	V	5.187	6.500	6.512	.500	32
*327984⬅	T	5.312	6.500	6.513	.500	32
*327985T⬅	T	5.312	6.500	6.513	.500	32
327995★⬅	V	*76,00*	*92,00*	*92,28*	*9,60*	32
		2.992	3.622	3.633	.378	

320000 SERIES (cont.)

Part No.	Lip Mat'l	Shaft Size	Hsg. Bore	Seal O.D.	Seal Width	Type/ Illus.
*327995V	V	2.991	3.622	3.637	.380	32

330000 SERIES

Part No.	Lip Mat'l	Shaft Size	Hsg. Bore	Seal O.D.	Seal Width	Type/ Illus.
*330356	S	1.250	1.686	1.691	.375	33
330385	**S**	**.375**	**.750**	**.754**	**.250**	**33**
330414	S	1.000	1.437	1.441	.250	33
*330414N	N	1.000	1.437	1.441	.250	33
*330480	S	1.375	1.828	1.832	.375	33
*330480N	N	1.375	1.828	1.832	.375	33
330663	S	1.375	1.874	1.878	.312	33
*330663N	N	1.375	1.874	1.878	.312	33
330699	**S**	**.500**	**.875**	**.879**	**.187**	**33**
*330749	S	1.562	2.062	2.066	.250	33
*330749N	N	1.562	2.062	2.066	.250	33
330749V	V	1.562	2.062	2.066	.250	33
*330867H	H	2.125	2.875	2.879	.375	33
*331107	S	2.000	2.746	2.750	.375	33
*331107H	H	2.000	2.746	2.750	.375	33
331107N	**H**	**2.000**	**2.746**	**2.750**	**.375**	**33**
331173	S	.701	1.160	1.164	.250	33
331227H➡	H	1.875	2.624	2.628	.375	33
331228H➡	N	1.500	2.249	2.253	.360	75
331301N	N	2.000	2.562	2.566	.528	33
*331356★	S	*50,00*	*62,00*	*62,08*	*6,00*	33
		1.969	2.441	2.444	.236	
*331882	S	1.937	2.686	2.690	.500	33
332062➡	S	1.869	2.518	2.522	.375	33
332134	S	2.062	2.561	2.565	.312	33
*332271N	N	2.330	3.000	3.005	.400	33
*333860★	S	*28,00*	*46,89*	*47,00*	*8,00*	33
		1.102	1.846	1.850	.315	
334111★	S	*43,00*	*54,00*	*54,10*	*7,50*	33
		1.693	2.126	2.130	.295	
*335821	S	4.500	5.250	5.256	.437	33
*335821H	H	4.500	5.250	5.256	.437	33
*335924	S	4.000	4.562	4.568	.375	33
*335924H	H	4.000	4.562	4.568	.375	33
335924N	N	4.000	4.562	4.568	.375	33
*336665H	H	6.125	6.750	6.757	.375	33
337426N	N	9.250	10.250	10.258	.500	33

340000 SERIES

Part No.	Lip Mat'l	Shaft Size	Hsg. Bore	Seal O.D.	Seal Width	Type/ Illus.
340009S	S	.625	1.124	1.130	.250	34
340120	S	1.000	1.499	1.507	.250	34
340136	S	1.500	2.250	2.258	.250	34
*340136H	H	1.500	2.250	2.258	.250	34
340151	S	1.125	1.561	1.569	.250	34
340210	S	1.062	1.499	1.507	.250	34
340356	S	1.250	1.686	1.696	.218	34
340385	S	.375	.750	.756	.250	34
340387	S	.625	.812	.820	.093	34
340400	S	1.750	2.250	2.258	.250	34
*340400H	H	1.750	2.250	2.258	.250	34
340413	S	.875	1.308	1.316	.250	34
340469	S	.656	1.250	1.258	.250	34
*340469N	N	.656	1.250	1.258	.250	34
340483	S	.875	1.250	1.256	.250	34
340495	S	.750	1.124	1.133	.250	34
340724	S	.614	.999	1.006	.250	34
340771	S	.490	.875	.883	.250	34
340787	S	.937	1.375	1.383	.250	34
*340787N	N	.937	1.375	1.383	.250	34
340797	S	.593	.935	.943	.175	34
340815	S	1.125	1.494	1.505	.250	34
340817	S	1.187	1.627	1.635	.250	34
340823	S	1.875	2.502	2.511	.250	34
340826	S	.312	.500	.506	.125	34
340827	S	.375	.562	.568	.125	34
340835	S	1.125	1.375	1.381	.125	34

For Illustration and Material Data See Technical Section

➡ Hydrodynamic Lip Design-CW ⬅ Hydrodynamic Lip Design-CCW ⬅➡ Hydrodynamic Lip Design-Bidirectional

* The U.S. customer service number is 877-4-TIMKEN. The Canadian customer service numbers are 800-565-4927 (English) and 800-565-0438 (French-Canadian). ★ Metric Seal

340000 SERIES (cont.)

Part No.	Lip Mat'l	Shaft Size	Hsg. Bore	Seal O.D.	Seal Width	Type/ Illus.
340847	S	.500	.750	.756	.125	34
340849	S	.625	.875	.883	.093	34
340850	S	.875	1.187	1.193	.187	34
340853	S	1.375	1.750	1.756	.187	34
340872	S	.156	.500	.504	.187	34
340900	S	2.093	2.716	2.725	.250	34
340927	S	1.562	2.096	2.102	.250	34
340930	S	1.437	2.000	2.006	.125	34
*340980	S	1.500	2.062	2.066	.240	34
341022	S	2.250	2.625	2.636	.187	34
*341119★	S	*58,00*	*80,98*	*81,18*	*6,35*	34
		2.283	3.188	3.196	.250	
*341518	S	1.362	2.241	2.249	.250	34
*342047	S	.390	.750	.756	.250	34
*342214	S	1.312	1.750	1.758	.250	34
342517	S	1.000	1.312	1.318	.125	34
342518	S	.750	1.000	1.005	.125	34
342613	S	.500	.875	.881	.125	34
342614	S	.500	.875	.881	.250	34
342805	S	.500	.687	.693	.093	34
343098	S	1.000	1.247	1.253	.187	34
343099	S	1.500	1.874	1.880	.250	34
343101	S	.437	.624	.633	.125	34
343104	S	.250	.499	.505	.187	34
343105	S	.625	.936	.942	.187	34
343123	S	1.000	1.563	1.569	.187	34
343185	S	.750	1.125	1.131	.156	34
343186	S	1.250	1.499	1.505	.125	34
345035	S	4.000	4.999	5.008	.312	34
345146	S	3.500	4.499	4.508	.250	34
*345214	S	4.812	6.000	6.010	.250	34
*345214H	H	4.812	6.000	6.010	.250	34
345448	S	5.250	6.250	6.260	.250	34
*345703	S	3.250	4.330	4.340	.250	34
*345887	S	2.500	3.750	3.759	.250	34

350000 SERIES

Part No.	Lip Mat'l	Shaft Size	Hsg. Bore	Seal O.D.	Seal Width	Type/ Illus.
350156	S	.375	.874	.883	.312	35
*350319	S	1.500	2.000	2.010	.437	35
350364	**S**	**.312**	**.750**	**.756**	**.250**	**35**
*350385	S	.375	.750	.756	.250	35
350394	S	1.500	2.125	2.134	.437	35
350414	S	1.000	1.437	1.445	.250	35
350435	**S**	**.250**	**.750**	**.758**	**.250**	**35**
*350509★	S	*15,00*	*25,00*	*25,22*	*7,00*	35
		.591	.984	.993	.276	
350567	S	.875	1.375	1.385	.312	35
350572★	V	*40,00*	*72,00*	*72,35*	*7,00*	35
		1.575	2.835	2.848	.276	
350609★⬅	N	*44,00*	*68,00*	*68,30*	*8,00*	35
		1.732	2.677	2.689	.315	
*350612★	V	*40,00*	*56,00*	*56,26*	*7,00*	35
		1.575	2.205	2.215	.276	
350679	S	.750	1.250	1.258	.312	35
350823	S	1.875	2.502	2.506	.328	35
*350858★	S	*52,00*	*72,00*	*72,28*	*8,00*	35
		2.047	2.835	2.846	.315	
350877	S	.875	1.575	1.581	.250	35
*350878	S	1.281	1.997	2.005	.375	35
350909	S	1.000	1.502	1.510	.312	35
350936	**S**	**1.875**	**2.561**	**2.571**	**.312**	**35**
*350936N	N	1.875	2.561	2.571	.312	35
350954	S	.750	1.250	1.256	.250	35
350974	**S**	**1.125**	**1.850**	**1.859**	**.312**	**35**
351028	S	.490	1.122	1.132	.265	35
351255	S	.625	1.375	1.381	.250	35
351267	S	.875	1.375	1.381	.250	35
351466	S	.625	1.124	1.130	.250	35
351487	S	.625	.999	1.005	.250	35

350000 SERIES (cont.)

Part No.	Lip Mat'l	Shaft Size	Hsg. Bore	Seal O.D.	Seal Width	Type/ Illus.
*351518	S	1.362	2.241	2.249	.250	35
351646	S	.875	1.624	1.630	.250	35
352354	S	1.375	1.874	1.880	.250	32
352444	S	1.437	2.062	2.068	.250	35
352521	S	1.500	2.000	2.006	.250	32
352541	**S**	**2.000**	**2.502**	**2.508**	**.250**	**35**
352560	S	1.125	1.561	1.567	.250	35
352637	S	2.250	3.035	3.044	.375	35
353120	**S**	**1.875**	**2.397**	**2.403**	**.250**	**35**
353131	S	.812	1.375	1.381	.250	35
353132	S	.875	1.308	1.314	.250	35
353135	S	1.250	1.686	1.692	.219	35
353137	S	1.281	2.000	2.006	.250	35
353141	S	1.687	2.279	2.285	.250	35
*353676★	S	*50,00*	*68,00*	*68,28*	*8,00*	35
		1.969	2.677	2.688	.315	
354040	T	1.750	2.500	2.508	.375	35
354041	T	1.771	2.622	2.628	.500	35
354967	S	2.950	3.741	3.752	.394	35
355200	S	4.500	5.501	5.511	.500	35
*355305	S	3.500	4.501	4.511	.528	35
*355305N	N	3.500	4.501	4.511	.528	35
355526	S	3.000	3.876	3.885	.500	35
*355590V★⬅➡	V	*116,50*	*135,00*	*135,30*	*13,00*	35
		4.587	5.315	5.327	.512	
355660H	H	3.622	4.331	4.342	.394	35
355669	S	3.040	3.937	3.946	.250	35
355732	S	2.500	4.250	4.260	.500	35
*355737	S	2.125	3.547	3.557	.375	35
*357971V	V	5.748	6.751	6.763	.500	35

360000 SERIES

Part No.	Lip Mat'l	Shaft Size	Hsg. Bore	Seal O.D.	Seal Width	Type/ Illus.
365008%	S	2.687	3.876	3.876	.250	36

370000 SERIES

Part No.	Lip Mat'l	Shaft Size	Hsg. Bore	Seal O.D.	Seal Width	Type/ Illus.
370001A	S	3.500	4.842	4.848	.925	09
370002A	S	3.500	5.000	5.006	1.000	03
370003A	S	4.765	6.311	6.318	1.078	11
370004A	S	4.812	6.500	6.507	.865	03
370005A	S	4.765	6.251	6.265	.605	09
370006A	S	4.765	6.999	7.006	1.250	03
370007A	S	4.875	6.373	6.379	.921	03
370008A	S	3.937	5.372	5.378	1.015	11
370009A	S	3.937	5.501	5.507	.937	03
370010A	S	2.875	4.125	4.130	.842	01
370011A	S	3.625	5.000	5.014	.875	05
370012A	S	3.625	4.810	4.823	.921	07
370013A	S	3.312	5.000	5.006	.937	03
370014A	S	3.125	4.500	4.506	.605	06
370015A	S	4.000	5.375	5.381	1.000	03
370018A	S	3.250	4.500	4.506	.605	06
370019A	S	4.375	6.251	6.256	.605	06
370020A	S	4.500	6.000	6.007	.984	03
370021A	S	4.500	6.251	6.265	.610	09
370022A	S	4.500	5.750	5.756	.960	09
370023A	S	3.875	5.690	5.706	.875	11
370024A	S	3.875	5.501	5.515	.875	11
370025A	S	4.625	5.999	6.008	.840	11
370026A	S	4.635	6.007	6.014	.937	03
370027A	S	4.812	6.311	6.316	1.062	03
370028A	S	5.000	6.250	6.256	1.375	01
370029A	S	3.187	5.000	5.006	.765	03
370030A	S	4.265	6.064	6.071	.605	06
370031A	S	4.250	6.250	6.256	1.188	09
370033A	S	3.875	5.126	5.132	.605	06
370034A	S	4.375	6.311	6.317	1.090	03
370036A	S	4.000	5.757	5.772	.930	09
370037A	S	4.375	5.757	5.763	1.000	03
370038A	S	5.000	7.437	7.444	.605	06

For Illustration and Material Data See Technical Section

⬅ Hydrodynamic Lip Design-CCW ⬅➡ Hydrodynamic Lip Design-Bidirectional % External Bore

* The U.S. customer service number is 877-4-TIMKEN. The Canadian customer service numbers are 800-565-4927 (English) and 800-565-0438 (French-Canadian). ★ Metric Seal

370000 SERIES (cont.)

Part No.	Lip Mat'l	Shaft Size	Hsg. Bore	Seal O.D.	Seal Width	Type/ Illus.
370039A	S	5.500	7.437	7.444	1.000	03
370043A	S	5.500	7.125	7.132	1.187	03
370046A	S	3.125	4.625	4.631	.605	06
370047A	S	3.437	4.755	4.761	.605	06
370048A	S	4.375	5.905	5.911	1.000	03
370051A	S	4.625	6.622	6.629	1.093	03
370054A	S	2.875	4.175	4.181	.822	03
370057A	S	4.875	6.437	6.444	.921	03
370063A	S	5.000	6.250	6.256	.605	06
370064A	S	5.625	7.186	7.194	.906	03
370065A	S	4.250	6.008	6.022	1.000	09
370066A	S	4.000	5.626	5.632	.605	06
370069A	S	5.250	7.375	7.386	1.000	03
*370077A	S	6.000	7.875	7.881	.605	06
370078A	S	4.500	6.622	6.629	1.093	03
*370082A	S	7.375	9.054	9.063	1.062	03
370086A	S	4.500	6.310	6.316	1.175	03
*370087A	S	4.000	5.248	5.254	.605	06
370094A	S	4.125	5.375	5.381	.605	06
370106A	S	4.166	5.500	5.506	.605	06
370107A	S	4.250	6.035	6.047	.915	03
370109A	S	4.875	6.622	6.629	1.000	03
370119A	S	5.640	7.501	7.507	.605	06
370120A	S	5.500	7.250	7.256	1.187	03
370121A	S	4.875	6.500	6.506	1.000	03
370124A	S	4.500	5.374	5.391	.984	07
*370127A	S	2.752	3.937	3.942	.565	#
370131A	S	4.500	5.876	5.892	.984	11
370132A	S	3.500	4.543	4.558	.788	07
370145A	S	3.125	4.174	4.188	.500	07
*370149A	S	6.625	8.007	8.014	.605	06
370150A	S	2.875	3.875	3.889	.500	07
*370151A	S	7.875	10.234	10.242	.605	06
*370154A	S	5.000	7.000	7.006	1.000	03
*370155A	S	2.740	3.937	3.942	.565	06
370165A	S	3.875	5.376	5.381	.985	03
370166A	S	5.000	6.622	6.629	1.093	03
370169A	S	3.500	4.751	4.757	.605	07
370173A	S	4.765	6.250	6.257	1.050	01
370175A	S	7.250	8.750	8.758	.605	06
370178A	S	4.500	5.500	5.515	.675	07
370179A	S	3.500	4.450	4.456	.843	07
370181A	S	4.765	5.999	6.006	1.031	01
370182A	S	4.375	5.905	5.910	1.000	08
370191A	S	3.312	4.501	4.506	.605	06
370192A	S	4.500	6.441	6.447	.937	03
370195A	S	4.875	6.001	6.015	.625	07
370198A	S	4.040	5.122	5.130	.945	09
370199A	V	2.359	3.938	3.952	.575	09
370211A	S	2.948	4.725	4.738	.526	07
370212A	V	3.539	5.277	5.291	.604	07
370215A	V	5.000	7.000	7.015	1.130	#
370216A	S	4.625	5.999	6.006	.890	11
370219A	S	2.250	3.372	3.377	.475	12
370220A★	S	*119,99*	*150,01*	*150,16*	*14,99*	11
		4.724	5.906	5.912	.590	
*370223A	S	2.938	3.750	3.765	.530	#
*370224A	S	4.768	6.999	7.039	.735	02
370338A=	S	4.375	5.757	5.798	.600	02
370349A=	S	4.000	5.757	5.798	.600	02
370352A	S	2.750	3.779	3.792	.767	08
376590A=	S	4.250	6.048	6.048	.680	04

380000 SERIES

Part No.	Lip Mat'l	Shaft Size	Hsg. Bore	Seal O.D.	Seal Width	Type/ Illus.
380001A	T	3.500	4.842	4.847	.910	10
380003A	T	4.765	6.311	6.318	1.132	10
380009A	T	3.937	5.501	5.507	.937	03
380022A	T	4.500	5.750	5.756	.960	10

380000 SERIES (cont.)

Part No.	Lip Mat'l	Shaft Size	Hsg. Bore	Seal O.D.	Seal Width	Type/ Illus.
380023A	T	3.875	5.690	5.706	.770	10
380025A	T	4.625	5.999	6.005	.937	10
380031A	T	4.250	6.250	6.256	1.188	10
380036A	T	4.000	5.757	5.772	.930	10
380048A	T	4.375	5.905	5.918	1.015	10
380065A	T	4.250	6.000	6.008	1.000	10
380069A	T	5.250	7.375	7.386	1.000	3
380131A	T	4.500	5.876	5.892	.984	10
386025A	T	4.625	.000	5.998	.580	10
386590A	T	4.252	6.007	6.048	.580	10

390000 SERIES

Part No.	Lip Mat'l	Shaft Size	Hsg. Bore	Seal O.D.	Seal Width	Type/ Illus.
*392076	S	2.231	3.371	3.376	.812	#
*392077	S	1.996	2.996	3.001	.812	#
*395068	S	4.875	6.250	6.256	.812	#
*396412	S	8.345	10.750	10.758	1.125	#
*396440	S	8.000	10.000	10.008	1.145	#
*396487	S	2.930	4.375	4.380	1.120	#

410000 SERIES

Part No.	Lip Mat'l	Shaft Size	Hsg. Bore	Seal O.D.	Seal Width	Type/ Illus.
*410005	S	.500	1.124	1.128	.375	41
*410007	S	.562	1.124	1.128	.375	41
*410009	S	.625	1.124	1.128	.375	41
*410009N	N	.625	1.124	1.128	.375	41
*410014	S	.500	1.250	1.254	.375	41
*410016	S	.562	1.250	1.254	.375	41
*410018	S	.625	1.250	1.254	.375	41
*410019	S	.500	1.375	1.379	.406	41
*410021	S	.562	1.375	1.379	.406	41
*410023	S	.625	1.375	1.379	.406	41
*410025	S	.687	1.375	1.379	.406	41
*410027	S	.750	1.375	1.379	.406	41
*410028	S	.750	1.499	1.503	.390	41
*410032	S	.875	1.499	1.503	.390	41
*410033	S	.750	1.828	1.832	.437	41
*410037	S	.875	1.828	1.832	.437	41
*410040	S	.968	1.828	1.832	.437	41
*410041	S	1.000	1.828	1.832	.437	41
*410045	S	1.125	1.828	1.832	.437	41
*410047	S	1.187	1.983	1.987	.437	41
*410049	S	1.250	1.983	1.987	.437	41
*410052	S	1.187	2.062	2.066	.437	41
*410053	S	1.312	2.374	2.378	.500	41
*410055	S	1.375	2.374	2.378	.500	41
*410057	S	1.437	2.374	2.378	.500	41
410059	S	1.500	2.374	2.378	.500	41
*410059H	H	1.500	2.374	2.378	.500	41
*410059N	N	1.500	2.374	2.378	.500	41
*410060	S	1.531	2.374	2.378	.500	41
*410060V	V	1.531	2.374	2.378	.500	41
*410061	S	1.375	2.437	2.441	.468	41
*410062	S	1.437	2.437	2.441	.468	41
*410063	S	1.500	2.437	2.441	.468	41
*410064	S	1.562	2.437	2.441	.468	41
*410064H	H	1.562	2.437	2.441	.468	41
*410066	S	1.625	2.437	2.441	.468	41
*410067	S	1.500	2.502	2.506	.500	41
*410067H	H	1.500	2.502	2.506	.500	41
*410069	S	1.625	2.623	2.627	.500	41
*410070	S	1.750	2.623	2.627	.500	41
*410070N	N	1.750	2.623	2.627	.500	41
*410071	S	1.875	2.623	2.627	.500	41
*410071N	N	1.875	2.623	2.627	.500	41
*410074	S	1.687	2.686	2.690	.500	41
*410076	S	1.750	2.686	2.690	.500	41
*410077	S	1.500	2.758	2.762	.500	41
*410080	S	1.687	2.875	2.879	.468	41
*410082	S	1.875	2.875	2.879	.468	41
*410082H	H	1.875	2.875	2.879	.468	41

For Illustration and Material Data See Technical Section
Designed For A Specific Application - Not Recommended For General Use = w/Metal ID
* The U.S. customer service number is 877-4-TIMKEN. The Canadian customer service numbers are 800-565-4927 (English) and 800-565-0438 (French-Canadian). ★ Metric Seal

410000 SERIES (cont.)

Part No.	Lip Mat'l	Shaft Size	Hsg. Bore	Seal O.D.	Seal Width	Type/ Illus.
*410083	S	2.000	2.875	2.879	.468	41
*410083N	N	2.000	2.875	2.879	.468	41
*410084	S	1.875	2.996	3.001	.500	41
410085	S	2.000	2.996	3.001	.500	41
*410085H	H	2.000	2.996	3.001	.500	41
410085N	N	2.000	2.996	3.001	.500	41
*410085V	V	2.000	2.996	3.001	.500	41
*410086	S	1.687	3.062	3.066	.500	41
*410087	S	1.750	3.061	3.066	.500	41
*410088	S	1.750	3.189	3.194	.437	41
*410088N	N	1.750	3.189	3.194	.437	41
*410090	S	1.812	3.189	3.194	.437	41
*410092	S	1.875	3.189	3.194	.437	41
*410094	S	1.937	3.189	3.194	.437	41
*410095	S	2.000	3.189	3.194	.437	41
*410097	S	2.125	3.350	3.355	.468	41
*410097N	N	2.125	3.350	3.355	.468	41
*410097V ⬅	V	2.125	3.350	3.355	.468	41
*410098	S	2.187	3.350	3.355	.468	41
*410099	S	2.250	3.350	3.355	.468	41
*410099N	N	2.250	3.350	3.355	.468	41
*410100N	N	2.312	3.350	3.355	.468	41
*410101	S	2.375	3.350	3.355	.468	41
410101N	N	2.375	3.350	3.355	.468	41
*410101S	S	2.375	3.350	3.355	.468	41
*410101V	V	2.375	3.350	3.355	.468	41
410102	**S**	**2.000**	**3.371**	**3.376**	**.468**	**41**
*410102N	N	2.000	3.371	3.376	.468	41
*410103	S	2.375	3.481	3.486	.500	41
*410109	S	1.562	2.750	2.754	.500	41
*410115	S	2.125	2.996	3.001	.500	41
*410115N	N	2.125	2.996	3.001	.500	41
*410117	S	1.875	2.750	2.754	.500	41
*410117H	H	1.875	2.750	2.754	.500	41
*410117N	N	1.875	2.750	2.754	.500	41
410119	S	.500	.999	1.003	.375	41
*410120	S	1.000	1.499	1.503	.390	41
*410120N	N	1.000	1.499	1.503	.390	41
*410121	S	2.125	3.189	3.194	.437	41
*410121V	V	2.125	3.189	3.194	.437	41
*410122	S	1.437	2.623	2.627	.500	41
*410122H	H	1.437	2.623	2.627	.500	41
*410129	S	1.312	2.062	2.066	.437	41
*410132	S	2.250	3.371	3.376	.468	41
*410135	S	1.375	2.125	2.129	.437	41
*410135N	N	1.375	2.125	2.129	.437	41
*410136	S	1.500	2.250	2.254	.500	41
*410137	S	.687	1.124	1.128	.375	41
*410138	S	1.937	2.686	2.690	.500	41
*410139	S	2.187	2.996	3.001	.500	41
*410141	S	.750	1.250	1.254	.375	41
*410143	S	1.562	2.561	2.565	.500	41
*410144	S	1.437	2.502	2.506	.500	41
*410152	S	1.187	2.125	2.129	.437	41
*410152N	N	1.187	2.125	2.129	.437	41
*410153	S	1.375	2.106	2.110	.468	41
*410154	S	1.687	2.502	2.506	.500	41
*410154N	N	1.687	2.502	2.506	.500	41
*410155	S	1.750	2.758	2.762	.500	41
*410157	S	1.000	2.000	2.004	.437	41
*410160	S	1.125	2.000	2.004	.437	41
*410162	S	1.187	2.000	2.004	.437	41
*410162N	N	1.187	2.000	2.004	.437	41
410163	S	1.250	2.000	2.004	.437	41
*410163N	N	1.250	2.000	2.004	.437	41
*410165	S	1.250	2.250	2.254	.500	41
*410167	S	1.312	2.250	2.254	.500	41
*410169	S	1.375	2.250	2.254	.500	41

410000 SERIES (cont.)

Part No.	Lip Mat'l	Shaft Size	Hsg. Bore	Seal O.D.	Seal Width	Type/ Illus.
*410169N	N	1.375	2.250	2.254	.500	41
*410171	S	1.437	2.250	2.254	.500	41
*410177	S	1.250	2.106	2.110	.468	41
*410179	S	1.312	2.106	2.110	.468	41
*410182	S	1.125	1.983	1.987	.437	41
*410183	S	1.750	2.750	2.754	.500	41
410183N	N	1.750	2.750	2.754	.500	41
*410185	S	1.562	2.502	2.506	.500	41
*410186	S	1.687	2.750	2.754	.500	41
*410187	S	1.000	2.062	2.066	.437	41
*410189	S	1.125	1.752	1.756	.437	41
410190	**S**	**1.500**	**2.561**	**2.565**	**.500**	**41**
*410194	S	1.625	2.502	2.506	.500	41
410194V	V	1.625	2.502	2.506	.500	41
*410202	S	.562	.999	1.003	.375	41
*410202N	N	.562	.999	1.003	.375	41
*410203	S	.781	1.375	1.379	.406	41
*410205	S	.687	1.499	1.503	.390	41
*410211	S	.750	1.624	1.628	.437	41
*410215	S	.875	1.624	1.628	.437	41
*410219	S	1.000	1.624	1.628	.437	41
*410219N	N	1.000	1.624	1.628	.437	41
*410222	S	.750	1.752	1.756	.437	41
*410230	S	1.000	1.752	1.756	.437	41
*410233	S	1.000	1.874	1.878	.437	41
*410236	S	1.125	1.874	1.878	.437	41
*410236H	H	1.125	1.874	1.878	.437	41
*410241	S	1.125	2.062	2.066	.437	41
*410244	S	1.250	2.062	2.066	.437	41
*410245	S	1.250	2.125	2.129	.437	41
*410247	S	1.312	2.125	2.129	.437	41
*410247N	N	1.312	2.125	2.129	.437	41
*410261	S	2.062	2.996	3.001	.500	41
*410262	S	1.562	2.623	2.627	.500	41
*410265	S	1.687	2.623	2.627	.500	41
*410265N	N	1.687	2.623	2.627	.500	41
*410272	S	1.875	2.686	2.690	.500	41
*410273	S	1.562	2.758	2.762	.500	41
*410283	S	1.875	2.758	2.762	.500	41
*410286	S	1.625	2.750	2.754	.500	41
*410286N	N	1.625	2.750	2.754	.500	41
*410291	S	1.750	2.875	2.879	.468	41
*410291N	N	1.750	2.875	2.879	.468	41
*410295	S	1.937	2.875	2.879	.468	41
*410295N	N	1.937	2.875	2.879	.468	41
*410298	S	1.875	3.000	3.005	.500	41
*410298N	N	1.875	3.000	3.005	.500	41
*410300	S	1.937	3.000	3.005	.500	41
*410301	S	2.000	3.000	3.005	.500	41
*410301V	V	2.000	3.000	3.005	.500	41
*410303	S	2.125	3.000	3.005	.500	41
*410303N	N	2.125	3.000	3.005	.500	41
*410304	S	1.875	3.061	3.066	.500	41
410308	**S**	**2.125**	**3.061**	**3.066**	**.500**	**41**
*410309	S	1.937	3.125	3.130	.500	41
*410310	S	2.000	3.125	3.130	.500	41
*410310H	H	2.000	3.125	3.130	.500	41
*410312	S	2.125	3.125	3.130	.500	41
410312N	N	2.125	3.125	3.130	.500	41
*410314	S	2.125	3.251	3.256	.500	41
*410315	S	2.187	3.251	3.256	.500	41
*410315N	N	2.187	3.251	3.256	.500	41
410316	S	2.250	3.251	3.256	.500	41
*410316H	H	2.250	3.251	3.256	.500	41
410316N	N	2.250	3.251	3.256	.500	41
*410317	S	2.312	3.251	3.256	.500	41
*410320	S	2.375	3.189	3.194	.437	41
*410320H	H	2.375	3.189	3.194	.437	41

For Illustration and Material Data See Technical Section

⬅ Hydrodynamic Lip Design-CCW

* The U.S. customer service number is 877-4-TIMKEN. The Canadian customer service numbers are 800-565-4927 (English) and 800-565-0438 (French-Canadian).

410000 SERIES (cont.)

Part No.	Lip Mat'l	Shaft Size	Hsg. Bore	Seal O.D.	Seal Width	Type/ Illus.
*410320N	N	2.375	3.189	3.194	.437	41
*410322	S	2.437	3.251	3.256	.500	41
*410324	S	2.437	3.371	3.376	.468	41
*410326	S	1.500	2.996	3.001	.500	41
*410330	S	2.500	3.371	3.376	.468	41
*410330N	N	2.500	3.371	3.376	.468	41
*410336	S	1.187	2.250	2.254	.500	41
*410340	S	.750	1.561	1.565	.375	41
*410341	S	1.250	2.713	2.717	.468	41
*410344	S	1.187	1.828	1.832	.437	41
*410350	S	2.375	3.371	3.376	.468	41
*410352	S	1.750	2.502	2.506	.500	41
*410354	S	2.187	3.189	3.194	.437	41
*410355	S	.687	1.250	1.254	.375	41
*410358	S	1.625	2.374	2.378	.500	41
*410358H	H	1.625	2.374	2.378	.500	41
*410358N	N	1.625	2.374	2.378	.500	41
*410359	S	1.750	2.996	3.001	.500	41
*410360	S	2.000	2.686	2.690	.500	41
*410361	S	1.750	2.561	2.565	.500	41
*410365	S	2.125	2.875	2.879	.468	41
*410369	S	1.531	2.623	2.627	.500	41
*410374	S	2.437	3.350	3.355	.468	41
*410374N	N	2.437	3.350	3.355	.468	41
*410375	S	1.763	2.412	2.416	.468	41
*410381	S	1.125	1.624	1.628	.437	41
*410389	S	2.000	2.750	2.754	.500	41
*410389N	N	2.000	2.750	2.754	.500	41
*410394	S	1.500	2.125	2.129	.437	41
*410394H	H	1.500	2.125	2.129	.437	41
*410394N	N	1.500	2.125	2.129	.437	41
*410398	S	.875	1.374	1.379	.406	41
*410403	S	1.375	2.062	2.066	.437	41
*410410	S	2.000	2.623	2.627	.500	41
*410418	S	1.562	2.875	2.879	.468	41
*410421	S	1.687	2.714	2.718	.468	41
*410424	S	.875	1.874	1.878	.437	41
*410433	S	2.250	3.125	3.130	.500	41
*410438	S	1.562	2.374	2.378	.500	41
*410441	S	2.250	2.996	3.001	.500	41
*410441N	N	2.250	2.996	3.001	.500	41
*410444	S	1.375	2.502	2.506	.500	41
*410444H	H	1.375	2.502	2.506	.500	41
*410449	S	1.000	1.561	1.565	.375	41
*410451	S	1.500	2.062	2.066	.437	41
*410452	S	1.375	2.835	2.839	.468	41
*410453	S	1.437	2.125	2.129	.437	41
*410453N	N	1.437	2.125	2.129	.437	41
*410453V	V	1.437	2.125	2.129	.437	41
*410456	S	1.375	2.716	2.720	.468	41
*410460	S	1.687	2.561	2.565	.500	41
*410461	S	1.500	2.750	2.754	.500	41
*410463	S	1.375	2.750	2.754	.500	41
*410467	S	1.625	3.251	3.256	.500	41
*410479	S	1.687	2.437	2.441	.468	41
*410481	S	1.250	2.437	2.441	.468	41
*410487	S	1.500	2.686	2.690	.500	41
*410489	S	2.187	2.875	2.879	.468	41
410496	**S**	**2.500**	**3.350**	**3.355**	**.468**	**41**
*410503	S	1.312	2.437	2.441	.468	41
*410504	S	1.375	2.623	2.627	.500	41
410519	S	2.500	3.251	3.256	.500	41
410520	S	2.250	3.000	3.005	.500	41
*410520N	N	2.250	3.000	3.005	.500	41
*410521	S	1.312	1.874	1.878	.437	41
*410522	S	1.375	2.000	2.004	.437	41
*410523	S	1.500	2.875	2.879	.468	41
410524	**S**	**1.875**	**3.371**	**3.376**	**.468**	**41**

410000 SERIES (cont.)

Part No.	Lip Mat'l	Shaft Size	Hsg. Bore	Seal O.D.	Seal Width	Type/ Illus.
*410525	S	2.437	3.125	3.130	.500	41
*410530	S	2.000	2.996	3.001	.375	41
*410530N	N	2.000	2.996	3.001	.375	41
*410536	S	.562	1.246	1.250	.375	41
*410539	S	1.625	3.000	3.005	.500	41
*410539N	N	1.625	3.000	3.005	.500	41
*410543	S	2.000	2.716	2.720	.468	41
*410551	S	2.312	3.125	3.130	.500	41
*410552	S	2.375	3.125	3.130	.500	41
*410552N	N	2.375	3.125	3.130	.500	41
*410553	S	1.000	1.499	1.503	.312	41
*410559	S	1.250	2.374	2.378	.500	41
*410562	S	1.687	2.374	2.378	.500	41
*410565	S	2.375	3.125	3.130	.375	41
*410565N	N	2.375	3.125	3.130	.375	41
*410567	S	.875	1.375	1.379	.312	41
*410571	S	2.000	3.251	3.256	.500	41
*410574	S	2.375	3.251	3.256	.500	41
*410574N	N	2.375	3.251	3.256	.500	41
*410580	S	.750	1.575	1.579	.375	41
*410596	S	1.687	2.835	2.839	.468	41
*410605	S	2.500	3.371	3.376	.375	41
*410610	S	.750	1.874	1.878	.437	41
*410614	S	2.250	3.251	3.256	.437	41
*410614N	N	2.250	3.251	3.256	.437	41
*410626	S	2.625	3.371	3.376	.468	41
*410626N	N	2.625	3.371	3.376	.468	41
*410639	S	2.125	2.835	2.839	.468	41
*410680	S	.875	1.499	1.503	.312	41
*410680N	N	.875	1.499	1.503	.312	41
*410681	S	2.187	3.125	3.130	.500	41
410686N	N	2.375	3.483	3.488	.500	41
410686N	N	2.375	3.483	3.488	.500	41
410694	**S**	**2.312**	**3.350**	**3.355**	**.375**	**41**
410708	**S**	**2.625**	**3.374**	**3.379**	**.468**	**41**
*410719	S	1.750	3.000	3.005	.500	41
*410720	S	1.875	3.125	3.130	.500	41
410737	**S**	**2.250**	**3.189**	**3.194**	**.437**	**41**
*410746	S	1.437	2.686	2.690	.500	41
*410751	S	1.562	2.686	2.690	.500	41
410752	**S**	**2.500**	**3.247**	**3.252**	**.500**	**41**
*410755	S	1.625	2.250	2.254	.500	41
*410765	S	1.687	2.716	2.720	.468	41
*410776	S	1.375	2.686	2.690	.500	41
*410781	S	.875	1.575	1.579	.375	41
*410791	S	.625	1.124	1.128	.312	41
410791V	V	.625	1.124	1.128	.312	41
*410795	S	1.625	2.441	2.445	.500	41
*410803	S	1.562	2.716	2.720	.468	41
*410806	S	1.250	2.835	2.839	.468	41
*410808	S	1.437	2.750	2.754	.500	41
*410814	S	1.500	2.441	2.445	.500	41
*410818	S	1.000	1.575	1.579	.375	41
410825	**S**	**2.375**	**3.623**	**3.628**	**.375**	**41**
*410867	S	2.125	2.875	2.879	.437	41
410867N	N	2.125	2.875	2.879	.437	41
*410867V	V	2.125	2.875	2.879	.437	41
*410895	S	.750	1.375	1.379	.312	41
*410929	S	1.750	2.374	2.378	.500	41
*410930	S	1.437	2.000	2.004	.437	41
*410930N	N	1.437	2.000	2.004	.437	41
*410965	S	1.937	3.350	3.355	.468	41
*410966	S	2.000	2.875	2.879	.500	41
*410972	S	2.125	3.371	3.376	.468	41
410972N	N	2.125	3.371	3.376	.468	41
*410975	S	.625	1.499	1.503	.390	41
*410984	S	1.500	2.716	2.720	.468	41
410987	**S**	**2.375**	**3.481**	**3.486**	**.437**	**41**

For Illustration and Material Data See Technical Section

* The U.S. customer service number is 877-4-TIMKEN. The Canadian customer service numbers are 800-565-4927 (English) and 800-565-0438 (French-Canadian).

410000 SERIES (cont.)

Part No.	Lip Mat'l	Shaft Size	Hsg. Bore	Seal O.D.	Seal Width	Type/ Illus.
*410988	S	2.375	3.061	3.066	.500	41
*410988N	N	2.375	3.061	3.066	.500	41
*410989	S	1.375	3.000	3.005	.500	41
*411000	S	1.375	2.250	2.254	.375	41
*411016	S	1.562	2.125	2.129	.437	41
*411024	S	.625	1.624	1.628	.437	41
*411030	S	1.750	2.717	2.721	.468	41
*411060	S	1.125	2.125	2.129	.437	41
*411078	S	1.875	3.251	3.256	.500	41
*411084	S	1.562	2.250	2.254	.500	41
*411091	S	2.000	3.062	3.066	.500	41
*411100	S	1.125	1.624	1.628	.312	41
*411100N	N	1.125	1.624	1.628	.312	41
*411105	S	1.375	2.875	2.879	.468	41
*411138	S	2.250	3.125	3.130	.375	41
411143N	N	2.625	3.251	3.256	.437	41
*411160	S	2.312	3.000	3.005	.500	41
*411160N	N	2.312	3.000	3.005	.500	41
411160V	V	2.312	3.000	3.005	.500	41
*411178	S	2.375	3.112	3.117	.500	41
*411234	S	2.250	3.061	3.066	.500	41
*411234N	N	2.250	3.061	3.066	.500	41
411245	**S**	**2.437**	**3.500**	**3.505**	**.375**	**41**
*411246	S	1.250	1.874	1.878	.437	41
411253	**S**	**2.250**	**3.350**	**3.355**	**.375**	**41**
*411268	S	1.375	2.000	2.004	.375	41
*411268N	N	1.375	2.000	2.004	.375	41
*411271	S	2.500	3.251	3.256	.375	41
*411272	S	2.250	3.000	3.005	.375	41
411275	V	3.250	4.249	4.254	.468	41
*411275H	H	3.250	4.249	4.254	.468	41
*411275N	N	3.250	4.249	4.254	.468	41
*411294	S	.500	1.124	1.128	.312	41
*411297	S	.687	1.125	1.129	.312	41
*411302	S	1.375	2.374	2.378	.437	41
*411316H	H	1.562	2.686	2.690	.375	41
*411324	S	.625	1.375	1.379	.312	41
411330	S	2.598	3.481	3.486	.500	41
411330N	**N**	**2.598**	**3.481**	**3.486**	**.500**	**41**
*411337	S	.781	1.752	1.756	.312	41
*411338	S	2.187	3.000	3.005	.500	41
*411341	S	2.250	2.996	3.001	.437	41
*411341N	N	2.250	2.996	3.001	.437	41
411348	**S**	**2.812**	**4.249**	**4.254**	**.468**	**41**
*411352	S	1.312	2.000	2.004	.437	41
411376	**S**	**2.250**	**3.500**	**3.505**	**.375**	**41**
*411385	S	.750	1.983	1.987	.437	41
411394	**S**	**2.312**	**3.251**	**3.256**	**.375**	**41**
*411414	S	3.375	4.376	4.381	.562	41
*411414N	N	3.375	4.376	4.381	.562	41
*411429N	N	2.000	2.880	2.884	.500	41
*411452	S	2.250	2.987	2.991	.500	41
*411456	S	1.187	1.874	1.878	.437	41
*411463	S	1.875	2.835	2.839	.468	41
*411475	S	2.625	3.543	3.548	.500	41
*411475N	N	2.625	3.543	3.548	.500	41
411500	**S**	**2.437**	**3.350**	**3.355**	**.375**	**41**
*411509H	H	2.500	3.250	3.256	.437	41
*411509N	N	2.500	3.250	3.256	.437	41
*411509V	V	2.500	3.250	3.256	.437	41
*411531	S	.562	1.124	1.128	.312	41
*411557	S	.562	1.375	1.379	.312	41
*411577	S	.625	1.499	1.503	.312	41
*411580	S	.750	1.499	1.503	.312	41
*411582	S	.937	1.499	1.504	.312	41
*411653	S	.625	1.624	1.628	.312	41
*411656	S	.750	1.624	1.628	.312	41
*411659	S	.875	1.624	1.628	.312	41

410000 SERIES (cont.)

Part No.	Lip Mat'l	Shaft Size	Hsg. Bore	Seal O.D.	Seal Width	Type/ Illus.
*411662	S	1.000	1.624	1.628	.312	41
*411698	S	.750	1.752	1.756	.312	41
*411700	S	.875	1.752	1.756	.312	41
*411703	S	1.000	1.752	1.756	.312	41
*411703N	N	1.000	1.752	1.756	.312	41
*411706	S	1.125	1.752	1.756	.312	41
*411709	S	1.250	1.752	1.756	.312	41
*411709V	V	1.250	1.752	1.756	.312	41
*411842	S	1.250	2.502	2.506	.500	41
*411847	S	1.375	2.561	2.565	.500	41
*411854	S	1.937	2.561	2.565	.500	41
*411857	S	1.500	2.623	2.627	.500	41
*411857N	N	1.500	2.623	2.627	.500	41
*411883	S	2.000	2.686	2.690	.437	41
*411883H	H	2.000	2.686	2.690	.437	41
*411923N	N	1.625	2.875	2.879	.437	41
*411936	S	1.875	2.875	2.879	.437	41
*411936N	N	1.875	2.875	2.879	.437	41
*411937	S	1.937	2.750	2.754	.500	41
*411940	S	1.937	2.875	2.879	.437	41
*411943	S	2.000	2.835	2.839	.468	41
*411944	S	2.000	2.875	2.879	.437	41
*411949	S	2.125	2.750	2.754	.500	41
*411949H	H	2.125	2.750	2.754	.500	41
*411949N	N	2.125	2.750	2.754	.500	41
*411952	S	2.187	2.835	2.839	.468	41
*411953	S	2.187	2.875	2.879	.437	41
*411953N	N	2.187	2.875	2.879	.437	41
*411962	S	1.562	2.996	3.001	.500	41
*411978N	N	1.625	3.125	3.130	.500	41
*411983	S	1.750	2.996	3.001	.437	41
*412008	S	2.000	2.996	3.001	.437	41
*412012	S	2.062	3.000	3.005	.375	41
412015V	V	2.125	3.000	3.005	.375	41
*412016	S	2.125	3.125	3.130	.375	41
*412016N	N	2.125	3.125	3.130	.375	41
*412017	S	2.187	2.996	3.001	.437	41
*412018	S	2.187	3.000	3.005	.375	41
*412019	S	2.187	3.062	3.066	.500	41
*412020	S	2.187	3.125	3.130	.375	41
*412022	S	1.875	3.251	3.256	.437	41
412027	**S**	**2.000**	**3.251**	**3.256**	**.437**	**41**
412028	**S**	**2.000**	**3.350**	**3.355**	**.468**	**41**
*412032	S	2.125	3.251	3.256	.437	41
*412035	S	2.187	3.371	3.376	.468	41
*412038	S	2.375	3.251	3.256	.437	41
412038N	N	2.375	3.251	3.256	.437	41
412040	**S**	**2.437**	**3.251**	**3.256**	**.437**	**41**
412119	**S**	**2.375**	**3.350**	**3.355**	**.375**	**41**
412473	**S**	**3.375**	**4.376**	**4.381**	**.375**	**41**
*412572	S	1.875	2.750	2.754	.312	41
*412691	S	1.375	2.374	2.378	.750	41
412725	**S**	**2.000**	**3.150**	**3.155**	**.375**	**41**
412798N	N	2.062	3.000	3.005	.437	41
412861	**S**	**2.375**	**3.543**	**3.548**	**.375**	**41**
412871	**S**	**2.625**	**3.350**	**3.355**	**.375**	**41**
412920	**S**	**2.250**	**3.371**	**3.376**	**.375**	**41**
412920V	**V**	**2.250**	**3.371**	**3.376**	**.375**	**41**
412943	**S**	**2.187**	**3.350**	**3.355**	**.375**	**41**
*413244	S	2.187	2.875	2.879	.375	41
*413244N	N	2.187	2.875	2.879	.375	41
*413245	S	2.187	3.251	3.256	.375	41
413246	S	2.375	3.251	3.256	.375	41
413246N	**N**	**2.375**	**3.251**	**3.255**	**.375**	**41**
413247	**S**	**2.375**	**3.371**	**3.376**	**.375**	**41**
413248	**S**	**2.625**	**3.371**	**3.376**	**.375**	**41**
*413293	S	1.187	2.125	2.129	.375	41
*413293N	N	1.187	2.125	2.129	.375	41

For Illustration and Material Data See Technical Section

* The U.S. customer service number is 877-4-TIMKEN. The Canadian customer service numbers are 800-565-4927 (English) and 800-565-0438 (French-Canadian).

410000 SERIES (cont.)

Part No.	Lip Mat'l	Shaft Size	Hsg. Bore	Seal O.D.	Seal Width	Type/ Illus.
∗413310	S	1.609	2.750	2.754	.500	41
413469	**S**	**2.125**	**3.350**	**3.355**	**.375**	**41**
413470	**S**	**2.125**	**3.371**	**3.376**	**.375**	**41**
413470V	V	2.125	3.371	3.376	.375	41
413472	**S**	**2.187**	**3.371**	**3.376**	**.375**	**41**
∗413477	S	2.437	3.251	3.256	.375	41
413478	**S**	**2.437**	**3.371**	**3.376**	**.375**	**41**
413479	S	2.562	3.481	3.486	.375	41
∗413638	S	1.375	3.543	3.548	.500	41
∗413697N	N	1.343	2.106	2.110	.312	41
∗413799	S	1.625	2.087	2.091	.275	41
413818★	S	*50,00*	*70,00*	*70,10*	*7,00*	41
		1.969	2.756	2.760	.276	
414045	**S**	**1.875**	**2.782**	**2.786**	**.500**	**41**
∗414072★	S	*62,00*	*85,00*	*85,13*	*8,00*	41
		2.441	3.346	3.352	.315	
414268	**S**	**1.625**	**3.000**	**3.004**	**.312**	**41**
415001	**S**	**2.500**	**3.543**	**3.548**	**.500**	**41**
415001N	N	2.500	3.543	3.548	.500	41
∗415002	S	2.562	3.623	3.628	.468	41
∗415002H	H	2.562	3.623	3.628	.468	41
415003	S	2.625	3.623	3.628	.468	41
∗415003N	N	2.625	3.623	3.628	.468	41
∗415003V	V	2.625	3.623	3.628	.468	41
415004	S	2.750	3.751	3.756	.500	41
∗415004H	H	2.750	3.751	3.756	.500	41
∗415004N	N	2.750	3.751	3.756	.500	41
415004V	V	2.750	3.751	3.756	.500	41
∗415006	S	2.875	3.751	3.756	.500	41
∗415006N	N	2.875	3.751	3.756	.500	41
∗415006V	V	2.875	3.751	3.756	.500	41
415007	**S**	**2.625**	**3.876**	**3.881**	**.468**	**41**
415009	S	2.750	3.876	3.881	.468	41
415009N	N	2.750	3.876	3.881	.468	41
∗415011	S	2.875	4.003	4.008	.468	41
∗415011H	H	2.875	4.003	4.008	.468	41
∗415011N	N	2.875	4.003	4.008	.468	41
∗415012	S	2.937	4.003	4.008	.468	41
∗415012N	N	2.937	4.003	4.008	.468	41
415012V	V	2.937	4.003	4.008	.468	41
415013	S	3.000	4.003	4.008	.468	41
415013N	N	3.000	4.003	4.008	.468	41
∗415013V	V	3.000	4.003	4.008	.468	41
∗415014	S	3.000	4.249	4.254	.625	41
∗415014N	N	3.000	4.249	4.254	.625	41
∗415016	S	3.125	4.249	4.254	.625	41
415016N	N	3.125	4.249	4.254	.625	41
∗415018	S	3.250	4.249	4.254	.625	41
∗415018N	N	3.250	4.249	4.254	.625	41
∗415019	S	3.000	4.999	5.004	.468	41
415021	**S**	**3.125**	**4.999**	**5.004**	**.468**	**41**
415023	**S**	**3.250**	**4.999**	**5.004**	**.468**	**41**
415025	**S**	**3.375**	**4.999**	**5.004**	**.468**	**41**
∗415025N	N	3.375	4.999	5.004	.468	41
415027	**S**	**3.500**	**4.999**	**5.004**	**.468**	**41**
415027H	H	3.500	4.999	5.004	.468	41
415027N	N	3.500	4.999	5.004	.468	41
∗415029	S	3.625	4.999	5.004	.468	41
∗415031	S	3.750	4.999	5.004	.468	41
∗415031H	H	3.750	4.999	5.004	.468	41
∗415031N	N	3.750	4.999	5.004	.468	41
∗415033	S	3.875	4.999	5.004	.468	41
∗415033N	N	3.875	4.999	5.004	.468	41
415034	**S**	**3.937**	**4.999**	**5.004**	**.468**	**41**
415035	**S**	**4.000**	**4.999**	**5.004**	**.468**	**41**
∗415035N	N	4.000	4.999	5.004	.468	41
415035V	V	4.000	4.999	5.004	.468	41
415036	**S**	**4.000**	**5.501**	**5.506**	**.562**	**41**

410000 SERIES (cont.)

Part No.	Lip Mat'l	Shaft Size	Hsg. Bore	Seal O.D.	Seal Width	Type/ Illus.
∗415036N	N	4.000	5.500	5.506	.562	41
∗415039	S	4.187	5.501	5.506	.562	41
∗415039N	N	4.187	5.501	5.506	.562	41
∗415040	S	4.250	5.501	5.506	.562	41
∗415040N	N	4.250	5.501	5.506	.562	41
415041	**S**	**4.000**	**5.751**	**5.756**	**.562**	**41**
∗415041N	N	4.000	5.751	5.756	.562	41
415043	**S**	**4.125**	**5.751**	**5.756**	**.562**	**41**
∗415044	S	4.187	5.751	5.756	.562	41
415045	**S**	**4.250**	**5.751**	**5.756**	**.562**	**41**
415047	**S**	**4.375**	**5.751**	**5.756**	**.562**	**41**
∗415049	S	4.500	5.751	5.756	.562	41
415052	S	8.000	10.125	10.133	.750	41
∗415053	S	4.750	5.751	5.756	.562	41
∗415053H	H	4.750	5.751	5.756	.562	41
∗415053N	N	4.750	5.751	5.756	.562	41
∗415053V	V	4.750	5.751	5.756	.562	41
∗415054	S	4.000	6.250	6.256	.562	41
415058	**S**	**4.250**	**6.250**	**6.256**	**.562**	**41**
415060	S	4.375	6.250	6.256	.562	41
∗415062	S	4.500	6.250	6.256	.562	41
∗415062H	H	4.500	6.250	6.256	.562	41
415064	S	4.625	6.250	6.256	.562	41
415066	**S**	**4.750**	**6.250**	**6.256**	**.562**	**41**
∗415068	S	4.875	6.250	6.256	.562	41
∗415068N	N	4.875	6.250	6.256	.562	41
∗415070	S	5.000	6.250	6.256	.562	41
∗415070N	N	5.000	6.250	6.256	.562	41
∗415070V	V	5.000	6.250	6.256	.562	41
∗415071	S	5.125	6.374	6.382	.625	41
415072	**S**	**6.000**	**7.500**	**7.508**	**.562**	**41**
∗415072H	H	6.000	7.500	7.508	.562	41
∗415072V	V	6.000	7.500	7.508	.562	41
∗415073	S	5.500	6.749	6.756	.625	41
∗415073H	H	5.500	6.749	6.756	.625	41
∗415073N	N	5.500	6.749	6.756	.625	41
∗415073V	V	5.500	6.749	6.756	.625	41
415074	**S**	**6.125**	**7.500**	**7.508**	**.562**	**41**
∗415074H	H	6.125	7.500	7.508	.562	41
∗415074N	N	6.125	7.500	7.508	.562	41
∗415075	S	5.875	7.125	7.133	.625	41
∗415075N	N	5.875	7.125	7.133	.625	41
415076	**S**	**11.500**	**13.500**	**13.508**	**.750**	**41**
∗415076V	V	11.500	13.500	13.508	.750	41
415077	**S**	**11.500**	**13.000**	**13.010**	**.750**	**41**
∗415079	S	2.500	3.751	3.756	.500	41
∗415080	S	2.125	3.623	3.628	.468	41
415082	**S**	**2.500**	**3.876**	**3.881**	**.468**	**41**
415082N	N	2.500	3.876	3.881	.468	41
∗415084	S	7.000	8.500	8.509	.750	41
∗415084N	N	7.000	8.500	8.509	.750	41
415085	**S**	**3.312**	**4.499**	**4.504**	**.468**	**41**
∗415086	S	3.000	4.249	4.254	.468	41
415086N	N	3.000	4.249	4.254	.468	41
∗415086V	V	3.000	4.249	4.254	.468	41
415088	**S**	**3.000**	**4.499**	**4.504**	**.468**	**41**
∗415088N	N	3.000	4.499	4.504	.468	41
415090	**S**	**9.000**	**11.000**	**11.008**	**.750**	**41**
∗415091	S	4.875	5.999	6.007	.625	41
∗415092	S	6.750	8.250	8.257	.750	41
∗415093	S	2.250	3.500	3.505	.500	41
∗415093N	N	2.250	3.500	3.505	.500	41
∗415094	S	2.312	3.500	3.505	.500	41
∗415095	S	2.375	3.500	3.505	.500	41
∗415095N	N	2.375	3.500	3.505	.500	41
∗415096	S	2.437	3.500	3.505	.500	41
∗415096N	N	2.437	3.500	3.505	.500	41
∗415098	S	2.562	3.500	3.505	.500	41

For Illustration and Material Data See Technical Section

∗ The U.S. customer service number is 877-4-TIMKEN. The Canadian customer service numbers are 800-565-4927 (English) and 800-565-0438 (French-Canadian). ★ Metric Seal

410000 SERIES (cont.)

Part No.	Lip Mat'l	Shaft Size	Hsg. Bore	Seal O.D.	Seal Width	Type/ Illus.
415098N	N	2.562	3.500	3.505	.500	41
*415101	S	2.750	4.249	4.254	.625	41
*415104	S	5.250	6.499	6.507	.625	41
*415104H	H	5.250	6.499	6.507	.625	41
*415104N	N	5.250	6.499	6.507	.625	41
*415105	S	5.375	6.624	6.632	.625	41
*415105V	V	5.375	6.624	6.632	.625	41
*415110	S	6.375	7.875	7.881	.750	41
*415111	S	6.500	8.000	8.009	.750	41
*415115	S	7.125	8.625	8.634	.750	41
*415115N	N	7.125	8.625	8.634	.750	41
415116	**S**	**7.250**	**8.750**	**8.759**	**.750**	**41**
*415120	S	7.750	9.250	9.258	.750	41
*415122	S	8.000	10.000	10.008	.750	41
415124	**S**	**8.250**	**10.250**	**10.260**	**.750**	**41**
415128	**S**	**8.750**	**10.750**	**10.758**	**.750**	**41**
*415130	S	1.937	3.543	3.548	.500	41
*415134	S	4.125	4.999	5.004	.468	41
*415134N	N	4.125	4.999	5.004	.468	41
415137	S	3.250	4.499	4.504	.468	41
415138	**S**	**4.750**	**5.750**	**5.756**	**.500**	**41**
*415138H	H	4.750	5.750	5.756	.500	41
*415138N	N	4.750	5.750	5.756	.500	41
*415140	S	5.375	6.749	6.757	.625	41
415142	**S**	**4.125**	**5.251**	**5.256**	**.468**	**41**
*415144	S	2.875	4.499	4.504	.468	41
*415145	S	3.125	4.499	4.504	.468	41
*415145N	N	3.125	4.499	4.504	.468	41
*415145V	V	3.125	4.499	4.504	.468	41
415146	S	3.500	4.499	4.504	.468	41
*415146N	N	3.500	4.499	4.504	.468	41
415147	S	2.500	3.500	3.505	.500	41
415147N	N	2.500	3.500	3.505	.500	41
*415148	S	3.875	5.251	5.256	.468	41
*415149	S	2.625	3.751	3.756	.500	41
*415149V	V	2.625	3.751	3.756	.500	41
415150	**S**	**3.750**	**5.251**	**5.256**	**.468**	**41**
*415152	S	2.875	4.125	4.130	.562	41
*415154	S	3.000	4.125	4.130	.562	41
*415156	S	3.125	4.125	4.130	.562	41
*415156H	H	3.125	4.125	4.130	.562	41
415156N	N	3.125	4.125	4.130	.562	41
*415158	S	3.000	4.376	4.381	.625	41
*415158N	N	3.000	4.376	4.381	.625	41
*415160	S	3.125	4.376	4.381	.625	41
*415162	S	3.250	4.376	4.381	.625	41
*415164	S	3.375	4.376	4.381	.625	41
415164N	N	3.375	4.376	4.381	.625	41
*415165	S	3.375	4.499	4.504	.468	41
*415165H	H	3.375	4.499	4.504	.468	41
415170	S	3.500	4.626	4.631	.625	41
*415172	S	3.625	4.626	4.631	.625	41
*415172N	N	3.625	4.625	4.631	.625	41
*415172V	V	3.625	4.626	4.631	.625	41
*415173	S	3.500	4.751	4.756	.625	41
*415173N	N	3.500	4.751	4.756	.625	41
*415175	S	3.625	4.751	4.756	.625	41
*415177	S	3.750	4.751	4.756	.625	41
*415179	S	3.875	4.751	4.756	.625	41
*415181	S	3.625	4.876	4.881	.625	41
*415183	S	3.750	4.876	4.881	.625	41
*415185	S	3.875	4.876	4.881	.625	41
*415185H	H	3.875	4.876	4.881	.625	41
*415185N	N	3.875	4.876	4.881	.625	41
*415186★	S	*100,00*	*123,85*	*124,00*	*15,88*	41
		3.937	4.876	4.882	.625	
415187	**S**	**4.000**	**4.876**	**4.881**	**.625**	**41**
*415188	S	4.000	5.126	5.131	.625	41

410000 SERIES (cont.)

Part No.	Lip Mat'l	Shaft Size	Hsg. Bore	Seal O.D.	Seal Width	Type/ Illus.
*415192	S	4.000	5.251	5.256	.468	41
415192N	N	4.000	5.251	5.256	.468	41
*415195	S	4.250	5.251	5.256	.468	41
*415195N	N	4.250	5.251	5.256	.468	41
415196	**S**	**4.250**	**5.376**	**5.381**	**.500**	**41**
*415196H	H	4.250	5.376	5.381	.500	41
*415196N	N	4.250	5.376	5.381	.500	41
*415198	S	4.375	5.501	5.506	.562	41
*415198H	H	4.375	5.501	5.506	.562	41
*415200	S	4.500	5.501	5.506	.562	41
*415200N	N	4.500	5.501	5.506	.562	41
*415200V	V	4.500	5.501	5.506	.562	41
*415201	S	4.000	5.999	6.007	.625	41
*415205	S	4.250	5.999	6.007	.625	41
*415207	S	4.375	5.999	6.007	.625	41
*415209	S	4.500	5.999	6.007	.625	41
*415209N	N	4.500	5.999	6.007	.625	41
*415211	S	4.625	6.001	6.007	.625	41
*415213	S	4.750	5.999	6.007	.625	41
415213N	N	4.750	5.999	6.007	.625	41
415219	**S**	**9.250**	**11.250**	**11.260**	**.750**	**41**
*415219N	N	9.250	11.250	11.260	.750	41
415227	**S**	**10.500**	**12.500**	**12.508**	**1.000**	**41**
*415227V	V	10.500	12.500	12.508	1.000	41
415234	**S**	**2.250**	**3.623**	**3.628**	**.468**	**41**
*415244	S	2.562	3.751	3.756	.500	41
*415244N	N	2.562	3.751	3.756	.500	41
*415245	S	3.125	4.751	4.756	.625	41
*415245N	N	3.125	4.751	4.756	.625	41
*415248	S	2.375	3.543	3.548	.500	41
415248N	N	2.375	3.543	3.548	.500	41
415254	**S**	**2.250**	**4.003**	**4.008**	**.468**	**41**
415259	**S**	**2.250**	**3.751**	**3.756**	**.500**	**41**
*415262	S	3.500	5.501	5.506	.562	41
415263	**S**	**3.937**	**5.376**	**5.381**	**.500**	**41**
*415265	S	3.250	4.751	4.756	.625	41
*415265N	N	3.250	4.751	4.756	.625	41
*415269	S	3.687	5.501	5.506	.562	41
*415270	S	10.000	11.000	11.010	.750	41
*415271	S	5.000	5.999	6.007	.625	41
*415271H	H	5.000	5.999	6.007	.625	41
*415271N	N	5.000	5.999	6.007	.625	41
*415272	S	2.750	4.003	4.008	.468	41
415272N	N	2.750	4.003	4.008	.468	41
*415273	S	5.500	6.499	6.507	.625	41
*415273N	N	5.500	6.499	6.507	.625	41
*415281	S	3.000	3.751	3.756	.500	41
415281N	N	3.000	3.751	3.756	.500	41
*415281V	V	3.000	3.751	3.756	.500	41
415284	**S**	**4.687**	**5.751**	**5.756**	**.500**	**41**
415294	**S**	**6.500**	**7.500**	**7.508**	**.562**	**41**
*415294N	N	6.500	7.500	7.508	.562	41
415295	**S**	**4.187**	**4.999**	**5.004**	**.468**	**41**
*415295H	H	4.187	4.999	5.004	.468	41
*415296	S	2.625	4.003	4.008	.468	41
*415296N	N	2.625	4.003	4.008	.468	41
*415299	S	8.000	9.250	9.260	.750	41
*415300	S	8.000	9.500	9.510	.750	41
*415300N	N	8.000	9.500	9.510	.750	41
415302	**S**	**2.562**	**3.500**	**3.505**	**.375**	**41**
415303	**S**	**2.875**	**3.623**	**3.628**	**.375**	**41**
415304	S	3.250	4.249	4.254	.500	41
*415304N	N	3.250	4.249	4.254	.500	41
*415304V	V	3.250	4.249	4.254	.500	41
*415308	S	1.500	3.543	3.548	.500	41
*415312	S	5.000	6.374	6.382	.625	41
*415315	S	2.750	3.623	3.628	.468	41
*415315N	N	2.750	3.623	3.628	.468	41

For Illustration and Material Data See Technical Section

* The U.S. customer service number is 877-4-TIMKEN. The Canadian customer service numbers are 800-565-4927 (English) and 800-565-0438 (French-Canadian). ★ Metric Seal

410000 SERIES (cont.)

Part No.	Lip Mat'l	Shaft Size	Hsg. Bore	Seal O.D.	Seal Width	Type/ Illus.
415317	S	7.375	9.000	9.010	.750	41
*415319	S	3.500	5.126	5.131	.625	41
*415319N	N	3.500	5.126	5.131	.625	41
415322	S	2.750	3.543	3.548	.500	41
*415322N	N	2.750	3.543	3.548	.500	41
415322V	V	2.750	3.543	3.548	.500	41
415327	**S**	**6.750**	**8.000**	**8.009**	**.625**	**41**
*415327H	H	6.750	8.000	8.009	.625	41
*415327N	N	6.750	8.000	8.009	.625	41
*415328	S	3.250	5.251	5.256	.468	41
*415330	S	6.125	7.125	7.133	.625	41
*415342	S	4.500	5.876	5.881	.625	41
*415345N	N	2.500	3.500	3.505	.375	41
*415345V	V	2.500	3.500	3.505	.375	41
*415347	S	2.937	3.876	3.881	.468	41
*415347N	N	2.937	3.876	3.881	.468	41
415349	**S**	**2.125**	**3.543**	**3.548**	**.500**	**41**
*415349N	N	2.125	3.543	3.548	.500	41
*415349V	V	2.125	3.543	3.548	.500	41
415350	**S**	**2.187**	**3.623**	**3.628**	**.468**	**41**
415351	**S**	**4.500**	**6.250**	**6.256**	**.500**	**41**
*415352	S	9.125	10.377	10.384	.625	41
*415354	S	3.125	4.003	4.008	.468	41
*415354N	N	3.125	4.003	4.008	.468	41
*415355	S	2.875	3.876	3.881	.468	41
*415355N	N	2.875	3.876	3.881	.468	41
*415356	S	2.937	4.499	4.504	.468	41
*415356N	N	2.937	4.499	4.504	.468	41
*415356V	V	2.937	4.499	4.504	.468	41
*415363	S	5.750	6.749	6.756	.625	41
*415363H	H	5.750	6.749	6.756	.625	41
*415364	S	2.750	3.500	3.505	.500	41
*415364H	H	2.750	3.500	3.505	.500	41
*415368	S	2.625	3.500	3.505	.500	41
*415368N	N	2.625	3.500	3.505	.500	41
*415369	S	2.500	3.623	3.628	.468	41
*415369H	H	2.500	3.623	3.628	.468	41
*415369N	N	2.500	3.623	3.628	.468	41
415371	**S**	**4.625**	**5.751**	**5.756**	**.562**	**41**
*415371N	N	4.625	5.751	5.756	.562	41
*415377	S	5.000	6.499	6.507	.625	41
415379	**S**	**3.750**	**4.751**	**4.756**	**.500**	**41**
*415379H	H	3.750	4.751	4.756	.500	41
*415379N	N	3.750	4.751	4.756	.500	41
415379V	V	3.750	4.751	4.756	.500	41
*415380N	N	2.375	3.623	3.628	.468	41
415389	**S**	**3.625**	**4.499**	**4.504**	**.468**	**41**
415389N	N	3.625	4.499	4.504	.468	41
415394	**S**	**3.125**	**5.251**	**5.256**	**.468**	**41**
*415396	S	3.500	5.751	5.756	.562	41
*415423	S	3.750	5.501	5.506	.562	41
415425	S	4.375	5.376	5.381	.500	41
*415425V	V	4.375	5.376	5.381	.500	41
415436	S	3.625	5.751	5.756	.562	41
415437	**S**	**3.500**	**4.751**	**4.756**	**.500**	**41**
415442	**S**	**3.375**	**4.125**	**4.130**	**.375**	**41**
415447	**S**	**5.750**	**6.624**	**6.632**	**.625**	**41**
415449	**S**	**2.500**	**3.500**	**3.505**	**.375**	**41**
415449A	A	2.500	3.500	3.505	.375	41
*415449N	N	2.500	3.500	3.505	.375	41
415449V	**V**	**2.500**	**3.500**	**3.505**	**.375**	**41**
415458	**S**	**2.625**	**3.623**	**3.628**	**.375**	**41**
415458A	A	2.625	3.623	3.628	.375	41
415458V	**V**	**2.625**	**3.623**	**3.628**	**.375**	**41**
*415460	S	5.000	7.500	7.507	.562	41
*415460N	N	5.000	7.500	7.507	.562	41
*415461	S	5.375	6.499	6.507	.625	41
*415461N	N	5.375	6.499	6.507	.625	41

410000 SERIES (cont.)

Part No.	Lip Mat'l	Shaft Size	Hsg. Bore	Seal O.D.	Seal Width	Type/ Illus.
*415479	S	3.000	3.876	3.881	.468	41
*415479N	N	3.000	3.876	3.881	.468	41
*415480	S	6.250	7.500	7.508	.562	41
415482	**S**	**11.000**	**13.000**	**13.010**	**.750**	**41**
415483	**S**	**2.625**	**3.500**	**3.505**	**.375**	**41**
*415487	S	5.625	6.625	6.631	.625	41
*415487N	N	5.625	6.625	6.631	.625	41
*415489	S	8.500	10.000	10.010	.750	41
*415489V	V	8.500	10.000	10.010	.750	41
*415495	S	5.125	6.499	6.507	.625	41
415498	**S**	**3.562**	**4.499**	**4.504**	**.468**	**41**
*415513	S	4.000	5.626	5.631	.500	41
*415517	S	7.000	8.000	8.009	.750	41
*415526N	N	3.000	3.876	3.881	.500	41
*415547	S	3.875	5.126	5.131	.625	41
415551	**S**	**7.500**	**9.000**	**9.010**	**.750**	**41**
*415551N	N	7.500	9.000	9.010	.750	41
415551V	V	7.500	9.000	9.010	.750	41
415559	**S**	**3.500**	**5.251**	**5.256**	**.468**	**41**
415563	S	3.250	4.003	4.008	.468	41
*415563N	N	3.250	4.003	4.008	.468	41
*415566	S	3.250	4.125	4.130	.562	41
*415566N	N	3.250	4.125	4.130	.562	41
*415566V	V	3.250	4.125	4.130	.562	41
*415573	S	4.375	6.127	6.132	.625	41
415577	**S**	**3.250**	**4.723**	**4.729**	**.468**	**41**
*415577N	N	3.250	4.723	4.729	.468	41
415610	S	5.500	7.000	7.007	.625	41
*415613	S	3.375	4.249	4.254	.625	41
415627	**S**	**2.000**	**3.500**	**3.505**	**.500**	**41**
*415634	S	4.625	5.751	5.756	.500	41
*415636	S	2.187	3.500	3.505	.500	41
415645	**S**	**5.250**	**6.500**	**6.507**	**.562**	**41**
*415648	S	13.000	15.000	15.008	.750	41
*415655	S	2.500	4.003	4.008	.468	41
415656	S	8.000	9.000	9.010	.750	41
*415659	S	2.125	3.500	3.505	.500	41
415683	**S**	**6.000**	**7.000**	**7.007**	**.500**	**41**
415697	**S**	**3.875**	**5.125**	**5.131**	**.500**	**41**
415711	**S**	**3.562**	**4.625**	**4.631**	**.500**	**41**
*415712	S	4.250	5.251	5.256	.625	41
415725	**S**	**5.000**	**6.001**	**6.007**	**.500**	**41**
*415725N	N	5.000	6.001	6.007	.500	41
*415733	S	2.750	3.751	3.756	.437	41
415832	S	3.625	5.375	5.381	.500	41
415836	S	3.000	4.003	4.008	.437	41
415836V	V	3.000	4.003	4.008	.437	41
415836N	N	3.000	4.003	4.008	.437	41
*415852	S	3.750	5.751	5.756	.562	41
415854	**S**	**6.250**	**7.875**	**7.881**	**.750**	**41**
415857	**S**	**2.375**	**3.601**	**3.606**	**.437**	**41**
*415859	S	7.117	8.126	8.134	.750	41
415867	**S**	**7.500**	**8.500**	**8.509**	**.625**	**41**
415871	S	9.375	11.375	11.385	.750	41
*415871H	H	9.375	11.375	11.385	.750	41
415876	**S**	**7.000**	**9.313**	**9.321**	**.625**	**41**
415876V	V	7.000	9.313	9.321	.625	41
415894	S	3.375	4.376	4.381	.500	41
415897	S	5.000	6.877	6.884	.625	41
*415897N	N	5.000	6.877	6.884	.625	41
*415899	S	3.500	4.375	4.381	.562	41
415899N	N	3.500	4.375	4.381	.562	41
*415913	S	6.500	7.382	7.392	.622	41
*415913N	N	6.500	7.382	7.392	.622	41
*415920	S	5.625	6.625	6.631	.500	41
*415927	S	7.125	8.007	8.017	.625	41
415937	**S**	**3.625**	**4.751**	**4.756**	**.500**	**41**
415938	**S**	**5.375**	**6.624**	**6.632**	**.562**	**41**

For Illustration and Material Data See Technical Section

* The U.S. customer service number is 877-4-TIMKEN. The Canadian customer service numbers are 800-565-4927 (English) and 800-565-0438 (French-Canadian).

410000 SERIES (cont.)

Part No.	Lip Mat'l	Shaft Size	Hsg. Bore	Seal O.D.	Seal Width	Type/ Illus.
415953	S	4.000	4.999	5.004	.500	41
*415953H	H	4.000	4.999	5.004	.500	41
*415953N	N	4.000	4.999	5.004	.500	41
415953V	V	4.000	4.999	5.004	.500	41
415958	**S**	**3.875**	**5.376**	**5.381**	**.500**	**41**
415960	**S**	**2.750**	**3.876**	**3.881**	**.375**	**41**
415962	**S**	**3.000**	**4.331**	**4.336**	**.500**	**41**
*415963N	N	3.750	4.751	4.756	.484	41
*415963V	V	3.750	4.751	4.756	.484	41
*415970	S	4.625	6.125	6.131	.562	41
*415970H	H	4.625	6.125	6.131	.562	41
*415971	S	2.375	3.500	3.505	.703	41
*415971H	H	2.375	3.500	3.505	.703	41
*415972	S	2.562	3.624	3.629	.703	41
415983	S	3.750	4.499	4.506	.468	41
415983N	N	3.750	4.499	4.506	.468	41
415983V	V	3.750	4.499	4.506	.468	41
415984	**S**	**2.750**	**3.623**	**3.628**	**.375**	**41**
415988	**S**	**2.562**	**3.623**	**3.628**	**.375**	**41**
415991	**S**	**3.500**	**4.501**	**4.506**	**.468**	**41**
415991N	N	3.500	4.501	4.506	.468	41
415991V	V	3.500	4.501	4.506	.468	41
415995	**S**	**3.000**	**4.003**	**4.008**	**.375**	**41**
415995A	A	3.000	4.003	4.008	.375	41
*415995N	N	3.000	4.003	4.008	.375	41
415995V	**V**	**3.000**	**4.003**	**4.008**	**.375**	**41**
416008	S	6.750	8.500	8.509	.625	41
416011	S	3.125	4.125	4.130	.500	41
*416011V	V	3.125	4.125	4.130	.500	41
416024	**S**	**3.125**	**4.751**	**4.756**	**.500**	**41**
*416026	S	3.000	4.249	4.254	.500	41
416029	S	5.750	7.874	7.881	.750	41
416029N	**N**	**5.750**	**7.874**	**7.881**	**.750**	**41**
*416037	S	3.908	4.875	4.881	.500	41
416039	**S**	**5.750**	**7.500**	**7.508**	**.562**	**41**
416041	S	3.750	4.626	4.632	.500	41
416043	S	3.875	5.751	5.756	.562	41
416044	**S**	**7.250**	**8.250**	**8.257**	**.625**	**41**
416047	S	3.625	4.625	4.631	.500	41
*416049N	N	5.125	6.874	6.882	.625	41
*416055	S	6.000	7.000	7.008	.625	41
*416055N	N	6.000	7.000	7.008	.625	41
416070	**S**	**4.500**	**6.125**	**6.131**	**.562**	**41**
416071	**S**	**2.375**	**3.751**	**3.756**	**.500**	**41**
416077	**S**	**7.125**	**8.625**	**8.632**	**.562**	**41**
*416077N	N	7.125	8.625	8.632	.562	41
*416100	S	10.625	13.000	13.008	.750	41
416102	S	7.625	8.625	8.632	.562	41
416107	**S**	**5.500**	**6.750**	**6.758**	**.575**	**41**
416112	S	5.375	7.874	7.881	.750	41
*416112N	N	5.375	7.874	7.881	.750	41
*416113V	V	3.562	4.500	4.506	.500	41
*416122H	H	4.750	5.999	6.006	.562	41
416125	**S**	**3.625**	**4.999**	**5.004**	**.500**	**41**
416127	**S**	**3.750**	**5.376**	**5.381**	**.500**	**41**
*416128	S	3.875	5.501	5.506	.562	41
416130	**S**	**4.000**	**5.376**	**5.381**	**.500**	**41**
416135	**S**	**4.250**	**5.626**	**5.631**	**.500**	**41**
*416136	S	4.250	5.876	5.881	.625	41
*416136N	N	4.250	5.876	5.881	.625	41
416137	**S**	**4.250**	**5.999**	**6.005**	**.500**	**41**
416144	S	4.312	5.999	6.005	.500	41
416147	S	4.375	5.626	5.631	.500	41
416149	**S**	**4.375**	**5.999**	**6.005**	**.500**	**41**
416153	**S**	**4.500**	**5.625**	**5.631**	**.500**	**41**
*416153V	V	4.500	5.625	5.631	.500	41
416154	**S**	**4.500**	**5.999**	**6.007**	**.500**	**41**
416156	**S**	**4.625**	**5.625**	**5.631**	**.500**	**41**

410000 SERIES (cont.)

Part No.	Lip Mat'l	Shaft Size	Hsg. Bore	Seal O.D.	Seal Width	Type/ Illus.
416158	**S**	**4.625**	**5.999**	**6.007**	**.500**	**41**
416163	S	4.812	5.999	6.007	.500	41
416167	**S**	**4.875**	**5.999**	**6.007**	**.500**	**41**
*416167N	N	4.875	5.999	6.007	.500	41
*416172	S	5.125	6.125	6.131	.562	41
*416173	S	5.125	6.250	6.256	.562	41
*416173N	N	5.125	6.250	6.256	.562	41
*416176	S	5.000	7.000	7.008	.625	41
*416189	S	5.500	6.624	6.631	.625	41
*416190	S	5.500	6.874	6.882	.625	41
416191	S	5.500	7.125	7.133	.625	41
*416195	S	5.500	8.000	8.009	.625	41
*416196	S	5.500	8.000	8.009	.750	41
*416214	S	5.750	6.874	6.882	.625	41
*416215	S	5.750	7.125	7.133	.625	41
*416219	S	6.000	7.125	7.133	.625	41
*416219H	H	6.000	7.125	7.133	.625	41
*416219N	N	6.000	7.125	7.133	.625	41
416229	**S**	**6.500**	**8.000**	**8.009**	**.625**	**41**
*416229N	N	6.500	8.000	8.009	.625	41
*416232	S	6.000	8.500	8.509	.625	41
416239	**S**	**7.000**	**8.500**	**8.509**	**.625**	**41**
416257	S	9.250	11.000	11.008	.750	41
*416257H	H	9.250	11.000	11.008	.750	41
416267	**S**	**2.125**	**3.500**	**3.505**	**.375**	**41**
416268	**S**	**2.187**	**3.500**	**3.505**	**.375**	**41**
*416269	S	2.187	3.543	3.548	.500	41
416270	**S**	**2.250**	**3.543**	**3.548**	**.500**	**41**
416271	**S**	**2.375**	**3.500**	**3.505**	**.375**	**41**
416271A	A	2.375	3.500	3.505	.375	41
*416271N	N	2.375	3.500	3.505	.375	41
416273	**S**	**2.500**	**3.623**	**3.628**	**.375**	**41**
416273V	V	2.500	3.623	3.628	.375	41
*416275	S	2.875	3.623	3.628	.468	41
*416275N	N	2.875	3.623	3.628	.468	41
416278	**S**	**2.625**	**4.249**	**4.254**	**.468**	**41**
416282	**S**	**2.750**	**4.249**	**4.254**	**.468**	**41**
*416283	S	2.750	4.249	4.254	.500	41
416285	**S**	**2.875**	**4.249**	**4.254**	**.500**	**41**
*416286	S	2.875	4.249	4.254	.625	41
*416287	S	3.125	4.249	4.254	.468	41
*416287H	H	3.125	4.249	4.254	.468	41
*416287N	N	3.125	4.249	4.254	.468	41
*416287V	V	3.125	4.249	4.254	.468	41
416288	**S**	**3.125**	**4.249**	**4.254**	**.500**	**41**
*416289	S	3.125	4.376	4.381	.562	41
*416289N	N	3.125	4.376	4.381	.562	41
*416290	S	3.250	4.376	4.381	.562	41
416292	**S**	**3.312**	**4.249**	**4.254**	**.500**	**41**
416294	**S**	**3.375**	**4.249**	**4.254**	**.500**	**41**
*416294H	H	3.375	4.249	4.254	.500	41
*416294N	N	3.375	4.249	4.254	.500	41
416294V	V	3.375	4.249	4.254	.500	41
416297	**S**	**3.125**	**4.626**	**4.631**	**.437**	**41**
*416304	S	3.250	4.626	4.631	.625	41
*416309	S	3.250	4.999	5.004	.500	41
416313	**S**	**3.312**	**4.751**	**4.756**	**.500**	**41**
416321	S	3.375	4.751	4.756	.500	41
*416323	S	3.375	4.751	4.756	.625	41
416327	S	3.375	5.251	5.256	.468	41
*416331N	N	3.500	4.999	5.004	.500	41
416332	**S**	**3.625**	**4.625**	**4.631**	**.437**	**41**
*416333	S	3.625	4.751	4.756	.484	41
*416335	S	3.625	5.251	5.256	.468	41
*416335N	N	3.625	5.251	5.256	.468	41
*416335V	V	3.625	5.251	5.256	.468	41
416339	**S**	**3.750**	**4.999**	**5.004**	**.500**	**41**
*416339N	N	3.750	4.999	5.004	.500	41

For Illustration and Material Data See Technical Section

* The U.S. customer service number is 877-4-TIMKEN. The Canadian customer service numbers are 800-565-4927 (English) and 800-565-0438 (French-Canadian).

410000 SERIES (cont.)

Part No.	Lip Mat'l	Shaft Size	Hsg. Bore	Seal O.D.	Seal Width	Type/ Illus.
*416342	S	3.875	4.626	4.631	.625	41
*416342N	N	3.875	4.626	4.631	.625	41
416345	**S**	**3.875**	**4.999**	**5.004**	**.500**	**41**
*416345H	H	3.875	4.999	5.004	.500	41
*416350	S	3.937	4.999	5.004	.500	41
416362	S	6.750	8.007	8.017	.625	41
*416362N	N	6.750	8.007	8.017	.625	41
*416362V	V	6.750	8.007	8.017	.625	41
416364	**S**	**7.000**	**8.000**	**8.009**	**.625**	**41**
*416364N	N	7.000	8.000	8.009	.625	41
*416364V	V	7.000	8.000	8.009	.625	41
*416365	S	3.437	4.501	4.506	.468	41
416370	**S**	**3.000**	**4.751**	**4.756**	**.625**	**41**
416380	**S**	**4.375**	**5.500**	**5.506**	**.500**	**41**
416381	**S**	**9.625**	**12.750**	**12.758**	**1.250**	**41**
*416381V	V	9.620	12.750	12.758	1.250	41
416383	**S**	**10.750**	**13.374**	**13.381**	**1.250**	**41**
*416389	S	3.625	5.501	5.506	.562	41
416394	**S**	**8.500**	**10.625**	**10.633**	**.750**	**41**
*416395	S	7.250	9.125	9.133	.750	41
*416403	S	7.995	10.000	10.010	.750	41
416404	**S**	**3.125**	**4.003**	**4.008**	**.375**	**41**
*416404V	V	3.125	4.003	4.008	.375	41
*416414	S	3.500	4.500	4.506	.500	41
416422	S	8.250	11.500	11.507	.750	41
*416422N	N	8.250	11.500	11.507	.750	41
*416426H	H	2.875	4.331	4.336	.500	41
*416426N	N	2.875	4.331	4.336	.500	41
416444	**S**	**2.312**	**3.500**	**3.505**	**.375**	**41**
416470N	N	3.250	4.249	4.254	.375	41
416476	**S**	**5.875**	**7.125**	**7.133**	**.500**	**41**
*416482	S	7.625	8.623	8.630	.715	41
416500	**S**	**2.937**	**3.937**	**3.942**	**.500**	**41**
*416500N	N	2.937	3.937	3.942	.500	41
416556	S	4.250	5.250	5.256	.500	41
416557	**S**	**5.125**	**6.125**	**6.131**	**.500**	**41**
*416592	S	6.500	9.252	9.260	.750	41
*416621	S	4.875	6.000	6.006	.562	41
*416621N	N	4.875	6.000	6.006	.562	41
416624	**S**	**3.500**	**4.376**	**4.381**	**.500**	**41**
416624N	N	3.500	4.376	4.381	.500	41
*416624V	V	3.500	4.376	4.381	.500	41
416654	**S**	**2.937**	**4.003**	**4.008**	**.375**	**41**
416657	**S**	**8.875**	**10.122**	**10.130**	**.750**	**41**
416664	**S**	**2.750**	**3.500**	**3.505**	**.375**	**41**
416664V	V	2.750	3.500	3.505	.375	41
416666	**S**	**5.750**	**7.001**	**7.008**	**.562**	**41**
*416666V	V	5.750	7.001	7.008	.562	41
416670	S	3.687	5.250	5.256	.468	41
*416670N	N	3.687	5.250	5.256	.468	41
*416673	S	4.187	6.000	6.007	.625	41
*416673N	N	4.187	6.000	6.007	.625	41
*416674	S	7.000	8.375	8.382	.750	41
*416674N	N	7.000	8.375	8.382	.750	41
416674V	V	7.000	8.375	8.382	.750	41
416706	**S**	**2.750**	**4.003**	**4.008**	**.375**	**41**
*416706H	H	2.750	4.003	4.008	.375	41
416738	**S**	**2.062**	**3.190**	**3.194**	**.437**	**41**
*416738H	H	2.062	3.190	3.194	.437	41
416775	S	2.937	4.250	4.254	.468	41
*416795N	N	2.375	4.330	4.335	.500	41
*416798	S	9.250	11.500	11.508	.750	41
*416801H	H	5.000	6.003	6.009	.500	41
416865	**S**	**5.000**	**6.250**	**6.256**	**.500**	**41**
416865V	V	5.000	6.250	6.256	.500	41
*416865N	N	5.000	6.251	6.256	.500	41
*416866	S	4.750	6.250	6.256	.500	41
416888	**S**	**4.500**	**5.500**	**5.506**	**.500**	**41**

410000 SERIES (cont.)

Part No.	Lip Mat'l	Shaft Size	Hsg. Bore	Seal O.D.	Seal Width	Type/ Illus.
416888V	V	4.500	5.500	5.507	.500	41
416891	**S**	**4.250**	**5.500**	**5.506**	**.500**	**41**
416892	**S**	**4.500**	**5.750**	**5.756**	**.500**	**41**
416919	S	3.687	4.501	4.506	.500	41
416919N	**N**	**3.687**	**4.501**	**4.506**	**.500**	**41**
416921	**S**	**2.875**	**4.003**	**4.008**	**.375**	**41**
416951	**S**	**8.250**	**10.625**	**10.633**	**.750**	**41**
416956	**S**	**2.937**	**3.751**	**3.756**	**.375**	**41**
*416961	S	2.750	4.331	4.336	.500	41
*416961N	N	2.750	4.331	4.336	.500	41
*416977	S	5.125	6.877	6.884	.625	41
417016	S	7.875	10.000	10.008	.625	41
*417017	S	6.125	7.750	7.756	.750	41
*417018	S	9.375	12.750	12.758	1.250	41
417020	**S**	**10.000**	**12.000**	**12.008**	**.625**	**41**
417022	**S**	**8.375**	**10.375**	**10.385**	**.625**	**41**
417040	**S**	**5.625**	**7.125**	**7.131**	**.500**	**41**
*417053N	N	6.125	7.875	7.881	.750	41
417073	**S**	**2.437**	**3.543**	**3.548**	**.375**	**41**
417079	**S**	**2.625**	**3.543**	**3.548**	**.375**	**41**
417082	**S**	**2.625**	**4.003**	**4.008**	**.375**	**41**
*417114	S	7.875	10.000	10.008	.750	41
417115	**S**	**7.750**	**10.000**	**10.008**	**.750**	**41**
*417116	S	10.500	13.375	13.383	1.250	41
*417123	S	4.000	6.312	6.318	.500	41
417134	**S**	**2.875**	**4.125**	**4.130**	**.375**	**41**
417158	**S**	**2.875**	**3.876**	**3.881**	**.375**	**41**
417159	**S**	**2.937**	**3.876**	**3.881**	**.375**	**41**
417159V	V	2.937	3.876	3.881	.375	41
417171	**S**	**3.125**	**4.375**	**4.381**	**.500**	**41**
417172	**S**	**3.125**	**4.500**	**4.506**	**.500**	**41**
417181	**S**	**3.250**	**4.376**	**4.381**	**.500**	**41**
417191	**S**	**3.375**	**4.500**	**4.506**	**.500**	**41**
*417191V	V	3.375	4.500	4.506	.500	41
417196	**S**	**3.500**	**4.625**	**4.631**	**.500**	**41**
*417196V	V	3.500	4.625	4.631	.500	41
417198	**S**	**3.500**	**4.875**	**4.881**	**.500**	**41**
417205	**S**	**3.750**	**4.875**	**4.881**	**.500**	**41**
417210	**S**	**3.875**	**4.751**	**4.756**	**.375**	**41**
417211	**S**	**3.875**	**4.875**	**4.881**	**.500**	**41**
417223	**S**	**4.000**	**6.250**	**6.256**	**.500**	**41**
417238	**S**	**4.312**	**6.250**	**6.256**	**.500**	**41**
*417246	S	4.625	6.250	6.256	.500	41
417247	**S**	**4.750**	**6.001**	**6.007**	**.500**	**41**
417252	**S**	**4.750**	**6.125**	**6.131**	**.500**	**41**
417254	**S**	**5.500**	**6.500**	**6.507**	**.562**	**41**
*417254N	N	5.500	6.500	6.507	.562	41
417255	S	7.000	8.375	8.382	.625	41
417258	**S**	**5.125**	**6.250**	**6.256**	**.500**	**41**
417262	**S**	**5.250**	**6.250**	**6.256**	**.500**	**41**
417262V	V	5.250	6.250	6.256	.500	41
417267	S	4.875	6.125	6.131	.500	41
417269	**S**	**4.875**	**6.250**	**6.256**	**.500**	**41**
417273	**S**	**4.937**	**6.250**	**6.256**	**.500**	**41**
417278	**S**	**5.000**	**6.375**	**6.381**	**.500**	**41**
417283	S	7.500	9.243	9.250	.625	41
*417283N	N	7.500	9.243	9.250	.625	41
417295	S	4.437	5.500	5.506	.500	41
417298	**S**	**6.625**	**8.125**	**8.134**	**.625**	**41**
417316	**S**	**2.750**	**3.751**	**3.756**	**.375**	**41**
417316V	V	2.750	3.751	3.756	.375	41
*417316N	N	2.750	3.751	3.756	.375	41
417343	**S**	**2.625**	**3.751**	**3.756**	**.375**	**41**
417344	**S**	**2.875**	**3.751**	**3.756**	**.375**	**41**
417349	**S**	**3.000**	**3.751**	**3.756**	**.437**	**41**
417349V	V	3.000	3.751	3.756	.437	41
417350	**S**	**3.000**	**3.876**	**3.881**	**.437**	**41**
417351	**S**	**3.000**	**4.125**	**4.130**	**.437**	**41**

For Illustration and Material Data See Technical Section

* The U.S. customer service number is 877-4-TIMKEN. The Canadian customer service numbers are 800-565-4927 (English) and 800-565-0438 (French-Canadian).

410000 SERIES (cont.)

Part No.	Lip Mat'l	Shaft Size	Hsg. Bore	Seal O.D.	Seal Width	Type/ Illus.
417352	S	3.250	4.500	4.506	.500	41
417353	**S**	**3.250**	**4.626**	**4.632**	**.500**	**41**
417354	**S**	**3.375**	**4.626**	**4.632**	**.500**	**41**
417355	**S**	**3.625**	**4.875**	**4.881**	**.500**	**41**
417356	**S**	**4.000**	**5.125**	**5.131**	**.500**	**41**
417357	**S**	**4.000**	**5.250**	**5.256**	**.500**	**41**
417358	**S**	**5.250**	**6.375**	**6.381**	**.500**	**41**
417359	S	5.250	6.625	6.632	.562	41
417360	**S**	**5.500**	**6.625**	**6.632**	**.562**	**41**
417361	**S**	**5.500**	**6.875**	**6.882**	**.562**	**41**
417362	**S**	**5.750**	**6.750**	**6.757**	**.575**	**41**
*417362N	N	5.750	6.750	6.757	.575	41
*417362V	V	5.750	6.750	6.757	.575	41
417363	S	5.750	6.875	6.882	.562	41
417364	S	5.750	7.125	7.132	.562	41
417365	**S**	**6.000**	**7.125**	**7.132**	**.562**	**41**
417366	**S**	**3.875**	**5.250**	**5.256**	**.500**	**41**
*417374	S	9.500	11.500	11.510	.750	41
417385	S	7.500	10.500	10.510	.750	41
*417385V	V	7.500	10.500	10.510	.750	41
*417401	S	3.992	5.875	5.881	.625	41
*417419	S	5.500	8.500	8.507	.625	41
417433	**S**	**3.250**	**4.003**	**4.008**	**.375**	**41**
*417452	S	4.250	6.750	6.757	.625	41
417474	**S**	**1.937**	**3.543**	**3.548**	**.375**	**41**
417480	**S**	**2.375**	**3.876**	**3.881**	**.375**	**41**
*417480N	N	2.375	3.876	3.881	.375	41
417481	**S**	**2.562**	**3.750**	**3.756**	**.375**	**41**
*417483	S	2.625	3.876	3.881	.437	41
417484	S	2.750	3.543	3.548	.375	41
417484N	**N**	**2.750**	**3.543**	**3.548**	**.375**	**41**
417485	**S**	**2.812**	**3.876**	**3.881**	**.437**	**41**
417486	**S**	**2.937**	**4.125**	**4.130**	**.375**	**41**
417487	**S**	**3.000**	**4.249**	**4.254**	**.437**	**41**
417488	**S**	**3.000**	**4.376**	**4.381**	**.500**	**41**
417490	S	3.187	4.376	4.381	.500	41
417491	**S**	**3.312**	**4.376**	**4.381**	**.500**	**41**
417492	**S**	**3.437**	**4.501**	**4.506**	**.375**	**41**
417492V	V	3.437	4.501	4.506	.375	41
417493	**S**	**3.437**	**4.626**	**4.631**	**.500**	**41**
*417493V	V	3.437	4.626	4.631	.500	41
417494	S	3.437	4.876	4.881	.500	41
417495	**S**	**3.500**	**5.126**	**5.131**	**.500**	**41**
417496	**S**	**3.500**	**5.500**	**5.505**	**.500**	**41**
417497	S	3.562	4.751	4.756	.500	41
417498	S	3.562	4.876	4.881	.500	41
417499	**S**	**3.625**	**5.251**	**5.256**	**.437**	**41**
417500	S	3.625	5.501	5.506	.500	41
417501	**S**	**3.687**	**4.750**	**4.756**	**.500**	**41**
417502	S	3.687	5.501	5.506	.500	41
417503	S	3.750	5.501	5.506	.500	41
417504	**S**	**3.812**	**4.876**	**4.881**	**.500**	**41**
417505	**S**	**3.875**	**5.501**	**5.506**	**.500**	**41**
417506	**S**	**3.937**	**5.501**	**5.506**	**.500**	**41**
417507	**S**	**4.000**	**5.626**	**5.632**	**.375**	**41**
417509	**S**	**4.000**	**5.999**	**6.005**	**.500**	**41**
417511	**S**	**4.125**	**5.126**	**5.132**	**.500**	**41**
417512	**S**	**4.125**	**5.501**	**5.506**	**.500**	**41**
417513	S	4.187	5.501	5.506	.500	41
417514	**S**	**4.187**	**5.751**	**5.756**	**.500**	**41**
417515	S	4.187	6.000	6.007	.500	41
417516	S	4.187	6.250	6.256	.500	41
*417516V	V	4.187	6.250	6.256	.500	41
417518	**S**	**4.250**	**6.126**	**6.133**	**.500**	**41**
417520	**S**	**4.312**	**5.751**	**5.756**	**.500**	**41**
417522	S	4.375	6.125	6.131	.500	41
*417522V	V	4.375	6.125	6.131	.500	41
417525	**S**	**4.437**	**5.751**	**5.756**	**.500**	**41**

410000 SERIES (cont.)

Part No.	Lip Mat'l	Shaft Size	Hsg. Bore	Seal O.D.	Seal Width	Type/ Illus.
417526	S	4.437	5.999	6.007	.500	41
417530	**S**	**4.500**	**5.376**	**5.381**	**.437**	**41**
417531	S	4.500	5.876	5.881	.500	41
417532	**S**	**4.500**	**6.374**	**6.382**	**.500**	**41**
417533	**S**	**4.562**	**5.751**	**5.756**	**.500**	**41**
417534	S	4.562	5.999	6.007	.500	41
417535	S	4.687	5.999	6.007	.500	41
417536	S	4.687	6.250	6.256	.500	41
417537	S	4.687	6.374	6.382	.500	41
417538	**S**	**4.750**	**5.876**	**5.881**	**.500**	**41**
*417538V	V	4.750	5.876	5.881	.500	41
417539	**S**	**4.937**	**5.999**	**6.007**	**.500**	**41**
417540	S	4.937	6.374	6.382	.500	41
417541	**S**	**5.000**	**6.499**	**6.507**	**.500**	**41**
417542	**S**	**5.000**	**6.749**	**6.757**	**.500**	**41**
417543	S	5.000	6.874	6.882	.500	41
*417543V	V	5.000	6.874	6.882	.500	41
417544	**S**	**5.000**	**7.000**	**7.007**	**.500**	**41**
417545	**S**	**5.000**	**7.500**	**7.507**	**.500**	**41**
417546	**S**	**5.125**	**6.374**	**6.382**	**.500**	**41**
417547	S	5.125	6.499	6.507	.500	41
417548	S	5.187	6.499	6.507	.500	41
417549	**S**	**5.250**	**6.750**	**6.757**	**.500**	**41**
417550	**S**	**5.312**	**6.500**	**6.507**	**.500**	**41**
417551	**S**	**5.375**	**6.374**	**6.380**	**.500**	**41**
417554	**S**	**5.375**	**6.749**	**6.757**	**.500**	**41**
417555	**S**	**5.625**	**6.624**	**6.631**	**.500**	**41**
417556	**S**	**5.625**	**6.874**	**6.882**	**.500**	**41**
*417556V	V	5.625	6.874	6.882	.500	41
417562	**S**	**6.250**	**7.750**	**7.758**	**.500**	**41**
417563	**S**	**6.375**	**7.875**	**7.883**	**.500**	**41**
417564	S	7.000	8.750	8.759	.625	41
417567	**S**	**8.625**	**10.625**	**10.635**	**.750**	**41**
417570	**S**	**10.250**	**12.250**	**12.260**	**.750**	**41**
417571	**S**	**11.000**	**12.500**	**12.510**	**.625**	**41**
417584	S	5.000	6.126	6.131	.562	41
417596	**S**	**6.750**	**8.250**	**8.257**	**.562**	**41**
417597	**S**	**7.000**	**8.250**	**8.257**	**.625**	**41**
417598	**S**	**7.625**	**9.125**	**9.133**	**.625**	**41**
417598V	V	7.625	9.125	9.133	.625	41
417600	**S**	**8.000**	**9.250**	**9.258**	**.625**	**41**
417601	**S**	**8.000**	**9.500**	**9.508**	**.625**	**41**
417602	**S**	**8.000**	**10.000**	**10.008**	**.625**	**41**
*417602N	N	8.000	10.000	10.008	.625	41
417603	**S**	**8.500**	**10.000**	**10.008**	**.625**	**41**
417604	**S**	**8.500**	**10.500**	**10.508**	**.625**	**41**
417605	**S**	**10.000**	**11.000**	**11.008**	**.625**	**41**
417606	**S**	**9.500**	**11.500**	**11.508**	**.625**	**41**
*417606V	V	9.500	11.500	11.508	.625	41
*417607	S	10.500	13.375	13.383	.750	41
417608	**S**	**12.000**	**14.000**	**14.010**	**.750**	**41**
417621	**S**	**3.125**	**4.125**	**4.130**	**.375**	**41**
*417641	S	10.625	12.500	12.508	.625	41
*417650	S	3.625	6.000	6.006	.500	41
*417657	S	7.875	9.250	9.258	1.000	41
417698	**S**	**3.625**	**4.376**	**4.381**	**.375**	**41**
*417730	S	2.937	4.003	4.008	.625	41
*417756	S	10.500	12.500	12.508	.625	41
417780	S	5.937	7.502	7.508	.562	41
417817	S	7.937	8.750	8.757	.565	41
*417904N	N	7.500	9.750	9.758	.625	41
417921	S	6.187	7.250	7.258	.734	41
417939	S	9.910	10.995	11.005	.625	41
417940	S	9.000	10.088	10.095	.625	41
*417942V	V	5.625	6.750	6.757	.500	41
417967★	**S**	***100,00***	***123,85***	***123,98***	***12,70***	**41**
		3.937	**4.876**	**4.881**	**.500**	
417986N	N	2.750	5.500	5.506	.500	41

For Illustration and Material Data See Technical Section

* The U.S. customer service number is 877-4-TIMKEN. The Canadian customer service numbers are 800-565-4927 (English) and 800-565-0438 (French-Canadian). ★ Metric Seal

410000 SERIES (cont.)

Part No.	Lip Mat'l	Shaft Size	Hsg. Bore	Seal O.D.	Seal Width	Type/ Illus.
417987N	N	3.250	5.500	5.506	.500	41
418027	**S**	**2.625**	**4.437**	**4.441**	**.437**	**41**
418028	**S**	**3.250**	**4.500**	**4.506**	**.375**	**41**
418029	**S**	**3.437**	**4.249**	**4.254**	**.375**	**41**
***418029V**	**V**	**3.437**	**4.249**	**4.254**	**.375**	**41**
*418038	S	4.187	4.999	5.004	.375	41

440000 SERIES

Part No.	Lip Mat'l	Shaft Size	Hsg. Bore	Seal O.D.	Seal Width	Type/ Illus.
440131	S	.875	1.375	1.379	.187	44
440265	S	1.687	2.623	2.627	.375	44
440511	S	2.625	3.371	3.376	.250	44
*440905	S	2.000	2.625	2.629	.250	44
440972	S	2.125	3.371	3.376	.312	44
441130	S	1.000	1.375	1.379	.187	44
*441130N	N	1.000	1.375	1.379	.187	44
441148	S	2.000	3.264	3.269	.250	44
*441267	S	.875	1.375	1.379	.250	44
441319	S	1.218	1.979	1.983	.250	44
441853	S	1.875	2.561	2.565	.500	44
442109	S	2.250	3.371	3.376	.375	44
*442110	S	2.500	3.251	3.256	.250	44
*442168	S	.875	1.187	1.191	.185	44
442251	S	1.718	2.561	2.565	.500	44
442251V	V	1.718	2.561	2.565	.500	44
*442270	S	2.250	3.371	3.376	.500	44
442380	S	2.500	3.251	3.256	.312	44
442507	S	2.375	3.350	3.355	.250	44
442874	S	2.312	3.000	3.005	.250	44
443018	S	1.500	1.983	1.988	.187	44
*443389	S	1.750	2.624	2.628	.250	44
*443527	S	1.500	1.875	1.879	.187	44
444042	S	2.500	3.500	3.505	.250	44
444116	S	1.812	2.327	2.332	.437	44
*444118★	S	*45,00*	*72,20*	*72,34*	*7,50*	44
		1.772	2.843	2.848	.295	
444258	S	.375	.836	.841	.187	44
*446631	S	2.500	3.876	3.881	.375	44
446927	S	3.500	4.125	4.130	.250	44
447060	S	5.250	6.250	6.256	.250	44
*447060V	V	5.250	6.250	6.256	.250	44
*447441	S	2.667	3.751	3.756	.500	44
*447582	S	6.000	7.127	7.133	.500	44
*447583	S	4.125	5.251	5.256	.375	44
*447717	S	4.562	5.512	5.517	.250	44
*447722	S	4.562	5.312	5.317	.250	44
447793	S	6.000	6.751	6.757	.375	44
*447975	S	6.000	7.238	7.244	.472	44

450000 SERIES

Part No.	Lip Mat'l	Shaft Size	Hsg. Bore	Seal O.D.	Seal Width	Type/ Illus.
450005	S	.500	1.124	1.128	.375	45
*450006	S	.531	1.124	1.128	.375	45
*450007	S	.562	1.124	1.128	.375	45
*450007H	H	.562	1.124	1.128	.375	45
*450008	S	.593	1.124	1.128	.375	45
*450009	S	.625	1.124	1.128	.375	45
*450009V	V	.625	1.124	1.128	.375	45
*450014	S	.500	1.250	1.254	.375	45
*450016	S	.562	1.250	1.254	.375	45
*450016H	H	.562	1.250	1.254	.375	45
*450017	S	.593	1.250	1.254	.375	45
*450017V	V	.593	1.250	1.254	.375	45
*450018	S	.625	1.250	1.254	.375	45
*450019	S	.500	1.375	1.379	.406	45
*450021	S	.562	1.375	1.379	.406	45
*450022	S	.593	1.375	1.379	.406	45
*450023	S	.625	1.375	1.379	.406	45
*450023H	H	.625	1.375	1.379	.406	45
*450024	S	.656	1.375	1.379	.406	45
450025	S	.687	1.375	1.379	.406	45

450000 SERIES (cont.)

Part No.	Lip Mat'l	Shaft Size	Hsg. Bore	Seal O.D.	Seal Width	Type/ Illus.
*450027	S	.750	1.375	1.379	.406	45
*450027H	H	.750	1.375	1.379	.406	45
*450027N	N	.750	1.375	1.379	.406	45
*450028	S	.750	1.499	1.503	.390	45
*450029	S	.781	1.499	1.503	.390	45
450030	S	.812	1.499	1.503	.390	45
*450030N	N	.812	1.499	1.503	.390	45
*450032	S	.875	1.499	1.503	.390	45
*450032N	N	.875	1.499	1.503	.390	45
*450033	S	.750	1.828	1.832	.437	45
*450034	S	.781	1.828	1.832	.437	45
*450035	S	.812	1.828	1.832	.437	45
*450037	S	.875	1.828	1.832	.437	45
*450037N	N	.875	1.828	1.832	.437	45
450038	S	.906	1.828	1.832	.437	45
450039	**S**	**.937**	**1.828**	**1.832**	**.437**	**45**
450040	**S**	**.968**	**1.828**	**1.832**	**.437**	**45**
*450041	S	1.000	1.828	1.832	.437	45
*450041N	N	1.000	1.828	1.832	.437	45
450043	S	1.062	1.828	1.832	.437	45
450044	S	1.093	1.828	1.832	.437	45
*450045	S	1.125	1.828	1.832	.437	45
*450045H	H	1.125	1.828	1.832	.437	45
*450045N	N	1.125	1.828	1.832	.437	45
*450045V	V	1.125	1.828	1.832	.437	45
*450046	S	1.156	1.983	1.987	.437	45
*450047	S	1.187	1.983	1.987	.437	45
450048	**S**	**1.218**	**1.983**	**1.987**	**.437**	**45**
*450049	S	1.250	1.983	1.987	.437	45
*450049N	N	1.250	1.983	1.987	.437	45
*450050	S	1.281	1.983	1.987	.437	45
*450051	S	1.156	2.062	2.066	.437	45
*450051V	V	1.156	2.062	2.066	.437	45
*450052	S	1.187	2.062	2.066	.437	45
*450053	S	1.312	2.374	2.378	.500	45
450054	S	1.343	2.374	2.378	.500	45
*450055	S	1.375	2.374	2.378	.500	45
*450055N	N	1.375	2.374	2.378	.500	45
*450055V	V	1.375	2.374	2.378	.500	45
*450057	S	1.437	2.374	2.378	.500	45
*450057V	V	1.437	2.374	2.378	.500	45
*450058	S	1.468	2.374	2.378	.500	45
*450059	S	1.500	2.374	2.378	.500	45
*450059H	H	1.500	2.374	2.378	.500	45
*450059N	N	1.500	2.374	2.378	.500	45
*450059V	V	1.500	2.374	2.378	.500	45
*450061	S	1.375	2.437	2.441	.468	45
*450062	S	1.437	2.437	2.441	.468	45
*450063	S	1.500	2.437	2.441	.468	45
*450063H	H	1.500	2.437	2.441	.468	45
*450064	S	1.562	2.437	2.441	.468	45
*450064N	N	1.562	2.437	2.441	.468	45
450065	**S**	**1.593**	**2.437**	**2.441**	**.468**	**45**
450066	S	1.625	2.437	2.441	.468	45
*450066N	N	1.625	2.437	2.441	.468	45
450067	S	1.500	2.502	2.506	.500	45
*450067N	N	1.500	2.502	2.506	.500	45
450068	**S**	**1.718**	**2.623**	**2.627**	**.500**	**45**
450069	S	1.625	2.623	2.627	.500	45
*450069N	N	1.625	2.623	2.627	.500	45
*450069V	V	1.625	2.623	2.627	.500	45
450070	S	1.750	2.623	2.627	.500	45
*450070H	H	1.750	2.623	2.627	.500	45
*450070N	N	1.750	2.623	2.627	.500	45
*450070V	V	1.750	2.623	2.627	.500	45
*450071	S	1.875	2.623	2.627	.500	45
*450071H	H	1.875	2.623	2.627	.500	45
*450071N	N	1.875	2.623	2.627	.500	45

For Illustration and Material Data See Technical Section

* The U.S. customer service number is 877-4-TIMKEN. The Canadian customer service numbers are 800-565-4927 (English) and 800-565-0438 (French-Canadian). ★ Metric Seal

450000 SERIES (cont.)

Part No.	Lip Mat'l	Shaft Size	Hsg. Bore	Seal O.D.	Seal Width	Type/ Illus.
*450071V	V	1.875	2.623	2.627	.500	45
*450072	S	1.625	2.686	2.690	.500	45
450073	S	1.656	2.686	2.690	.500	45
*450074	S	1.687	2.686	2.690	.500	45
450076	S	1.750	2.686	2.690	.500	45
*450076N	N	1.750	2.686	2.690	.500	45
*450076V	V	1.750	2.686	2.690	.500	45
*450077	S	1.500	2.758	2.762	.500	45
*450077N	N	1.500	2.758	2.762	.500	45
450078	S	1.625	2.875	2.879	.468	45
*450079	S	1.656	2.875	2.879	.468	45
*450080	S	1.687	2.875	2.879	.468	45
450082	S	1.875	2.875	2.879	.468	45
*450082N	N	1.875	2.875	2.879	.468	45
450083	S	2.000	2.875	2.879	.468	45
450084	**S**	**1.875**	**2.996**	**3.001**	**.500**	**45**
450085	S	2.000	2.996	3.001	.500	45
*450085N	N	2.000	2.996	3.001	.500	45
*450085V	V	2.000	2.996	3.001	.500	45
*450086	S	1.687	3.062	3.066	.500	45
450087	S	1.750	3.061	3.066	.500	45
*450088	S	1.750	3.189	3.194	.437	45
450089	S	1.781	3.189	3.194	.437	45
450090	**S**	**1.812**	**3.189**	**3.194**	**.437**	**45**
*450092	S	1.875	3.189	3.194	.437	45
450094	S	1.937	3.189	3.194	.437	45
450094N	N	1.937	3.189	3.194	.437	45
450095	S	2.000	3.189	3.194	.437	45
*450095N	N	2.000	3.189	3.194	.437	45
450096	S	2.062	3.189	3.194	.437	45
*450096H	H	2.062	3.189	3.194	.437	45
*450097	S	2.125	3.350	3.355	.468	45
*450098	S	2.187	3.350	3.355	.468	45
450099	S	2.250	3.350	3.355	.468	45
*450100	S	2.312	3.350	3.355	.468	45
450101	S	2.375	3.350	3.355	.468	45
*450101H	H	2.375	3.350	3.355	.468	45
*450101N	N	2.375	3.350	3.355	.468	45
*450102	S	2.000	3.371	3.376	.468	45
*450102H	H	2.000	3.371	3.376	.468	45
450103	S	2.375	3.481	3.486	.500	45
450104	S	2.437	3.481	3.486	.500	45
*450109	S	1.562	2.750	2.754	.500	45
450111	S	1.968	3.350	3.355	.468	45
450115	S	2.125	2.996	3.001	.500	45
*450115N	N	2.125	2.996	3.001	.500	45
450116	S	1.812	2.875	2.879	.468	45
450117	S	1.875	2.750	2.754	.500	45
450118	S	1.812	2.750	2.754	.500	45
*450119	S	.500	.999	1.003	.375	45
*450120	S	1.000	1.499	1.503	.390	45
*450120H	H	1.000	1.499	1.503	.390	45
450121	S	2.125	3.189	3.194	.437	45
*450121N	N	2.125	3.189	3.194	.437	45
*450121V	V	2.125	3.189	3.194	.437	45
*450122	S	1.437	2.623	2.627	.500	45
*450124	S	1.281	2.062	2.066	.437	45
*450127	S	1.062	1.874	1.878	.437	45
*450127H	H	1.062	1.874	1.878	.437	45
450132	S	2.250	3.371	3.376	.468	45
450133	**S**	**2.312**	**3.371**	**3.376**	**.468**	**45**
*450135	S	1.375	2.125	2.129	.437	45
*450136	S	1.500	2.250	2.254	.500	45
*450136N	N	1.500	2.250	2.254	.500	45
*450137	S	.687	1.124	1.128	.375	45
*450138	S	1.937	2.686	2.690	.500	45
*450139	S	2.187	2.996	3.001	.500	45
*450140	S	1.250	1.752	1.756	.437	45

450000 SERIES (cont.)

Part No.	Lip Mat'l	Shaft Size	Hsg. Bore	Seal O.D.	Seal Width	Type/ Illus.
*450140N	N	1.250	1.752	1.756	.437	45
*450141	S	.750	1.250	1.254	.375	45
*450141V	V	.750	1.250	1.254	.375	45
450143	**S**	**1.562**	**2.561**	**2.565**	**.500**	**45**
*450144	S	1.437	2.502	2.506	.500	45
*450145	S	1.937	2.996	3.001	.500	45
450147	S	1.312	2.996	3.001	.500	45
*450152	S	1.187	2.125	2.129	.437	45
*450153	S	1.375	2.106	2.110	.468	45
*450153N	N	1.375	2.106	2.110	.468	45
450154	S	1.687	2.502	2.506	.500	45
*450155	S	1.750	2.758	2.762	.500	45
*450157	S	1.000	2.000	2.004	.437	45
*450158	S	1.062	2.000	2.004	.437	45
450159	S	1.093	2.000	2.004	.437	45
*450160	S	1.125	2.000	2.004	.437	45
450161	S	1.156	2.000	2.004	.437	45
*450161H	H	1.156	2.000	2.004	.437	45
*450161V	V	1.156	2.000	2.004	.437	45
*450162	S	1.187	2.000	2.004	.437	45
*450162N	N	1.187	2.000	2.004	.437	45
*450163	S	1.250	2.000	2.004	.437	45
*450163N	N	1.250	2.000	2.004	.437	45
*450164	S	1.281	2.000	2.004	.437	45
*450165	S	1.250	2.250	2.254	.500	45
*450165H	H	1.250	2.250	2.254	.500	45
*450167	S	1.312	2.250	2.254	.500	45
*450169	S	1.375	2.250	2.254	.500	45
*450169N	N	1.375	2.250	2.254	.500	45
*450169V	V	1.375	2.250	2.254	.500	45
450173	**S**	**1.218**	**2.000**	**2.004**	**.437**	**45**
450177	S	1.250	2.106	2.110	.468	45
*450179	S	1.312	2.106	2.110	.468	45
*450180	S	1.343	2.106	2.110	.468	45
*450182	S	1.125	1.983	1.987	.437	45
450183	S	1.750	2.750	2.754	.500	45
*450183N	N	1.750	2.750	2.754	.500	45
*450183V	V	1.750	2.750	2.754	.500	45
*450184	S	.937	1.499	1.503	.390	45
450185	S	1.562	2.502	2.506	.500	45
450185V	V	1.562	2.502	2.506	.500	45
*450185H	H	1.562	2.502	2.506	.500	45
*450185N	N	1.562	2.502	2.506	.500	45
*450186	S	1.687	2.750	2.754	.500	45
*450187	S	1.000	2.062	2.066	.437	45
450188	**S**	**1.062**	**1.561**	**1.565**	**.375**	**45**
*450189	S	1.125	1.752	1.756	.437	45
*450189H	H	1.125	1.752	1.756	.437	45
*450190	S	1.500	2.561	2.565	.500	45
*450193	S	1.812	2.996	3.001	.500	45
450194	S	1.625	2.502	2.506	.500	45
*450194H	H	1.625	2.502	2.506	.500	45
*450194N	N	1.625	2.502	2.506	.500	45
*450202	S	.562	.999	1.003	.375	45
*450202N	N	.562	.999	1.003	.375	45
*450203	S	.781	1.375	1.379	.406	45
*450204	S	.812	1.375	1.379	.406	45
*450204N	N	.812	1.375	1.379	.406	45
*450205	S	.687	1.499	1.503	.390	45
*450205N	N	.687	1.499	1.503	.390	45
*450208	S	.968	1.499	1.503	.390	45
*450210	S	1.062	1.499	1.503	.390	45
*450211	S	.750	1.624	1.628	.437	45
*450213	S	.812	1.624	1.628	.437	45
*450215	S	.875	1.624	1.628	.437	45
*450217	S	.937	1.624	1.628	.437	45
*450217V	V	.937	1.624	1.628	.437	45
*450218	S	.968	1.624	1.628	.437	45

For Illustration and Material Data See Technical Section

* The U.S. customer service number is 877-4-TIMKEN. The Canadian customer service numbers are 800-565-4927 (English) and 800-565-0438 (French-Canadian).

450000 SERIES (cont.)

Part No.	Lip Mat'l	Shaft Size	Hsg. Bore	Seal O.D.	Seal Width	Type/ Illus.
*450218N	N	.968	1.624	1.628	.437	45
*450219	S	1.000	1.624	1.628	.437	45
*450219H	H	1.000	1.624	1.628	.437	45
*450219N	N	1.000	1.624	1.628	.437	45
*450220	S	1.031	1.624	1.628	.437	45
*450221	S	1.062	1.624	1.628	.437	45
*450222	S	.750	1.752	1.756	.437	45
*450223	S	.781	1.752	1.756	.437	45
*450224	S	.812	1.752	1.756	.437	45
*450226	S	.875	1.752	1.756	.437	45
*450228	S	.937	1.752	1.756	.437	45
*450229	S	.968	1.752	1.756	.437	45
*450230	S	1.000	1.752	1.756	.437	45
*450230N	N	1.000	1.752	1.756	.437	45
*450232	S	1.062	1.752	1.756	.437	45
*450233	S	1.000	1.874	1.878	.437	45
*450236	S	1.125	1.874	1.878	.437	45
*450236H	H	1.125	1.874	1.878	.437	45
*450241	S	1.125	2.062	2.066	.437	45
*450244	S	1.250	2.062	2.066	.437	45
*450244N	N	1.250	2.062	2.066	.437	45
*450245	S	1.250	2.125	2.129	.437	45
*450245N	N	1.250	2.125	2.129	.437	45
*450247	S	1.312	2.125	2.129	.437	45
*450248	S	1.343	2.125	2.129	.437	45
*450255	S	1.468	2.437	2.441	.468	45
*450258	S	1.593	2.502	2.506	.500	45
450260	S	1.656	2.502	2.506	.500	45
*450261	S	2.062	2.996	3.001	.500	45
*450262	S	1.562	2.623	2.627	.500	45
*450265	S	1.687	2.623	2.627	.500	45
*450267	S	1.812	2.623	2.627	.500	45
*450267N	N	1.812	2.623	2.627	.500	45
*450268	S	1.843	2.623	2.627	.500	45
*450268N	N	1.843	2.623	2.627	.500	45
450269	S	1.781	2.686	2.690	.500	45
*450270	S	1.812	2.686	2.690	.500	45
*450272	S	1.875	2.686	2.690	.500	45
450273	**S**	**1.562**	**2.758**	**2.762**	**.500**	**45**
450274	S	1.593	2.758	2.762	.500	45
*450274H	H	1.593	2.758	2.762	.500	45
450275	S	1.625	2.758	2.762	.500	45
450279	**S**	**1.937**	**2.758**	**2.762**	**.500**	**45**
450280	S	1.781	2.758	2.762	.500	45
*450281	S	1.812	2.758	2.762	.500	45
*450283	S	1.875	2.758	2.762	.500	45
*450283H	H	1.875	2.758	2.762	.500	45
*450284	S	1.656	2.750	2.754	.500	45
450285	S	1.781	2.750	2.754	.500	45
*450286	S	1.625	2.750	2.754	.500	45
*450286N	N	1.625	2.750	2.754	.500	45
450291	S	1.750	2.875	2.879	.468	45
450291N	N	1.750	2.875	2.879	.468	45
*450291V	V	1.750	2.875	2.879	.468	45
*450293	S	1.843	2.875	2.879	.468	45
*450295	S	1.937	2.875	2.879	.468	45
450298	S	1.875	3.000	3.005	.500	45
*450300	S	1.937	3.000	3.005	.500	45
450301	S	2.000	3.000	3.005	.500	45
*450301H	H	2.000	3.000	3.005	.500	45
*450301N	N	2.000	3.000	3.005	.500	45
*450302	S	2.062	3.000	3.005	.500	45
*450302H	H	2.062	3.000	3.005	.500	45
450303	S	2.125	3.000	3.005	.500	45
*450303N	N	2.125	3.000	3.005	.500	45
*450303V	V	2.125	3.000	3.005	.500	45
*450304	S	1.875	3.061	3.066	.500	45
*450304H	H	1.875	3.061	3.066	.500	45

450000 SERIES (cont.)

Part No.	Lip Mat'l	Shaft Size	Hsg. Bore	Seal O.D.	Seal Width	Type/ Illus.
*450306	S	1.937	3.061	3.066	.500	45
450307	**S**	**2.062**	**3.061**	**3.066**	**.500**	**45**
450308	S	2.125	3.061	3.066	.500	45
*450309	S	1.937	3.125	3.130	.500	45
*450310	S	2.000	3.125	3.130	.500	45
*450310N	N	2.000	3.125	3.130	.500	45
450311	S	2.062	3.125	3.130	.500	45
450312	S	2.125	3.125	3.130	.500	45
*450312N	N	2.125	3.125	3.130	.500	45
450313	S	2.062	3.251	3.256	.500	45
*450314	S	2.125	3.251	3.256	.500	45
*450315	S	2.187	3.251	3.256	.500	45
450316	S	2.250	3.251	3.256	.500	45
*450316H	H	2.250	3.251	3.256	.500	45
*450316N	N	2.250	3.251	3.256	.500	45
450317	S	2.312	3.251	3.256	.500	45
*450317N	N	2.312	3.251	3.256	.500	45
*450320	S	2.375	3.189	3.194	.437	45
*450322	S	2.437	3.251	3.256	.500	45
*450323	S	2.500	3.189	3.194	.437	45
*450323V	V	2.500	3.189	3.194	.437	45
*450324	S	2.437	3.371	3.376	.468	45
450326	**S**	**1.500**	**2.996**	**3.001**	**.500**	**45**
450329	S	2.625	3.350	3.356	.468	45
*450329H	H	2.625	3.350	3.356	.468	45
*450330	S	2.500	3.371	3.376	.468	45
*450330H	H	2.500	3.371	3.376	.468	45
*450331	S	1.843	2.750	2.754	.500	45
*450331N	N	1.843	2.750	2.754	.500	45
450332	**S**	**1.125**	**2.437**	**2.441**	**.468**	**45**
450335	S	1.625	3.062	3.066	.500	45
*450336	S	1.187	2.250	2.254	.500	45
*450336H	H	1.187	2.250	2.254	.500	45
450339	**S**	**.968**	**2.062**	**2.066**	**.437**	**45**
*450339N	N	.968	2.062	2.066	.437	45
450340	**S**	**.750**	**1.561**	**1.565**	**.375**	**45**
450341	**S**	**1.250**	**2.713**	**2.717**	**.468**	**45**
450342	**S**	**1.062**	**1.983**	**1.987**	**.437**	**45**
*450342N	N	1.062	1.983	1.987	.437	45
450343	S	2.062	3.371	3.376	.468	45
*450344	S	1.187	1.828	1.832	.437	45
*450347	S	1.187	2.437	2.441	.468	45
450350	S	2.375	3.371	3.376	.468	45
*450350H	H	2.375	3.371	3.376	.468	45
*450350N	N	2.375	3.371	3.376	.468	45
*450351	S	1.750	2.437	2.441	.468	45
*450351N	N	1.750	2.437	2.441	.468	45
450352	S	1.750	2.502	2.506	.500	45
*450352H	H	1.750	2.502	2.506	.500	45
*450352N	N	1.750	2.502	2.506	.500	45
*450354	S	2.187	3.189	3.194	.437	45
*450355	S	.687	1.250	1.254	.375	45
*450358	S	1.625	2.374	2.378	.500	45
*450358N	N	1.625	2.374	2.378	.500	45
*450359	S	1.750	2.996	3.001	.500	45
*450360	S	2.000	2.686	2.690	.500	45
*450360H	H	2.000	2.686	2.690	.500	45
450361	S	1.750	2.561	2.565	.500	45
450362	**S**	**1.156**	**2.125**	**2.129**	**.437**	**45**
*450363	S	1.687	2.502	2.506	.375	45
*450363H	H	1.687	2.502	2.506	.375	45
450365	S	2.125	2.875	2.879	.468	45
450365N	N	2.125	2.875	2.879	.468	45
*450365V	V	2.125	2.875	2.879	.468	45
*450373	S	2.062	2.875	2.879	.468	45
*450374	S	2.437	3.350	3.355	.468	45
450375	S	1.765	2.412	2.416	.468	45
*450381	S	1.125	1.624	1.628	.437	45

For Illustration and Material Data See Technical Section

* The U.S. customer service number is 877-4-TIMKEN. The Canadian customer service numbers are 800-565-4927 (English) and 800-565-0438 (French-Canadian).

450000 SERIES (cont.)

Part No.	Lip Mat'l	Shaft Size	Hsg. Bore	Seal O.D.	Seal Width	Type/ Illus.
450389	S	2.000	2.750	2.754	.500	45
*450389H	H	2.000	2.750	2.754	.500	45
*450394	S	1.500	2.125	2.129	.437	45
*450394N	N	1.500	2.125	2.129	.437	45
*450394V	V	1.500	2.125	2.129	.437	45
*450398	S	.875	1.374	1.379	.406	45
450400	**S**	**1.750**	**2.250**	**2.254**	**.359**	**45**
*450400V	V	1.750	2.250	2.254	.359	45
*450403	S	1.375	2.062	2.066	.437	45
*450407	S	3.146	4.003	4.008	.468	45
*450410	S	2.000	2.623	2.627	.500	45
*450410N	N	2.000	2.623	2.627	.500	45
450412	**S**	**2.625**	**3.481**	**3.486**	**.500**	**45**
450415	S	1.625	2.996	3.001	.500	45
*450418	S	1.562	2.875	2.879	.468	45
*450424	S	.875	1.874	1.878	.437	45
*450426	S	1.125	2.000	2.004	.375	45
450430	S	1.125	2.875	2.879	.468	45
450431	S	.812	1.250	1.254	.375	45
*450433	S	2.250	3.125	3.130	.500	45
*450433N	N	2.250	3.125	3.130	.500	45
*450438	S	1.562	2.374	2.378	.500	45
*450438N	N	1.562	2.374	2.378	.500	45
450441	S	2.250	2.996	3.001	.500	45
*450441N	N	2.250	2.996	3.001	.500	45
450444	S	1.375	2.502	2.506	.500	45
450446	**S**	**2.000**	**2.713**	**2.717**	**.468**	**45**
*450449	S	1.000	1.561	1.565	.375	45
450451	S	1.500	2.062	2.066	.437	45
*450451H	H	1.500	2.062	2.066	.437	45
450452	S	1.375	2.835	2.839	.468	45
*450452N	N	1.375	2.835	2.839	.468	45
*450453	S	1.437	2.125	2.129	.437	45
*450453N	N	1.437	2.125	2.129	.437	45
*450455	S	1.937	2.623	2.627	.500	45
450456	**S**	**1.375**	**2.716**	**2.720**	**.468**	**45**
450457	S	.984	1.828	1.832	.437	45
450461	S	1.500	2.750	2.754	.500	45
450463	S	1.375	2.750	2.754	.500	45
450467	S	1.625	3.251	3.256	.500	45
*450469	S	.656	1.250	1.254	.375	45
450472	**S**	**1.968**	**2.686**	**2.690**	**.500**	**45**
450474	**S**	**1.968**	**2.875**	**2.879**	**.468**	**45**
*450479	S	1.687	2.437	2.441	.468	45
*450481	S	1.250	2.437	2.441	.468	45
450482	S	1.156	1.828	1.832	.437	45
*450487	S	1.500	2.686	2.690	.500	45
450489	S	2.187	2.875	2.879	.468	45
450492	**S**	**1.375**	**3.350**	**3.355**	**.468**	**45**
*450493	S	1.500	3.350	3.355	.468	45
450494	S	1.750	2.502	2.506	.375	45
450496	S	2.500	3.350	3.355	.468	45
*450497	S	1.968	3.371	3.376	.468	45
450502	S	1.156	1.686	1.690	.375	45
*450503	S	1.312	2.437	2.441	.468	45
*450504	S	1.375	2.623	2.627	.500	45
*450515	S	.812	1.561	1.565	.375	45
450516	S	1.375	3.125	3.130	.500	45
450519	S	2.500	3.251	3.256	.500	45
*450519H	H	2.500	3.251	3.256	.500	45
*450519N	N	2.500	3.251	3.256	.500	45
*450520	S	2.250	3.000	3.005	.500	45
*450520N	N	2.250	3.000	3.005	.500	45
*450521	S	1.312	1.874	1.878	.437	45
*450522	S	1.375	2.004	2.004	.437	45
450523	**S**	**1.500**	**2.875**	**2.879**	**.468**	**45**
*450524	S	1.875	3.371	3.376	.468	45
*450525	S	2.437	3.125	3.130	.500	45

450000 SERIES (cont.)

Part No.	Lip Mat'l	Shaft Size	Hsg. Bore	Seal O.D.	Seal Width	Type/ Illus.
*450532	S	2.062	3.350	3.355	.468	45
450533	S	1.687	3.189	3.194	.437	45
450535	S	.625	1.246	1.250	.375	45
450536	S	.562	1.246	1.250	.375	45
*450536N	N	.562	1.246	1.250	.375	45
450539	S	1.625	3.000	3.005	.500	45
450540	S	1.500	3.189	3.194	.437	45
*450541	S	1.000	1.752	1.756	.375	45
*450543	S	2.000	2.716	2.720	.468	45
*450543H	H	2.000	2.716	2.720	.468	45
450543V	V	2.000	2.716	2.720	.468	45
450545	S	.968	1.575	1.579	.375	45
*450548	S	1.500	2.250	2.254	.375	45
*450548N	N	1.500	2.250	2.254	.375	45
*450549	S	1.000	1.983	1.987	.437	45
*450551	S	2.312	3.125	3.130	.500	45
*450552	S	2.375	3.125	3.130	.500	45
*450552N	N	2.375	3.125	3.130	.500	45
*450553	S	1.000	1.499	1.503	.312	45
*450553H	H	1.000	1.499	1.503	.312	45
*450557	S	.625	1.377	1.381	.406	45
*450559	S	1.250	2.374	2.378	.500	45
*450565	S	2.375	3.125	3.130	.375	45
*450567	S	.875	1.375	1.379	.312	45
*450567H	H	.875	1.375	1.379	.312	45
*450567N	N	.875	1.375	1.379	.312	45
*450567V	V	.875	1.375	1.379	.312	45
*450571	S	2.000	3.251	3.256	.500	45
*450574	S	2.375	3.251	3.256	.500	45
*450574H	H	2.375	3.251	3.256	.500	45
*450574N	N	2.375	3.251	3.256	.500	45
*450580	S	.750	1.575	1.579	.375	45
450588	**S**	**.812**	**1.575**	**1.579**	**.375**	**45**
*450591	S	.812	1.874	1.878	.437	45
*450592	S	.812	1.499	1.503	.312	45
*450592N	N	.812	1.499	1.503	.312	45
450593	**S**	**1.000**	**1.828**	**1.832**	**.296**	**45**
*450596	S	1.687	2.835	2.839	.468	45
*450600	S	1.156	2.250	2.254	.500	45
450604	**S**	**1.125**	**2.250**	**2.254**	**.500**	**45**
*450604N	N	1.125	2.250	2.254	.500	45
*450605	S	2.500	3.371	3.376	.375	45
*450605H	H	2.500	3.371	3.376	.375	45
*450610	S	.750	1.874	1.878	.437	45
*450614	S	2.250	3.251	3.256	.437	45
450621	**S**	**2.156**	**3.189**	**3.194**	**.437**	**45**
*450621N	N	2.156	3.189	3.194	.437	45
450626	S	2.625	3.371	3.376	.468	45
*450628	S	1.062	2.062	2.066	.437	45
450639	**S**	**2.125**	**2.835**	**2.839**	**.468**	**45**
*450645	S	.875	2.000	2.004	.437	45
*450649	S	.656	1.375	1.379	.312	45
*450652	S	1.250	2.000	2.004	.375	45
*450652H	H	1.250	2.000	2.004	.375	45
*450652V	V	1.250	2.000	2.004	.375	45
*450654	S	1.875	2.758	2.762	.437	45
*450654N	N	1.875	2.758	2.762	.437	45
*450655	S	1.937	2.713	2.717	.468	45
450666	**S**	**1.578**	**2.408**	**2.412**	**.500**	**45**
*450680	S	.875	1.499	1.503	.312	45
*450680H	H	.875	1.499	1.503	.312	45
*450680V	V	.875	1.499	1.503	.312	45
*450681	S	2.187	3.125	3.130	.500	45
*450681N	N	2.187	3.125	3.130	.500	45
450686	S	2.375	3.483	3.488	.500	45
*450687	S	1.687	3.125	3.130	.500	45
450693★	**S**	***24,99***	***52,37***	***52,48***	***11,10***	**45**
		.984	**2.062**	**2.066**	**.437**	

For Illustration and Material Data See Technical Section

* The U.S. customer service number is 877-4-TIMKEN. The Canadian customer service numbers are 800-565-4927 (English) and 800-565-0438 (French-Canadian). ★ Metric Seal

450000 SERIES (cont.)

Part No.	Lip Mat'l	Shaft Size	Hsg. Bore	Seal O.D.	Seal Width	Type/ Illus.
*450718	S	2.187	3.000	3.005	.437	45
*450719	S	1.750	3.000	3.005	.500	45
*450719H	H	1.750	3.000	3.005	.500	45
*450720	S	1.875	3.125	3.130	.500	45
*450725	S	2.609	3.350	3.355	.375	45
*450725H	H	2.609	3.350	3.355	.375	45
*450725N	N	2.609	3.350	3.355	.375	45
450737	S	2.250	3.189	3.194	.437	45
*450737N	N	2.250	3.189	3.194	.437	45
*450746	S	1.437	2.686	2.690	.500	45
*450751	S	1.562	2.686	2.690	.500	45
*450755	S	1.625	2.250	2.254	.500	45
*450755H	S	1.625	2.250	2.254	.500	45
450765	**S**	**1.687**	**2.716**	**2.720**	**.468**	**45**
*450774	S	1.375	2.062	2.066	.375	45
450776	**S**	**1.375**	**2.686**	**2.690**	**.500**	**45**
*450779	S	1.875	2.875	2.879	.500	45
*450780	S	.656	1.575	1.579	.375	45
*450781	S	.875	1.575	1.579	.375	45
*450783	S	1.843	2.502	2.506	.500	45
*450791	S	.625	1.124	1.128	.312	45
*450791V	V	.625	1.124	1.128	.312	45
450803	S	1.562	2.716	2.720	.468	45
*450806	S	1.250	2.835	2.839	.468	45
*450808	S	1.437	2.750	2.754	.500	45
*450811★	S	*24,99*	*41,25*	*41,35*	*11,10*	45
		.984	1.624	1.628	.437	
*450814	S	1.500	2.441	2.445	.500	45
*450818	S	1.000	1.575	1.579	.375	45
450819	**S**	**1.625**	**2.835**	**2.839**	**.468**	**45**
*450823	S	1.875	2.502	2.506	.500	45
450867	S	2.125	2.875	2.879	.437	45
*450867H	H	2.125	2.875	2.879	.437	45
*450867N	N	2.125	2.875	2.879	.437	45
*450867V	V	2.125	2.875	2.879	.437	45
*450868	S	1.187	1.752	1.756	.375	45
450869	S	2.156	3.251	3.256	.500	45
*450895	S	.750	1.375	1.379	.312	45
*450895V	V	.750	1.375	1.379	.312	45
*450898N	N	2.125	2.875	2.879	.375	45
*450904	S	2.562	3.481	3.486	.500	45
*450908★	S	*25,00*	*40,00*	*40,10*	*9,50*	45
		.984	1.575	1.579	.374	
450908V	V	.984	1.575	1.579	.374	45
450911	S	1.968	2.742	2.746	.500	45
450911N	**N**	**1.968**	**2.742**	**2.746**	**.500**	**45**
*450929	S	1.750	2.374	2.378	.500	45
*450930	S	1.437	2.000	2.004	.437	45
*450948	S	1.156	1.875	1.878	.437	45
*450963	S	1.562	2.437	2.441	.500	45
450965	S	1.937	3.350	3.355	.468	45
*450966	S	2.000	2.875	2.879	.500	45
*450972	S	2.125	3.371	3.376	.468	45
*450975	S	.625	1.499	1.503	.390	45
450984	**S**	**1.500**	**2.716**	**2.720**	**.468**	**45**
*450988	S	2.375	3.061	3.066	.500	45
*450988H	H	2.375	3.061	3.066	.500	45
*450988N	N	2.375	3.061	3.066	.500	45
*450988V	V	2.375	3.061	3.066	.500	45
*451016	S	1.562	2.125	2.129	.437	45
*451024	S	.625	1.624	1.628	.437	45
*451030	S	1.750	2.717	2.721	.468	45
*451031	S	.781	1.378	1.382	.406	45
*451060	S	1.125	2.125	2.129	.437	45
451078	**S**	**1.875**	**3.251**	**3.256**	**.500**	**45**
451082	**S**	**.968**	**1.874**	**1.878**	**.437**	**45**
*451084	S	1.562	2.250	2.254	.500	45
*451084H	H	1.562	2.250	2.254	.500	45

450000 SERIES (cont.)

Part No.	Lip Mat'l	Shaft Size	Hsg. Bore	Seal O.D.	Seal Width	Type/ Illus.
*451091	S	2.000	3.062	3.066	.500	45
*451096	S	.656	1.125	1.129	.375	45
*451096H	H	.656	1.125	1.129	.375	45
*451100	S	1.125	1.624	1.628	.312	45
*451100H	H	1.125	1.624	1.628	.312	45
*451100N	N	1.125	1.624	1.628	.312	45
*451105	S	1.375	2.875	2.879	.468	45
*451117N	N	1.937	2.824	2.828	.500	45
*451131	S	1.375	2.374	2.378	.375	45
*451133	S	1.125	1.752	1.756	.375	45
*451134	S	1.250	2.062	2.066	.375	45
*451135	S	1.125	2.062	2.066	.375	45
*451135H	H	1.125	2.062	2.066	.375	45
*451138	S	2.250	3.125	3.130	.375	45
*451139	S	1.875	3.000	3.005	.375	45
451143	**S**	**2.625**	**3.251**	**3.256**	**.437**	**45**
451147H	H	1.750	2.502	2.506	.406	45
*451147N	N	1.750	2.502	2.506	.406	45
*451160N	N	2.312	3.000	3.005	.500	45
*451162N	N	1.875	2.500	2.504	.437	45
*451169N	N	1.750	2.411	2.415	.380	45
451182	**S**	**1.170**	**2.031**	**2.035**	**.375**	**45**
*451195	S	1.937	2.502	2.506	.375	45
*451195V	V	1.937	2.502	2.506	.375	45
*451224	S	1.000	1.499	1.503	.250	45
*451226	S	1.687	3.000	3.005	.500	45
*451234	S	2.250	3.061	3.066	.500	45
*451235	S	1.500	3.000	3.005	.500	45
*451258	S	1.125	1.828	1.832	.375	45
*451268H	H	1.375	2.000	2.004	.375	45
*451271	S	2.500	3.251	3.256	.375	45
*451272	S	2.250	3.000	3.005	.375	45
*451275	S	3.250	4.249	4.254	.468	45
*451275N	N	3.250	4.249	4.254	.468	45
*451294	S	.500	1.124	1.128	.312	45
*451294H	H	.500	1.124	1.128	.312	45
*451297	S	.687	1.124	1.128	.312	45
*451308	S	1.500	2.374	2.378	.375	45
*451324	S	.625	1.375	1.379	.312	45
*451338	S	2.187	3.000	3.005	.500	45
*451341	S	2.250	2.996	3.001	.437	45
*451341H	H	2.250	2.996	3.001	.437	45
*451350	S	1.750	3.125	3.130	.500	45
*451385	S	.750	1.983	1.987	.437	45
*451414	S	3.375	4.376	4.381	.562	45
*451414H	H	3.375	4.376	4.381	.562	45
*451414N	N	3.375	4.376	4.381	.562	45
*451447	S	1.875	2.502	2.506	.406	45
*451456	S	1.187	1.874	1.878	.437	45
*451463	S	1.875	2.835	2.839	.468	45
451469	S	1.593	2.623	2.627	.340	45
*451470	S	.796	1.250	1.254	.375	45
*451475	S	2.625	3.543	3.548	.500	45
*451507V	V	1.500	2.252	2.256	.375	45
*451508	S	1.812	2.686	2.690	.437	45
*451509	S	2.500	3.250	3.256	.437	45
*451509H	H	2.500	3.250	3.256	.437	45
*451531	S	.562	1.124	1.128	.312	45
*451555	S	.500	1.375	1.379	.312	45
*451559	S	.687	1.375	1.379	.312	45
*451560	S	.781	1.375	1.379	.312	45
*451560N	N	.781	1.375	1.379	.312	45
*451577	S	.625	1.499	1.503	.312	45
*451580	S	.750	1.499	1.503	.312	45
*451580H	H	.750	1.499	1.503	.312	45
*451581	S	.781	1.499	1.503	.312	45
*451582	S	.937	1.499	1.504	.312	45
451583	**S**	**.968**	**1.499**	**1.503**	**.312**	**45**

For Illustration and Material Data See Technical Section

* The U.S. customer service number is 877-4-TIMKEN. The Canadian customer service numbers are 800-565-4927 (English) and 800-565-0438 (French-Canadian). ★ Metric Seal

450000 SERIES (cont.)

Part No.	Lip Mat'l	Shaft Size	Hsg. Bore	Seal O.D.	Seal Width	Type/ Illus.
451583V	V	.968	1.499	1.503	.312	45
*451656	S	.750	1.624	1.628	.312	45
*451659	S	.875	1.624	1.628	.312	45
*451660	S	.937	1.624	1.628	.312	45
*451662	S	1.000	1.624	1.628	.312	45
*451662V	V	1.000	1.624	1.628	.312	45
*451664	S	1.062	1.624	1.628	.312	45
*451664N	N	1.062	1.624	1.628	.312	45
*451700	S	.875	1.752	1.756	.312	45
*451701	S	.937	1.752	1.756	.312	45
*451703	S	1.000	1.752	1.756	.312	45
*451705	S	1.062	1.752	1.756	.312	45
*451706	S	1.125	1.752	1.756	.312	45
*451707	S	1.156	1.752	1.756	.312	45
*451708	S	1.187	1.752	1.756	.312	45
*451709	S	1.250	1.752	1.756	.312	45
*451709H	H	1.250	1.752	1.756	.312	45
*451718	S	1.062	1.752	1.756	.375	45
*451739	S	.781	1.874	1.878	.437	45
*451772	S	1.062	2.000	2.004	.375	45
*451787	S	1.250	2.062	2.066	.250	45
451817	**S**	**1.812**	**2.437**	**2.441**	**.468**	**45**
*451839N	N	1.625	2.502	2.506	.375	45
451845	**S**	**1.250**	**2.561**	**2.565**	**.500**	**45**
*451853	S	1.875	2.561	2.565	.500	45
451857	**S**	**1.500**	**2.623**	**2.627**	**.500**	**45**
*451858	S	1.593	2.623	2.627	.500	45
*451858H	H	1.593	2.623	2.627	.500	45
*451879	S	1.750	2.686	2.690	.437	45
*451883	S	2.000	2.686	2.690	.437	45
*451883H	H	2.000	2.686	2.690	.437	45
*451905	S	1.312	2.875	2.879	.437	45
*451936	S	1.875	2.875	2.879	.437	45
*451936H	H	1.875	2.875	2.879	.437	45
*451936V	V	1.875	2.875	2.879	.437	45
*451937	S	1.937	2.750	2.754	.500	45
*451937H	H	1.937	2.750	2.754	.500	45
*451943	S	2.000	2.835	2.839	.468	45
*451944	S	2.000	2.875	2.879	.437	45
*451944H	H	2.000	2.875	2.879	.437	45
*451945	S	2.062	2.758	2.762	.437	45
451948	**S**	**2.062**	**2.875**	**2.879**	**.437**	**45**
*451952	S	2.187	2.835	2.839	.468	45
*451953	S	2.187	2.875	2.879	.437	45
*451993	S	1.812	3.125	3.130	.500	45
*452006	S	1.937	2.996	3.001	.437	45
*452008	S	2.000	2.996	3.001	.437	45
*452009	S	2.000	3.000	3.005	.375	45
*452017	S	2.187	2.996	3.001	.437	45
*452018	S	2.187	3.000	3.005	.375	45
*452019	S	2.187	3.062	3.066	.500	45
*452020	S	2.187	3.125	3.130	.375	45
*452023	S	1.875	3.350	3.355	.468	45
*452032	S	2.125	3.251	3.256	.437	45
*452035	S	2.187	3.371	3.376	.468	45
*452038	S	2.375	3.251	3.256	.437	45
*452041	S	1.875	2.502	2.506	.375	45
452086	S	1.670	2.686	2.690	.500	45
*452132	S	.968	1.750	1.754	.437	45
*452152	S	2.312	3.251	3.256	.437	45
*452157	S	4.250	5.251	5.256	.375	45
*452164N	N	1.750	2.502	2.506	.312	45
*452170	S	1.625	2.875	2.879	.500	45
452222	**S**	**1.531**	**2.374**	**2.378**	**.375**	**45**
452261H	H	2.000	2.500	2.504	.437	45
*452336	S	1.000	1.828	1.832	.375	45
*452401	S	1.625	2.437	2.441	.500	45
*452401V	V	1.625	2.437	2.441	.500	45

450000 SERIES (cont.)

Part No.	Lip Mat'l	Shaft Size	Hsg. Bore	Seal O.D.	Seal Width	Type/ Illus.
*452418	S	1.750	2.437	2.441	.500	45
*452554	S	1.500	1.983	1.987	.437	45
452554N	N	1.500	1.983	1.987	.437	45
*452573	S	.975	1.874	1.878	.437	45
*452582	S	.968	1.750	1.754	.375	45
*452584	S	1.062	1.828	1.832	.375	45
*452585	S	1.187	2.062	2.066	.375	45
*452604	S	2.187	3.350	3.355	.500	45
*452612	S	2.125	2.875	2.879	.500	45
*452624	S	2.625	3.351	3.356	.500	45
*452629	S	1.687	2.875	2.879	.500	45
*452636	S	2.250	3.251	3.256	.375	45
452742	S	1.781	2.502	2.506	.312	45
*452744	S	1.000	2.875	2.879	.468	45
*452774	S	1.875	2.625	2.629	.500	45
*452872	S	1.812	2.561	2.565	.437	45
*452920	S	2.250	3.371	3.376	.375	45
*452997	S	1.000	2.000	2.004	.312	45
*453022	S	1.375	2.125	2.130	.375	45
453059	S	.437	1.124	1.128	.406	45
453063	S	1.187	2.047	2.051	.437	45
453065	**S**	**1.500**	**2.254**	**2.258**	**.312**	**45**
453066	S	2.125	2.878	2.882	.375	45
453165	S	1.000	2.062	2.066	.375	45
453182	**S**	**3.000**	**3.999**	**4.004**	**.437**	**45**
*453244	S	2.187	2.875	2.879	.375	45
*453245	S	2.187	3.251	3.256	.375	45
*453246	S	2.375	3.251	3.256	.375	45
*453247	S	2.375	3.371	3.376	.375	45
*453248	S	2.625	3.371	3.376	.375	45
453279	**S**	**1.250**	**3.155**	**3.160**	**.500**	**45**
*453309	S	1.350	2.502	2.506	.500	45
453341	S	1.625	2.374	2.378	.437	45
*453510	S	1.562	2.996	3.000	.312	45
*453613	S	2.250	2.875	2.879	.500	45
*453760	S	1.250	2.437	2.441	.250	45
454088	S	2.750	4.500	4.505	.468	45
454136N	N	2.250	3.350	3.355	.312	45
*454199	S	2.375	3.350	3.355	.312	45
*454242	S	1.218	2.062	2.066	.375	45
*455000	S	2.437	3.543	3.548	.500	45
455001	S	2.500	3.543	3.548	.500	45
*455002	S	2.562	3.623	3.628	.468	45
455003	S	2.625	3.623	3.628	.468	45
*455003N	N	2.625	3.623	3.628	.468	45
455004	S	2.750	3.751	3.756	.500	45
*455004H	H	2.750	3.751	3.756	.500	45
*455004N	N	2.750	3.751	3.756	.500	45
455005	**S**	**2.812**	**3.751**	**3.756**	**.500**	**45**
*455005N	N	2.812	3.751	3.756	.500	45
455006	S	2.875	3.751	3.756	.500	45
455006N	N	2.875	3.751	3.756	.500	45
*455007	S	2.625	3.876	3.881	.468	45
455008	**S**	**2.687**	**3.876**	**3.881**	**.468**	**45**
455009	S	2.750	3.876	3.881	.468	45
*455009N	N	2.750	3.876	3.881	.468	45
455011	S	2.875	4.003	4.008	.468	45
*455011N	N	2.875	4.003	4.008	.468	45
*455011V	V	2.875	4.003	4.008	.468	45
455012	S	2.937	4.003	4.008	.468	45
*455012N	N	2.937	4.003	4.008	.468	45
*455012V	V	2.937	4.003	4.008	.468	45
455013	S	3.000	4.003	4.008	.468	45
*455013H	H	3.000	4.003	4.008	.468	45
*455013N	N	3.000	4.003	4.008	.468	45
*455013V	V	3.000	4.003	4.008	.468	45
455014	S	3.000	4.249	4.254	.625	45
455015	S	3.062	4.249	4.254	.625	45

For Illustration and Material Data See Technical Section

* The U.S. customer service number is 877-4-TIMKEN. The Canadian customer service numbers are 800-565-4927 (English) and 800-565-0438 (French-Canadian).

450000 SERIES (cont.)

Part No.	Lip Mat'l	Shaft Size	Hsg. Bore	Seal O.D.	Seal Width	Type/ Illus.
*455016	S	3.125	4.249	4.254	.625	45
*455017	S	3.187	4.249	4.254	.625	45
455018	S	3.250	4.249	4.254	.625	45
*455018H	H	3.250	4.249	4.254	.625	45
455018N	N	3.250	4.249	4.254	.625	45
455019	**S**	**3.000**	**4.999**	**5.004**	**.468**	**45**
455020	S	3.062	4.999	5.004	.468	45
*455021	S	3.125	4.999	5.004	.468	45
455022	S	3.187	4.999	5.004	.468	45
*455023	S	3.250	4.999	5.004	.468	45
455024	S	3.312	4.999	5.004	.468	45
*455025	S	3.375	4.999	5.004	.468	45
455026	**S**	**3.437**	**4.999**	**5.004**	**.468**	**45**
455027	S	3.500	4.999	5.004	.468	45
*455027H	H	3.500	4.999	5.004	.468	45
455027N	N	3.500	4.999	5.004	.468	45
*455029	S	3.625	4.999	5.004	.468	45
*455029H	H	3.625	4.999	5.004	.468	45
455031	S	3.750	4.999	5.004	.468	45
*455031N	N	3.750	4.999	5.004	.468	45
455032	**S**	**3.812**	**4.999**	**5.004**	**.468**	**45**
455033	S	3.875	4.999	5.004	.468	45
455034	S	3.937	4.999	5.004	.468	45
*455034N	N	3.937	4.999	5.004	.468	45
*455034V	V	3.937	4.999	5.004	.468	45
455035	S	4.000	4.999	5.005	.468	45
455035N	N	4.000	4.999	5.005	.468	45
*455036	S	4.000	5.501	5.506	.562	45
455037	S	4.062	5.501	5.506	.562	45
*455039	S	4.187	5.501	5.506	.562	45
*455040	S	4.250	5.501	5.506	.562	45
*455040H	H	4.250	5.501	5.506	.562	45
*455040N	N	4.250	5.501	5.506	.562	45
*455041	S	4.000	5.751	5.756	.562	45
*455044	S	4.187	5.751	5.756	.562	45
*455045	S	4.250	5.751	5.756	.562	45
*455046	S	4.312	5.751	5.756	.562	45
*455047	S	4.375	5.751	5.756	.562	45
*455049	S	4.500	5.750	5.756	.562	45
*455053	S	4.750	5.751	5.757	.562	45
*455053H	H	4.750	5.751	5.757	.562	45
*455053N	N	4.750	5.751	5.757	.562	45
*455053V	V	4.750	5.750	5.757	.562	45
*455054	S	4.000	6.250	6.256	.562	45
455056	S	4.125	6.250	6.256	.562	45
*455057	S	4.187	6.250	6.256	.562	45
*455058	S	4.250	6.250	6.256	.562	45
*455059	S	4.312	6.250	6.256	.562	45
*455059N	N	4.312	6.250	6.256	.562	45
455060	S	4.375	6.250	6.256	.562	45
455062	S	4.500	6.250	6.256	.562	45
*455062N	N	4.500	6.250	6.256	.562	45
*455064	S	4.625	6.250	6.256	.562	45
*455066	S	4.750	6.250	6.256	.562	45
*455067	S	4.812	6.250	6.256	.562	45
455068	S	4.875	6.250	6.256	.562	45
*455068N	N	4.875	6.250	6.256	.562	45
*455069	S	4.937	6.250	6.256	.562	45
455070	S	5.000	6.250	6.256	.562	45
*455070N	N	5.000	6.250	6.256	.562	45
*455070V	V	5.000	6.250	6.256	.562	45
*455071	S	5.125	6.374	6.382	.625	45
*455071N	N	5.125	6.376	6.382	.625	45
*455072	S	6.000	7.500	7.508	.562	45
455073	S	5.500	6.749	6.757	.625	45
*455074	S	6.125	7.500	7.508	.562	45
455075	S	5.875	7.125	7.133	.625	45
455079	**S**	**2.500**	**3.751**	**3.756**	**.500**	**45**

450000 SERIES (cont.)

Part No.	Lip Mat'l	Shaft Size	Hsg. Bore	Seal O.D.	Seal Width	Type/ Illus.
*455079V	V	2.500	3.751	3.756	.500	45
455080	**S**	**2.125**	**3.623**	**3.628**	**.468**	**45**
*455081V	V	4.187	5.125	5.131	.500	45
*455082	S	2.500	3.876	3.881	.468	45
*455084	S	7.000	8.500	8.509	.750	45
*455085	S	3.312	4.499	4.504	.468	45
*455085V	V	3.312	4.499	4.504	.468	45
455086	S	3.000	4.249	4.254	.468	45
*455086H	H	3.000	4.249	4.254	.468	45
*455086N	N	3.000	4.249	4.254	.468	45
455088	S	3.000	4.499	4.504	.468	45
*455088N	N	3.000	4.499	4.504	.468	45
455088V	V	3.000	4.499	4.504	.468	45
*455090	S	9.000	11.000	11.008	.750	45
455091	S	4.875	5.999	6.007	.625	45
*455091H	H	4.875	5.999	6.007	.625	45
455093	S	2.250	3.500	3.505	.500	45
*455094	S	2.312	3.500	3.505	.500	45
*455094N	N	2.312	3.500	3.505	.500	45
*455095	S	2.375	3.500	3.505	.500	45
455096	S	2.437	3.500	3.505	.500	45
*455096V	V	2.437	3.500	3.505	.500	45
*455098	S	2.562	3.500	3.505	.500	45
*455098H	H	2.562	3.500	3.505	.500	45
*455098N	N	2.562	3.500	3.505	.500	45
455104	S	5.250	6.499	6.507	.625	45
*455105	S	5.375	6.624	6.632	.625	45
*455105N	N	5.375	6.624	6.632	.625	45
*455106	S	5.625	6.874	6.882	.625	45
*455107	S	5.750	7.000	7.008	.625	45
*455107H	H	5.750	7.000	7.008	.625	45
*455107N	N	5.750	7.000	7.008	.625	45
*455107V	V	5.750	7.000	7.008	.625	45
*455109	S	6.250	7.750	7.758	.750	45
*455111	S	6.500	8.000	8.009	.750	45
*455111H	H	6.500	8.000	8.009	.750	45
*455114	S	6.875	8.375	8.382	.750	45
455117	**S**	**7.375**	**8.875**	**8.882**	**.750**	**45**
*455117V	V	7.375	8.875	8.882	.750	45
455121	**S**	**7.875**	**9.375**	**9.383**	**.750**	**45**
*455121N	N	7.875	9.375	9.383	.750	45
455121V	V	7.875	9.375	9.383	.750	45
*455122	S	8.000	10.000	10.008	.750	45
455123	**S**	**8.125**	**10.125**	**10.130**	**.750**	**45**
*455126	S	8.500	10.500	10.510	.750	45
*455126H	H	8.500	10.500	10.510	.750	45
*455128	S	8.750	10.750	10.758	.750	45
455129	S	8.875	10.875	10.885	.750	45
*455130	S	1.937	3.543	3.548	.500	45
455134	**S**	**4.125**	**4.999**	**5.005**	**.468**	**45**
*455134H	H	4.125	4.999	5.005	.468	45
*455134N	N	4.125	4.999	5.005	.468	45
*455134V	V	4.125	4.999	5.005	.468	45
455136	S	2.250	3.481	3.486	.500	45
455137	S	3.250	4.499	4.504	.468	45
*455137V	V	3.250	4.499	4.504	.468	45
*455138	S	4.750	5.750	5.756	.500	45
*455138N	N	4.750	5.750	5.756	.500	45
*455140	S	5.375	6.749	6.757	.625	45
*455142	S	4.125	5.251	5.256	.468	45
455144	**S**	**2.875**	**4.499**	**4.504**	**.468**	**45**
*455145	S	3.125	4.499	4.504	.468	45
455146	S	3.500	4.499	4.504	.468	45
*455146V	V	3.500	4.499	4.504	.468	45
455147	S	2.500	3.500	3.505	.500	45
*455147H	H	2.500	3.500	3.505	.500	45
*455147N	N	2.500	3.500	3.505	.500	45
*455148	S	3.875	5.251	5.256	.468	45

For Illustration and Material Data See Technical Section

* The U.S. customer service number is 877-4-TIMKEN. The Canadian customer service numbers are 800-565-4927 (English) and 800-565-0438 (French-Canadian).

450000 SERIES (cont.)

Part No.	Lip Mat'l	Shaft Size	Hsg. Bore	Seal O.D.	Seal Width	Type/ Illus.
*455149	S	2.625	3.751	3.756	.500	45
*455150	S	3.750	5.251	5.256	.468	45
*455150V	V	3.750	5.251	5.256	.468	45
455151	**S**	**2.687**	**3.751**	**3.756**	**.500**	**45**
*455152	S	2.875	4.125	4.130	.562	45
*455153	S	2.937	4.125	4.130	.562	45
455154	S	3.000	4.125	4.130	.562	45
*455155	S	3.062	4.125	4.130	.562	45
*455156	S	3.125	4.125	4.130	.562	45
*455156N	N	3.125	4.125	4.130	.562	45
*455156V	V	3.125	4.125	4.130	.562	45
*455158	S	3.000	4.376	4.381	.625	45
*455160	S	3.125	4.376	4.381	.625	45
*455161	S	3.187	4.376	4.381	.625	45
*455162	S	3.250	4.376	4.381	.625	45
*455162N	N	3.250	4.376	4.381	.625	45
*455163	S	3.312	4.376	4.381	.625	45
*455163H	H	3.312	4.376	4.381	.625	45
*455164	S	3.375	4.376	4.381	.625	45
*455164N	N	3.375	4.376	4.381	.625	45
455165	S	3.375	4.499	4.504	.468	45
*455165N	N	3.375	4.499	4.504	.468	45
*455165V	V	3.375	4.499	4.504	.468	45
*455166	S	3.437	4.499	4.504	.468	45
*455168	S	3.375	4.626	4.631	.625	45
*455168N	N	3.375	4.626	4.631	.625	45
*455170	S	3.500	4.626	4.631	.625	45
*455170N	N	3.500	4.626	4.631	.625	45
*455172	S	3.625	4.626	4.631	.625	45
*455172N	N	3.625	4.626	4.631	.625	45
*455172V	V	3.625	4.626	4.631	.625	45
455173	S	3.500	4.751	4.756	.625	45
*455173N	N	3.500	4.751	4.756	.625	45
*455174	S	3.562	4.751	4.756	.625	45
*455175	S	3.625	4.751	4.756	.625	45
*455177	S	3.750	4.751	4.756	.625	45
*455178	S	3.812	4.751	4.756	.625	45
*455179	S	3.875	4.751	4.756	.625	45
*455179N	N	3.875	4.751	4.756	.625	45
*455181	S	3.625	4.876	4.881	.625	45
*455183	S	3.750	4.876	4.881	.625	45
*455185	S	3.875	4.876	4.881	.625	45
*455185N	N	3.875	4.876	4.881	.625	45
455186★	S	*100,00*	*123,85*	*123,98*	*15,88*	45
		3.937	4.876	4.881	.625	
455188	S	4.000	5.126	5.131	.625	45
455189	**S**	**3.812**	**5.251**	**5.256**	**.468**	**45**
*455189N	N	3.812	5.251	5.256	.468	45
455191	**S**	**3.937**	**5.251**	**5.256**	**.468**	**45**
455192	S	4.000	5.251	5.256	.468	45
455194	**S**	**4.187**	**5.251**	**5.256**	**.468**	**45**
455195	S	4.250	5.251	5.256	.468	45
*455195H	H	4.250	5.251	5.256	.468	45
*455195V	V	4.250	5.251	5.256	.468	45
*455196	S	4.250	5.376	5.381	.500	45
*455196N	N	4.250	5.376	5.381	.500	45
455197	S	4.312	5.501	5.506	.562	45
455197N	N	4.312	5.501	5.506	.562	45
455198	S	4.375	5.501	5.506	.562	45
*455198N	N	4.375	5.501	5.506	.562	45
455200	S	4.500	5.500	5.506	.562	45
455200N	N	4.500	5.500	5.506	.562	45
*455200V	V	4.500	5.500	5.506	.562	45
*455201	S	4.000	5.999	6.007	.625	45
455203	S	4.125	6.000	6.007	.625	45
*455204	S	4.187	5.999	6.007	.625	45
*455205	S	4.250	5.999	6.007	.625	45
*455205N	N	4.250	5.999	6.007	.625	45

450000 SERIES (cont.)

Part No.	Lip Mat'l	Shaft Size	Hsg. Bore	Seal O.D.	Seal Width	Type/ Illus.
*455206	S	4.312	5.999	6.007	.625	45
*455207	S	4.375	5.999	6.007	.625	45
*455209	S	4.500	6.001	6.007	.625	45
*455211	S	4.625	5.999	6.007	.625	45
*455213	S	4.750	5.999	6.007	.625	45
*455214	S	4.812	5.999	6.007	.625	45
*455215V	V	5.500	6.749	6.756	.500	45
*455216	S	4.937	5.999	6.007	.625	45
*455217	S	4.875	6.127	6.132	.625	45
*455233	S	4.750	5.876	5.881	.625	45
*455234	S	2.250	3.623	3.628	.468	45
*455244	S	2.562	3.750	3.756	.500	45
*455244H	H	2.562	3.751	3.756	.500	45
*455244N	N	2.562	3.751	3.756	.500	45
*455245	S	3.125	4.751	4.756	.625	45
*455247	S	4.937	6.374	6.382	.625	45
*455248	S	2.375	3.543	3.548	.500	45
455249	**S**	**3.375**	**4.688**	**4.693**	**.500**	**45**
*455250	S	2.875	3.623	3.628	.468	45
*455250N	N	2.875	3.623	3.628	.468	45
*455251	S	4.812	5.751	5.756	.562	45
455251H	H	4.812	5.751	5.756	.562	45
*455251N	N	4.812	5.751	5.756	.562	45
455253	**S**	**2.000**	**3.543**	**3.548**	**.500**	**45**
*455254	S	2.250	4.003	4.008	.468	45
*455255	S	3.500	4.875	4.881	.625	45
*455258	S	4.750	6.127	6.132	.625	45
*455259	S	2.250	3.751	3.756	.500	45
455260	**S**	**2.062**	**3.623**	**3.628**	**.468**	**45**
*455262	S	3.500	5.501	5.506	.562	45
*455263	S	3.937	5.376	5.381	.500	45
*455263H	H	3.937	5.376	5.381	.500	45
*455265	S	3.250	4.751	4.756	.625	45
*455267	S	2.312	4.003	4.008	.468	45
*455270	S	10.000	11.000	11.010	.750	45
*455270N	N	10.000	11.000	11.010	.750	45
*455270V	V	10.000	11.000	11.010	.750	45
*455271	S	5.000	5.999	6.007	.625	45
*455271N	N	5.000	5.999	6.007	.625	45
*455271V	V	5.000	6.001	6.007	.625	45
455272	S	2.750	4.003	4.008	.468	45
*455273	S	5.500	6.499	6.507	.625	45
*455273N	N	5.500	6.499	6.507	.625	45
*455273V	V	5.500	6.499	6.507	.625	45
455280	**S**	**2.562**	**3.876**	**3.881**	**.468**	**45**
*455281	S	3.000	3.751	3.756	.500	45
*455281H	H	3.000	3.751	3.756	.500	45
*455281N	N	3.000	3.751	3.756	.500	45
*455282	S	7.000	8.001	8.009	.750	45
*455282N	N	7.000	8.001	8.009	.750	45
*455285	S	5.000	6.250	6.256	.625	45
455290	S	5.062	6.374	6.382	.625	45
*455292	S	1.375	3.500	3.505	.500	45
455294	S	6.500	7.500	7.508	.562	45
*455294N	N	6.500	7.500	7.508	.562	45
*455294V	V	6.500	7.500	7.508	.562	45
*455295	S	4.187	4.999	5.004	.468	45
*455296	S	2.625	4.003	4.008	.468	45
455297	**S**	**5.875**	**7.500**	**7.508**	**.562**	**45**
*455299	S	8.000	9.250	9.260	.750	45
*455300	S	8.000	9.500	9.510	.750	45
455301	S	9.000	10.000	10.010	.750	45
*455303	S	2.875	3.623	3.628	.375	45
*455304	S	3.250	4.249	4.254	.500	45
*455304N	N	3.250	4.249	4.254	.500	45
*455304V	V	3.250	4.249	4.254	.500	45
455308	S	1.500	3.544	3.548	.500	45
455310	S	2.875	4.335	4.340	.437	45

For Illustration and Material Data See Technical Section

* The U.S. customer service number is 877-4-TIMKEN. The Canadian customer service numbers are 800-565-4927 (English) and 800-565-0438 (French-Canadian). ★ Metric Seal

450000 SERIES (cont.)

Part No.	Lip Mat'l	Shaft Size	Hsg. Bore	Seal O.D.	Seal Width	Type/ Illus.
*455310V	V	2.875	4.335	4.340	.437	45
455311	S	2.562	3.543	3.548	.500	45
*455312	S	5.000	6.374	6.382	.625	45
*455312V	V	5.000	6.374	6.382	.625	45
*455315	S	2.750	3.623	3.628	.468	45
*455315N	N	2.750	3.623	3.628	.468	45
*455315V	V	2.750	3.623	3.628	.468	45
*455318	S	5.000	6.749	6.757	.625	45
*455319	S	3.500	5.126	5.131	.625	45
455321	S	2.312	3.751	3.756	.500	45
455322	S	2.750	3.543	3.548	.500	45
455322N	N	2.750	3.543	3.548	.500	45
455322V	V	2.750	3.543	3.548	.500	45
*455325	S	4.500	6.374	6.382	.625	45
*455327	S	6.750	8.000	8.007	.625	45
*455327V	V	6.750	8.000	8.007	.625	45
455328	S	3.250	5.251	5.256	.468	45
455330	**S**	**6.125**	**7.125**	**7.133**	**.625**	**45**
*455330H	H	6.125	7.125	7.133	.625	45
455336	**S**	**3.187**	**4.499**	**4.504**	**.468**	**45**
*455341	S	3.437	4.876	4.881	.625	45
*455342	S	4.500	5.876	5.881	.625	45
*455347	S	2.937	3.876	3.881	.468	45
*455350	S	2.187	3.623	3.628	.468	45
*455351	S	4.500	6.250	6.256	.500	45
*455354	S	3.125	4.003	4.008	.468	45
*455354N	N	3.125	4.003	4.008	.468	45
455355	S	2.875	3.876	3.881	.468	45
455356	**S**	**2.937**	**4.499**	**4.504**	**.468**	**45**
*455363	S	5.750	6.749	6.757	.625	45
455364	S	2.750	3.500	3.505	.500	45
*455364N	N	2.750	3.500	3.505	.500	45
455368	S	2.625	3.500	3.505	.500	45
*455368N	N	2.625	3.500	3.505	.500	45
455369	S	2.500	3.623	3.628	.468	45
*455371	S	4.625	5.751	5.756	.562	45
*455371N	N	4.625	5.751	5.756	.562	45
*455375	S	4.750	6.625	6.632	.625	45
*455377	S	5.000	6.499	6.507	.625	45
*455378	S	4.687	5.751	5.756	.562	45
455378H	H	4.687	5.751	5.756	.562	45
*455378N	N	4.687	5.751	5.756	.562	45
455379	S	3.750	4.751	4.756	.500	45
*455379H	H	3.750	4.751	4.756	.500	45
*455379N	N	3.750	4.751	4.756	.500	45
455379V	V	3.750	4.751	4.756	.500	45
*455380	S	2.375	3.623	3.628	.468	45
*455380N	N	2.375	3.623	3.628	.468	45
*455380V	V	2.375	3.623	3.628	.468	45
*455383	S	2.937	3.751	3.756	.500	45
*455384	S	2.812	4.003	4.008	.468	45
*455389	S	3.625	4.499	4.504	.468	45
*455389H	H	3.625	4.499	4.504	.468	45
*455389V	V	3.625	4.499	4.504	.468	45
*455393	S	4.125	5.126	5.131	.625	45
*455394	S	3.125	5.251	5.256	.468	45
*455395	S	5.250	6.750	6.757	.625	45
455396	**S**	**3.500**	**5.751**	**5.756**	**.562**	**45**
*455397	S	7.875	9.000	9.010	.750	45
*455402	S	3.562	5.751	5.756	.562	45
455406	**S**	**7.750**	**9.250**	**9.260**	**.625**	**45**
*455421	S	7.000	8.750	8.759	.750	45
*455423	S	3.750	5.501	5.506	.562	45
455434	**S**	**2.687**	**3.500**	**3.505**	**.500**	**45**
*455436	S	3.625	5.751	5.756	.562	45
*455437	S	3.500	4.751	4.756	.500	45
455437N	N	3.500	4.751	4.756	.500	45
*455447	S	5.750	6.624	6.632	.625	45

450000 SERIES (cont.)

Part No.	Lip Mat'l	Shaft Size	Hsg. Bore	Seal O.D.	Seal Width	Type/ Illus.
455448	S	5.250	6.250	6.256	.562	45
*455448N	N	5.250	6.250	6.256	.562	45
*455448V	V	5.250	6.250	6.256	.562	45
*455449	S	2.500	3.500	3.505	.375	45
*455452	S	7.000	8.250	8.258	.750	45
*455458	S	2.625	3.623	3.628	.375	45
*455460	S	5.000	7.500	7.507	.562	45
*455461	S	5.375	6.499	6.507	.625	45
*455461N	N	5.375	6.500	6.507	.625	45
455462	**S**	**9.000**	**10.500**	**10.510**	**.750**	**45**
*455464	S	5.312	6.499	6.507	.625	45
455471	**S**	**3.437**	**5.250**	**5.256**	**.468**	**45**
*455472	S	3.437	5.501	5.506	.562	45
*455473	S	4.250	6.127	6.132	.625	45
455475	S	8.250	9.250	9.258	.625	45
455476	S	9.000	10.250	10.260	.750	45
455479	S	3.000	3.876	3.881	.468	45
455479V	V	3.000	3.876	3.881	.468	45
455480	**S**	**6.250**	**7.500**	**7.508**	**.562**	**45**
*455480H	H	6.250	7.500	7.508	.562	45
455480V	V	6.250	7.500	7.508	.562	45
*455483	S	2.625	3.500	3.505	.375	45
*455486	S	3.625	4.751	4.756	.562	45
*455487	S	5.625	6.624	6.631	.625	45
*455487H	H	5.625	6.624	6.631	.625	45
*455487N	N	5.625	6.624	6.631	.625	45
*455489	S	8.500	10.000	10.010	.750	45
*455489H	H	8.500	10.000	10.010	.750	45
*455494N	N	5.187	6.499	6.507	.625	45
*455495	S	5.125	6.499	6.507	.625	45
*455498	S	3.562	4.499	4.504	.468	45
*455498N	N	3.562	4.499	4.504	.468	45
455499	S	3.437	4.249	4.254	.625	45
455500	**S**	**3.298**	**4.125**	**4.130**	**.562**	**45**
455509	S	3.000	3.936	3.941	.500	45
*455511	S	2.843	3.939	3.944	.500	45
*455512	S	4.000	5.374	5.379	.500	45
455513	S	4.000	5.626	5.631	.500	45
*455513N	N	4.000	5.626	5.631	.500	45
*455517	S	7.000	8.000	8.007	.750	45
*455517N	N	7.000	8.000	8.007	.750	45
*455526N	N	3.000	3.876	3.881	.500	45
455536	**S**	**1.750**	**3.543**	**3.548**	**.500**	**45**
455547	S	3.875	5.126	5.131	.625	45
*455547N	N	3.875	5.126	5.131	.625	45
*455551	S	7.500	9.000	9.010	.750	45
*455551N	N	7.500	9.000	9.010	.750	45
455556	S	2.875	4.376	4.381	.625	45
*455559	S	3.500	5.251	5.256	.468	45
455566	**S**	**3.250**	**4.125**	**4.130**	**.562**	**45**
*455566N	N	3.250	4.125	4.130	.562	45
*455566V	V	3.250	4.125	4.130	.562	45
*455575	S	3.937	5.501	5.506	.562	45
455576	**S**	**5.375**	**6.499**	**6.507**	**.562**	**45**
*455577	S	3.250	4.723	4.729	.468	45
455583	S	6.187	7.500	7.508	.562	45
*455583H	H	6.187	7.500	7.507	.562	45
455583N	**N**	**6.187**	**7.500**	**7.507**	**.562**	**45**
455584	**S**	**6.875**	**8.375**	**8.382**	**.625**	**45**
*455584N	N	6.875	8.375	8.382	.625	45
*455591	S	4.937	6.131	6.136	.562	45
*455592	S	6.937	8.129	8.138	.750	45
*455596	S	9.437	10.630	10.640	.750	45
*455596H	H	9.437	10.630	10.640	.750	45
*455601	S	4.500	6.127	6.132	.562	45
*455608	S	3.977	5.376	5.381	.500	45
*455612	S	3.312	5.501	5.506	.562	45
*455612N	N	3.312	5.501	5.506	.562	45

For Illustration and Material Data See Technical Section

* The U.S. customer service number is 877-4-TIMKEN. The Canadian customer service numbers are 800-565-4927 (English) and 800-565-0438 (French-Canadian).

450000 SERIES (cont.)

Part No.	Lip Mat'l	Shaft Size	Hsg. Bore	Seal O.D.	Seal Width	Type/ Illus.
*455613	S	3.375	4.249	4.254	.625	45
*455614	S	4.812	6.499	6.507	.625	45
*455615	S	3.250	4.501	4.506	.468	45
*455618	S	5.750	7.875	7.883	.750	45
*455625	S	4.187	6.373	6.381	.625	45
*455636	S	2.187	3.500	3.505	.500	45
*455645	S	5.250	6.500	6.507	.562	45
*455647	S	2.312	3.543	3.548	.500	45
*455650	S	2.375	4.376	4.381	.625	45
*455652	S	5.625	7.125	7.133	.625	45
455655	**S**	**2.500**	**4.003**	**4.008**	**.468**	**45**
*455659	S	2.125	3.500	3.505	.500	45
*455661	S	5.500	7.876	7.883	.750	45
455685	S	4.625	5.875	5.881	.625	45
*455685N	N	4.625	5.875	5.881	.625	45
*455697	S	3.875	5.125	5.131	.500	45
*455699	S	7.000	8.000	8.007	.562	45
*455712	S	4.250	5.251	5.256	.625	45
*455712N	N	4.250	5.251	5.256	.625	45
*455719	S	2.750	3.876	3.882	.500	45
*455725	S	5.000	6.001	6.007	.500	45
*455725N	N	5.000	6.001	6.007	.500	45
*455728	S	2.375	3.750	3.756	.500	45
*455734	S	3.164	4.249	4.254	.625	45
*455799N	N	5.250	6.250	6.256	.625	45
455820	S	3.000	4.875	4.881	.625	45
*455824	S	5.125	6.251	6.256	.562	45
455828V	V	8.500	9.500	9.509	.625	45
*455832	S	3.625	5.375	5.381	.500	45
*455836	S	3.000	4.003	4.008	.437	45
*455852	S	3.750	5.751	5.756	.562	45
*455854	S	6.250	7.875	7.881	.750	45
455858	**S**	**3.437**	**4.756**	**4.761**	**.562**	**45**
455860	S	2.375	3.876	3.881	.468	45
*455861	S	4.375	6.064	6.071	.625	45
455867V	V	7.500	8.500	8.509	.625	45
*455871	S	9.375	11.375	11.385	.750	45
*455871N	N	9.375	11.375	11.385	.750	45
*455871V	V	9.375	11.375	11.385	.750	45
*455872	S	2.750	3.538	3.543	.500	45
*455872V	V	2.750	3.538	3.543	.500	45
*455894	S	3.375	4.376	4.381	.500	45
*455894N	N	3.375	4.376	4.381	.500	45
*455899	S	3.500	4.375	4.381	.562	45
*455911	S	2.625	3.623	3.629	.500	45
*455923N	N	3.550	4.376	4.381	.375	45
*455930	S	8.875	10.125	10.130	.750	45
*455937	S	3.625	4.751	4.756	.500	45
*455938	S	5.375	6.624	6.632	.562	45
*455942	S	5.356	6.500	6.507	.562	45
*455942H	H	5.356	6.500	6.507	.562	45
*455943	S	4.500	5.512	5.518	.562	45
*455944	S	8.125	9.375	9.379	.750	45
*455945	S	7.872	9.500	9.507	.750	45
*455947	S	3.625	4.874	4.879	.625	45
455948	**S**	**6.875**	**7.875**	**7.883**	**.625**	**45**
*455953	S	4.000	4.999	5.004	.500	45
*455953H	H	4.000	4.999	5.004	.500	45
*455953N	N	4.000	4.999	5.004	.500	45
455956H	H	5.187	6.500	6.507	.625	45
*455956N	N	5.187	6.500	6.507	.625	45
*455956V	V	5.187	6.500	6.507	.625	45
455958	S	3.875	5.376	5.381	.500	45
*455960	S	2.750	3.876	3.881	.375	45
*455963H	H	3.750	4.751	4.756	.484	45
*455963N	N	3.750	4.751	4.756	.484	45
455966	S	8.750	10.500	10.510	.750	45
*455984	S	2.750	3.623	3.628	.375	45

450000 SERIES (cont.)

Part No.	Lip Mat'l	Shaft Size	Hsg. Bore	Seal O.D.	Seal Width	Type/ Illus.
*455991	S	3.500	4.501	4.506	.468	45
455995N	N	3.000	4.003	4.008	.375	45
*456003	S	3.625	4.624	4.629	.500	45
*456011	S	3.125	4.125	4.130	.500	45
*456011V	V	3.125	4.125	4.130	.500	45
*456026	S	3.000	4.249	4.254	.500	45
*456026V	V	3.000	4.249	4.254	.500	45
*456030N	N	4.500	5.501	5.506	.500	45
*456039	S	5.750	7.500	7.508	.562	45
*456039N	N	5.750	7.500	7.508	.562	45
*456041	S	3.750	4.626	4.632	.500	45
*456043	S	3.875	5.751	5.756	.562	45
*456044	S	7.250	8.250	8.257	.625	45
*456047	S	3.625	4.625	4.631	.500	45
456052	S	5.875	7.999	8.007	.750	45
*456053N	N	1.869	3.744	3.749	.500	45
456055	V	6.000	7.001	7.008	.625	45
*456055N	N	6.000	7.001	7.008	.625	45
*456055V	V	6.000	7.001	7.008	.625	45
456057	S	1.937	3.751	3.756	.500	45
*456068	S	3.500	4.376	4.381	.625	45
456105	**S**	**3.187**	**4.249**	**4.254**	**.468**	**45**
*456107	S	5.500	6.750	6.758	.575	45
*456111	S	2.843	4.501	4.506	.375	45
*456112	S	5.375	7.874	7.881	.750	45
*456112N	N	5.375	7.873	7.881	.750	45
*456113	S	3.562	4.500	4.506	.500	45
*456113N	N	3.562	4.500	4.506	.500	45
*456125	S	3.625	4.999	5.004	.500	45
*456127	S	3.750	5.376	5.381	.500	45
*456128	S	3.875	5.501	5.506	.562	45
*456130	S	4.000	5.376	5.381	.500	45
*456135	S	4.250	5.626	5.631	.500	45
*456136N	N	4.250	5.876	5.881	.625	45
*456136V	V	4.250	5.876	5.881	.625	45
456141	**S**	**4.312**	**5.376**	**5.381**	**.500**	**45**
*456150	S	4.375	6.125	6.131	.562	45
456153	S	4.500	5.625	5.631	.500	45
*456160	S	4.750	6.125	6.131	.562	45
*456167	S	4.875	5.999	6.007	.500	45
*456168	S	4.875	6.125	6.131	.562	45
*456174	S	5.375	6.374	6.382	.625	45
*456187V	V	5.375	7.500	7.508	.562	45
*456189	S	5.500	6.624	6.631	.625	45
*456190	S	5.500	6.874	6.882	.625	45
*456190N	N	5.500	6.875	6.882	.625	45
456192	**S**	**5.500**	**7.500**	**7.507**	**.562**	**45**
*456192N	N	5.500	7.500	7.507	.562	45
*456199	S	5.625	7.500	7.508	.562	45
*456214	S	5.750	6.874	6.882	.625	45
*456215	S	5.750	7.125	7.133	.625	45
*456219N	N	6.000	7.125	7.133	.625	45
*456248	S	7.375	9.375	9.382	.750	45
*456267	S	2.125	3.501	3.505	.375	45
*456269	S	2.187	3.543	3.548	.500	45
*456271	S	2.375	3.500	3.505	.375	45
*456271V	V	2.375	3.500	3.505	.375	45
*456273	S	2.500	3.623	3.628	.375	45
*456281N	N	2.750	4.125	4.130	.562	45
*456282	S	2.750	4.249	4.254	.468	45
*456286	S	2.875	4.249	4.254	.625	45
*456287	S	3.125	4.249	4.254	.468	45
*456288	S	3.125	4.249	4.254	.500	45
*456289	S	3.125	4.376	4.381	.562	45
*456289N	N	3.125	4.375	4.381	.562	45
*456290	S	3.250	4.376	4.381	.562	45
*456290V	V	3.250	4.376	4.381	.562	45
*456292	S	3.312	4.249	4.253	.500	45

For Illustration and Material Data See Technical Section

* The U.S. customer service number is 877-4-TIMKEN. The Canadian customer service numbers are 800-565-4927 (English) and 800-565-0438 (French-Canadian).

450000 SERIES (cont.)

Part No.	Lip Mat'l	Shaft Size	Hsg. Bore	Seal O.D.	Seal Width	Type/ Illus.
*456294	S	3.375	4.249	4.254	.500	45
*456294H	H	3.375	4.249	4.254	.500	45
*456294N	N	3.375	4.249	4.254	.500	45
*456301	S	3.125	4.999	5.004	.500	45
456305	**S**	**3.250**	**4.751**	**4.756**	**.484**	**45**
*456306	S	3.250	4.751	4.756	.500	45
*456323	S	3.375	4.751	4.756	.625	45
*456325	S	3.375	4.999	5.004	.500	45
*456327	S	3.375	5.251	5.256	.468	45
*456331	S	3.500	4.999	5.004	.500	45
*456331H	H	3.500	4.999	5.004	.500	45
*456335	S	3.625	5.251	5.256	.468	45
*456339	S	3.750	4.999	5.004	.500	45
*456343	S	3.875	4.751	4.756	.484	45
*456345	S	3.875	4.999	5.004	.500	45
*456345N	N	3.875	4.999	5.004	.500	45
*456350	S	3.937	4.999	5.004	.500	45
*456364	S	7.000	8.000	8.009	.625	45
*456364N	N	7.000	8.000	8.009	.625	45
*456364V	V	7.000	8.000	8.009	.625	45
*456370	S	3.000	4.751	4.756	.625	45
*456380	S	4.375	5.500	5.506	.500	45
*456389	S	3.625	5.501	5.506	.562	45
*456414	S	3.500	4.500	4.506	.500	45
*456414H	H	3.500	4.501	4.506	.500	45
456462	**S**	**9.000**	**10.375**	**10.384**	**.625**	**45**
456464	S	9.910	10.997	11.005	.625	45
*456472	S	2.375	3.623	3.628	.500	45
456472N	N	2.375	3.623	3.628	.500	45
*456483	S	10.000	11.250	11.260	.750	45
*456494	S	4.500	5.375	5.381	.531	45
*456500	S	2.937	3.937	3.942	.500	45
*456554	S	8.500	10.000	10.010	.687	45
*456556	S	4.250	5.250	5.256	.500	45
456557	V	5.125	6.125	6.131	.500	45
*456557V	V	5.125	6.125	6.131	.500	45
456585	S	3.375	4.501	4.506	.468	45
456618	S	3.880	5.690	5.695	.500	45
*456619	S	2.562	3.623	3.628	.500	45
*456621V	V	4.875	6.000	6.006	.562	45
*456622	S	2.250	3.350	3.355	.500	45
*456624	S	3.500	4.376	4.381	.500	45
*456626	S	3.875	4.876	4.881	.500	45
456641	H	4.625	5.500	5.506	.562	45
456648	S	3.312	4.501	4.506	.468	45
*456664	S	2.750	3.500	3.505	.375	45
*456666	S	5.750	7.001	7.008	.562	45
*456676	S	3.875	6.064	6.070	.625	45
*456724	S	7.000	8.377	8.384	.750	45
*456733	S	3.062	4.331	4.336	.500	45
*456744	S	3.625	4.375	4.381	.375	45
456744N	N	3.625	4.375	4.381	.375	45
*456792	S	2.250	3.623	3.628	.500	45
456799	S	3.164	4.999	5.004	.468	45
*456799H	H	3.164	4.999	5.004	.468	45
*456800	S	4.500	6.001	6.007	.500	45
*456830	S	5.125	6.375	6.381	.625	45
456837V	V	2.843	4.003	4.008	.500	45
*456861	S	2.125	3.350	3.355	.500	45
*456865	S	5.000	6.250	6.256	.500	45
456865N	N	5.000	6.250	6.256	.500	45
*456865V	V	5.000	6.250	6.256	.500	45
*456873	S	4.000	5.689	5.695	.500	45
*456876	S	2.750	3.623	3.628	.500	45
*456886	S	2.875	4.003	4.008	.500	45
*456887	S	4.000	5.500	5.506	.500	45
*456888	S	4.500	5.500	5.506	.500	45
*456888N	N	4.500	5.500	5.506	.500	45

450000 SERIES (cont.)

Part No.	Lip Mat'l	Shaft Size	Hsg. Bore	Seal O.D.	Seal Width	Type/ Illus.
*456888V	V	4.500	5.500	5.506	.500	45
*456889	S	4.187	5.500	5.506	.500	45
456890	S	4.812	6.250	6.256	.500	45
*456891	S	4.250	5.500	5.506	.500	45
*456892	S	4.500	5.750	5.756	.500	45
*456909	S	3.125	3.937	3.942	.500	45
456919V	V	3.687	4.501	4.506	.500	45
*456921	S	2.875	4.003	4.008	.375	45
*456946N	N	4.000	5.250	5.256	.375	45
*456967N	N	4.000	5.000	5.005	.312	45
456967V	V	4.000	5.000	5.005	.312	45
*456981	S	3.875	4.751	4.756	.500	45
*456986H	H	5.312	6.500	6.507	.625	45
457034	V	3.125	4.003	4.008	.500	45
457096V	V	10.000	11.500	11.508	.750	45
*457097	S	2.000	3.623	3.628	.500	45
*457131N	N	6.500	8.750	8.757	.750	45
*457134	S	2.875	4.125	4.130	.375	45
*457149N	N	7.750	10.500	10.510	.750	45
*457149V	V	7.750	10.500	10.510	.750	45
*457158	S	2.875	3.876	3.881	.375	45
*457163	S	3.000	4.501	4.506	.468	45
*457165	S	3.000	4.750	4.756	.500	45
*457171	S	3.125	4.375	4.381	.500	45
*457172	S	3.125	4.500	4.506	.500	45
*457173	S	3.125	4.625	4.631	.500	45
*457181	S	3.250	4.376	4.381	.500	45
*457191	S	3.375	4.500	4.506	.500	45
*457196	S	3.500	4.625	4.631	.500	45
*457205	S	3.750	4.875	4.881	.500	45
*457211	S	3.875	4.875	4.881	.500	45
*457247	S	4.750	6.001	6.007	.500	45
*457247N	N	4.750	6.001	6.007	.500	45
*457254	S	5.500	6.500	6.507	.562	45
*457262	S	5.250	6.250	6.256	.500	45
*457262N	N	5.250	6.250	6.256	.500	45
*457278	S	5.000	6.375	6.381	.500	45
457291	**S**	**2.750**	**3.538**	**3.543**	**.437**	**45**
457294	S	4.000	4.750	4.756	.562	45
457295	**S**	**4.437**	**5.500**	**5.506**	**.562**	**25**
457299	S	7.750	9.000	9.010	.625	45
*457316	S	2.750	3.751	3.756	.375	45
*457343	S	2.625	3.751	3.756	.375	45
*457344	S	2.875	3.751	3.756	.375	45
*457349	S	3.000	3.751	3.756	.437	45
*457350	S	3.000	3.876	3.881	.437	45
*457351	S	3.000	4.125	4.130	.437	45
*457352	S	3.250	4.500	4.506	.500	45
*457353	S	3.250	4.626	4.632	.500	45
*457354	S	3.375	4.626	4.632	.500	45
*457355	S	3.625	4.875	4.881	.500	45
*457356	S	4.000	5.125	5.131	.500	45
*457357	S	4.000	5.250	5.256	.500	45
*457358	S	5.250	6.375	6.381	.500	45
*457359	S	5.250	6.625	6.632	.562	45
*457360	S	5.500	6.625	6.632	.562	45
*457361	S	5.500	6.875	6.882	.562	45
*457362	S	5.750	6.750	6.757	.562	45
*457363	S	5.750	6.875	6.882	.562	45
*457364	S	5.750	7.125	7.132	.562	45
*457365	S	6.000	7.125	7.132	.562	45
*457366	S	3.875	5.250	5.256	.500	45
*457382N	N	4.000	4.998	5.004	.375	45
*457466	S	7.000	8.251	8.258	.625	45
*457557	S	5.750	7.500	7.506	.500	45
457585	S	4.562	6.250	6.256	.500	45
*457599	S	3.500	4.376	4.381	.375	45
*457649V	V	4.000	5.125	5.130	.312	45

For Illustration and Material Data See Technical Section

* The U.S. customer service number is 877-4-TIMKEN. The Canadian customer service numbers are 800-565-4927 (English) and 800-565-0438 (French-Canadian).

450000 SERIES (cont.)

Part No.	Lip Mat'l	Shaft Size	Hsg. Bore	Seal O.D.	Seal Width	Type/ Illus.
*457661V	V	4.250	5.876	5.881	.500	45
*457704	S	12.000	13.500	13.508	.750	45
*457734	S	4.720	6.312	6.318	.473	45
*457808	S	6.500	7.627	7.633	.625	45
457874	**S**	**6.125**	**7.627**	**7.633**	**.625**	**45**
*457961	S	3.312	5.125	5.131	.500	45
*457991	S	7.625	9.250	9.258	.625	45
457997	S	10.500	12.000	12.008	.625	45
458009V	V	8.250	9.500	9.509	.625	45

470000 SERIES

Part No.	Lip Mat'l	Shaft Size	Hsg. Bore	Seal O.D.	Seal Width	Type/ Illus.
470004	**S**	**.468**	**1.124**	**1.126**	**.375**	**47**
470005	S	.500	1.124	1.128	.375	47
*470007	S	.562	1.124	1.128	.375	47
470009	S	.625	1.124	1.128	.375	47
*470009N	N	.625	1.124	1.128	.375	47
470014	S	.500	1.250	1.254	.375	47
*470016	S	.562	1.250	1.254	.375	47
470018	S	.625	1.250	1.254	.375	47
*470019	S	.500	1.375	1.379	.406	47
*470021	S	.562	1.375	1.379	.406	47
470023	S	.625	1.375	1.379	.406	47
470025	S	.687	1.375	1.379	.406	47
470027	S	.750	1.375	1.379	.406	47
*470028	S	.750	1.499	1.503	.390	47
*470029	S	.781	1.499	1.503	.390	47
470032	S	.875	1.499	1.503	.390	47
470033	S	.750	1.828	1.832	.437	47
470034	S	.781	1.828	1.832	.437	47
*470037	S	.875	1.828	1.832	.437	47
470039	S	.937	1.828	1.832	.437	47
470041	S	1.000	1.828	1.832	.437	47
470045	S	1.125	1.828	1.832	.437	47
*470047	S	1.187	1.983	1.987	.437	47
470049	S	1.250	1.983	1.987	.437	47
470050	S	1.281	1.983	1.987	.437	47
*470051	S	1.156	2.062	2.066	.437	47
*470052	S	1.187	2.062	2.066	.437	47
*470053	S	1.312	2.374	2.378	.500	47
*470055	S	1.375	2.374	2.378	.500	47
470055N	N	1.375	2.374	2.378	.500	47
*470057	S	1.437	2.374	2.378	.500	47
470059	S	1.500	2.374	2.378	.500	47
*470059H	H	1.500	2.374	2.378	.500	47
*470059N	N	1.500	2.374	2.378	.500	47
*470061	S	1.375	2.437	2.441	.468	47
470062	S	1.437	2.437	2.441	.468	47
*470063	S	1.500	2.437	2.441	.468	47
470064	S	1.562	2.437	2.441	.468	47
470066	S	1.625	2.437	2.441	.468	47
*470067	S	1.500	2.502	2.506	.500	47
*470069	S	1.625	2.623	2.627	.500	47
*470069H	H	1.625	2.623	2.627	.500	47
*470070	S	1.750	2.623	2.627	.500	47
*470071	S	1.875	2.623	2.627	.500	47
*470071H	H	1.875	2.623	2.627	.500	47
470074	S	1.687	2.686	2.690	.500	47
*470076	S	1.750	2.686	2.690	.500	47
470077	S	1.500	2.758	2.762	.500	47
*470080	S	1.687	2.875	2.879	.468	47
*470082	S	1.875	2.875	2.879	.468	47
*470084	S	1.875	2.996	3.001	.500	47
*470085	S	2.000	2.996	3.001	.500	47
*470085H	H	2.000	2.996	3.001	.500	47
*470085N	N	2.000	2.996	3.001	.500	47
470086	S	1.687	3.062	3.066	.500	47
*470087	S	1.750	3.061	3.066	.500	47
470088	**S**	**1.750**	**3.189**	**3.194**	**.437**	**47**
*470090	S	1.812	3.189	3.194	.437	47

470000 SERIES (cont.)

Part No.	Lip Mat'l	Shaft Size	Hsg. Bore	Seal O.D.	Seal Width	Type/ Illus.
*470092	S	1.875	3.189	3.194	.437	47
470094	S	1.937	3.189	3.194	.437	47
*470095	S	2.000	3.189	3.194	.437	47
*470098	S	2.187	3.350	3.355	.468	47
*470101	S	2.375	3.350	3.355	.468	47
*470101N	N	2.375	3.350	3.355	.468	47
*470102N	N	2.000	3.371	3.376	.468	47
*470109	S	1.562	2.750	2.754	.500	47
470109N	N	1.562	2.750	2.754	.500	47
*470115	S	2.125	2.996	3.001	.500	47
*470117	S	1.875	2.750	2.754	.500	47
*470117H	H	1.875	2.750	2.754	.500	47
*470117N	N	1.875	2.750	2.754	.500	47
470119	S	.500	.999	1.003	.375	47
470120	S	1.000	1.499	1.503	.390	47
*470120N	N	1.000	1.499	1.503	.390	47
*470121	S	2.125	3.189	3.194	.437	47
*470122	S	1.437	2.623	2.627	.500	47
470129	S	1.312	2.062	2.066	.437	47
*470132	S	2.250	3.371	3.376	.468	47
470135	S	1.375	2.125	2.129	.437	47
*470135N	N	1.375	2.125	2.129	.437	47
*470136	N	1.500	2.250	2.254	.500	47
*470137	S	.687	1.124	1.128	.375	47
470138V➡	V	1.937	2.686	2.690	.500	47
*470139	S	2.187	2.996	3.001	.500	47
*470140	S	1.250	1.752	1.756	.437	47
470140N	N	1.250	1.752	1.756	.437	47
470141	S	.750	1.250	1.254	.375	47
*470143	S	1.562	2.561	2.565	.500	47
*470144	S	1.437	2.502	2.506	.500	47
*470152	S	1.187	2.125	2.129	.437	47
*470154	S	1.687	2.502	2.506	.500	47
*470154H	H	1.687	2.502	2.506	.500	47
*470155	S	1.750	2.758	2.762	.500	47
*470157	S	1.000	2.000	2.004	.437	47
*470160	S	1.125	2.000	2.004	.437	47
470162	S	1.187	2.000	2.004	.437	47
*470162N	N	1.187	2.000	2.004	.437	47
470163	S	1.250	2.000	2.004	.437	47
470163V	V	1.250	2.000	2.004	.437	47
*470163N	N	1.250	2.000	2.004	.437	47
470165	S	1.250	2.250	2.254	.500	47
*470167	S	1.312	2.250	2.254	.500	47
470169	S	1.375	2.250	2.254	.500	47
*470171	S	1.437	2.250	2.254	.500	47
*470171H	H	1.437	2.250	2.254	.500	47
*470171N	N	1.437	2.250	2.254	.500	47
*470182	S	1.125	1.983	1.987	.437	47
*470183	S	1.750	2.750	2.754	.500	47
*470183N	N	1.750	2.750	2.754	.500	47
*470185	S	1.562	2.502	2.506	.500	47
*470186	S	1.687	2.750	2.754	.500	47
*470187	S	1.000	2.062	2.066	.437	47
470189	S	1.125	1.752	1.756	.437	47
470189H	H	1.125	1.752	1.756	.437	47
*470189N	N	1.125	1.752	1.756	.437	47
470190	S	1.500	2.561	2.565	.500	47
*470194	S	1.625	2.502	2.506	.500	47
470195	**S**	**.312**	**.999**	**1.003**	**.375**	**47**
470199	S	.437	.999	1.003	.375	47
*470199N	N	.437	.999	1.003	.375	47
*470199V	V	.437	.999	1.003	.375	47
*470202	S	.562	.999	1.003	.375	47
*470203	S	.781	1.375	1.379	.406	47
470204	S	.812	1.375	1.379	.406	47
*470205	S	.687	1.499	1.503	.390	47
470207	**S**	**.906**	**1.499**	**1.503**	**.390**	**47**

For Illustration and Material Data See Technical Section

➡ Hydrodynamic Lip Design-CW

* The U.S. customer service number is 877-4-TIMKEN. The Canadian customer service numbers are 800-565-4927 (English) and 800-565-0438 (French-Canadian).

470000 SERIES (cont.)

Part No.	Lip Mat'l	Shaft Size	Hsg. Bore	Seal O.D.	Seal Width	Type/ Illus.
470211	S	.750	1.624	1.628	.437	47
*470212	S	.781	1.624	1.628	.437	47
470215	S	.875	1.624	1.628	.437	47
470219	S	1.000	1.624	1.628	.437	47
*470219N	N	1.000	1.624	1.628	.437	47
*470222	S	.750	1.752	1.756	.437	47
*470223	S	.781	1.752	1.756	.437	47
*470226	S	.875	1.752	1.756	.437	47
470230	S	1.000	1.752	1.756	.437	47
*470230H	H	1.000	1.752	1.756	.437	47
*470233	S	1.000	1.874	1.878	.437	47
470236	S	1.125	1.874	1.878	.437	47
470241	S	1.125	2.062	2.066	.437	47
*470241V	V	1.125	2.062	2.066	.437	47
470244	S	1.250	2.062	2.066	.437	47
470245	S	1.250	2.125	2.129	.437	47
*470247	S	1.312	2.125	2.129	.437	47
*470262	S	1.562	2.623	2.627	.500	47
*470265	S	1.687	2.623	2.627	.500	47
*470265H	H	1.687	2.623	2.627	.500	47
*470267	S	1.812	2.623	2.627	.500	47
*470267V	V	1.812	2.623	2.627	.500	47
*470272	S	1.875	2.686	2.690	.500	47
*470273	S	1.562	2.758	2.762	.500	47
*470283	S	1.875	2.758	2.762	.500	47
*470283H	H	1.875	2.758	2.762	.500	47
*470283N	N	1.875	2.758	2.762	.500	47
470286	S	1.625	2.750	2.754	.500	47
*470291	S	1.750	2.875	2.879	.468	47
*470298	S	1.875	3.000	3.005	.500	47
*470300	S	1.937	3.000	3.005	.500	47
*470301	S	2.000	3.000	3.005	.500	47
*470303	S	2.125	3.000	3.005	.500	47
*470303N	N	2.125	3.000	3.005	.500	47
*470303V	V	2.125	3.000	3.005	.500	47
*470304	S	1.875	3.061	3.066	.500	47
*470308	S	2.125	3.061	3.066	.500	47
470308N	N	2.125	3.061	3.066	.500	47
*470309	S	1.937	3.125	3.130	.500	47
*470310	S	2.000	3.125	3.130	.500	47
*470312	S	2.125	3.125	3.130	.500	47
*470312N	N	2.125	3.125	3.130	.500	47
*470314	S	2.125	3.251	3.256	.500	47
*470314N	N	2.125	3.251	3.256	.500	47
*470315	S	2.187	3.251	3.256	.500	47
*470316	S	2.250	3.251	3.256	.500	47
*470317	S	2.312	3.251	3.256	.500	47
*470320	S	2.375	3.189	3.194	.437	47
*470322	S	2.437	3.251	3.256	.500	47
*470326	S	1.500	2.996	3.001	.500	47
470328	S	1.187	1.686	1.690	.375	47
*470330	S	2.500	3.371	3.376	.468	47
*470330N	N	2.500	3.371	3.376	.468	47
470331N	N	1.843	2.750	2.754	.500	47
470334	**S**	**1.750**	**2.686**	**2.690**	**.375**	**47**
470336	S	1.187	2.250	2.254	.500	47
470340	S	.750	1.561	1.565	.375	47
470342	S	1.062	1.983	1.987	.437	47
*470344	S	1.187	1.828	1.832	.437	47
470347	S	1.187	2.437	2.441	.468	47
*470350	S	2.375	3.371	3.376	.468	47
470351	S	1.750	2.437	2.441	.468	47
*470352	S	1.750	2.502	2.506	.500	47
*470352H	H	1.750	2.502	2.506	.500	47
470354	**S**	**2.187**	**3.189**	**3.194**	**.437**	**47**
*470355	S	.687	1.250	1.254	.375	47
470358	S	1.625	2.374	2.378	.500	47
*470358H	H	1.625	2.374	2.378	.500	47

470000 SERIES (cont.)

Part No.	Lip Mat'l	Shaft Size	Hsg. Bore	Seal O.D.	Seal Width	Type/ Illus.
470358N	N	1.625	2.374	2.378	.500	47
*470359	S	1.750	2.996	3.001	.500	47
*470360	S	2.000	2.686	2.690	.500	47
470361	S	1.750	2.561	2.565	.500	47
470361V	V	1.750	2.561	2.565	.500	47
470362	S	1.156	2.125	2.129	.437	47
*470365	S	2.125	2.875	2.879	.468	47
*470368V	V	1.250	2.125	2.129	.268	47
470380	**S**	**1.500**	**2.375**	**2.378**	**.312**	**47**
470380A	A	1.500	2.375	2.379	.312	47
470380V	**V**	**1.500**	**2.375**	**2.378**	**.312**	**47**
*470381	S	1.125	1.624	1.628	.437	47
*470389	S	2.000	2.750	2.754	.500	47
*470389N	N	2.000	2.750	2.754	.500	47
470390	**S**	**.750**	**1.874**	**1.878**	**.250**	**47**
*470390N	N	.750	1.874	1.878	.250	47
470394	S	1.500	2.125	2.129	.437	47
*470394H	H	1.500	2.125	2.129	.437	47
*470394N	N	1.500	2.125	2.129	.437	47
470398	S	.875	1.374	1.378	.406	47
470403	S	1.375	2.062	2.066	.437	47
470409	**S**	**1.937**	**2.412**	**2.416**	**.468**	**47**
*470410	S	2.000	2.623	2.627	.500	47
*470418	S	1.562	2.875	2.879	.468	47
*470424	S	.875	1.874	1.878	.437	47
*470433	S	2.250	3.125	3.130	.500	47
*470438	S	1.562	2.374	2.378	.500	47
*470441	S	2.250	2.996	3.001	.500	47
*470441V	V	2.250	2.996	3.001	.500	47
*470442V★	V	*30,00*	*72,00*	*72,14*	*9,50*	47
		1.181	2.835	2.840	.374	
*470444	S	1.375	2.502	2.506	.500	47
*470449	S	1.000	1.561	1.565	.375	47
470451	S	1.500	2.062	2.066	.437	47
*470451H	H	1.500	2.062	2.066	.437	47
*470452	S	1.375	2.835	2.839	.468	47
*470453	S	1.437	2.125	2.129	.437	47
*470453N	N	1.437	2.125	2.129	.437	47
*470455	S	1.937	2.623	2.627	.500	47
470460	**S**	**1.687**	**2.561**	**2.565**	**.500**	**47**
*470461	S	1.500	2.750	2.754	.500	47
*470463	S	1.375	2.750	2.754	.500	47
*470479	S	1.687	2.437	2.441	.468	47
*470481	S	1.250	2.437	2.441	.468	47
470487	S	1.500	2.686	2.690	.500	47
470487N	**N**	**1.500**	**2.686**	**2.690**	**.500**	**47**
*470489	S	2.187	2.875	2.879	.468	47
*470494	S	1.750	2.502	2.506	.375	47
*470494N	N	1.750	2.502	2.506	.375	47
*470496	S	2.500	3.350	3.355	.468	47
470503	S	1.312	2.437	2.441	.468	47
*470504	S	1.375	2.623	2.627	.500	47
470506	**S**	**.718**	**1.250**	**1.254**	**.375**	**47**
470515	S	.812	1.561	1.565	.375	47
*470519	S	2.500	3.251	3.256	.500	47
*470519N	S	2.500	3.251	3.256	.500	47
*470520	S	2.250	3.000	3.005	.500	47
*470520N	N	2.250	3.000	3.005	.500	47
*470521	S	1.312	1.874	1.878	.437	47
*470522	S	1.375	2.000	2.004	.437	47
*470523	S	1.500	2.875	2.879	.468	47
*470524	S	1.875	3.371	3.376	.468	47
470530	**S**	**2.000**	**2.996**	**3.001**	**.375**	**47**
470530V	V	2.000	2.996	3.001	.375	47
470541	S	1.000	1.752	1.756	.375	47
*470541N	N	1.000	1.752	1.756	.375	47
470543	S	2.000	2.716	2.720	.468	47
470547	S	2.882	3.431	3.436	.291	47

For Illustration and Material Data See Technical Section

* The U.S. customer service number is 877-4-TIMKEN. The Canadian customer service numbers are 800-565-4927 (English) and 800-565-0438 (French-Canadian). ★ Metric Seal

470000 SERIES (cont.)

Part No.	Lip Mat'l	Shaft Size	Hsg. Bore	Seal O.D.	Seal Width	Type/ Illus.
470548	S	1.500	2.250	2.254	.375	47
*470552	S	2.375	3.125	3.130	.500	47
*470552H	H	2.375	3.125	3.130	.500	47
*470552N	N	2.375	3.125	3.130	.500	47
470553	S	1.000	1.499	1.503	.312	47
*470553H	H	1.000	1.499	1.503	.312	47
*470553N	N	1.000	1.499	1.503	.312	47
470557	S	.625	1.377	1.381	.406	47
*470559	S	1.250	2.374	2.378	.500	47
*470561	S	1.312	2.000	2.004	.375	47
470565	**S**	**2.375**	**3.125**	**3.130**	**.375**	**47**
*470565N	N	2.375	3.125	3.130	.375	47
*470565V	V	2.375	3.125	3.130	.375	47
470567	S	.875	1.375	1.379	.312	47
*470567H	H	.875	1.375	1.379	.312	47
470567N	N	.875	1.375	1.379	.312	47
*470567V	V	.875	1.375	1.379	.312	47
*470574	S	2.375	3.251	3.256	.500	47
470574N	N	2.375	3.251	3.256	.500	47
470588	S	.812	1.575	1.579	.375	47
470590	**S**	**.875**	**1.752**	**1.756**	**.250**	**47**
470592	S	.812	1.499	1.503	.312	47
470593	S	1.000	1.828	1.832	.296	47
470596	**S**	**1.687**	**2.835**	**2.839**	**.468**	**47**
470596V	V	1.687	2.835	2.839	.468	47
470601	**S**	**.781**	**1.250**	**1.254**	**.250**	**47**
470604	S	1.125	2.250	2.254	.500	47
470605	**S**	**2.500**	**3.371**	**3.376**	**.375**	**47**
470606	**S**	**1.062**	**1.686**	**1.690**	**.375**	**47**
*470610	S	.750	1.874	1.878	.437	47
470625	**S**	**1.500**	**2.250**	**2.254**	**.312**	**47**
470625A	A	1.500	2.250	2.254	.312	47
*470625N	N	1.500	2.250	2.254	.312	47
470625V	**V**	**1.500**	**2.250**	**2.254**	**.312**	**47**
*470639	S	2.125	2.835	2.839	.468	47
*470642	S	1.125	2.000	2.004	.500	47
470645	S	.875	2.000	2.004	.437	47
*470650	S	.562	1.000	1.004	.312	47
*470652	S	1.250	2.000	2.004	.375	47
470672	S	1.399	2.250	2.254	.250	47
470680	S	.875	1.499	1.503	.312	47
*470681	S	2.187	3.125	3.130	.500	47
470682	**S**	**1.562**	**2.623**	**2.627**	**.312**	**47**
*470683	S	1.250	1.874	1.878	.375	47
*470684	S	1.562	2.441	2.445	.500	47
470687	**S**	**1.687**	**3.125**	**3.130**	**.500**	**47**
*470687N	N	1.687	3.125	3.130	.500	47
*470706	S	1.250	1.979	1.983	.375	47
470712	**S**	**1.125**	**1.874**	**1.878**	**.250**	**47**
470712A	A	1.125	1.874	1.878	.250	47
*470712N	N	1.125	1.874	1.878	.250	47
470712V	**V**	**1.125**	**1.874**	**1.878**	**.250**	**47**
*470719	S	1.750	3.000	3.005	.500	47
*470719H	H	1.750	3.000	3.005	.500	47
*470720	S	1.875	3.125	3.130	.500	47
470737	S	2.250	3.189	3.194	.437	47
470737N	N	2.250	3.189	3.194	.437	47
*470746	S	1.437	2.686	2.690	.500	47
*470751	S	1.562	2.686	2.690	.500	47
*470755	S	1.625	2.250	2.254	.500	47
470764	**S**	**2.375**	**2.996**	**3.001**	**.500**	**47**
470774	**S**	**1.375**	**2.062**	**2.066**	**.375**	**47**
*470774N	N	1.375	2.062	2.066	.375	47
470774V	V	1.375	2.062	2.066	.375	47
*470776	S	1.375	2.686	2.690	.500	47
*470783	S	1.843	2.502	2.506	.500	47
*470791	S	.625	1.124	1.128	.312	47
*470791H	H	.625	1.124	1.128	.312	47

470000 SERIES (cont.)

Part No.	Lip Mat'l	Shaft Size	Hsg. Bore	Seal O.D.	Seal Width	Type/ Illus.
*470791N	N	.625	1.124	1.128	.312	47
470806	**S**	**1.250**	**2.835**	**2.839**	**.468**	**47**
470808	S	1.437	2.750	2.754	.500	47
*470824★	S	*50,00*	*70,00*	*70,10*	*9,00*	47
		1.969	2.756	2.760	.354	
*470825	S	2.375	3.623	3.628	.375	47
*470856★	S	*50,00*	*65,00*	*65,15*	*8,00*	47
		1.969	2.559	2.565	.315	
*470867	S	2.125	2.875	2.879	.437	47
*470867H	H	2.125	2.875	2.879	.437	47
*470867N	N	2.125	2.875	2.879	.437	47
*470877	S	.875	1.575	1.579	.250	47
470895	S	.750	1.375	1.379	.312	47
470898	**S**	**2.125**	**2.875**	**2.879**	**.375**	**47**
470898V	V	2.125	2.875	2.879	.375	45
470898A	A	2.125	2.875	2.879	.375	47
*470898N	N	2.125	2.875	2.879	.375	47
*470903	S	1.562	2.502	2.506	.375	47
*470929	S	1.750	2.374	2.378	.500	47
470946	**S**	**1.187**	**2.686**	**2.690**	**.500**	**47**
470950	S	1.375	2.437	2.441	.375	47
470954	**S**	**.750**	**1.250**	**1.254**	**.250**	**47**
470954A	A	.750	1.250	1.254	.250	47
*470954H	H	.750	1.250	1.254	.250	47
*470954N	N	.750	1.250	1.254	.250	47
470954V	**V**	**.750**	**1.250**	**1.254**	**.250**	**47**
*470961	S	2.562	3.371	3.376	.468	47
*470972	S	2.125	3.371	3.376	.468	47
*470975	S	.625	1.499	1.503	.390	47
470987	S	2.375	3.481	3.486	.437	47
*470988	S	2.375	3.061	3.066	.500	47
*470988N	N	2.375	3.061	3.066	.500	47
470989	S	1.375	3.000	3.005	.500	47
*470991N	N	1.500	2.062	2.066	.375	47
*471001	S	1.062	1.750	1.754	.375	47
471015	**S**	**.937**	**1.375**	**1.379**	**.312**	**47**
*471016	S	1.562	2.125	2.129	.437	47
471024	S	.625	1.624	1.628	.437	47
*471031	S	.781	1.378	1.382	.406	47
*471060	S	1.125	2.125	2.129	.437	47
471076	**S**	**1.031**	**1.575**	**1.579**	**.312**	**47**
471076V	V	1.031	1.575	1.579	.312	47
471076V	V	1.031	1.575	1.579	.312	47
*471078	S	1.875	3.251	3.256	.500	47
*471084	S	1.562	2.250	2.254	.500	47
*471091	S	2.000	3.062	3.066	.500	47
*471091N	N	2.000	3.062	3.066	.500	47
471100	S	1.125	1.624	1.628	.312	47
*471100N	N	1.125	1.624	1.628	.312	47
471103	**S**	**.375**	**.999**	**1.004**	**.250**	**47**
471105	**S**	**1.375**	**2.875**	**2.879**	**.468**	**47**
*471122	S	1.750	2.437	2.441	.375	47
*471131	S	1.375	2.374	2.378	.375	47
*471131N	N	1.375	2.374	2.378	.375	47
*471133	S	1.125	1.752	1.756	.375	47
*471136	S	1.375	2.248	2.252	.375	47
471137	**S**	**.875**	**1.828**	**1.832**	**.375**	**47**
471138	**S**	**2.250**	**3.125**	**3.130**	**.375**	**47**
*471139	S	1.875	3.000	3.005	.375	47
471141	**S**	**1.750**	**2.875**	**2.879**	**.375**	**47**
471141V	V	1.750	2.875	2.879	.375	47
*471143N	N	2.625	3.251	3.256	.437	47
*471150	S	1.625	2.374	2.378	.375	47
471169	S	1.750	2.411	2.415	.380	47
471169N	N	1.750	2.411	2.415	.380	47
*471171	S	.984	1.500	1.504	.312	47
471192	**S**	**1.375**	**2.125**	**2.129**	**.312**	**47**
471192V	V	1.375	2.125	2.129	.312	47

For Illustration and Material Data See Technical Section

* The U.S. customer service number is 877-4-TIMKEN. The Canadian customer service numbers are 800-565-4927 (English) and 800-565-0438 (French-Canadian). ★ Metric Seal

470000 SERIES (cont.)

Part No.	Lip Mat'l	Shaft Size	Hsg. Bore	Seal O.D.	Seal Width	Type/ Illus.
*471192N	N	1.375	2.125	2.129	.312	47
471193	**S**	**1.301**	**2.000**	**2.004**	**.437**	**47**
471193N	N	1.301	2.000	2.004	.437	47
471195	**S**	**1.937**	**2.502**	**2.506**	**.375**	**47**
*471211	S	.493	1.000	1.004	.250	47
471224	**S**	**1.000**	**1.499**	**1.503**	**.250**	**47**
471224A	A	1.000	1.499	1.503	.250	47
*471224N	N	1.000	1.499	1.503	.250	47
471224V	**V**	**1.000**	**1.499**	**1.503**	**.250**	**47**
471231	**S**	**.812**	**1.375**	**1.379**	**.312**	**47**
471231V	V	.812	1.375	1.379	.312	47
*471246	S	1.250	1.874	1.878	.437	47
471255	**S**	**.625**	**1.375**	**1.379**	**.250**	**47**
471255A	A	.625	1.375	1.379	.250	47
471255V	**V**	**.625**	**1.375**	**1.379**	**.250**	**47**
471264	**S**	**.625**	**1.250**	**1.254**	**.250**	**47**
471264V	V	.625	1.250	1.254	.250	47
471264A	A	.625	1.250	1.254	.250	47
471267	**S**	**.875**	**1.375**	**1.379**	**.250**	**47**
471267A	A	.875	1.375	1.379	.250	47
*471267H	H	.875	1.375	1.379	.250	47
*471267T	T	.875	1.375	1.379	.250	47
471267V	**V**	**.875**	**1.375**	**1.379**	**.250**	**47**
471268	S	1.375	2.000	2.004	.375	47
471268N	N	1.375	2.000	2.004	.375	47
*471268V	V	1.375	2.000	2.004	.375	47
471270	**S**	**1.000**	**1.561**	**1.565**	**.250**	**47**
471270V	V	1.000	1.561	1.565	.250	47
471271	**S**	**2.500**	**3.251**	**3.256**	**.375**	**47**
471271A	A	2.500	3.251	3.256	.375	47
471271V	**V**	**2.500**	**3.251**	**3.256**	**.375**	**47**
471272	**S**	**2.250**	**3.000**	**3.005**	**.375**	**47**
*471272H	H	2.250	3.000	3.005	.375	47
471272N	N	2.250	3.000	3.005	.375	47
471272V	V	2.250	3.000	3.005	.375	47
471276	**S**	**1.375**	**2.441**	**2.445**	**.375**	**47**
*471276N	N	1.375	2.441	2.445	.375	47
471276V	V	1.375	2.441	2.445	.375	47
471281	**S**	**.562**	**1.124**	**1.128**	**.250**	**47**
*471288	S	1.750	2.374	2.378	.375	47
*471288N	N	1.750	2.374	2.378	.375	47
*471289	S	1.625	2.251	2.256	.375	47
*471291V	V	.625	1.181	1.185	.350	47
*471294	S	.500	1.124	1.128	.312	47
*471297	S	.687	1.125	1.129	.312	47
*471297N	N	.687	1.125	1.129	.312	47
*471308	S	1.500	2.374	2.378	.375	47
*471315	S	.562	.999	1.003	.250	47
471316	**S**	**1.562**	**2.686**	**2.690**	**.375**	**47**
*471324	S	.625	1.375	1.379	.312	47
471337	S	.781	1.752	1.756	.312	47
*471338	S	2.187	3.000	3.005	.500	47
471341	**S**	**2.250**	**2.996**	**3.001**	**.437**	**47**
*471341H	H	2.250	2.996	3.001	.437	47
471341N	N	2.250	2.996	3.001	.437	47
471344	**S**	**1.500**	**2.441**	**2.445**	**.375**	**47**
*471353★	S	*30,00*	*62,00*	*62,10*	*9,50*	47
		1.181	2.441	2.445	.374	
471354	**S**	**1.187**	**2.062**	**2.066**	**.250**	**47**
*471376	S	2.250	3.500	3.505	.375	47
471379	**S**	**1.375**	**3.150**	**3.154**	**.375**	**47**
*471385	S	.750	1.983	1.987	.437	47
471391	**S**	**1.937**	**3.125**	**3.130**	**.375**	**47**
*471394	S	2.312	3.251	3.256	.375	47
471405	**S**	**1.437**	**3.000**	**3.005**	**.500**	**47**
471407	**S**	**1.250**	**2.441**	**2.445**	**.375**	**47**
*471410	S	1.687	2.328	2.332	.437	47
471413	**S**	**1.250**	**1.752**	**1.756**	**.250**	**47**

470000 SERIES (cont.)

Part No.	Lip Mat'l	Shaft Size	Hsg. Bore	Seal O.D.	Seal Width	Type/ Illus.
471413A	A	1.250	1.752	1.756	.250	47
*471413N	N	1.250	1.752	1.756	.250	47
471413V	**V**	**1.250**	**1.752**	**1.756**	**.250**	**47**
471419	S	1.625	2.437	2.441	.375	47
471424	**S**	**2.000**	**2.623**	**2.627**	**.312**	**47**
471424A	A	2.000	2.623	2.627	.312	47
471424V	**V**	**2.000**	**2.623**	**2.627**	**.312**	**47**
471442	**S**	**.500**	**.999**	**1.003**	**.250**	**47**
471442A	A	.500	.999	1.003	.250	47
*471442H	H	.500	.999	1.003	.250	47
*471442N	N	.500	.999	1.003	.250	47
471442V	**V**	**.500**	**.999**	**1.003**	**.250**	**47**
471443	S	.781	1.375	1.379	.250	47
*471443N	N	.781	1.375	1.379	.250	47
*471456	S	1.187	1.874	1.878	.437	47
*471463	S	1.875	2.835	2.839	.468	47
*471464H	H	1.125	2.000	2.004	.312	47
471465	S	1.000	1.689	1.693	.250	47
471466	**S**	**.625**	**1.124**	**1.128**	**.250**	**47**
471466A	A	.625	1.124	1.128	.250	47
*471466N	N	.625	1.124	1.128	.250	47
471466V	**V**	**.625**	**1.124**	**1.128**	**.250**	**47**
471472	**S**	**.500**	**1.250**	**1.254**	**.250**	**47**
471472V	V	.500	1.250	1.254	.250	47
*471475	S	2.625	3.543	3.548	.500	47
*471490	S	.500	1.000	1.004	.250	47
471498	**S**	**.750**	**1.575**	**1.579**	**.312**	**47**
*471498H	H	.750	1.575	1.579	.312	47
471504	**S**	**1.750**	**2.437**	**2.441**	**.312**	**47**
471504V	V	1.750	2.437	2.441	.312	47
*471507	S	1.500	2.252	2.256	.375	47
*471507N	N	1.500	2.252	2.256	.375	47
*471509	S	2.500	3.250	3.256	.437	47
*471509V	V	2.500	3.250	3.256	.437	47
471516	**S**	**1.000**	**2.441**	**2.445**	**.375**	**47**
471526	**S**	**.500**	**1.124**	**1.128**	**.250**	**47**
471526V	V	.500	1.124	1.128	.250	47
471526A	A	.500	1.124	1.128	.250	47
471529	**S**	**.687**	**1.124**	**1.128**	**.250**	**47**
471530	**S**	**.531**	**1.124**	**1.128**	**.312**	**47**
471532	**S**	**.593**	**1.124**	**1.128**	**.312**	**47**
471535	**S**	**.562**	**1.250**	**1.254**	**.250**	**47**
471538	**S**	**.687**	**1.250**	**1.254**	**.250**	**47**
471539	**S**	**.812**	**1.250**	**1.254**	**.250**	**47**
*471540	S	.781	1.250	1.254	.375	47
471540V	V	.781	1.250	1.254	.375	47
471549	**S**	**.500**	**1.375**	**1.379**	**.250**	**47**
471551	**S**	**.562**	**1.375**	**1.379**	**.250**	**47**
471553	**S**	**.687**	**1.375**	**1.379**	**.250**	**47**
471554	**S**	**.750**	**1.375**	**1.379**	**.250**	**47**
471554A	A	.750	1.375	1.379	.250	47
*471554N	N	.750	1.375	1.379	.250	47
471554V	**V**	**.750**	**1.375**	**1.379**	**.250**	**47**
471555	S	.500	1.375	1.379	.312	47
471558	**S**	**.593**	**1.375**	**1.379**	**.312**	**47**
*471559	S	.687	1.375	1.379	.312	47
*471560	S	.781	1.375	1.379	.312	47
471564	**S**	**.625**	**1.499**	**1.503**	**.250**	**47**
471567	**S**	**.750**	**1.499**	**1.503**	**.250**	**47**
471570	**S**	**.875**	**1.499**	**1.503**	**.250**	**47**
471570V	**V**	**.875**	**1.499**	**1.503**	**.250**	**47**
471571	**S**	**.937**	**1.499**	**1.503**	**.250**	**47**
471571V	V	.937	1.499	1.503	.250	47
471571V	**V**	**.937**	**1.499**	**1.503**	**.250**	**47**
*471577	S	.625	1.499	1.503	.312	47
471579	**S**	**.687**	**1.499**	**1.503**	**.312**	**47**
*471580	S	.750	1.499	1.503	.312	47
*471581	S	.781	1.499	1.503	.312	47

For Illustration and Material Data See Technical Section

* The U.S. customer service number is 877-4-TIMKEN. The Canadian customer service numbers are 800-565-4927 (English) and 800-565-0438 (French-Canadian). ★ Metric Seal

470000 SERIES (cont.)

Part No.	Lip Mat'l	Shaft Size	Hsg. Bore	Seal O.D.	Seal Width	Type/ Illus.
471612	**S**	**.625**	**1.575**	**1.579**	**.312**	**47**
*471618	S	1.000	1.575	1.579	.312	47
471619	**S**	**1.000**	**2.062**	**2.066**	**.250**	**47**
471633	**S**	**.875**	**1.577**	**1.581**	**.250**	**47**
*471633N	N	.875	1.577	1.581	.250	47
471642	**S**	**.687**	**1.624**	**1.628**	**.250**	**47**
471643	**S**	**.750**	**1.624**	**1.628**	**.250**	**47**
471645	**S**	**.812**	**1.624**	**1.628**	**.250**	**47**
471645V	**V**	**.812**	**1.624**	**1.628**	**.250**	**47**
471646	**S**	**.875**	**1.624**	**1.628**	**.250**	**47**
471647	**S**	**.937**	**1.624**	**1.628**	**.250**	**47**
471648	**S**	**.968**	**1.624**	**1.628**	**.250**	**47**
471649	**S**	**1.000**	**1.624**	**1.628**	**.250**	**47**
471649A	A	1.000	1.624	1.628	.250	47
471649V	**V**	**1.000**	**1.624**	**1.628**	**.250**	**47**
471651	**S**	**1.062**	**1.624**	**1.628**	**.250**	**47**
471652	**S**	**1.125**	**1.624**	**1.628**	**.250**	**47**
471652A	A	1.125	1.624	1.628	.250	47
*471652H	H	1.125	1.624	1.628	.250	47
*471652N	N	1.125	1.624	1.628	.250	47
471652V	**V**	**1.125**	**1.624**	**1.628**	**.250**	**47**
471653	**S**	**.625**	**1.624**	**1.628**	**.312**	**47**
*471656	S	.750	1.624	1.628	.312	47
*471656H	H	.750	1.624	1.628	.312	47
*471659	S	.875	1.624	1.628	.312	47
*471660	S	.937	1.624	1.628	.312	47
*471662	S	1.000	1.624	1.628	.312	47
471684	**S**	**.750**	**1.752**	**1.756**	**.250**	**47**
471686	S	.812	1.752	1.756	.250	47
471688	**S**	**.968**	**1.752**	**1.756**	**.250**	**47**
471689	**S**	**1.000**	**1.752**	**1.756**	**.250**	**47**
471689A	A	1.000	1.752	1.756	.250	47
471689V	**V**	**1.000**	**1.752**	**1.756**	**.250**	**47**
471692	**S**	**1.125**	**1.752**	**1.756**	**.250**	**47**
471692V	V	1.125	1.752	1.756	.250	47
471692A	A	1.125	1.752	1.756	.250	47
*471692N	N	1.125	1.752	1.756	.250	47
*471695	S	.625	1.752	1.756	.312	47
471698	S	.750	1.752	1.756	.312	47
*471700	S	.875	1.752	1.756	.312	47
*471702	S	.968	1.752	1.756	.312	47
*471703	S	1.000	1.752	1.756	.312	47
471705	**S**	**1.062**	**1.752**	**1.756**	**.312**	**47**
*471706	S	1.125	1.752	1.756	.312	47
*471706N	N	1.125	1.752	1.756	.312	47
471707	S	1.156	1.752	1.756	.312	47
471707N	N	1.156	1.752	1.756	.312	47
471709	S	1.250	1.752	1.756	.312	47
*471709H	H	1.250	1.752	1.756	.312	47
*471709N	N	1.250	1.752	1.756	.312	47
*471709V	V	1.250	1.752	1.756	.312	47
*471718	S	1.062	1.752	1.756	.375	47
471729	S	.812	1.874	1.878	.250	47
471730	**S**	**.875**	**1.874**	**1.878**	**.250**	**47**
471733	**S**	**1.000**	**1.874**	**1.878**	**.250**	**47**
*471733N	N	1.000	1.874	1.878	.250	47
471735	**S**	**1.062**	**1.874**	**1.878**	**.250**	**47**
*471735H	H	1.062	1.874	1.878	.250	47
471736	**S**	**1.156**	**1.874**	**1.878**	**.250**	**47**
471737	**S**	**1.250**	**1.874**	**1.878**	**.250**	**47**
471737V	V	1.250	1.874	1.878	.250	47
471744	**S**	**1.000**	**1.983**	**1.987**	**.250**	**47**
471747	**S**	**1.125**	**1.983**	**1.987**	**.250**	**47**
*471749	S	1.187	1.983	1.987	.250	47
471750	**S**	**1.250**	**1.983**	**1.987**	**.250**	**47**
471750A	A	1.250	1.983	1.987	.250	47
471750V	**V**	**1.250**	**1.983**	**1.987**	**.250**	**47**
*471755	S	1.312	1.983	1.987	.437	47

470000 SERIES (cont.)

Part No.	Lip Mat'l	Shaft Size	Hsg. Bore	Seal O.D.	Seal Width	Type/ Illus.
471760	**S**	**1.000**	**2.000**	**2.004**	**.250**	**47**
471760A	A	1.000	2.000	2.004	.250	47
471760V	**V**	**1.000**	**2.000**	**2.004**	**.250**	**47**
471762	**S**	**1.062**	**2.000**	**2.004**	**.250**	**47**
471763	**S**	**1.125**	**2.000**	**2.004**	**.250**	**47**
471763A	A	1.125	2.000	2.004	.250	47
471763V	**V**	**1.125**	**2.000**	**2.004**	**.250**	**47**
471764	**S**	**1.156**	**2.000**	**2.004**	**.250**	**47**
471765	**S**	**1.187**	**2.000**	**2.004**	**.250**	**47**
*471765N	N	1.187	2.000	2.004	.250	47
471766	**S**	**1.250**	**2.000**	**2.004**	**.250**	**47**
471766A	A	1.250	2.000	2.004	.250	47
471766V	**V**	**1.250**	**2.000**	**2.004**	**.250**	**47**
*471770	S	1.000	2.000	2.004	.375	47
471772	S	1.062	2.000	2.004	.375	47
*471781N	N	1.250	2.031	2.035	.375	47
471785	**S**	**1.125**	**2.062**	**2.066**	**.250**	**47**
*471785V	V	1.125	2.062	2.066	.250	47
471787	**S**	**1.250**	**2.062**	**2.066**	**.250**	**47**
471787V	V	1.250	2.062	2.066	.250	47
471787A	A	1.250	2.062	2.066	.250	47
471795	**S**	**1.250**	**2.125**	**2.129**	**.250**	**47**
471795V	V	1.250	2.125	2.129	.250	47
471795N	N	1.250	2.125	2.129	.250	47
471801	**S**	**1.250**	**2.252**	**2.256**	**.375**	**47**
*471801H	H	1.250	2.252	2.256	.375	47
471808	**S**	**1.250**	**2.374**	**2.378**	**.375**	**47**
*471809	S	1.437	2.374	2.378	.375	47
*471810	S	1.562	2.374	2.378	.375	47
*471810V	V	1.562	2.374	2.378	.375	47
*471812	S	1.687	2.374	2.378	.375	47
471817	S	1.812	2.437	2.441	.468	47
471818	**S**	**1.250**	**2.437**	**2.441**	**.375**	**47**
471820	**S**	**1.500**	**2.437**	**2.441**	**.375**	**47**
471821	**S**	**1.562**	**2.437**	**2.441**	**.375**	**47**
*471821H	H	1.562	2.437	2.441	.375	47
471827	**S**	**1.562**	**2.441**	**2.445**	**.375**	**47**
471829	**S**	**1.625**	**2.441**	**2.445**	**.375**	**47**
471829V	V	1.625	2.441	2.445	.375	47
471831	**S**	**1.750**	**2.441**	**2.445**	**.375**	**47**
*471831H	H	1.750	2.441	2.445	.375	47
*471831N	N	1.750	2.441	2.445	.375	47
*471831V	V	1.750	2.441	2.445	.375	47
471833	**S**	**1.250**	**2.502**	**2.506**	**.375**	**47**
471835	**S**	**1.375**	**2.502**	**2.506**	**.375**	**47**
*471837	S	1.500	2.502	2.506	.375	47
*471839	S	1.625	2.502	2.506	.375	47
*471839H	H	1.625	2.502	2.506	.375	47
*471839N	N	1.625	2.502	2.506	.375	47
471841	S	1.843	2.502	2.506	.375	47
471845N	N	1.250	2.561	2.565	.500	47
*471847	S	1.375	2.561	2.565	.500	47
471847N	N	1.375	2.561	2.565	.500	47
*471853	S	1.875	2.561	2.565	.500	47
471854	**S**	**1.937**	**2.561**	**2.565**	**.500**	**47**
471862	**S**	**1.437**	**2.686**	**2.690**	**.375**	**47**
471866	**S**	**1.812**	**2.686**	**2.690**	**.375**	**47**
*471866N	N	1.812	2.686	2.690	.375	47
471868	**S**	**1.875**	**2.686**	**2.690**	**.375**	**47**
471869	S	1.937	2.686	2.690	.375	47
*471869N	N	1.937	2.686	2.690	.375	47
471870	**S**	**2.000**	**2.686**	**2.690**	**.375**	**47**
471883	S	2.000	2.686	2.690	.437	47
471887	**S**	**2.437**	**3.125**	**3.130**	**.375**	**47**
*471887H	H	2.437	3.125	3.130	.375	47
*471887N	N	2.437	3.125	3.130	.375	47
471904	**S**	**1.312**	**2.835**	**2.839**	**.468**	**47**
471915	S	1.500	2.835	2.839	.468	47

For Illustration and Material Data See Technical Section

* The U.S. customer service number is 877-4-TIMKEN. The Canadian customer service numbers are 800-565-4927 (English) and 800-565-0438 (French-Canadian).

470000 SERIES (cont.)

Part No.	Lip Mat'l	Shaft Size	Hsg. Bore	Seal O.D.	Seal Width	Type/ Illus.
471923N	N	1.625	2.875	2.879	.437	47
*471936	S	1.875	2.875	2.879	.437	47
*471940	S	1.937	2.875	2.879	.437	47
*471943	S	2.000	2.835	2.839	.468	47
*471944	S	2.000	2.875	2.879	.437	47
*471949	S	2.125	2.750	2.754	.500	47
*471949H	H	2.125	2.750	2.754	.500	47
*471949N	N	2.125	2.750	2.754	.500	47
471950	**S**	**2.125**	**2.758**	**2.762**	**.437**	**47**
*471950H	H	2.125	2.758	2.762	.437	47
*471950N	N	2.125	2.758	2.762	.437	47
471952	**S**	**2.187**	**2.835**	**2.839**	**.468**	**47**
*471953	S	2.187	2.875	2.879	.437	47
471958	**S**	**1.500**	**3.000**	**3.005**	**.375**	**47**
471981	**S**	**1.687**	**3.000**	**3.005**	**.375**	**47**
471984	**S**	**1.750**	**3.000**	**3.005**	**.375**	**47**
*471984N	N	1.750	3.000	3.005	.375	47
*472005	S	1.875	3.125	3.130	.375	47
*472008	S	2.000	2.996	3.001	.437	47
*472009	S	2.000	3.000	3.005	.375	47
*472009N	N	2.000	3.000	3.005	.375	47
*472010	S	2.000	3.125	3.130	.375	47
472012	**S**	**2.062**	**3.000**	**3.005**	**.375**	**47**
472015	**S**	**2.125**	**3.000**	**3.005**	**.375**	**47**
*472015N	N	2.125	3.000	3.005	.375	47
472015V	V	2.125	3.000	3.005	.375	47
472016	**S**	**2.125**	**3.125**	**3.130**	**.375**	**47**
*472017	S	2.187	2.996	3.001	.437	47
472018	**S**	**2.187**	**3.000**	**3.005**	**.375**	**47**
*472018N	N	2.187	3.000	3.005	.375	47
*472018V	V	2.187	3.000	3.005	.375	47
*472019	S	2.187	3.062	3.066	.500	47
472020	S	2.187	3.125	3.130	.375	47
472029	**S**	**2.500**	**3.189**	**3.194**	**.375**	**47**
*472035	S	2.187	3.371	3.376	.468	47
472041	S	1.875	2.502	2.506	.375	47
*472041N	N	1.875	2.502	2.506	.375	47
*472065	S	.864	1.375	1.379	.250	47
*472065N	N	.864	1.375	1.379	.250	47
472070	**S**	**1.812**	**2.623**	**2.627**	**.375**	**47**
472082	**S**	**2.000**	**2.880**	**2.884**	**.375**	**47**
*472082N	N	2.000	2.880	2.884	.375	47
*472083	S	1.375	2.000	2.004	.300	47
*472129	S	.750	1.263	1.267	.250	47
*472137	S	.625	2.047	2.051	.312	47
472138	**S**	**1.000**	**2.047**	**2.051**	**.312**	**47**
*472138N	N	1.000	2.047	2.051	.312	47
472144	**S**	**1.937**	**2.875**	**2.879**	**.312**	**47**
*472146	S	.625	2.441	2.445	.375	47
472150	**S**	**2.312**	**3.125**	**3.130**	**.375**	**47**
*472150N	N	2.312	3.125	3.130	.375	47
*472150V	V	2.312	3.125	3.130	.375	47
472157	**S**	**4.250**	**5.251**	**5.256**	**.375**	**47**
472164	**S**	**1.750**	**2.502**	**2.506**	**.312**	**47**
472164A	A	1.750	2.502	2.506	.312	47
472164V	**V**	**1.750**	**2.502**	**2.506**	**.312**	**47**
472179	**S**	**1.750**	**2.750**	**2.754**	**.312**	**47**
472179V	V	1.750	2.750	2.754	.312	47
472179A	A	1.750	2.750	2.754	.312	47
*472184★	S	*25,00*	*52,00*	*52,10*	*7,90*	47
		.984	2.047	2.051	.311	
472185	**S**	**1.750**	**2.623**	**2.627**	**.312**	**47**
472185V	V	1.750	2.623	2.627	.312	47
472189A⬅	S	1.500	2.377	2.381	.500	47
472193	**S**	**1.750**	**2.561**	**2.566**	**.312**	**47**
*472207	S	.625	1.624	1.628	.489	47
472213	**S**	**1.562**	**2.250**	**2.254**	**.312**	**47**
472222	S	1.531	2.374	2.379	.375	47

470000 SERIES (cont.)

Part No.	Lip Mat'l	Shaft Size	Hsg. Bore	Seal O.D.	Seal Width	Type/ Illus.
472234	**S**	**2.187**	**2.996**	**3.001**	**.375**	**47**
*472236H	H	2.116	3.189	3.194	.468	47
*472237	S	.781	1.850	1.854	.375	47
472238	**S**	**.968**	**2.440**	**2.445**	**.375**	**47**
472239	**S**	**1.156**	**2.834**	**2.839**	**.375**	**47**
*472246	S	1.750	2.374	2.378	.437	47
472258	**S**	**1.375**	**2.000**	**2.004**	**.312**	**47**
472258A	A	1.375	2.000	2.004	.312	47
*472258N	N	1.375	2.000	2.004	.312	47
472258V	**V**	**1.375**	**2.000**	**2.004**	**.312**	**47**
472287	**S**	**1.375**	**2.106**	**2.110**	**.312**	**47**
472299	**S**	**1.562**	**2.374**	**2.378**	**.312**	**47**
472299V	V	1.562	2.374	2.378	.312	47
472311	**S**	**1.000**	**1.437**	**1.441**	**.250**	**47**
472311V	**V**	**1.000**	**1.437**	**1.441**	**.250**	**47**
472319	**S**	**1.937**	**2.623**	**2.627**	**.312**	**47**
*472319V	V	1.937	2.623	2.627	.312	47
472324	**S**	**.984**	**1.499**	**1.503**	**.250**	**47**
472324A	A	.984	1.499	1.503	.250	47
*472324H	H	.984	1.499	1.503	.250	47
472324V	**V**	**.984**	**1.499**	**1.503**	**.250**	**47**
*472331	S	2.000	2.623	2.627	.375	47
472341	S	2.000	2.742	2.746	.375	47
*472341N	N	2.000	2.742	2.746	.375	47
472350	**S**	**1.187**	**2.165**	**2.169**	**.250**	**47**
472354	**S**	**1.375**	**1.874**	**1.878**	**.250**	**47**
472354V	V	1.375	1.874	1.878	.250	47
*472361	S	.750	2.374	2.378	.375	47
472394	**S**	**1.937**	**3.000**	**3.005**	**.312**	**47**
472397	**S**	**2.000**	**3.000**	**3.005**	**.312**	**47**
472397V	V	2.000	3.000	3.005	.312	47
472409	**S**	**2.125**	**3.189**	**3.194**	**.375**	**47**
*472409N	N	2.125	3.189	3.194	.375	47
*472409V	V	2.125	3.189	3.194	.375	47
472419	**S**	**1.625**	**2.116**	**2.120**	**.312**	**47**
*472419N	N	1.625	2.116	2.120	.312	47
472432	S	1.187	2.441	2.445	.375	47
472439	**S**	**1.875**	**2.623**	**2.627**	**.312**	**47**
472439A	A	1.875	2.623	2.627	.312	47
472439V	V	1.875	2.623	2.627	.312	47
472446	**S**	**1.500**	**3.150**	**3.155**	**.500**	**47**
472452	**S**	**.843**	**1.374**	**1.378**	**.312**	**47**
472466	**S**	**1.500**	**2.048**	**2.052**	**.375**	**47**
472467	S	.500	1.378	1.382	.406	47
*472473	S	3.375	4.376	4.381	.375	47
*472473H	H	3.375	4.376	4.381	.375	47
472475	**S**	**1.187**	**1.874**	**1.878**	**.250**	**47**
472492	**S**	**2.000**	**2.750**	**2.754**	**.312**	**47**
472492V	V	2.000	2.750	2.754	.312	47
472492A	A	2.000	2.750	2.754	.312	47
*472492N	N	2.000	2.750	2.754	.312	47
*472523	S	1.125	1.874	1.878	.375	47
472535	**S**	**1.125**	**2.533**	**2.537**	**.250**	**47**
472536	**S**	**1.250**	**2.877**	**2.881**	**.250**	**47**
472538	**S**	**.750**	**2.127**	**2.131**	**.250**	**47**
472539	**S**	**1.000**	**2.533**	**2.537**	**.250**	**47**
472554	S	1.500	1.983	1.987	.437	47
472560N	**N**	**1.125**	**1.561**	**1.565**	**.250**	**47**
*472560V	V	1.125	1.561	1.565	.250	47
472572	**S**	**1.875**	**2.750**	**2.754**	**.312**	**47**
*472579	S	2.062	2.875	2.879	.375	47
*472591	S	1.500	2.328	2.332	.437	47
472635	S	1.552	2.502	2.506	.500	47
*472635N	N	1.552	2.502	2.506	.500	47
472636	**S**	**2.250**	**3.251**	**3.256**	**.375**	**47**
*472636V	V	2.250	3.251	3.256	.375	47
472642	S	1.375	2.047	2.051	.312	47
472642V	V	1.375	2.047	2.051	.312	47

For Illustration and Material Data See Technical Section

⬅ Hydrodynamic Lip Design-CCW

* The U.S. customer service number is 877-4-TIMKEN. The Canadian customer service numbers are 800-565-4927 (English) and 800-565-0438 (French-Canadian). ★ Metric Seal

470000 SERIES (cont.)

Part No.	Lip Mat'l	Shaft Size	Hsg. Bore	Seal O.D.	Seal Width	Type/ Illus.
472644	**S**	**1.125**	**2.047**	**2.051**	**.312**	**47**
472644V	V	1.125	2.047	2.051	.312	47
472649	**S**	**.750**	**2.047**	**2.051**	**.312**	**47**
*472650	S	.812	1.750	1.754	.312	47
*472651	S	1.250	3.150	3.155	.375	47
472651V	V	1.250	3.150	3.155	.375	47
472653	**S**	**2.000**	**2.835**	**2.839**	**.375**	**47**
472653V	V	2.000	2.835	2.839	.375	47
472655	**S**	**1.437**	**2.312**	**2.316**	**.375**	**47**
472658	S	1.375	2.835	2.839	.375	47
*472658V	V	1.375	2.835	2.839	.375	47
472660	**S**	**1.656**	**2.937**	**2.941**	**.375**	**47**
472674	S	1.125	1.983	1.987	.375	47
472681	S	1.125	2.441	2.445	.375	47
472681V	V	1.125	2.441	2.445	.375	47
472705	**S**	**.562**	**1.000**	**1.004**	**.250**	**47**
472705V	V	.562	1.000	1.004	.250	47
472747	**S**	**1.875**	**2.470**	**2.475**	**.437**	**47**
*472758	S	1.625	2.502	2.506	.250	47
*472758N	N	1.625	2.502	2.506	.250	47
472758V	V	1.625	2.502	2.506	.250	47
472810	**S**	**.437**	**.875**	**.880**	**.250**	**47**
472826	**S**	**1.312**	**2.062**	**2.066**	**.312**	**47**
472843	**S**	**1.375**	**2.623**	**2.627**	**.375**	**47**
472856	S	2.375	3.350	3.355	.438	47
*472857H	H	2.000	2.625	2.630	.375	47
472878	S	.735	1.248	1.252	.250	47
*472916	S	2.250	3.189	3.194	.375	47
*472920	S	2.250	3.371	3.376	.375	47
472924	**S**	**2.000**	**2.875**	**2.879**	**.312**	**47**
472924V	V	2.000	2.875	2.879	.312	47
*472928	S	2.062	3.189	3.194	.375	47
*472940	S	2.187	3.189	3.194	.375	47
472950	**S**	**.812**	**2.441**	**2.445**	**.375**	**47**
472951	S	.937	1.750	1.754	.312	47
472953	**S**	**1.062**	**2.835**	**2.839**	**.375**	**47**
472953V	V	1.062	2.835	2.839	.375	47
472954	**S**	**1.125**	**2.835**	**2.839**	**.375**	**47**
472954V	V	1.125	2.835	2.839	.375	47
473010	**S**	**1.625**	**2.502**	**2.506**	**.312**	**47**
473010V	V	1.625	2.502	2.506	.312	47
473010A	A	1.625	2.502	2.506	.312	47
473010N	N	1.625	2.502	2.506	.312	47
473016	**S**	**1.437**	**2.250**	**2.254**	**.312**	**47**
*473016N	N	1.437	2.250	2.254	.312	47
*473049V★	V	*30,00*	*62,00*	*62,10*	*7,00*	47
		1.181	2.441	2.445	.276	
*473056	S	1.552	2.623	2.627	.500	47
*473056N	N	1.552	2.623	2.627	.500	47
473096	**S**	**.375**	**.875**	**.880**	**.250**	**47**
473117	S	1.625	2.328	2.332	.437	47
*473117N	N	1.625	2.328	2.332	.437	47
*473135	S	1.250	1.686	1.691	.250	47
473135V	**V**	**1.250**	**1.686**	**1.691**	**.250**	**47**
473157	**S**	**1.750**	**2.449**	**2.453**	**.312**	**47**
473179	**S**	**1.875**	**2.758**	**2.762**	**.375**	**47**
*473196	S	.750	1.783	1.787	.250	47
473197	**S**	**1.375**	**2.835**	**2.839**	**.312**	**47**
*473197V	V	1.375	2.835	2.839	.312	47
473203	**S**	**1.187**	**1.752**	**1.756**	**.250**	**47**
473204	**S**	**2.125**	**2.750**	**2.754**	**.375**	**47**
*473204N	N	2.125	2.750	2.754	.375	47
473205	**S**	**1.187**	**2.125**	**2.129**	**.250**	**47**
473210	**S**	**1.312**	**2.000**	**2.004**	**.312**	**47**
*473210V	V	1.312	2.000	2.004	.312	47
473211	**S**	**1.312**	**2.125**	**2.129**	**.312**	**47**
473212	**S**	**1.312**	**2.250**	**2.254**	**.312**	**47**
473212A	A	1.312	2.250	2.254	.312	47

470000 SERIES (cont.)

Part No.	Lip Mat'l	Shaft Size	Hsg. Bore	Seal O.D.	Seal Width	Type/ Illus.
473213	**S**	**1.312**	**2.374**	**2.378**	**.312**	**47**
473214	**S**	**1.375**	**2.250**	**2.254**	**.312**	**47**
473214V	V	1.375	2.250	2.254	.312	47
473214A	A	1.375	2.250	2.254	.312	47
473215	**S**	**1.375**	**2.374**	**2.378**	**.312**	**47**
473224	**S**	**1.437**	**2.125**	**2.129**	**.312**	**47**
473225	**S**	**1.437**	**2.374**	**2.378**	**.312**	**47**
473226	**S**	**1.437**	**2.502**	**2.506**	**.312**	**47**
473227	**S**	**1.500**	**2.125**	**2.129**	**.312**	**47**
*473227N	N	1.500	2.125	2.129	.312	47
473227V	V	1.500	2.125	2.129	.312	47
473228	**S**	**1.500**	**2.502**	**2.506**	**.312**	**47**
473228V	V	1.500	2.502	2.506	.312	47
*473228N	N	1.500	2.502	2.506	.312	47
473229	**S**	**1.562**	**2.502**	**2.506**	**.312**	**47**
473230	**S**	**1.625**	**2.250**	**2.254**	**.312**	**47**
473231	**S**	**1.625**	**2.374**	**2.378**	**.312**	**47**
473231V	V	1.625	2.374	2.378	.312	47
473231A	A	1.625	2.374	2.378	.312	47
473232	**S**	**1.625**	**2.623**	**2.627**	**.312**	**47**
473233	**S**	**1.687**	**2.374**	**2.378**	**.312**	**47**
473234	**S**	**1.687**	**2.502**	**2.506**	**.312**	**47**
473235	**S**	**1.687**	**2.623**	**2.627**	**.312**	**47**
473236	**S**	**1.687**	**2.750**	**2.754**	**.312**	**47**
473237	**S**	**1.750**	**2.374**	**2.378**	**.312**	**47**
473237V	**V**	**1.750**	**2.374**	**2.378**	**.312**	**47**
473238	**S**	**1.875**	**2.875**	**2.879**	**.312**	**47**
473238V	V	1.875	2.875	2.879	.312	47
473239	**S**	**1.875**	**3.000**	**3.005**	**.312**	**47**
473240	**S**	**1.875**	**3.125**	**3.130**	**.312**	**47**
473241	**S**	**1.937**	**2.750**	**2.754**	**.312**	**47**
473242	**S**	**2.000**	**3.125**	**3.130**	**.312**	**47**
*473242V	V	2.000	3.125	3.130	.312	47
473243	**S**	**2.125**	**3.251**	**3.256**	**.375**	**47**
473244	**S**	**2.187**	**2.875**	**2.879**	**.375**	**47**
473245	**S**	**2.187**	**3.251**	**3.256**	**.375**	**47**
*473246	S	2.375	3.251	3.256	.375	47
*473247	S	2.375	3.371	3.376	.375	47
*473248	S	2.625	3.371	3.376	.375	47
473258	**S**	**1.375**	**2.561**	**2.565**	**.375**	**47**
473259	**S**	**1.125**	**2.441**	**2.445**	**.250**	**47**
*473259V	V	1.125	2.441	2.445	.250	47
473274	**S**	**2.500**	**3.428**	**3.433**	**.375**	**47**
473274N	N	2.500	3.428	3.433	.375	47
*473285V	V	.875	1.750	1.754	.312	47
*473304	S	1.375	2.082	2.087	.312	47
473313	**S**	**1.750**	**3.061**	**3.066**	**.375**	**47**
473317	**S**	**1.687**	**2.328**	**2.332**	**.312**	**47**
*473317N	N	1.687	2.328	2.332	.312	47
473336	S	1.718	2.561	2.565	.500	47
473367	**S**	**1.625**	**2.437**	**2.441**	**.312**	**47**
473367V	V	1.625	2.437	2.441	.312	47
*473378	S	1.062	1.874	1.878	.375	47
473380	**S**	**1.000**	**1.575**	**1.579**	**.250**	**47**
473405	**S**	**.593**	**1.250**	**1.254**	**.312**	**47**
473406	S	.750	1.828	1.832	.375	47
473407	S	.750	1.983	1.987	.250	47
473412	S	.812	1.828	1.832	.375	47
473413	S	.843	1.499	1.503	.250	47
473414	S	.843	1.624	1.628	.250	47
473415	**S**	**.843**	**1.828**	**1.832**	**.312**	**47**
473416	S	.737	1.375	1.379	.343	47
473419	**S**	**1.062**	**1.828**	**1.832**	**.375**	**47**
473420	**S**	**1.062**	**2.062**	**2.066**	**.375**	**47**
473421	**S**	**1.312**	**2.106**	**2.110**	**.375**	**47**
473422	**S**	**1.312**	**1.983**	**1.987**	**.375**	**47**
473423	**S**	**1.312**	**1.874**	**1.878**	**.375**	**47**
473424	**S**	**1.281**	**2.000**	**2.004**	**.375**	**47**

For Illustration and Material Data See Technical Section

* The U.S. customer service number is 877-4-TIMKEN. The Canadian customer service numbers are 800-565-4927 (English) and 800-565-0438 (French-Canadian). ★ Metric Seal

470000 SERIES (cont.)

Part No.	Lip Mat'l	Shaft Size	Hsg. Bore	Seal O.D.	Seal Width	Type/ Illus.
473425	**S**	**1.187**	**1.828**	**1.832**	**.375**	**47**
473426	**S**	**1.187**	**1.983**	**1.987**	**.375**	**47**
473427	**S**	**1.156**	**2.062**	**2.066**	**.375**	**47**
473428	S	1.156	1.984	1.988	.250	47
*473428V	V	1.156	1.984	1.988	.250	47
473435	S	1.343	2.106	2.110	.375	47
473436	S	1.343	2.125	2.129	.375	47
473437	S	1.437	2.623	2.627	.375	47
473438	**S**	**1.468**	**2.375**	**2.379**	**.375**	**47**
473439	**S**	**1.468**	**2.437**	**2.441**	**.375**	**47**
473440	**S**	**1.500**	**2.750**	**2.754**	**.312**	**47**
473441	**S**	**1.562**	**2.750**	**2.754**	**.375**	**47**
473442	**S**	**1.562**	**2.875**	**2.879**	**.375**	**47**
473443	S	1.625	2.750	2.754	.375	47
473444	**S**	**1.625**	**2.875**	**2.879**	**.375**	**47**
473444V	V	1.625	2.875	2.879	.375	47
473445	**S**	**1.687**	**2.437**	**2.441**	**.312**	**47**
*473445V	V	1.687	2.437	2.441	.312	47
473446	**S**	**1.687**	**2.875**	**2.879**	**.375**	**47**
473447	**S**	**1.750**	**2.758**	**2.762**	**.375**	**47**
473448	**S**	**1.750**	**2.996**	**3.001**	**.375**	**47**
473449	**S**	**1.812**	**2.750**	**2.754**	**.375**	**47**
473450	**S**	**1.812**	**2.875**	**2.879**	**.375**	**47**
473450V	V	1.812	2.875	2.879	.375	47
473451	S	1.843	2.623	2.627	.375	47
473452	**S**	**1.843**	**2.750**	**2.754**	**.375**	**47**
473453	S	1.843	2.875	2.879	.375	47
473454	**S**	**1.875**	**2.502**	**2.506**	**.312**	**47**
473455	**S**	**1.875**	**2.835**	**2.839**	**.375**	**47**
*473456	S	1.875	2.996	3.000	.375	47
473457	**S**	**1.875**	**3.061**	**3.066**	**.375**	**47**
473458	**S**	**1.875**	**3.189**	**3.194**	**.375**	**47**
473459	**S**	**1.937**	**2.686**	**2.690**	**.312**	**47**
473460	**S**	**1.937**	**2.996**	**3.001**	**.375**	**47**
473461	**S**	**1.937**	**3.061**	**3.066**	**.375**	**47**
473462	**S**	**1.937**	**3.189**	**3.194**	**.375**	**47**
473463	**S**	**2.000**	**3.062**	**3.066**	**.375**	**47**
473464	**S**	**2.000**	**3.189**	**3.194**	**.375**	**47**
473466	**S**	**2.062**	**2.996**	**3.001**	**.375**	**47**
473467	**S**	**2.125**	**2.996**	**3.001**	**.375**	**47**
473468	S	2.125	3.061	3.066	.375	47
*473469	S	2.125	3.350	3.355	.375	47
473471	**S**	**2.187**	**3.062**	**3.066**	**.375**	**47**
473473	**S**	**2.250**	**3.061**	**3.066**	**.375**	**47**
473474	**S**	**2.375**	**3.061**	**3.066**	**.375**	**47**
473475	**S**	**2.375**	**3.189**	**3.194**	**.375**	**47**
473476➡	N	2.500	3.150	3.155	.315	47
473490	**S**	**1.562**	**3.150**	**3.155**	**.312**	**47**
473517	**S**	**1.562**	**2.125**	**2.129**	**.375**	**47**
473546	S	.551	1.000	1.004	.312	47
473551	**S**	**1.250**	**2.047**	**2.051**	**.375**	**47**
*473559	S	1.730	2.875	2.879	.468	47
473560N★➡	N	*42,00*	*56,00*	*56,16*	*7,00*	47
		1.654	2.205	2.211	.276	
*473571	S	.750	1.250	1.255	.275	47
473573	**S**	**2.375**	**3.000**	**3.005**	**.375**	**47**
473677★	S	*40,00*	*55,00*	*55,09*	*8,00*	47
		1.575	2.165	2.169	.315	
473694	**S**	**1.625**	**2.000**	**2.004**	**.250**	**47**
473796	**S**	**1.750**	**2.565**	**2.570**	**.312**	**47**
*473810V★	V	*50,00*	*66,00*	*66,22*	*8,00*	47
		1.969	2.598	2.607	.315	
473812	S	1.312	2.166	2.170	.375	47
473814	S	1.968	2.623	2.627	.312	47
473823★	S	*35,00*	*55,00*	*55,18*	*8,00*	47
		1.378	2.165	2.172	.315	
*474007	S	2.187	3.190	3.195	.625	47
*474069	S	2.125	2.561	2.565	.492	47

470000 SERIES (cont.)

Part No.	Lip Mat'l	Shaft Size	Hsg. Bore	Seal O.D.	Seal Width	Type/ Illus.
*474090	S	1.437	2.061	2.066	.312	47
*474096★	S	*51,00*	*65,00*	*65,10*	*7,00*	47
		2.008	2.559	2.563	.276	
*474097★	S	*36,00*	*50,00*	*50,08*	*7,00*	47
		1.417	1.969	1.972	.276	
*474113★	S	*36,00*	*55,00*	*55,09*	*6,50*	47
		1.417	2.165	2.169	.256	
*474119★	S	*38,00*	*58,00*	*58,11*	*8,00*	47
		1.496	2.283	2.288	.315	
*474121★	S	*36,00*	*55,00*	*55,12*	*9,50*	47
		1.417	2.165	2.170	.374	
*474125N★	N	*35,00*	*64,00*	*64,14*	*9,50*	47
		1.378	2.520	2.525	.374	
474127	S	1.417	2.250	2.254	.250	47
474131	S	.750	1.302	1.306	.250	47
474133★	S	*40,00*	*74,00*	*74,12*	*10,00*	47
		1.575	2.913	2.918	.394	
474134★	S	*50,00*	*66,50*	*66,62*	*9,52*	47
		1.969	2.618	2.623	.375	
*474135N★	N	*42,00*	*65,05*	*65,15*	*9,50*	47
		1.654	2.561	2.565	.374	
*474137★	S	*43,00*	*62,00*	*62,10*	*9,50*	47
		1.693	2.441	2.445	.374	
474161★	S	*40,01*	*65,00*	*65,13*	*9,53*	47
		1.575	2.559	2.564	.375	
*474198	S	2.375	3.350	3.355	.703	47
474216	S	1.625	2.562	2.565	.375	47
474230	S	2.875	3.540	3.548	.315	47
474235	S	.937	1.850	1.854	.312	47
474241V★➡	V	*42,00*	*58,00*	*58,17*	*7,00*	47
		1.654	2.283	2.290	.276	
*474247	S	1.625	2.750	2.754	.312	47
474250	**S**	**1.000**	**1.686**	**1.690**	**.250**	**47**
474252	**S**	**.937**	**1.752**	**1.756**	**.250**	**47**
474253	**S**	**.812**	**1.499**	**1.503**	**.250**	**47**
474254	**S**	**1.187**	**2.437**	**2.441**	**.250**	**47**
474255	**S**	**1.187**	**2.250**	**2.254**	**.250**	**47**
474256	**S**	**1.187**	**2.441**	**2.445**	**.250**	**47**
474260	**S**	**1.156**	**1.686**	**1.690**	**.250**	**47**
474261	**S**	**.687**	**1.187**	**1.191**	**.187**	**47**
474264	**S**	**1.437**	**2.437**	**2.441**	**.312**	**47**
474265	**S**	**1.687**	**2.686**	**2.691**	**.312**	**47**
474269	**S**	**1.937**	**2.437**	**2.441**	**.250**	**47**
474272	**S**	**2.000**	**2.716**	**2.721**	**.375**	**47**
474273	**S**	**.781**	**1.828**	**1.833**	**.250**	**47**
474274	**S**	**1.625**	**2.750**	**2.754**	**.312**	**47**
474276	**S**	**1.500**	**1.983**	**1.988**	**.250**	**47**
474276V	V	1.500	1.983	1.988	.250	47
474277	**S**	**.437**	**1.124**	**1.128**	**.250**	**47**
474278	**S**	**1.250**	**1.686**	**1.691**	**.250**	**47**
474279N	**N**	**.375**	**.836**	**.841**	**.187**	**47**
474281	**S**	**1.500**	**2.758**	**2.763**	**.312**	**47**
474288★	S	*36,00*	*58,00*	*58,30*	*8,00*	47
		1.417	2.283	2.295	.315	
475001	S	2.500	3.543	3.548	.500	47
*475001N	N	2.500	3.543	3.548	.500	47
*475002	S	2.562	3.623	3.628	.468	47
*475002N	N	2.562	3.623	3.628	.468	47
*475003	S	2.625	3.623	3.628	.468	47
475003N	N	2.625	3.623	3.628	.468	47
*475004	S	2.750	3.751	3.756	.500	47
475004H	H	2.750	3.751	3.756	.500	47
*475004N	N	2.750	3.751	3.756	.500	47
*475006	S	2.875	3.751	3.756	.500	47
*475006N	N	2.875	3.751	3.756	.500	47
*475007	S	2.625	3.876	3.881	.468	47
*475009	S	2.750	3.876	3.881	.468	47
475009N	N	2.750	3.876	3.881	.468	47
*475011	S	2.875	4.003	4.008	.468	47

For Illustration and Material Data See Technical Section
➡ Hydrodynamic Lip Design-CW
* The U.S. customer service number is 877-4-TIMKEN. The Canadian customer service numbers are 800-565-4927 (English) and 800-565-0438 (French-Canadian). ★ Metric Seal

470000 SERIES (cont.)

Part No.	Lip Mat'l	Shaft Size	Hsg. Bore	Seal O.D.	Seal Width	Type/ Illus.
*475012	S	2.937	4.003	4.008	.468	47
475012N	N	2.937	4.003	4.008	.468	47
*475013	S	3.000	4.003	4.008	.468	47
*475013N	N	3.000	4.003	4.008	.468	47
*475014	S	3.000	4.249	4.254	.625	47
*475016	S	3.125	4.249	4.254	.625	47
*475018	S	3.250	4.249	4.254	.625	47
*475019	S	3.000	4.999	5.004	.468	47
*475021	S	3.125	4.999	5.004	.468	47
*475023	S	3.250	4.999	5.004	.468	47
*475025	S	3.375	4.999	5.004	.468	47
*475027	S	3.500	4.999	5.004	.468	47
*475029	S	3.625	4.999	5.004	.468	47
*475031	S	3.750	4.999	5.004	.468	47
*475031V	V	3.750	4.999	5.004	.468	47
*475033	S	3.875	4.999	5.004	.468	47
*475035	S	4.000	4.999	5.004	.468	47
*475035H	H	4.000	4.999	5.004	.468	47
*475036	S	4.000	5.501	5.506	.562	47
*475040	S	4.250	5.501	5.506	.562	47
*475041	S	4.000	5.751	5.756	.562	47
*475045	S	4.250	5.751	5.756	.562	47
*475047	S	4.375	5.751	5.756	.562	47
*475049	S	4.500	5.751	5.756	.562	47
*475053	S	4.750	5.751	5.756	.562	47
*475054	S	4.000	6.250	6.256	.562	47
*475058	S	4.250	6.250	6.256	.562	47
*475060	S	4.375	6.250	6.256	.562	47
*475062	S	4.500	6.250	6.256	.562	47
*475064	S	4.625	6.250	6.256	.562	47
*475066	S	4.750	6.250	6.256	.562	47
*475068	S	4.875	6.250	6.256	.562	47
*475070	S	5.000	6.250	6.256	.562	47
*475070N	N	5.000	6.250	6.256	.562	47
*475072	S	6.000	7.501	7.508	.562	47
*475079	S	2.500	3.751	3.756	.500	47
475080N	N	2.125	3.623	3.628	.468	47
*475082	S	2.500	3.876	3.881	.468	47
*475084	S	7.000	8.500	8.509	.750	47
*475085	S	3.312	4.499	4.504	.468	47
*475086N	N	3.000	4.249	4.254	.468	47
*475088	S	3.000	4.499	4.504	.468	47
*475088N	N	3.000	4.499	4.504	.468	47
*475091	S	4.875	5.999	6.007	.625	47
*475093	S	2.250	3.500	3.505	.500	47
*475095	S	2.375	3.500	3.505	.500	47
475095N	N	2.375	3.500	3.505	.500	47
*475096	S	2.437	3.500	3.505	.500	47
*475098	S	2.562	3.500	3.505	.500	47
*475137	S	3.250	4.499	4.504	.468	47
*475137N	N	3.250	4.499	4.504	.468	47
*475138	S	4.750	5.750	5.756	.500	47
*475138H	H	4.750	5.750	5.756	.500	47
*475139N	N	2.750	4.626	4.631	.625	47
*475144	S	2.875	4.499	4.504	.468	47
*475145	S	3.125	4.499	4.504	.468	47
*475146	S	3.500	4.499	4.504	.468	47
*475146N	N	3.500	4.499	4.504	.468	47
*475147	S	2.500	3.500	3.505	.500	47
*475147N	N	2.500	3.500	3.505	.500	47
*475148	S	3.875	5.251	5.256	.468	47
*475149	S	2.625	3.751	3.756	.500	47
*475149N	N	2.625	3.751	3.756	.500	47
*475150	S	3.750	5.251	5.256	.468	47
*475152	S	2.875	4.125	4.130	.562	47
*475154	S	3.000	4.125	4.130	.562	47
*475156	S	3.125	4.125	4.130	.562	47
*475156H	H	3.125	4.125	4.130	.562	47

470000 SERIES (cont.)

Part No.	Lip Mat'l	Shaft Size	Hsg. Bore	Seal O.D.	Seal Width	Type/ Illus.
*475156N	N	3.125	4.125	4.130	.562	47
*475165	S	3.375	4.499	4.504	.468	47
*475173	S	3.500	4.751	4.756	.625	47
*475175	S	3.625	4.751	4.756	.625	47
*475177	S	3.750	4.751	4.756	.625	47
*475179	S	3.875	4.751	4.756	.625	47
*475192	S	4.000	5.251	5.256	.468	47
*475192N	N	4.000	5.251	5.256	.468	47
*475195	S	4.250	5.251	5.256	.468	47
*475195N	N	4.250	5.251	5.256	.468	47
*475196	S	4.250	5.375	5.381	.500	47
*475198	S	4.375	5.501	5.506	.562	47
*475200	S	4.500	5.501	5.506	.562	47
*475201	S	4.000	5.999	6.007	.625	47
*475205	S	4.250	5.999	6.007	.625	47
*475207	S	4.375	5.999	6.007	.625	47
*475209	S	4.500	5.999	6.007	.625	47
*475211	S	4.625	5.999	6.007	.625	47
*475213	S	4.750	5.999	6.007	.625	47
*475234	S	2.250	3.623	3.628	.468	47
475234N	N	2.250	3.623	3.628	.468	47
*475245	S	3.125	4.751	4.756	.625	47
*475245H	H	3.125	4.751	4.756	.625	47
*475252V	V	4.000	5.122	5.131	.378	47
*475254	S	2.250	4.003	4.008	.468	47
*475259	S	2.250	3.751	3.756	.500	47
*475262	S	3.500	5.501	5.506	.562	47
*475265	S	3.250	4.751	4.756	.625	47
*475271	S	5.000	5.999	6.007	.625	47
*475272	S	2.750	4.003	4.008	.468	47
*475272N	N	2.750	4.003	4.008	.468	47
*475281	S	3.000	3.751	3.756	.500	47
*475281N	N	3.000	3.751	3.756	.500	47
*475296	S	2.625	4.003	4.008	.468	47
*475303	S	2.875	3.623	3.628	.375	47
*475304	S	3.250	4.249	4.254	.500	47
*475304V	V	3.250	4.249	4.254	.500	47
*475315	S	2.750	3.623	3.628	.468	47
*475319N	N	3.500	5.126	5.131	.625	47
*475322	S	2.750	3.543	3.548	.500	47
475322N	N	2.750	3.543	3.548	.500	47
*475328	S	3.250	5.251	5.256	.468	47
*475348N	N	2.937	4.249	4.254	.625	47
*475350	S	2.187	3.623	3.628	.468	47
*475354	S	3.125	4.003	4.008	.468	47
*475354H	H	3.125	4.003	4.008	.468	47
*475355	S	2.875	3.876	3.881	.468	47
*475364	S	2.750	3.500	3.505	.500	47
*475368	S	2.625	3.500	3.505	.500	47
475368N	N	2.625	3.500	3.505	.500	47
*475369	S	2.500	3.623	3.628	.468	47
*475369N	N	2.500	3.623	3.628	.468	47
*475371	S	4.625	5.751	5.756	.562	47
*475379	S	3.750	4.751	4.756	.500	47
*475379N	N	3.750	4.751	4.756	.500	47
*475380	S	2.375	3.623	3.628	.468	47
475380N	N	2.375	3.623	3.628	.468	47
475384	**S**	**2.812**	**4.003**	**4.008**	**.468**	**47**
*475389	S	3.625	4.499	4.504	.468	47
*475389N	N	3.625	4.499	4.504	.468	47
*475394	S	3.125	5.251	5.256	.468	47
*475396	S	3.500	5.751	5.756	.562	47
*475423	S	3.750	5.501	5.506	.562	47
*475436	S	3.625	5.751	5.756	.562	47
*475437	S	3.500	4.750	4.756	.500	47
*475449	S	2.500	3.500	3.505	.375	47
475458	S	2.625	3.623	3.628	.375	47
*475458V	V	2.625	3.623	3.628	.375	47

For Illustration and Material Data See Technical Section

* The U.S. customer service number is 877-4-TIMKEN. The Canadian customer service numbers are 800-565-4927 (English) and 800-565-0438 (French-Canadian).

470000 SERIES (cont.)

Part No.	Lip Mat'l	Shaft Size	Hsg. Bore	Seal O.D.	Seal Width	Type/ Illus.
*475479	S	3.000	3.876	3.881	.468	47
*475479H	H	3.000	3.876	3.881	.468	47
*475479N	N	3.000	3.876	3.881	.468	47
*475483	S	2.625	3.500	3.505	.375	47
475500	S	3.298	4.125	4.130	.562	47
*475559	S	3.500	5.251	5.256	.468	47
*475563	S	3.250	4.003	4.008	.468	47
*475566	S	3.250	4.125	4.130	.562	47
*475568	S	3.125	3.876	3.881	.468	47
*475613	S	3.375	4.249	4.254	.625	47
*475636	S	2.187	3.500	3.505	.500	47
*475638	S	5.500	6.750	6.757	.500	47
*475645	S	5.250	6.500	6.507	.562	47
*475655	S	2.500	4.003	4.008	.468	47
*475659	S	2.125	3.500	3.505	.500	47
*475697	S	3.875	5.125	5.131	.500	47
*475725	S	5.000	5.999	6.007	.500	47
*475725N	N	5.000	5.999	6.007	.500	47
*475733	S	2.750	3.751	3.756	.437	47
*475836	S	3.000	4.003	4.008	.437	47
*475836V	V	3.000	4.003	4.008	.437	47
475845	S	4.000	4.999	5.004	.375	47
*475852	S	3.750	5.751	5.756	.562	47
*475894	S	3.375	4.376	4.381	.500	47
*475937	S	3.625	4.751	4.756	.500	47
*475937H	H	3.625	4.751	4.756	.500	47
*475953	S	4.000	4.999	5.004	.500	47
*475953H	H	4.000	4.999	5.004	.500	47
*475960	S	2.750	3.876	3.881	.375	47
*475984	S	2.750	3.623	3.628	.375	47
*475984N	N	2.750	3.623	3.628	.375	47
*475991N	N	3.500	4.501	4.506	.468	47
*475995	S	3.000	4.003	4.008	.375	47
*475995V	V	3.000	4.003	4.008	.375	47
*475996H	H	3.375	4.280	4.285	.406	47
*476011	S	3.125	4.125	4.130	.500	47
*476011H	H	3.125	4.125	4.130	.500	47
*476011V	V	3.125	4.125	4.130	.500	47
476023N	N	3.000	3.751	3.756	.375	47
*476023V	V	3.000	3.751	3.756	.375	47
476028	S	3.375	4.249	4.254	.468	47
*476028N	N	3.375	4.249	4.254	.468	47
*476041	S	3.750	4.626	4.632	.500	47
*476043	S	3.875	5.751	5.756	.562	47
*476047	S	3.625	4.625	4.631	.500	47
*476098N	N	3.875	4.686	4.691	.375	47
*476107	S	5.500	6.750	6.757	.575	47
*476122H	H	4.750	5.999	6.006	.562	47
*476124	S	3.687	4.626	4.631	.625	47
*476125	S	3.625	4.999	5.004	.500	47
*476128	S	3.875	5.501	5.506	.562	47
*476130	S	4.000	5.375	5.381	.500	47
*476135	S	4.250	5.625	5.631	.500	47
*476149N	N	4.375	5.999	6.007	.500	47
*476153	S	4.500	5.625	5.631	.500	47
*476154	S	4.500	5.999	6.007	.500	47
*476158	S	4.625	5.999	6.007	.500	47
*476163	S	4.812	5.999	6.007	.500	47
*476173	S	5.125	6.250	6.256	.562	47
*476173V	V	5.125	6.250	6.256	.562	47
*476262	S	11.000	12.500	12.514	1.250	47
*476262N	N	11.000	12.500	12.514	1.250	47
*476267	S	2.125	3.500	3.505	.375	47
*476268	S	2.187	3.500	3.505	.375	47
*476271	S	2.375	3.500	3.505	.375	47
*476272	S	2.437	3.623	3.628	.468	47
*476273	S	2.500	3.623	3.628	.375	47
476281	S	2.750	4.125	4.130	.562	47

470000 SERIES (cont.)

Part No.	Lip Mat'l	Shaft Size	Hsg. Bore	Seal O.D.	Seal Width	Type/ Illus.
*476281N	N	2.750	4.125	4.130	.562	47
*476282	S	2.750	4.249	4.254	.468	47
*476283	S	2.750	4.249	4.254	.500	47
476283N	N	2.750	4.249	4.254	.500	47
*476286	S	2.875	4.249	4.254	.625	47
*476288	S	3.125	4.249	4.254	.500	47
*476294	S	3.375	4.249	4.254	.500	47
*476297	S	3.125	4.626	4.631	.437	47
*476303	S	3.250	4.626	4.631	.437	47
*476319	S	3.375	4.626	4.631	.437	47
*476323	S	3.375	4.751	4.756	.625	47
*476327	S	3.375	5.251	5.256	.468	47
*476328	S	3.500	4.626	4.631	.437	47
*476332	S	3.625	4.626	4.631	.437	47
*476332H	H	3.625	4.626	4.631	.437	47
*476332N	N	3.625	4.626	4.631	.437	47
*476335	S	3.625	5.251	5.256	.468	47
*476336	S	3.750	4.626	4.631	.437	47
*476339	S	3.750	4.999	5.004	.500	47
*476341	S	3.875	4.626	4.631	.437	47
*476345	S	3.875	4.999	5.004	.500	47
*476365	S	3.437	4.501	4.506	.468	47
*476370	S	3.000	4.751	4.756	.625	47
*476380	S	4.375	5.500	5.506	.500	47
*476389	S	3.625	5.501	5.506	.562	47
*476404	S	3.125	4.003	4.008	.375	47
*476404N	N	3.125	4.003	4.008	.375	47
*476414	S	3.500	4.500	4.506	.500	47
476424N	N	3.500	4.751	4.756	.375	47
476470	**S**	**3.250**	**4.249**	**4.254**	**.375**	**47**
476470V	V	3.250	4.247	4.254	.375	47
*476470N	N	3.250	4.249	4.254	.375	47
*476500	S	2.937	3.937	3.942	.500	47
476500N	N	2.937	3.937	3.942	.500	47
476509	S	1.937	3.623	3.628	.468	47
476510	S	1.562	3.543	3.548	.375	47
476511	S	2.187	5.118	5.124	.375	47
476512★	S	*50,00*	*110,00*	*110,13*	*9,50*	47
		1.969	4.331	4.336	.374	
*476513	S	2.162	3.543	3.548	.375	47
476514	**S**	**2.556**	**3.937**	**3.942**	**.375**	**47**
*476515	S	2.950	4.527	4.533	.375	47
*476516★	S	*85,00*	*130,00*	*130,15*	*12,70*	47
		3.346	5.118	5.124	.500	
476517	S	3.934	5.905	5.911	.500	47
476518★	S	*110,00*	*170,00*	*170,18*	*12,70*	47
		4.331	6.693	6.700	.500	
*476519	S	5.062	7.874	7.881	.500	47
476535	S	2.125	3.149	3.154	.375	47
*476535N	N	2.125	3.149	3.154	.375	47
*476556	S	4.250	5.250	5.256	.500	47
476574N	N	2.750	3.937	3.942	.500	47
*476591N	N	3.562	4.626	4.631	.562	47
*476621H	H	4.875	6.000	6.006	.562	47
*476624	S	3.500	4.376	4.381	.500	47
*476624V	V	3.500	4.376	4.381	.500	47
*476654N	N	2.937	4.003	4.008	.375	47
*476664	S	2.750	3.500	3.505	.375	47
*476666	S	5.750	7.001	7.008	.562	47
*476677★	S	*40,00*	*55,00*	*55,09*	*8,00*	47
		1.575	2.165	2.169	.315	
*476706N	N	2.750	4.003	4.008	.375	47
*476801H	H	5.000	6.003	6.009	.500	47
*476808	S	2.125	3.937	3.942	.375	47
*476816	S	4.000	6.375	6.382	.500	47
476820	S	1.750	3.937	3.942	.312	47
476838	**S**	**1.125**	**1.828**	**1.832**	**.312**	**47**
476842	**S**	**5.500**	**6.250**	**6.257**	**.500**	**47**

For Illustration and Material Data See Technical Section

* The U.S. customer service number is 877-4-TIMKEN. The Canadian customer service numbers are 800-565-4927 (English) and 800-565-0438 (French-Canadian). ★ Metric Seal

470000 SERIES (cont.)

Part No.	Lip Mat'l	Shaft Size	Hsg. Bore	Seal O.D.	Seal Width	Type/ Illus.
*476865	S	5.000	6.250	6.256	.500	47
*476871	S	6.750	7.657	7.750	.500	47
*476878	S	1.625	3.937	3.942	.375	47
*476888	S	4.500	5.500	5.506	.500	47
*476888V	V	4.500	5.500	5.506	.500	47
*476891	S	4.250	5.500	5.506	.500	47
*476892	S	4.500	5.750	5.756	.500	47
*476921	S	2.875	4.003	4.008	.375	47
*476985	S	3.875	4.750	4.756	.375	47
477055	S	3.330	4.125	4.130	.562	47
477069	**S**	**2.598**	**4.000**	**4.005**	**.500**	**47**
*477104	S	1.625	3.543	3.548	.375	47
477105	S	1.875	4.331	4.336	.500	47
*477123	S	4.000	6.312	6.318	.500	47
*477158	S	2.875	3.876	3.881	.375	47
*477158V	V	2.875	3.876	3.881	.375	47
477163N	N	3.000	4.501	4.506	.468	47
*477171	S	3.125	4.375	4.381	.500	47
*477172	S	3.125	4.500	4.506	.500	47
*477181	S	3.250	4.376	4.381	.500	47
*477191	S	3.375	4.500	4.506	.500	47
*477196	S	3.500	4.625	4.631	.500	47
*477205	S	3.750	4.875	4.881	.500	47
*477211	S	3.875	4.875	4.881	.500	47
*477247	S	4.750	6.001	6.007	.500	47
*477254	S	5.500	6.500	6.507	.562	47
*477262	S	5.250	6.250	6.256	.500	47
*477278	S	5.000	6.375	6.381	.500	47
*477316	S	2.750	3.751	3.756	.375	47
*477316H	H	2.750	3.751	3.756	.375	47
*477340	S	1.500	3.543	3.548	.375	47
*477343	S	2.625	3.751	3.756	.375	47
*477344	S	2.875	3.751	3.756	.375	47
*477344V	V	2.875	3.751	3.756	.375	47
*477349	S	3.000	3.751	3.756	.437	47
*477350	S	3.000	3.876	3.881	.437	47
*477351	S	3.000	4.125	4.130	.437	47
*477352	S	3.250	4.500	4.506	.500	47
*477353	S	3.250	4.626	4.632	.500	47
*477354	S	3.375	4.626	4.632	.500	47
*477355	S	3.625	4.875	4.881	.500	47
*477356	S	4.000	5.125	5.131	.500	47
*477357	S	4.000	5.250	5.256	.500	47
*477358	S	5.250	6.375	6.381	.500	47
*477359	S	5.250	6.625	6.632	.562	47
*477360	S	5.500	6.625	6.632	.562	47
*477361	S	5.500	6.875	6.882	.562	47
*477362	S	5.750	6.750	6.757	.575	47
*477363	S	5.750	6.875	6.882	.562	47
*477364	S	5.750	7.125	7.132	.562	47
*477365	S	6.000	7.125	7.132	.562	47
*477366	S	3.875	5.250	5.256	.500	47
*477410	S	1.961	3.543	3.548	.375	47
*477437	S	3.500	4.500	4.506	.375	47
*477439	S	4.500	5.501	5.507	.380	47
*477586V	V	2.625	4.376	4.381	.500	47
*477599	S	3.500	4.376	4.381	.375	47
*477609	S	1.875	3.500	3.505	.500	47
*477673V	V	1.968	4.003	4.008	.437	47
*477674V★	V	*54,99*	*101,68*	*101,80*	*11,10*	47
		2.165	4.003	4.008	.437	
*477936H★	H	*70,00*	*92,00*	*92,15*	*11,90*	47
		2.756	3.622	3.628	.469	

480000 SERIES

Part No.	Lip Mat'l	Shaft Size	Hsg. Bore	Seal O.D.	Seal Width	Type/ Illus.
*480005	S	.500	1.124	1.128	.375	48
*480007	S	.562	1.124	1.128	.375	48
*480009	S	.625	1.124	1.128	.375	48

480000 SERIES (cont.)

Part No.	Lip Mat'l	Shaft Size	Hsg. Bore	Seal O.D.	Seal Width	Type/ Illus.
*480014	S	.500	1.250	1.254	.375	48
*480016	S	.562	1.250	1.254	.375	48
*480016N	N	.562	1.250	1.254	.375	48
*480018	S	.625	1.250	1.254	.375	48
*480019	S	.500	1.375	1.379	.406	48
*480021	S	.562	1.375	1.379	.406	48
*480023	S	.625	1.375	1.379	.406	48
*480025	S	.687	1.375	1.379	.406	48
*480027	S	.750	1.375	1.379	.406	48
*480027H	H	.750	1.375	1.379	.406	48
*480028	S	.750	1.499	1.503	.390	48
*480030	S	.812	1.499	1.503	.390	48
*480032	S	.875	1.499	1.503	.390	48
*480033	S	.750	1.828	1.832	.437	48
*480035	S	.812	1.828	1.832	.437	48
*480037	S	.875	1.828	1.832	.437	48
*480039	S	.937	1.828	1.832	.437	48
*480040	S	.968	1.828	1.832	.437	48
*480041	S	1.000	1.828	1.832	.437	48
*480043	S	1.062	1.828	1.832	.437	48
*480045	S	1.125	1.828	1.832	.437	48
*480047	S	1.187	1.983	1.987	.437	48
*480049	S	1.250	1.983	1.987	.437	48
*480052	S	1.187	2.062	2.066	.437	48
*480053	S	1.312	2.374	2.378	.500	48
480055	S	1.375	2.374	2.378	.500	48
*480057	S	1.437	2.374	2.378	.500	48
*480058	S	1.468	2.374	2.378	.500	48
*480058N	N	1.468	2.374	2.378	.500	48
*480059	S	1.500	2.374	2.378	.500	48
*480059N	N	1.500	2.374	2.378	.500	48
*480061	S	1.375	2.437	2.441	.468	48
*480061N	N	1.375	2.437	2.441	.468	48
*480062	S	1.437	2.437	2.441	.468	48
*480063	S	1.500	2.437	2.441	.468	48
*480064	S	1.562	2.437	2.441	.468	48
*480066	S	1.625	2.437	2.441	.468	48
*480067	S	1.500	2.502	2.506	.500	48
*480069	S	1.625	2.623	2.627	.500	48
*480070	S	1.750	2.623	2.627	.500	48
*480070N	N	1.750	2.623	2.627	.500	48
*480071	S	1.875	2.623	2.627	.500	48
*480071V	V	1.875	2.623	2.627	.500	48
*480072	S	1.625	2.686	2.690	.500	48
*480073	S	1.656	2.686	2.690	.500	48
*480074	S	1.687	2.686	2.690	.500	48
*480076	S	1.750	2.686	2.690	.500	48
*480076N	N	1.750	2.686	2.690	.500	48
*480077	S	1.500	2.758	2.762	.500	48
*480078	S	1.625	2.875	2.879	.468	48
*480080	S	1.687	2.875	2.879	.468	48
*480082	S	1.875	2.875	2.879	.468	48
*480083	S	2.000	2.875	2.879	.468	48
*480084	S	1.875	2.996	3.001	.500	48
*480085	S	2.000	2.996	3.001	.500	48
*480086	S	1.687	3.062	3.066	.500	48
*480087	S	1.750	3.061	3.066	.500	48
*480088	S	1.750	3.189	3.194	.437	48
*480089	S	1.781	3.189	3.194	.437	48
*480090	S	1.812	3.189	3.194	.437	48
*480092	S	1.875	3.189	3.194	.437	48
*480094	S	1.937	3.189	3.194	.437	48
*480095	S	2.000	3.189	3.194	.437	48
*480096	S	2.062	3.189	3.194	.437	48
*480097	S	2.125	3.350	3.355	.468	48
*480098	S	2.187	3.350	3.355	.468	48
*480099	S	2.250	3.350	3.355	.468	48
*480101	S	2.375	3.350	3.355	.468	48

For Illustration and Material Data See Technical Section

* The U.S. customer service number is 877-4-TIMKEN. The Canadian customer service numbers are 800-565-4927 (English) and 800-565-0438 (French-Canadian). ★ Metric Seal

480000 SERIES (cont.)

Part No.	Lip Mat'l	Shaft Size	Hsg. Bore	Seal O.D.	Seal Width	Type/ Illus.
*480101H	H	2.375	3.350	3.355	.468	48
*480101N	N	2.375	3.350	3.355	.468	48
*480102	S	2.000	3.371	3.376	.468	48
*480109	S	1.562	2.750	2.754	.500	48
*480115	S	2.125	2.996	3.001	.500	48
*480116	S	1.812	2.875	2.879	.468	48
*480117	S	1.875	2.750	2.754	.500	48
*480118	S	1.812	2.750	2.754	.500	48
*480119	S	.500	.999	1.003	.375	48
*480120	S	1.000	1.499	1.503	.390	48
*480121	S	2.125	3.189	3.194	.437	48
*480122	S	1.437	2.623	2.627	.500	48
*480127	S	1.062	1.874	1.878	.437	48
*480127N	N	1.062	1.874	1.878	.437	48
*480129	S	1.312	2.062	2.066	.437	48
*480132	S	2.250	3.371	3.376	.468	48
*480132N	N	2.250	3.371	3.376	.468	48
*480135	S	1.375	2.125	2.129	.437	48
*480136	S	1.500	2.250	2.254	.500	48
*480137	S	.687	1.124	1.128	.375	48
*480138	S	1.937	2.686	2.690	.500	48
*480138H	H	1.937	2.686	2.690	.500	48
*480139	S	2.187	2.996	3.001	.500	48
*480140N	N	1.250	1.752	1.756	.437	48
*480141	S	.750	1.250	1.254	.375	48
*480141H	H	.750	1.250	1.254	.375	48
*480143	S	1.562	2.561	2.565	.500	48
*480144	S	1.437	2.502	2.506	.500	48
*480144V	V	1.437	2.502	2.506	.500	48
*480145	S	1.937	2.996	3.001	.500	48
*480152	S	1.187	2.125	2.129	.437	48
*480154	S	1.687	2.502	2.506	.500	48
*480155	S	1.750	2.758	2.762	.500	48
*480157	S	1.000	2.000	2.004	.437	48
*480158	S	1.062	2.000	2.004	.437	48
*480160	S	1.125	2.000	2.004	.437	48
*480161	S	1.156	2.000	2.004	.437	48
*480162	S	1.187	2.000	2.004	.437	48
*480163	S	1.250	2.000	2.004	.437	48
*480165	S	1.250	2.250	2.254	.500	48
*480167	S	1.312	2.250	2.254	.500	48
*480169	S	1.375	2.250	2.254	.500	48
*480171	S	1.437	2.250	2.254	.500	48
*480182	S	1.125	1.983	1.987	.437	48
*480183	S	1.750	2.750	2.754	.500	48
*480183H	H	1.750	2.750	2.754	.500	48
*480184	S	.937	1.499	1.503	.390	48
*480185	S	1.562	2.502	2.506	.500	48
*480186	S	1.687	2.750	2.754	.500	48
*480187	S	1.000	2.062	2.066	.437	48
*480188	S	1.062	1.561	1.565	.375	48
*480189	S	1.125	1.752	1.756	.437	48
*480189H	H	1.125	1.752	1.756	.437	48
*480190	S	1.500	2.561	2.565	.500	48
*480193	S	1.812	2.996	3.001	.500	48
*480194	S	1.625	2.502	2.506	.500	48
*480202	S	.562	.999	1.003	.375	48
*480204	S	.812	1.375	1.379	.406	48
*480205	S	.687	1.499	1.503	.390	48
*480208	S	.968	1.499	1.503	.390	48
480210	**S**	**1.062**	**1.499**	**1.503**	**.312**	**48**
*480210H	H	1.062	1.499	1.503	.312	48
*480211	S	.750	1.624	1.628	.437	48
*480213	S	.812	1.624	1.628	.437	48
*480215	S	.875	1.624	1.628	.437	48
*480217	S	.937	1.624	1.628	.437	48
*480219	S	1.000	1.624	1.628	.437	48
*480221	S	1.062	1.624	1.628	.437	48

480000 SERIES (cont.)

Part No.	Lip Mat'l	Shaft Size	Hsg. Bore	Seal O.D.	Seal Width	Type/ Illus.
*480222	S	.750	1.752	1.756	.437	48
*480224	S	.812	1.752	1.756	.437	48
*480226	S	.875	1.752	1.756	.437	48
*480228	S	.937	1.752	1.756	.437	48
*480230	S	1.000	1.752	1.756	.437	48
*480232	S	1.062	1.752	1.756	.437	48
*480233	S	1.000	1.874	1.878	.437	48
*480235H	H	1.093	1.874	1.878	.437	48
*480235V	V	1.093	1.874	1.878	.437	48
*480236	S	1.125	1.874	1.878	.437	48
*480241	S	1.125	2.062	2.066	.437	48
*480244	S	1.250	2.062	2.066	.437	48
*480245	S	1.250	2.125	2.129	.437	48
*480247	S	1.312	2.125	2.129	.437	48
*480248	S	1.343	2.125	2.129	.437	48
*480261	S	2.062	2.996	3.001	.500	48
*480262	S	1.562	2.623	2.627	.500	48
*480265	S	1.687	2.623	2.627	.500	48
*480267	S	1.812	2.623	2.627	.500	48
*480267N	N	1.812	2.623	2.627	.500	48
*480268	S	1.843	2.623	2.627	.500	48
*480268N	N	1.843	2.623	2.627	.500	48
*480269	S	1.781	2.686	2.690	.500	48
*480270	S	1.812	2.686	2.690	.500	48
*480272	S	1.875	2.686	2.690	.500	48
*480273	S	1.562	2.758	2.762	.500	48
*480273N	N	1.562	2.758	2.762	.500	48
*480275	S	1.625	2.758	2.762	.500	48
480281	S	1.812	2.758	2.762	.500	48
*480283	S	1.875	2.758	2.762	.500	48
*480283H	H	1.875	2.758	2.762	.500	48
*480286	S	1.625	2.750	2.754	.500	48
*480291	S	1.750	2.875	2.879	.468	48
*480295	S	1.937	2.875	2.879	.468	48
*480298	S	1.875	3.000	3.005	.500	48
*480300	S	1.937	3.000	3.005	.500	48
*480301	S	2.000	3.000	3.005	.500	48
*480301H	H	2.000	3.000	3.005	.500	48
*480302	S	2.062	3.000	3.005	.500	48
480303	S	2.125	3.000	3.005	.500	48
*480303V	V	2.125	3.000	3.005	.500	48
*480304	S	1.875	3.061	3.066	.500	48
*480306	S	1.937	3.061	3.066	.500	48
*480307	S	2.062	3.061	3.066	.500	48
*480308	S	2.125	3.061	3.066	.500	48
*480309	S	1.937	3.125	3.130	.500	48
*480310	S	2.000	3.125	3.130	.500	48
*480311	S	2.062	3.125	3.130	.500	48
*480312	S	2.125	3.125	3.130	.500	48
*480312N	N	2.125	3.125	3.130	.500	48
*480313	S	2.062	3.251	3.256	.500	48
*480314	S	2.125	3.251	3.256	.500	48
*480315	S	2.187	3.251	3.256	.500	48
*480316	S	2.250	3.251	3.256	.500	48
*480316N	S	2.250	3.251	3.256	.500	48
*480320	S	2.375	3.189	3.194	.437	48
*480326	S	1.500	2.996	3.001	.500	48
*480328	S	1.187	1.686	1.690	.375	48
*480329	S	2.625	3.350	3.356	.468	48
*480329N	N	2.625	3.350	3.356	.468	48
*480330	S	2.500	3.371	3.376	.468	48
*480331N	N	1.843	2.750	2.754	.500	48
*480336	S	1.187	2.250	2.254	.500	48
*480340	S	.750	1.561	1.565	.375	48
*480342	S	1.062	1.983	1.987	.437	48
*480343	S	2.062	3.371	3.376	.468	48
*480344	S	1.187	1.828	1.832	.437	48
*480350	S	2.375	3.371	3.376	.468	48

For Illustration and Material Data See Technical Section

* The U.S. customer service number is 877-4-TIMKEN. The Canadian customer service numbers are 800-565-4927 (English) and 800-565-0438 (French-Canadian).

480000 SERIES (cont.)

Part No.	Lip Mat'l	Shaft Size	Hsg. Bore	Seal O.D.	Seal Width	Type/ Illus.
*480351	S	1.750	2.437	2.441	.468	48
*480351H	H	1.750	2.437	2.441	.468	48
*480352	S	1.750	2.502	2.506	.500	48
*480354	S	2.187	3.189	3.194	.437	48
*480355	S	.687	1.250	1.254	.375	48
480356	S	1.250	1.686	1.690	.375	48
*480356V	V	1.250	1.686	1.690	.375	48
*480358	S	1.625	2.374	2.378	.500	48
*480359	S	1.750	2.996	3.001	.500	48
*480360	S	2.000	2.686	2.690	.500	48
*480361	S	1.750	2.561	2.565	.500	48
*480363	S	1.687	2.502	2.506	.375	48
*480365	S	2.125	2.875	2.879	.468	48
*480373	S	2.062	2.875	2.879	.468	48
*480375	S	1.763	2.412	2.416	.468	48
*480380	S	1.500	2.374	2.378	.312	48
*480381	S	1.125	1.624	1.628	.437	48
*480389	S	2.000	2.750	2.754	.500	48
*480390	S	.750	1.874	1.878	.250	48
*480394	S	1.500	2.125	2.129	.437	48
*480403	S	1.375	2.062	2.066	.437	48
*480403H	H	1.375	2.062	2.066	.437	48
*480403N	N	1.375	2.062	2.066	.437	48
*480403V	V	1.375	2.062	2.066	.437	48
*480410	S	2.000	2.623	2.627	.500	48
*480410N	N	2.000	2.623	2.627	.500	48
*480415	S	1.625	2.996	3.001	.500	48
*480418	S	1.562	2.875	2.879	.468	48
*480424	S	.875	1.874	1.878	.437	48
*480424N	N	.875	1.874	1.878	.437	48
*480433	S	2.250	3.125	3.130	.500	48
*480436	S	2.000	2.750	2.754	.375	48
*480438	S	1.562	2.374	2.378	.500	48
*480438N	N	1.562	2.374	2.378	.500	48
*480441	S	2.250	2.996	3.001	.500	48
*480444	S	1.375	2.502	2.506	.500	48
*480449	S	1.000	1.561	1.565	.375	48
*480449N	N	1.000	1.561	1.566	.375	48
*480451	S	1.500	2.062	2.066	.437	48
*480452	S	1.375	2.835	2.839	.468	48
*480452H	H	1.375	2.835	2.839	.468	48
*480452N	N	1.375	2.835	2.839	.468	48
*480453	S	1.437	2.125	2.129	.437	48
*480453N	N	1.437	2.125	2.129	.437	48
*480455	S	1.937	2.623	2.627	.500	48
*480461	S	1.500	2.750	2.754	.500	48
*480463	S	1.375	2.750	2.754	.500	48
*480479	S	1.687	2.437	2.441	.468	48
480479H	H	1.687	2.437	2.441	.468	48
*480479V	V	1.687	2.437	2.441	.468	48
*480481	S	1.250	2.437	2.441	.468	48
*480482	S	1.156	1.828	1.832	.437	48
*480487	S	1.500	2.686	2.690	.500	48
*480489	S	2.187	2.875	2.879	.468	48
480491	S	2.750	3.481	3.486	.500	48
*480494	S	1.750	2.502	2.506	.375	48
*480494N	N	1.750	2.502	2.506	.375	48
*480496	S	2.500	3.350	3.355	.468	48
*480496N	N	2.500	3.350	3.355	.468	48
*480502	S	1.156	1.686	1.690	.375	48
*480503	S	1.312	2.437	2.441	.468	48
*480504	S	1.375	2.623	2.627	.500	48
*480515	S	.812	1.561	1.565	.375	48
*480519	S	2.500	3.251	3.256	.500	48
*480519N	N	2.500	3.251	3.256	.500	48
*480519V	V	2.500	3.251	3.256	.500	48
*480520	S	2.250	3.000	3.005	.500	48
*480521	S	1.312	1.874	1.878	.437	48

480000 SERIES (cont.)

Part No.	Lip Mat'l	Shaft Size	Hsg. Bore	Seal O.D.	Seal Width	Type/ Illus.
*480522	S	1.375	2.000	2.004	.437	48
*480523	S	1.500	2.875	2.879	.468	48
*480524	S	1.875	3.371	3.376	.468	48
*480535	S	.625	1.246	1.250	.375	48
*480536	S	.562	1.246	1.250	.375	48
*480539	S	1.625	3.000	3.005	.500	48
*480541	S	1.000	1.752	1.756	.375	48
*480550	S	1.937	2.562	2.567	.317	48
*480552	S	2.375	3.125	3.130	.500	48
*480553	S	1.000	1.499	1.503	.312	48
*480553H	H	1.000	1.499	1.503	.312	48
*480559	S	1.250	2.374	2.378	.500	48
*480561	S	1.312	2.000	2.004	.375	48
*480565	S	2.375	3.125	3.130	.375	48
*480567	S	.875	1.375	1.379	.312	48
*480567N	N	.875	1.375	1.379	.312	48
480570	S	1.375	2.000	2.004	.328	48
*480571	S	2.000	3.251	3.256	.500	48
*480574	S	2.375	3.251	3.256	.500	48
480574H	H	2.375	3.252	3.256	.500	48
480581	**S**	**1.594**	**2.125**	**2.129**	**.250**	**48**
*480590	S	.875	1.752	1.756	.250	48
*480591	S	.812	1.874	1.878	.437	48
*480596	S	1.687	2.835	2.839	.468	48
*480601	S	.781	1.250	1.254	.250	48
*480604	S	1.125	2.250	2.254	.500	48
*480605	S	2.500	3.371	3.376	.375	48
*480610	S	.750	1.874	1.878	.437	48
*480625	S	1.500	2.250	2.254	.312	48
480625V	V	1.500	2.250	2.254	.312	48
*480626	S	2.625	3.371	3.376	.468	48
*480628	S	1.062	2.062	2.066	.437	48
480630	**S**	**1.500**	**2.062**	**2.066**	**.250**	**48**
*480639	S	2.125	2.835	2.839	.468	48
*480652	S	1.250	2.000	2.004	.375	48
*480673	S	.812	1.375	1.379	.250	48
*480680	S	.875	1.499	1.503	.312	48
*480681	S	2.187	3.125	3.130	.500	48
*480682	S	1.562	2.623	2.627	.312	48
*480683	S	1.250	1.874	1.878	.375	48
*480687	S	1.687	3.125	3.130	.500	48
*480712	S	1.125	1.874	1.878	.250	48
*480719	S	1.750	3.000	3.005	.500	48
*480720	S	1.875	3.125	3.130	.500	48
*480737	S	2.250	3.189	3.194	.437	48
*480746	S	1.437	2.686	2.690	.500	48
*480751	S	1.562	2.686	2.690	.500	48
*480755	S	1.625	2.250	2.254	.500	48
*480774	S	1.375	2.062	2.066	.375	48
*480776	S	1.375	2.686	2.690	.500	48
*480791	S	.625	1.124	1.128	.312	48
*480806	S	1.250	2.835	2.839	.468	48
*480808	S	1.437	2.750	2.754	.500	48
*480814	S	1.500	2.441	2.445	.500	48
480821	**S**	**.750**	**1.312**	**1.316**	**.250**	**48**
*480823	S	1.875	2.502	2.506	.500	48
480844	**S**	**1.500**	**2.222**	**2.226**	**.312**	**48**
*480867	S	2.125	2.875	2.879	.437	48
*480867N	N	2.125	2.875	2.879	.437	48
480889	**S**	**.812**	**1.312**	**1.316**	**.250**	**48**
*480889H	H	.812	1.312	1.316	.250	48
*480895	S	.750	1.375	1.379	.312	48
*480898	S	2.125	2.875	2.879	.375	48
*480898H	H	2.125	2.875	2.879	.375	48
*480906	S	1.156	1.983	1.987	.375	48
*480929	S	1.750	2.374	2.378	.500	48
*480950	S	1.375	2.437	2.441	.375	48
*480950N	N	1.375	2.437	2.441	.375	48

For Illustration and Material Data See Technical Section

* The U.S. customer service number is 877-4-TIMKEN. The Canadian customer service numbers are 800-565-4927 (English) and 800-565-0438 (French-Canadian).

480000 SERIES (cont.)

Part No.	Lip Mat'l	Shaft Size	Hsg. Bore	Seal O.D.	Seal Width	Type/ Illus.
480954	S	.750	1.250	1.254	.250	48
*480954N	N	.750	1.250	1.254	.250	48
480954V	V	.750	1.250	1.254	.250	48
*480963	S	1.562	2.437	2.441	.500	48
*480972	S	2.125	3.371	3.376	.468	48
*480975	S	.625	1.499	1.503	.390	48
*480988	S	2.375	3.061	3.066	.500	48
480988H	H	2.375	3.061	3.066	.500	48
480991	S	1.500	2.062	2.066	.375	48
*481000	S	1.375	2.250	2.254	.375	48
*481016	S	1.562	2.125	2.129	.437	48
*481016N	N	1.562	2.125	2.129	.437	48
*481019	S	1.750	2.623	2.627	.375	48
*481024	S	.625	1.624	1.628	.437	48
*481047	S	.937	1.497	1.501	.390	48
*481067	S	1.750	2.875	2.879	.500	48
481073	**S**	**.656**	**1.375**	**1.379**	**.250**	**48**
*481076	S	1.031	1.575	1.579	.312	48
*481078	S	1.875	3.251	3.256	.500	48
*481083	S	1.250	1.752	1.756	.375	48
*481083N	N	1.250	1.752	1.756	.375	48
*481083V	V	1.250	1.752	1.756	.375	48
*481084	S	1.562	2.250	2.254	.500	48
*481091	S	2.000	3.062	3.066	.500	48
*481091H	H	2.000	3.062	3.066	.500	48
*481100	S	1.125	1.624	1.628	.312	48
*481105	S	1.375	2.875	2.879	.468	48
*481122	S	1.750	2.437	2.441	.375	48
*481131	S	1.375	2.374	2.378	.375	48
*481133	S	1.125	1.752	1.756	.375	48
*481134	S	1.250	2.062	2.066	.375	48
*481135	S	1.125	2.062	2.066	.375	48
*481135H	H	1.125	2.062	2.066	.375	48
*481136	S	1.375	2.248	2.252	.375	48
*481137	S	.875	1.828	1.832	.375	48
*481138	S	2.250	3.125	3.130	.375	48
*481138H	H	2.250	3.125	3.130	.375	48
*481138N	N	2.250	3.125	3.130	.375	48
*481139	S	1.875	3.000	3.005	.375	48
*481139H	H	1.875	3.000	3.005	.375	48
*481150	S	1.625	2.374	2.378	.375	48
*481150H	H	1.625	2.374	2.378	.375	48
*481150N	N	1.625	2.374	2.378	.375	48
481163	**S**	**1.500**	**2.000**	**2.004**	**.312**	**48**
481163V	V	1.500	2.000	2.004	.312	48
*481163H	H	1.500	2.000	2.004	.312	48
*481166	S	1.937	2.625	2.629	.375	48
481181	**S**	**1.625**	**2.125**	**2.129**	**.250**	**48**
*481181H	H	1.625	2.125	2.129	.250	48
481181N	N	1.625	2.125	2.129	.250	48
481191V	V	2.254	2.756	2.763	.340	48
*481192	S	1.375	2.125	2.129	.312	48
*481192H	H	1.375	2.125	2.129	.312	48
*481193N	N	1.301	2.000	2.004	.437	48
481195	S	1.937	2.502	2.506	.375	48
*481195N	N	1.937	2.502	2.506	.375	48
*481203N	N	1.250	1.750	1.754	.375	48
481213	**S**	**1.187**	**1.687**	**1.691**	**.250**	**48**
*481224	S	1.000	1.499	1.503	.250	48
*481224H	H	1.000	1.499	1.503	.250	48
481224V	V	1.000	1.499	1.503	.250	48
*481234	S	2.250	3.061	3.066	.500	48
*481239	S	1.000	1.625	1.629	.375	48
*481243	S	1.750	2.412	2.416	.468	48
*481246	S	1.250	1.874	1.878	.437	48
*481255	S	.625	1.375	1.379	.250	48
*481255V	V	.625	1.375	1.379	.250	48
*481258	S	1.125	1.828	1.832	.375	48

480000 SERIES (cont.)

Part No.	Lip Mat'l	Shaft Size	Hsg. Bore	Seal O.D.	Seal Width	Type/ Illus.
*481264	S	.625	1.250	1.254	.250	48
*481267	S	.875	1.375	1.379	.250	48
*481267H	H	.875	1.375	1.379	.250	48
*481267N	N	.875	1.375	1.379	.250	48
*481268	S	1.375	2.000	2.004	.375	48
*481268V	V	1.375	2.000	2.004	.375	48
*481271	S	2.500	3.251	3.256	.375	48
*481272	S	2.250	3.000	3.005	.375	48
*481272N	N	2.250	3.000	3.005	.375	48
*481276	S	1.375	2.441	2.445	.375	48
*481279	S	1.562	2.252	2.256	.375	48
*481279N	N	1.562	2.252	2.256	.375	48
*481281	S	.562	1.124	1.128	.250	48
*481281N	N	.562	1.124	1.128	.250	48
*481281V	V	.562	1.124	1.128	.250	48
*481288	S	1.750	2.374	2.378	.375	48
*481289	S	1.625	2.251	2.256	.375	48
*481294	S	.500	1.124	1.128	.312	48
*481308	S	1.500	2.374	2.378	.375	48
*481315	S	.562	.999	1.003	.250	48
*481315N	N	.562	.999	1.003	.250	48
*481315V	V	.562	.999	1.003	.250	48
*481316	S	1.562	2.686	2.690	.375	48
*481324	S	.625	1.375	1.379	.312	48
*481336	S	2.250	2.873	2.877	.312	48
*481338	S	2.187	3.000	3.005	.500	48
*481343	S	1.062	1.575	1.579	.312	48
*481344	S	1.500	2.441	2.445	.375	48
*481345	S	1.687	2.363	2.367	.437	48
*481345H	H	1.687	2.363	2.367	.437	48
*481345N	N	1.687	2.363	2.367	.437	48
*481354	S	1.187	2.062	2.066	.250	48
*481354N	N	1.187	2.062	2.066	.250	48
*481371H★	H	*50,00*	*70,00*	*70,10*	*11,00*	48
		1.969	2.756	2.760	.433	
*481384	S	1.594	2.125	2.129	.281	48
*481384N	N	1.594	2.125	2.129	.281	48
*481384V	V	1.594	2.125	2.129	.281	48
*481385	S	.750	1.983	1.987	.437	48
481397	**S**	**.656**	**1.575**	**1.579**	**.250**	**48**
*481407	S	1.250	2.441	2.445	.375	48
*481410	S	1.687	2.328	2.332	.437	48
*481413	S	1.250	1.752	1.756	.250	48
*481413V	V	1.250	1.752	1.756	.250	48
*481414	S	3.375	4.376	4.381	.562	48
*481414H	H	3.375	4.376	4.381	.562	48
*481419	S	1.625	2.437	2.441	.375	48
*481419H	H	1.625	2.437	2.441	.375	48
*481424	S	2.000	2.623	2.627	.312	48
*481424H	H	2.000	2.623	2.627	.312	48
*481428	S	.750	1.752	1.756	.375	48
*481436H	H	.656	1.575	1.579	.312	48
*481442	S	.500	.999	1.003	.250	48
*481442N	N	.500	.999	1.003	.250	48
*481442V	V	.500	.999	1.003	.250	48
481443	**S**	**.781**	**1.375**	**1.379**	**.250**	**48**
481443V	V	.781	1.375	1.379	.250	48
*481456	S	1.187	1.874	1.878	.437	48
*481463	S	1.875	2.835	2.839	.468	48
*481466	S	.625	1.124	1.128	.250	48
*481466V	V	.625	1.124	1.128	.250	48
*481472	S	.500	1.250	1.254	.250	48
*481472N	N	.500	1.250	1.254	.250	48
*481475	S	2.625	3.543	3.548	.500	48
481481	**S**	**.668**	**1.187**	**1.191**	**.185**	**48**
*481490	S	.500	1.000	1.004	.250	48
*481504	S	1.750	2.437	2.441	.312	48
*481504H	H	1.750	2.437	2.441	.312	48

For Illustration and Material Data See Technical Section

* The U.S. customer service number is 877-4-TIMKEN. The Canadian customer service numbers are 800-565-4927 (English) and 800-565-0438 (French-Canadian). ★ Metric Seal

480000 SERIES (cont.)

Part No.	Lip Mat'l	Shaft Size	Hsg. Bore	Seal O.D.	Seal Width	Type/ Illus.
*481507	S	1.500	2.252	2.256	.375	48
*481507H	H	1.500	2.252	2.256	.375	48
*481507N	N	1.500	2.252	2.256	.375	48
*481507V	V	1.500	2.252	2.256	.375	48
*481509	S	2.500	3.250	3.256	.437	48
*481509H	H	2.500	3.250	3.256	.437	48
*481526	S	.500	1.124	1.128	.250	48
*481526N	N	.500	1.124	1.128	.250	48
481528	**S**	**.656**	**1.124**	**1.128**	**.250**	**48**
*481529	S	.687	1.124	1.128	.250	48
*481529N	N	.687	1.124	1.128	.250	48
*481534	S	.531	1.250	1.254	.250	48
*481535	S	.562	1.250	1.254	.250	48
481537	**S**	**.656**	**1.250**	**1.254**	**.250**	**48**
481538	S	.687	1.250	1.254	.250	48
*481538V	V	.687	1.250	1.254	.250	48
*481539	S	.812	1.250	1.254	.250	48
*481551	S	.562	1.375	1.379	.250	48
*481551H	H	.562	1.375	1.379	.250	48
*481552	S	.593	1.375	1.379	.250	48
*481553	S	.687	1.375	1.379	.250	48
*481554	S	.750	1.375	1.379	.250	48
*481554N	N	.750	1.375	1.379	.250	48
*481554V	V	.750	1.375	1.379	.250	48
*481564	S	.625	1.499	1.503	.250	48
*481567	S	.750	1.499	1.503	.250	48
481568	**S**	**.781**	**1.499**	**1.503**	**.250**	**48**
*481570	S	.875	1.499	1.503	.250	48
*481570V	V	.875	1.499	1.503	.250	48
*481571	S	.937	1.499	1.503	.250	48
481571V	V	.937	1.499	1.503	.250	48
*481572	S	.968	1.499	1.503	.250	48
*481572V	V	.968	1.499	1.503	.250	48
*481577	S	.625	1.499	1.503	.312	48
*481579	S	.687	1.499	1.503	.312	48
*481580	S	.750	1.499	1.503	.312	48
*481582	S	.937	1.499	1.504	.312	48
*481583	S	.968	1.499	1.503	.312	48
*481592	S	.656	1.561	1.565	.250	48
*481612	S	.625	1.575	1.579	.312	48
*481633	S	.875	1.577	1.581	.250	48
*481643	S	.750	1.624	1.628	.250	48
481644	**S**	**.781**	**1.624**	**1.628**	**.250**	**48**
*481646	S	.875	1.624	1.628	.250	48
*481647	S	.937	1.624	1.628	.250	48
*481648	S	.968	1.624	1.628	.250	48
*481649	S	1.000	1.624	1.628	.250	48
*481649N	N	1.000	1.624	1.628	.250	48
481650	S	1.031	1.624	1.628	.250	48
*481651	S	1.062	1.624	1.628	.250	48
*481652	S	1.125	1.624	1.628	.250	48
*481652N	N	1.125	1.624	1.628	.250	48
481652V	V	1.125	1.624	1.628	.250	48
*481656	S	.750	1.624	1.628	.312	48
*481656V	V	.750	1.624	1.628	.312	48
*481659	S	.875	1.624	1.628	.312	48
*481662	S	1.000	1.624	1.628	.312	48
*481662H	H	1.000	1.624	1.628	.312	48
*481674	S	.875	1.689	1.690	.250	48
*481677	S	1.062	1.689	1.693	.250	48
*481678	S	1.125	1.689	1.693	.250	48
*481682	S	.656	1.752	1.756	.250	48
*481684	S	.750	1.752	1.756	.250	48
*481688	S	.968	1.752	1.756	.250	48
*481688N	N	.968	1.752	1.756	.250	48
*481689	S	1.000	1.752	1.756	.250	48
*481689N	N	1.000	1.752	1.756	.250	48
*481692	S	1.125	1.752	1.756	.250	48

480000 SERIES (cont.)

Part No.	Lip Mat'l	Shaft Size	Hsg. Bore	Seal O.D.	Seal Width	Type/ Illus.
*481700	S	.875	1.752	1.756	.312	48
*481702	S	.968	1.752	1.756	.312	48
*481703	S	1.000	1.752	1.756	.312	48
*481706	S	1.125	1.752	1.756	.312	48
*481708	S	1.187	1.752	1.756	.312	48
*481709	S	1.250	1.752	1.756	.312	48
*481718	S	1.062	1.752	1.756	.375	48
*481730H	H	.875	1.874	1.878	.250	48
*481733	S	1.000	1.874	1.878	.250	48
*481736	S	1.156	1.874	1.878	.250	48
*481737	S	1.250	1.874	1.878	.250	48
*481737V	V	1.250	1.874	1.878	.250	48
*481741	S	.875	1.983	1.987	.250	48
*481748N	N	1.156	1.983	1.987	.250	48
*481750	S	1.250	1.983	1.987	.250	48
*481760	S	1.000	2.000	2.004	.250	48
*481763	S	1.125	2.000	2.004	.250	48
*481765	S	1.187	2.000	2.004	.250	48
*481766	S	1.250	2.000	2.004	.250	48
*481770	S	1.000	2.000	2.004	.375	48
*481772	S	1.062	2.000	2.004	.375	48
481773	S	1.156	2.000	2.004	.375	48
*481787	S	1.250	2.062	2.066	.250	48
*481787N	N	1.250	2.062	2.066	.250	48
481792	**S**	**1.125**	**2.125**	**2.129**	**.250**	**48**
*481792N	N	1.125	2.125	2.129	.250	48
*481795	S	1.250	2.125	2.129	.250	48
*481801	S	1.250	2.252	2.256	.375	48
*481801N	N	1.250	2.252	2.256	.375	48
*481808	S	1.250	2.374	2.378	.375	48
*481809	S	1.437	2.374	2.378	.375	48
*481810	S	1.562	2.374	2.378	.375	48
*481812	S	1.687	2.374	2.378	.375	48
*481818	S	1.250	2.437	2.441	.375	48
*481821	S	1.562	2.437	2.441	.375	48
481826	S	1.437	2.441	2.445	.375	48
*481833	S	1.250	2.502	2.506	.375	48
481834	S	1.312	2.502	2.506	.375	48
*481835	S	1.375	2.502	2.506	.375	48
481837	S	1.500	2.502	2.506	.375	48
*481838	S	1.593	2.502	2.506	.375	48
*481839	S	1.625	2.502	2.506	.375	48
*481839N	N	1.625	2.502	2.506	.375	48
*481847	S	1.375	2.561	2.565	.500	48
*481857	S	1.500	2.623	2.627	.500	48
481859	S	1.250	2.686	2.690	.375	48
481864	**S**	**1.625**	**2.686**	**2.690**	**.375**	**48**
*481864H	H	1.625	2.686	2.690	.375	48
*481887H	H	2.437	3.125	3.130	.375	48
*481901	S	1.312	2.750	2.754	.500	48
*481936	S	1.875	2.875	2.879	.437	48
*481944	S	2.000	2.875	2.879	.437	48
*481952	S	2.187	2.835	2.839	.468	48
*481953	S	2.187	2.875	2.879	.437	48
*481958	S	1.500	3.000	3.005	.375	48
*481982	S	1.687	3.125	3.130	.375	48
*481984	S	1.750	3.000	3.005	.375	48
*481984N	N	1.750	3.000	3.005	.375	48
481992	S	1.812	3.125	3.130	.375	48
*482005	S	1.875	3.125	3.130	.375	48
*482009	S	2.000	3.000	3.005	.375	48
*482010	S	2.000	3.125	3.130	.375	48
*482012	S	2.062	3.000	3.005	.375	48
*482015	S	2.125	3.000	3.005	.375	48
*482015H	H	2.125	3.000	3.005	.375	48
*482015N	N	2.125	3.000	3.005	.375	48
*482015V	V	2.125	3.000	3.005	.375	48
*482016	S	2.125	3.125	3.130	.375	48

For Illustration and Material Data See Technical Section

* The U.S. customer service number is 877-4-TIMKEN. The Canadian customer service numbers are 800-565-4927 (English) and 800-565-0438 (French-Canadian).

480000 SERIES (cont.)

Part No.	Lip Mat'l	Shaft Size	Hsg. Bore	Seal O.D.	Seal Width	Type/ Illus.
*482017	S	2.187	2.996	3.001	.437	48
*482018	S	2.187	3.000	3.005	.375	48
*482019	S	2.187	3.062	3.066	.500	48
*482020	S	2.187	3.125	3.130	.375	48
*482029	S	2.500	3.189	3.194	.375	48
*482035	S	2.187	3.371	3.376	.468	48
*482041	S	1.875	2.502	2.506	.375	48
482041N	N	1.875	2.502	2.506	.375	48
*482042	S	1.593	2.437	2.441	.500	48
482069N	N	.860	1.437	1.441	.250	48
*482089	S	.781	1.850	1.854	.312	48
*482090	S	.968	1.850	1.854	.312	48
482126	S	1.750	2.328	2.332	.437	48
*482144	S	1.937	2.875	2.879	.312	48
*482157N	N	4.250	5.251	5.256	.375	48
482163	S	1.375	1.983	1.987	.312	48
482163N	**N**	**1.375**	**1.983**	**1.987**	**.312**	**48**
*482164	S	1.750	2.502	2.506	.312	48
482164N	N	1.750	2.502	2.506	.312	48
*482167	S	1.375	2.250	2.254	.325	48
*482170	S	1.625	2.875	2.879	.500	48
*482179	S	1.750	2.750	2.754	.312	48
*482185	S	1.750	2.623	2.627	.312	48
482208	S	1.125	1.624	1.628	.245	48
*482213	S	1.562	2.250	2.254	.312	48
482230N	N	1.250	2.126	2.130	.375	48
*482246	S	1.750	2.374	2.378	.437	48
482253	**S**	**1.593**	**2.502**	**2.506**	**.250**	**48**
*482253N	N	1.593	2.502	2.506	.250	48
*482258	S	1.375	2.000	2.004	.312	48
482258V	V	1.375	2.000	2.004	.312	48
482267	S	1.750	3.153	3.159	.312	48
*482299	S	1.562	2.374	2.378	.312	48
*482299N	N	1.562	2.374	2.378	.312	48
482309	**S**	**.968**	**1.850**	**1.854**	**.375**	**48**
482310	**S**	**.968**	**2.048**	**2.052**	**.375**	**48**
*482319	S	1.937	2.623	2.627	.312	48
*482336	S	1.000	1.828	1.832	.375	48
*482350	S	1.187	2.165	2.169	.250	48
*482371	S	.906	1.625	1.629	.312	48
*482394	S	1.937	3.000	3.005	.312	48
*482397	S	2.000	3.000	3.005	.312	48
*482401	S	1.625	2.437	2.441	.500	48
*482401V	V	1.625	2.437	2.441	.500	48
482415★	S	*38,00*	*52,27*	*52,40*	*6,35*	48
		1.496	2.058	2.063	.250	
*482422	S	1.437	2.062	2.066	.375	48
*482435	S	2.172	3.345	3.350	.500	48
*482439	S	1.875	2.623	2.627	.312	48
*482454	S	1.093	1.625	1.628	.312	48
*482457H	H	1.156	1.874	1.878	.437	48
*482475	S	1.187	1.874	1.878	.250	48
*482485	S	2.000	2.686	2.690	.375	48
*482492	S	2.000	2.750	2.754	.312	48
*482513H	H	2.156	2.875	2.879	.375	48
*482522	S	1.000	1.874	1.878	.375	48
*482523	S	1.125	1.874	1.878	.375	48
*482554N	N	1.500	1.983	1.987	.437	48
*482572	S	1.875	2.750	2.754	.312	48
*482576	S	1.375	2.125	2.129	.375	48
482576N	N	1.375	2.125	2.129	.375	48
*482582	S	.968	1.750	1.754	.375	48
*482583★	S	*25,00*	*47,00*	*47,10*	*9,50*	48
		.984	1.850	1.854	.374	
*482584	S	1.062	1.828	1.832	.375	48
*482584V	V	1.062	1.828	1.832	.375	48
*482585	S	1.187	2.062	2.066	.375	48
*482591	S	1.500	2.328	2.332	.437	48

480000 SERIES (cont.)

Part No.	Lip Mat'l	Shaft Size	Hsg. Bore	Seal O.D.	Seal Width	Type/ Illus.
*482605N	N	1.593	2.502	2.506	.281	48
*482612	S	2.125	2.875	2.879	.500	48
*482629	S	1.687	2.875	2.879	.500	48
*482636	S	2.250	3.251	3.256	.375	48
*482674	S	1.125	1.983	1.987	.375	48
*482695N	S	1.812	2.624	2.629	.500	48
*482758	S	1.625	2.502	2.506	.250	48
*482810	S	.437	.875	.880	.250	48
*482916	S	2.250	3.189	3.194	.375	48
*482920	S	2.250	3.371	3.376	.375	48
*482924	S	2.000	2.875	2.879	.312	48
*483010	S	1.625	2.502	2.506	.312	48
*483010N	N	1.625	2.502	2.506	.312	48
*483011N	N	.875	1.573	1.577	.250	48
*483022	S	1.375	2.125	2.130	.375	48
*483027V	V	.984	1.749	1.753	.375	48
483054N	N	1.175	1.828	1.832	.312	48
*483054V	V	1.175	1.828	1.832	.312	48
*483197N	N	1.375	2.835	2.839	.312	48
*483203	S	1.187	1.752	1.756	.250	48
*483205	S	1.187	2.125	2.129	.250	48
*483214	S	1.375	2.250	2.254	.312	48
*483215	S	1.375	2.374	2.378	.312	48
*483215V	V	1.375	2.374	2.378	.312	48
*483227	S	1.500	2.125	2.129	.312	48
*483228	S	1.500	2.502	2.506	.312	48
*483229	S	1.562	2.502	2.506	.312	48
*483230	S	1.625	2.250	2.254	.312	48
483230V	V	1.625	2.250	2.254	.312	48
*483231	S	1.625	2.374	2.378	.312	48
*483232	S	1.625	2.623	2.627	.312	48
*483237	S	1.750	2.374	2.378	.312	48
*483238	S	1.875	2.875	2.879	.312	48
483238V	V	1.875	2.875	2.879	.312	48
*483239	S	1.875	3.000	3.005	.312	48
*483240	S	1.875	3.125	3.130	.312	48
*483241	S	1.937	2.750	2.754	.312	48
*483242	S	2.000	3.125	3.130	.312	48
*483243	S	2.125	3.251	3.256	.375	48
*483244	S	2.187	2.875	2.879	.375	48
*483245	S	2.187	3.251	3.256	.375	48
*483246	S	2.375	3.251	3.256	.375	48
483246N➡	N	2.375	3.251	3.256	.375	48
*483247	S	2.375	3.371	3.376	.375	48
*483248	S	2.625	3.371	3.376	.375	48
483323V	V	2.250	3.000	3.005	.438	48
*483326	S	1.730	2.834	2.838	.468	48
483367V	V	1.625	2.437	2.441	.312	48
483459H	H	1.937	2.686	2.690	.312	48
483488➡	S	1.175	1.771	1.775	.275	48
*483503	S	1.750	2.500	2.504	.375	48
*483525V	V	1.618	2.124	2.128	.250	48
*483562	S	1.375	1.983	1.987	.375	48
*483562N	N	1.375	1.983	1.987	.375	48
*483565	S	1.750	2.497	2.501	.500	48
*483602	S	1.730	2.834	2.838	.375	48
*483643	S	1.494	1.875	1.879	.187	48
*483738V★	V	*50,00*	*68,00*	*68,15*	*8,00*	48
		1.969	2.677	2.683	.315	
483793	S	1.343	2.441	2.445	.375	48
*483801	S	1.875	2.441	2.445	.325	48
*483815	S	2.125	3.350	3.356	1.250	48
484054	**S**	**1.326**	**2.061**	**2.065**	**.375**	**48**
484058	**S**	**1.322**	**2.227**	**2.231**	**.375**	**48**
*484063★	S	*35,00*	*52,00*	*52,10*	*7,90*	48
		1.378	2.047	2.051	.311	
484064V	V	2.062	2.561	2.565	.313	48
*484103	S	1.734	2.835	2.839	.312	48

For Illustration and Material Data See Technical Section
➡ Hydrodynamic Lip Design-CW
* The U.S. customer service number is 877-4-TIMKEN. The Canadian customer service numbers are 800-565-4927 (English) and 800-565-0438 (French-Canadian). ★ Metric Seal

480000 SERIES (cont.)

Part No.	Lip Mat'l	Shaft Size	Hsg. Bore	Seal O.D.	Seal Width	Type/ Illus.
484114	S	.625	1.625	1.629	.250	48
*484132	S	1.040	1.811	1.815	.280	48
484156V	**V**	**1.375**	**1.874**	**1.879**	**.240**	**48**
*484178	S	1.312	2.062	2.066	.375	48
*484206	S	1.618	2.000	2.004	.235	48
*484211	S	1.000	2.000	2.004	.500	48
*484236V★	V	*45,00*	*61,00*	*61,16*	*9,00*	48
		1.772	2.402	2.408	.354	
*484247	S	1.875	2.560	2.565	.468	48
*485001	S	2.500	3.543	3.548	.500	48
*485002	S	2.562	3.623	3.628	.468	48
485003	S	2.625	3.623	3.628	.468	48
*485003V	V	2.625	3.623	3.628	.468	48
*485004	S	2.750	3.751	3.756	.500	48
*485006	S	2.875	3.751	3.756	.500	48
*485007	S	2.625	3.876	3.881	.468	48
*485009	S	2.750	3.876	3.881	.468	48
*485011	S	2.875	4.003	4.008	.468	48
*485011N	N	2.875	4.003	4.008	.468	48
*485013	S	3.000	4.003	4.008	.468	48
*485014	S	3.000	4.249	4.254	.625	48
*485016	S	3.125	4.249	4.254	.625	48
*485018	S	3.250	4.249	4.254	.625	48
*485019	S	3.000	4.999	5.004	.468	48
*485021	S	3.125	4.999	5.004	.468	48
*485023	S	3.250	4.999	5.004	.468	48
*485025	S	3.375	4.999	5.004	.468	48
*485027	S	3.500	4.999	5.004	.468	48
*485027N	N	3.500	4.999	5.004	.468	48
*485029	S	3.625	4.999	5.004	.468	48
*485031	S	3.750	4.999	5.004	.468	48
*485033	S	3.875	4.999	5.004	.468	48
*485033V	V	3.875	4.999	5.004	.468	48
*485035	S	4.000	4.999	5.004	.468	48
*485035N	N	4.000	4.999	5.004	.468	48
*485036	S	4.000	5.501	5.506	.562	48
*485040	S	4.250	5.501	5.506	.562	48
*485041	S	4.000	5.751	5.756	.562	48
*485045	S	4.250	5.751	5.756	.562	48
*485047	S	4.375	5.751	5.756	.562	48
*485049	S	4.500	5.751	5.756	.562	48
*485053	S	4.750	5.751	5.756	.562	48
*485054	S	4.000	6.250	6.256	.562	48
*485058	S	4.250	6.250	6.256	.562	48
*485060	S	4.375	6.250	6.256	.562	48
*485062	S	4.500	6.250	6.256	.562	48
*485064	S	4.625	6.250	6.256	.562	48
*485066	S	4.750	6.250	6.256	.562	48
*485068	S	4.875	6.250	6.256	.562	48
*485070	S	5.000	6.250	6.256	.562	48
*485072	S	6.000	7.501	7.508	.562	48
*485079	S	2.500	3.751	3.756	.500	48
*485082	S	2.500	3.876	3.881	.468	48
*485088	S	3.000	4.499	4.504	.468	48
*485091	S	4.875	5.999	6.007	.625	48
*485093	S	2.250	3.500	3.505	.500	48
*485095	S	2.375	3.500	3.505	.500	48
*485137	S	3.250	4.499	4.504	.468	48
*485138	S	4.750	5.750	5.756	.500	48
*485138V	V	4.750	5.751	5.756	.500	48
*485144	S	2.875	4.499	4.504	.468	48
*485145	S	3.125	4.499	4.504	.468	48
*485146	S	3.500	4.499	4.504	.468	48
*485147	S	2.500	3.500	3.505	.500	48
*485148	S	3.875	5.251	5.256	.468	48
*485149	S	2.625	3.751	3.756	.500	48
*485150	S	3.750	5.251	5.256	.468	48
*485151	S	2.687	3.751	3.756	.500	48

480000 SERIES (cont.)

Part No.	Lip Mat'l	Shaft Size	Hsg. Bore	Seal O.D.	Seal Width	Type/ Illus.
*485152	S	2.875	4.125	4.130	.562	48
*485154	S	3.000	4.125	4.130	.562	48
*485156	S	3.125	4.125	4.130	.562	48
*485160	S	3.125	4.376	4.381	.625	48
*485162	S	3.250	4.376	4.381	.625	48
*485165	S	3.375	4.499	4.504	.468	48
*485173	S	3.500	4.751	4.756	.625	48
*485175	S	3.625	4.751	4.756	.625	48
*485177	S	3.750	4.751	4.756	.625	48
*485179	S	3.875	4.751	4.756	.625	48
*485179N	N	3.875	4.751	4.756	.625	48
*485192	S	4.000	5.251	5.256	.468	48
*485194H	H	4.187	5.250	5.256	.468	48
*485195	S	4.250	5.251	5.256	.468	48
485195H	H	4.250	5.251	5.256	.468	48
*485196	S	4.250	5.376	5.381	.500	48
*485197H	H	4.312	5.501	5.506	.562	48
*485198	S	4.375	5.501	5.506	.562	48
*485200	S	4.500	5.501	5.506	.562	48
*485201	S	4.000	5.999	6.007	.625	48
*485205	S	4.250	5.999	6.007	.625	48
*485207	S	4.375	5.999	6.007	.625	48
*485209	S	4.500	5.999	6.007	.625	48
*485211	S	4.625	5.999	6.007	.625	48
*485213	S	4.750	5.999	6.007	.625	48
*485234	S	2.250	3.623	3.628	.468	48
*485245	S	3.125	4.751	4.756	.625	48
*485259	S	2.250	3.751	3.756	.500	48
*485260	S	2.062	3.623	3.628	.468	48
*485262	S	3.500	5.501	5.506	.562	48
*485265	S	3.250	4.751	4.756	.625	48
*485271	S	5.000	5.999	6.007	.625	48
*485272	S	2.750	4.003	4.008	.468	48
*485281	S	3.000	3.751	3.756	.500	48
*485296	S	2.625	4.003	4.008	.468	48
*485303	S	2.875	3.623	3.628	.375	48
*485303N	N	2.875	3.623	3.628	.375	48
*485304	S	3.250	4.249	4.254	.500	48
*485315	S	2.750	3.623	3.628	.468	48
*485322	S	2.750	3.543	3.548	.500	48
*485328	S	3.250	5.251	5.256	.468	48
*485350	S	2.187	3.623	3.628	.468	48
*485354	S	3.125	4.003	4.008	.468	48
*485355	S	2.875	3.876	3.881	.468	48
*485364	S	2.750	3.500	3.505	.500	48
*485364H	H	2.750	3.500	3.505	.500	48
485364N	N	2.750	3.500	3.505	.500	48
*485368	S	2.625	3.500	3.505	.500	48
*485369	S	2.500	3.623	3.628	.468	48
*485371	S	4.625	5.751	5.756	.562	48
*485379	S	3.750	4.751	4.756	.500	48
*485379N	N	3.750	4.751	4.756	.500	48
*485389	S	3.625	4.499	4.504	.468	48
*485394	S	3.125	5.251	5.256	.468	48
*485396	S	3.500	5.751	5.756	.562	48
*485423	S	3.750	5.501	5.506	.562	48
*485436	S	3.625	5.751	5.756	.562	48
*485437	S	3.500	4.750	4.756	.500	48
*485449	S	2.500	3.500	3.505	.375	48
*485458	S	2.625	3.623	3.628	.375	48
*485479	S	3.000	3.876	3.881	.468	48
*485483	S	2.625	3.500	3.505	.375	48
485497	S	3.625	4.874	4.879	.585	48
*485498	S	3.562	4.499	4.504	.468	48
*485500N	N	3.298	4.125	4.130	.562	48
*485559	S	3.500	5.251	5.256	.468	48
*485566	S	3.250	4.125	4.130	.562	48
*485613	S	3.375	4.249	4.254	.625	48

For Illustration and Material Data See Technical Section

* The U.S. customer service number is 877-4-TIMKEN. The Canadian customer service numbers are 800-565-4927 (English) and 800-565-0438 (French-Canadian). ★ Metric Seal

480000 SERIES (cont.)

Part No.	Lip Mat'l	Shaft Size	Hsg. Bore	Seal O.D.	Seal Width	Type/ Illus.
*485636	S	2.187	3.500	3.505	.500	48
*485645	S	5.250	6.500	6.507	.562	48
*485655	S	2.500	4.003	4.008	.468	48
*485659	S	2.125	3.500	3.505	.500	48
*485697	S	3.875	5.125	5.131	.500	48
*485725	S	5.000	6.001	6.007	.500	48
*485725H	H	5.000	5.999	6.007	.500	48
*485725N	N	5.000	5.999	6.007	.500	48
*485836	S	3.000	4.003	4.008	.437	48
*485852	S	3.750	5.751	5.756	.562	48
*485869N	N	5.500	7.248	7.255	.656	48
*485894	S	3.375	4.376	4.381	.500	48
*485937	S	3.625	4.751	4.756	.500	48
*485953	S	4.000	4.999	5.004	.500	48
*485960	S	2.750	3.876	3.881	.375	48
*485984	S	2.750	3.623	3.628	.375	48
*485991N	N	3.500	4.501	4.506	.468	48
*485996N	N	3.375	4.280	4.285	.406	48
*486011	S	3.125	4.125	4.130	.500	48
*486023	S	3.000	3.751	3.756	.375	48
*486023N	N	3.000	3.751	3.756	.375	48
*486041	S	3.750	4.626	4.632	.500	48
*486043	S	3.875	5.751	5.756	.562	48
*486047	S	3.625	4.625	4.631	.500	48
*486107	S	5.500	6.750	6.757	.575	48
*486125	S	3.625	4.999	5.004	.500	48
*486128	S	3.875	5.501	5.506	.562	48
*486130	S	4.000	5.375	5.381	.500	48
*486135	S	4.250	5.625	5.631	.500	48
*486153	S	4.500	5.625	5.631	.500	48
*486167	S	4.875	5.999	6.007	.500	48
*486167H	H	4.875	5.999	6.007	.500	48
*486267	S	2.125	3.501	3.505	.375	48
*486268	S	2.187	3.500	3.505	.375	48
*486271	S	2.375	3.500	3.505	.375	48
*486273	S	2.500	3.623	3.628	.375	48
*486281N	N	2.750	4.125	4.130	.562	48
*486281V	V	2.750	4.125	4.130	.562	48
*486286	S	2.875	4.249	4.254	.625	48
*486287	S	3.125	4.249	4.254	.468	48
*486288	S	3.125	4.249	4.254	.500	48
*486294	S	3.375	4.249	4.254	.500	48
*486303	S	3.250	4.626	4.631	.437	48
*486319	S	3.375	4.626	4.631	.437	48
*486319V	V	3.375	4.626	4.631	.437	48
*486323	S	3.375	4.751	4.756	.625	48
*486327	S	3.375	5.251	5.256	.468	48
*486328	S	3.500	4.626	4.631	.437	48
*486332	S	3.625	4.626	4.631	.437	48
*486332N	N	3.625	4.626	4.631	.437	48
*486335	S	3.625	5.251	5.256	.468	48
*486336	S	3.750	4.626	4.631	.437	48
*486339	S	3.750	4.999	5.004	.500	48
*486345	S	3.875	4.999	5.004	.500	48
*486370	S	3.000	4.751	4.756	.625	48
*486380	S	4.375	5.500	5.506	.500	48
*486414	S	3.500	4.500	4.506	.500	48
*486517	S	3.937	5.905	5.911	.500	48
*486544N	N	3.750	4.751	4.756	.375	48
*486556	S	4.250	5.250	5.256	.500	48
486567	S	3.375	4.370	4.375	.250	48
*486624	S	3.500	4.376	4.381	.500	48
*486642	S	8.750	10.250	10.260	.688	48
*486642H	H	8.750	10.250	10.260	.688	48
*486664	S	2.750	3.500	3.505	.375	48
*486666	S	5.750	7.001	7.008	.562	48
*486701	V	6.125	7.125	7.131	.500	48
486857	S	2.648	3.812	3.817	.500	48

480000 SERIES (cont.)

Part No.	Lip Mat'l	Shaft Size	Hsg. Bore	Seal O.D.	Seal Width	Type/ Illus.
*486865	S	5.000	6.250	6.256	.500	48
*486888	S	4.500	5.500	5.506	.500	48
*486888H	H	4.500	5.500	5.506	.500	48
*486891	S	4.250	5.500	5.506	.500	48
*486892	S	4.500	5.750	5.756	.500	48
*486893	S	3.062	4.003	4.008	.468	48
*486921	S	2.875	4.003	4.008	.375	48
*486923V	V	3.750	4.750	4.756	.375	48
*486985	S	3.875	4.750	4.756	.375	48
*486985V	V	3.875	4.750	4.756	.375	48
*487034V	V	3.125	4.003	4.008	.500	48
*487056	S	3.250	6.374	6.380	.468	48
*487063V	V	4.875	5.750	5.756	.500	48
*487082	S	2.625	4.003	4.008	.375	48
*487119	S	3.000	4.125	4.130	.438	48
*487158	S	2.875	3.876	3.881	.375	48
*487162	S	3.000	4.500	4.506	.500	48
*487171	S	3.125	4.375	4.381	.500	48
*487172	S	3.125	4.500	4.506	.500	48
*487181	S	3.250	4.376	4.381	.500	48
*487191	S	3.375	4.500	4.506	.500	48
*487196	S	3.500	4.625	4.631	.500	48
*487205	S	3.750	4.875	4.881	.500	48
*487211	S	3.875	4.875	4.881	.500	48
*487247	S	4.750	6.001	6.007	.500	48
*487250V	V	4.750	6.000	6.006	.500	48
*487254	S	5.500	6.500	6.507	.562	48
*487262	S	5.250	6.250	6.256	.500	48
*487278	S	5.000	6.375	6.381	.500	48
*487316	S	2.750	3.751	3.756	.375	48
*487319	S	3.375	4.250	4.255	.280	48
*487343	S	2.625	3.751	3.756	.375	48
*487344	S	2.875	3.751	3.756	.375	48
487344V	V	2.875	3.751	3.756	.375	48
*487349	S	3.000	3.751	3.756	.437	48
*487350	S	3.000	3.876	3.881	.437	48
*487351	S	3.000	4.125	4.130	.437	48
*487352	S	3.250	4.500	4.506	.500	48
*487353	S	3.250	4.626	4.632	.500	48
*487354	S	3.375	4.626	4.632	.500	48
*487355	S	3.625	4.875	4.881	.500	48
*487356	S	4.000	5.125	5.131	.500	48
*487357	S	4.000	5.250	5.256	.500	48
*487358	S	5.250	6.375	6.381	.500	48
*487359	S	5.250	6.625	6.632	.562	48
*487360	S	5.500	6.625	6.632	.562	48
*487361	S	5.500	6.875	6.882	.562	48
*487362	S	5.750	6.750	6.757	.575	48
*487363	S	5.750	6.875	6.882	.562	48
*487364	S	5.750	7.125	7.132	.562	48
*487365	S	6.000	7.125	7.132	.562	48
*487366	S	3.875	5.250	5.256	.500	48
*487384N	N	2.750	4.375	4.380	.625	48
*487397N	N	3.625	4.624	4.630	.500	48
487397V➡	V	3.625	4.624	4.630	.500	48
*487658	S	2.634	3.937	3.942	.375	48
*487678N	N	2.750	4.125	4.130	.437	48
*487806	S	4.687	6.001	6.007	.280	48
487945	S	2.000	3.623	3.628	.375	48
*488020V	V	2.875	3.740	3.746	.551	48

490000 SERIES

Part No.	Lip Mat'l	Shaft Size	Hsg. Bore	Seal O.D.	Seal Width	Type/ Illus.
*492486	S	2.375	3.266	3.270	.495	49
*492521N	N	1.500	2.000	2.005	.250	49
*492702	S	2.000	2.623	2.627	.250	49
493291★	S	*57,99*	*80,14*	*80,24*	*9,53*	49
		2.283	3.155	3.159	.375	
493524	S	2.000	2.846	2.850	.375	49
493637	S	2.330	2.997	3.001	.312	49

For Illustration and Material Data See Technical Section

➡ Hydrodynamic Lip Design-CW

* The U.S. customer service number is 877-4-TIMKEN. The Canadian customer service numbers are 800-565-4927 (English) and 800-565-0438 (French-Canadian). ★ Metric Seal

Part No.	Lip Mat'l	Shaft Size	Hsg. Bore	Seal O.D.	Seal Width	Type/ Illus.
490000 SERIES (cont.)						
*493759★	S	*48,00*	*65,00*	*65,10*	*7,00*	49
		1.890	2.559	2.563	.276	
494117★	S	*42,00*	*56,00*	*56,28*	*7,00*	49
		1.654	2.205	2.216	.276	
494122★	S	*45,00*	*62,00*	*62,10*	*6,00*	49
		1.772	2.441	2.445	.236	
494123★	S	*51,00*	*63,00*	*63,12*	*6,00*	49
		2.008	2.480	2.485	.236	
*498040	S	3.750	5.000	5.009	.370	49
580000 SERIES						
*580387★➡	S	*32,00*	*47,00*	*47,20*	*8,00*	32
		1.260	1.850	1.858	.315	
*580388★➡	S	*34,00*	*48,00*	*48,20*	*7,00*	32
		1.339	1.890	1.898	.276	
600000 SERIES						
*600305★⬅	T	*95,00*	*115,00*	*115,32*	*12,12*	#
		3.740	4.528	4.540	.477	
*600319⬅	V	6.107	6.750	6.757	.675	41
710000 SERIES						
710005	S	1.750	3.062	3.066	.485	86
710006➡	N	2.375	4.500	4.504	1.060	74
710007	S	2.000	3.370	–	1.020	#
710008&	N	3.000	5.751	5.756	.840	74
710009	U	3.000	4.000	4.012	.600	#
710010	U	2.750	3.750	3.754	.500	#
710011	U	3.000	4.000	4.008	.500	#
710012	U	1.500	2.250	2.254	.375	#
710013	U	1.750	2.437	2.441	.375	#
710014	U	1.250	1.750	1.756	.250	#
710015	U	3.500	4.500	4.504	.500	#
710016	U	3.250	4.250	4.255	.500	#
710017	U	2.000	2.687	2.690	.375	#
710018	U	2.500	3.250	3.255	.375	#
710019	U	1.875	2.875	2.886	.625	#
710020	U	1.500	2.250	–	.500	#
*710021	N	2.125	3.063	3.068	.370	7S
710022	H	4.000	4.999	5.004	.468	45
710023	U	1.500	2.000	–	.250	#
710024	U	1.750	2.250	–	.250	#
710025	U	2.000	2.500	–	.250	#
710026	U	2.250	2.750	–	.250	#
710027	U	2.500	3.000	–	.313	#
710028	U	3.000	3.500	–	.313	#
710029	U	3.500	4.000	–	.313	#
710030	U	3.500	4.125	–	.313	#
710031	U	4.000	4.750	4.760	.313	#
710032	U	5.000	5.750	–	.313	#
*710033	U	2.500	3.000	–	.313	#
710034	U	2.500	3.000	–	.375	#
710035	U	3.750	4.375	–	.312	#
710036	U	4.000	4.625	4.634	.312	#
*710037	U	4.750	5.375	–	.312	#
710038	U	2.750	3.250	–	.312	#
710039	U	2.735	3.415	–	.188	#
710040	U	2.000	2.500	–	.375	#
710041	U	2.250	2.750	–	.375	#
710042	U	2.485	3.165	–	.188	#
710043	S	1.301	2.620	2.625	.315	#
710044	S	1.500	1.875	–	.188	#
710045	S	2.250	–	2.840	.500	VRS1
710046➡	S	1.552	2.447	2.452	.500	86
*710050★	S	*40,00*	*75,00*	*75,30*	*12,00*	32
		1.575	2.953	2.965	.472	
710051★&	S	*35,00*	*48,00*	*48,28*	*15,00*	86
		1.378	1.890	1.901	.591	
710053	S	1.047	1.811	1.815	.285	48
710000 SERIES (cont.)						
710056★⬅	V	*91,00*	*111,00*	*111,20*	*10,00*	47
		3.583	4.370	4.378	.394	
710057★	S	*36,00*	*65,00*	*65,20*	*8,00*	48
		1.417	2.559	2.567	.315	
710058	S	1.937	2.562	2.566	.317	48
710059	S	1.000	1.322	1.328	.210	48
710060★⬅	H	*95,00*	*118,00*	*118,16*	*8,50*	32
		3.740	4.646	4.652	.335	
710061⬅	H	4.000	4.921	4.932	.512	32
710062	S	1.750	2.374	2.378	.484	#
*710063	S	1.625	2.440	2.444	.500	#
*710064★	S	*52,00*	*68,00*	*68,09*	*12,09*	#
		2.047	2.677	2.681	.476	
710065★	S	*30,00*	*65,00*	*65,23*	*34,00*	#
		1.181	2.559	2.568	1.339	
*710066&	S	1.400	2.478	2.486	.521	83
710067⬅➡	S	1.703	3.030	3.039	.500	69
710068	S	1.190	2.122	2.128	.350	#
710069&	S	2.201	2.830	2.836	.450	#
710070★	S	*33,00*	*44,00*	*44,18*	*7,00*	47
		1.299	1.732	1.739	.276	
710071★	S	*50,00*	*94,00*	*94,28*	*24,00*	#
		1.969	3.701	3.712	.945	
710072★	S	*57,00*	*79,00*	*79,28*	*13,50*	#
		2.244	3.110	3.121	.531	
710073★	S	*54,00*	*75,18*	*75,48*	*17,00*	#
		2.126	2.960	2.972	.669	
710074★	S	*57,00*	*79,00*	*79,28*	*14,98*	#
		2.244	3.110	3.121	.590	
710075⬅	V	2.832	3.625	3.635	.374	32
710076	S	1.350	1.620	1.625	.355	#
710077	S	3.375	3.948	3.955	.375	32
710078★	V	*45,00*	*62,00*	*62,15*	*8,00*	47
		1.772	2.441	2.447	.315	
710080	S	3.125	4.450	4.456	.880	#
710081	S	1.937	3.930	3.935	.320	#
710084★	S	*120,00*	*140,00*	*140,21*	*10,50*	47
		4.724	5.512	5.520	.413	
710085★	S	*95,00*	*132,00*	*132,26*	*12,00*	#
		3.740	5.197	5.207	.472	
710086★	S	*56,00*	*122,00*	*122,25*	*8,00*	#
		2.205	4.803	4.813	.315	
710087★	S	*75,00*	*112,00*	*112,17*	*10,00*	45
		2.953	4.409	4.416	.394	
710088	S	3.330	5.045	5.050	.800	#
710089★	S	*118,00*	*173,00*	*173,80*	*28,00*	#
		4.646	6.811	6.843	1.102	
710090	S	3.040	6.412	6.418	.658	#
710091&	S	2.700	3.499	3.504	.462	272
710092★	S	*66,00*	*85,00*	*85,12*	*10,00*	41
		2.598	3.346	3.351	.394	
710093★	S	*60,00*	*75,00*	*86,00*	*11,80*	#
		2.362	2.953	3.386	.465	
710094★	S	*65,00*	*82,00*	*82,09*	*8,00*	66
		2.559	3.228	3.232	.315	
710095	S	1.775	–	1.970	.365	#
710096★⬅➡	N	*35,00*	*56,90*	*57,05*	*19,41*	74
		1.378	2.240	2.246	.764	
710097★	S	*42,00*	*56,00*	*56,21*	*6,00*	#
		1.654	2.205	2.213	.236	
710098★	S	*50,00*	*64,10*	*64,19*	*6,50*	71
		1.969	2.524	2.527	.256	
710101⬅➡	S	1.250	2.398	2.402	.228	#
710102	S	1.650	2.410	2.414	.361	#
710103	S	3.142	3.733	3.736	.565	#
710105⬅➡	S	1.705	3.080	3.084	.461	#
710106	S	3.133	3.547	3.551	.366	#
710107★%	S	*52,00*	*77,00*	*78,00*	*9,00*	#
		2.047	3.031	3.071	.354	

For Illustration and Material Data See Technical Section

Designed For A Specific Application - Not Recommended For General Use ➡ Hydrodynamic Lip Design-CW ⬅ Hydrodynamic Lip Design-CCW

⬅➡ Hydrodynamic Lip Design-Bidirectional % External Bore & Flanged O.D.

* The U.S. customer service number is 877-4-TIMKEN. The Canadian customer service numbers are 800-565-4927 (English) and 800-565-0438 (French-Canadian). ★ Metric Seal

710000 SERIES (cont.)

Part No.	Lip Mat'l	Shaft Size	Hsg. Bore	Seal O.D.	Seal Width	Type/ Illus.
710108★	S	*56,00*	*76,00*	*76,12*	*12,30*	66
		2.205	2.992	2.997	.484	
710109★⬅➡	N	*34,00*	*63,00*	*63,09*	*9,00*	40
		1.339	2.480	2.484	.354	
710110★⬅➡	N	*34,00*	*54,00*	*54,25*	*9,00*	40
		1.339	2.126	2.136	.354	
710111★⬅	N	*35,00*	*50,00*	*50,28*	*11,50*	#
		1.378	1.969	1.980	.453	
710112★⬅➡	N	*50,00*	*80,00*	*80,30*	*16,00*	#
		1.969	3.150	3.161	.630	
710113★	S	*40,00*	*75,00*	*75,30*	*12,00*	#
		1.575	2.953	2.965	.472	
710114★➡	N	*41,00*	*59,00*	*59,10*	*10,00*	98
		1.614	2.323	2.327	.394	
710115★⬅➡	S	*44,00*	*80,00*	*80,12*	*8,00*	98
		1.732	3.150	3.154	.315	
710116★	N	*14,00*	*25,00*	*25,20*	*7,00*	32
		.551	.984	.992	.276	
710117★	N	*50,00*	*86,00*	*86,30*	*13,00*	#
		1.969	3.386	3.398	.512	
710118★	S	*39,00*	*59,00*	*59,30*	*11,00*	40
		1.535	2.323	2.335	.433	
710119★	N	*28,00*	*43,00*	*43,23*	*8,00*	32
		1.102	1.693	1.702	.315	
710120★	N	*39,00*	*50,00*	*50,29*	*11,00*	#
		1.535	1.969	1.980	.433	
710121★	N	*59,00*	*100,00*	*100,28*	*10,00*	#
		2.323	3.937	3.948	.394	
710122★	N	*39,00*	*57,00*	*57,20*	*21,50*	40
		1.535	2.244	2.252	.846	
710123★	N	*39,00*	*57,00*	*57,20*	*17,00*	40
		1.535	2.244	2.252	.669	
710124★	N	*33,00*	*59,00*	*59,20*	*17,00*	#
		1.299	2.323	2.331	.669	
710125★	S	*56,00*	*74,00*	*74,20*	*8,00*	#
		2.205	2.913	2.921	.315	
710126★	S	*46,00*	*69,40*	*69,60*	*11,00*	#
		1.811	2.732	2.740	.433	
710127★	S	*55,00*	*68,00*	*68,20*	*8,00*	#
		2.165	2.677	2.685	.315	
710128★	S	*46,00*	*69,40*	*69,60*	*10,00*	#
		1.811	2.732	2.740	.394	
710129★	S	*57,00*	*77,00*	*77,20*	*8,00*	#
		2.244	3.031	3.039	.315	
710130★	S	*64,00*	*77,00*	*77,20*	*8,00*	#
		2.520	3.031	3.039	.315	
710131★	S	*40,00*	*62,00*	*62,20*	*9,00*	#
		1.575	2.441	2.449	.354	
710132★	N	*33,00*	*56,00*	*56,23*	*8,00*	#
		1.299	2.008	2.214	.315	
710133★	N	*42,00*	*90,00*	*90,09*	*9,00*	#
		1.654	3.543	3.547	.354	
710134★	S	*40,00*	*65,00*	*65,20*	*20,00*	#
		1.575	2.559	2.567	.787	
710135★	S	*50,00*	*70,00*	*70,20*	*14,00*	#
		1.969	2.756	2.764	.551	
710136★	S	*58,00*	*75,00*	*75,20*	*7,00*	#
		2.283	2.953	2.961	.276	
710137★	S	*50,00*	*74,00*	*74,20*	*9,00*	#
		1.969	2.913	2.921	.354	
710138★⬅➡	S	*35,00*	*63,00*	*63,20*	*9,00*	40
		1.378	2.480	2.488	.354	
710139★	N	*38,00*	*58,00*	*58,20*	*10,00*	#
		1.496	2.283	2.291	.394	
710140★	S	*40,50*	*58,00*	*58,23*	*8,00*	32
		1.594	2.283	2.293	.315	
710141★⬅	N	*41,00*	*61,00*	*61,20*	*10,00*	#
		1.614	2.402	2.409	.394	
710142★	S	*43,00*	*70,00*	*70,20*	*9,00*	#
		1.693	2.756	2.764	.354	

710000 SERIES (cont.)

Part No.	Lip Mat'l	Shaft Size	Hsg. Bore	Seal O.D.	Seal Width	Type/ Illus.
710143★	S	*47,00*	*84,00*	*84,20*	*11,00*	#
		1.850	3.307	3.315	.433	
710144★⬅	S	*58,00*	*78,00*	*78,20*	*10,00*	#
		2.283	3.071	3.079	.394	
710146★	S	*56,00*	*76,00*	*76,15*	*11,50*	72
		2.205	2.992	2.998	.453	
710147★	S	*40,00*	*60,00*	*60,20*	*8,00*	#
		1.575	2.362	2.370	.315	
710148★	S	*49,00*	*72,20*	*72,50*	*8,00*	97
		1.929	2.843	2.854	.315	
710149★	S	*37,00*	*52,00*	*52,15*	*6,00*	#
		1.457	2.047	2.053	.236	
710150★	S	*47,00*	*80,00*	*80,20*	*12,70*	#
		1.850	3.150	3.157	.500	
710151★	S	*34,00*	*65,00*	*65,10*	*12,00*	47
		1.339	2.559	2.563	.472	
710152★	S	*36,00*	*64,00*	*64,20*	*11,00*	#
		1.417	2.520	2.528	.433	
710153★	S	*26,00*	*44,00*	*44,20*	*8,00*	#
		1.024	1.732	1.740	.315	
710154★	S	*19,00*	*38,00*	*38,20*	*7,00*	32
		.748	1.496	1.504	.276	
710155★	S	*23,00*	*34,00*	*34,23*	*6,50*	35
		.905	1.339	1.348	.256	
710156★	S	*18,00*	*32,00*	*32,10*	*7,00*	#
		.709	1.260	1.264	.276	
710157★➡	S	*28,00*	*43,00*	*43,23*	*7,00*	32
		1.102	1.693	1.702	.276	
710158★	S	*39,00*	*55,00*	*55,11*	*7,50*	40
		1.535	2.165	2.170	.295	
710159★	S	*43,00*	*58,47*	*58,62*	*7,50*	#
		1.693	2.302	2.308	.295	
710160★	S	*45,00*	*66,00*	*66,24*	*7,50*	#
		1.772	2.598	2.608	.295	
710161★	S	*46,00*	*68,50*	*68,70*	*7,50*	#
		1.811	2.697	2.705	.295	
710162	V	1.937	2.750	2.754	.313	48
710163	S	.000	.000	.000	.000	#
710164★	V	*32,00*	*50,00*	*50,14*	*8,00*	48
		1.260	1.969	1.974	.315	
710165★	S	*38,00*	*68,00*	*68,20*	*8,00*	#
		1.496	2.677	2.685	.315	
710166	S	1.399	2.290	2.294	.500	74
710167★	S	*48,00*	*64,00*	*64,20*	*14,00*	#
		1.890	2.520	2.528	.551	
710168★	S	*59,00*	*75,00*	*75,11*	*10,00*	47
		2.323	2.953	2.957	.394	
710169★	S	*56,00*	*67,00*	*67,20*	*6,00*	#
		2.205	2.638	2.646	.236	
710170★	S	*61,00*	*88,00*	*88,00*	*7,00*	#
		2.402	3.465	3.465	.276	
710171	N	2.200	2.804	–	.300	#
710172★	V	*31,00*	*42,00*	*42,20*	*8,00*	35
		1.220	1.654	1.661	.315	
710173★	N	*50,00*	*70,00*	*70,20*	*10,00*	#
		1.969	2.756	2.764	.394	
710174	S	2.748	3.881	3.885	.464	47
710175★	S	*53,00*	*68,20*	*68,48*	*7,00*	32
		2.087	2.685	2.696	.276	
710176★	S	*56,00*	*74,00*	*74,14*	*8,50*	87
		2.205	2.913	2.919	.335	
710178★	S	*35,00*	*49,00*	*49,30*	*8,00*	#
		1.378	1.929	1.941	.315	
710179★➡	S	*42,00*	*64,80*	*65,00*	*13,50*	32
		1.654	2.551	2.555	.531	
710180⬅	V	3.250	3.879	3.881	.375	47
710181	S	1.125	1.630	1.634	.313	#
710182★	S	*60,00*	*86,00*	*86,10*	*7,00*	66
		2.362	3.386	3.390	.276	

For Illustration and Material Data See Technical Section
Designed For A Specific Application - Not Recommended For General Use ➡ Hydrodynamic Lip Design-CW ⬅ Hydrodynamic Lip Design-CCW
⬅➡ Hydrodynamic Lip Design-Bidirectional ★ Metric Seal

710000 SERIES (cont.)

Part No.	Lip Mat'l	Shaft Size	Hsg. Bore	Seal O.D.	Seal Width	Type/ Illus.
710183★	S	58,00	76,00	76,10	6,50	66
		2.283	2.992	2.996	.256	
710186★	S	42,00	56,30	56,44	8,00	#
		1.654	2.216	2.222	.315	
710187★➡	N	52,00	70,00	70,27	8,50	32
		2.047	2.756	2.766	.335	
710188★⬅	V	88,00	106,00	106,28	8,50	32
		3.465	4.173	4.184	.335	
710189★⬅	V	89,00	105,00	105,20	10,00	47
		3.504	4.134	4.142	.394	
710190★	V	52,00	68,00	68,15	8,00	32
		2.047	2.677	2.683	.315	
710191★	S	47,00	64,00	64,08	7,00	25
		1.850	2.520	2.523	.276	
710192★	S	50,00	60,00	60,25	6,00	32
		1.969	2.362	2.372	.236	
710193★	S	45,00	59,00	59,28	7,50	32
		1.772	2.323	2.334	.295	
710194★	S	50,00	68,00	68,27	7,00	32
		1.969	2.677	2.688	.276	
710195★	S	42,00	76,00	76,28	12,00	40
		1.654	2.992	3.003	.472	
710196★	V	40,00	62,00	62,27	10,00	32
		1.575	2.441	2.452	.394	
710197★	N	36,00	54,00	54,28	7,00	40
		1.417	2.126	2.137	.276	
710198	S	1.565	2.372	2.382	.394	#
710199★⬅➡	N	35,00	54,00	54,10	9,00	#
		1.378	2.126	2.130	.354	

710200 SERIES

Part No.	Lip Mat'l	Shaft Size	Hsg. Bore	Seal O.D.	Seal Width	Type/ Illus.
710201★	S	35,00	60,00	60,30	12,00	47
		1.378	2.362	2.374	.472	
710202	S	1.628	2.122	2.126	.343	#
710203★	S	54,00	81,99	82,17	8,00	66
		2.126	3.228	3.235	.315	
710204	S	1.625	2.282	2.286	.313	48
710205★⬅	V	96,00	117,00	117,28	12,00	32
		3.780	4.606	4.617	.472	
710207★	S	42,00	72,00	72,28	10,00	40
		1.654	2.835	2.846	.394	
710208★	S	44,00	92,00	92,28	12,50	#
		1.732	3.622	3.633	.492	
710209★	N	38,00	62,00	62,24	13,00	#
		1.496	2.441	2.450	.512	
710210	V	2.375	3.251	3.256	.625	74
710211➡	N	1.875	2.677	2.681	.375	74
710213★	S	62,00	78,00	78,10	7,00	281
		2.441	3.071	3.075	.276	
710214★	N	39,00	59,00	59,28	11,00	40
		1.535	2.323	2.334	.433	
710215★	S	47,00	66,00	66,10	11,00	66
		1.850	2.598	2.602	.433	
710216★	S	28,00	42,50	42,72	8,00	35
		1.102	1.673	1.682	.315	
710217★	S	35,00	54,00	54,10	8,00	#
		1.378	2.126	2.130	.315	
710218★	V	35,00	56,00	56,10	16,00	#
		1.378	2.205	2.209	.630	
710219★⬅	N	90,00	108,00	108,23	10,00	32
		3.543	4.252	4.261	.394	
710220★➡	N	41,00	62,00	62,23	9,00	32
		1.614	2.441	2.450	.354	
710221★	N	42,00	56,00	56,10	14,00	#
		1.654	2.205	2.209	.551	
710222★	S	18,00	26,00	26,10	4,00	98
		.709	1.024	1.028	.157	
710223★	S	44,00	66,00	66,10	6,00	#
		1.732	2.598	2.602	.236	

710200 SERIES (cont.)

Part No.	Lip Mat'l	Shaft Size	Hsg. Bore	Seal O.D.	Seal Width	Type/ Illus.
710224★	S	38,00	62,00	62,10	6,00	49
		1.496	2.441	2.445	.236	
710225★	S	57,00	80,00	80,10	8,00	#
		2.244	3.150	3.154	.315	
710226★	S	50,00	65,30	65,53	8,00	32
		1.969	2.571	2.580	.315	
710227★	S	40,00	62,00	62,30	6,50	#
		1.575	2.441	2.453	.256	
710228★	S	37,00	62,00	62,23	10,00	40
		1.457	2.441	2.450	.394	
710229★	S	59,00	78,30	78,55	8,00	40
		2.323	3.083	3.093	.315	
710230★	S	58,00	76,00	76,23	7,80	#
		2.283	2.992	3.001	.307	
710231★	S	59,00	78,30	78,55	8,00	32
		2.323	3.083	3.093	.315	
710232★⬅	V	86,00	104,00	104,23	11,00	32
		3.386	4.094	4.104	.433	
710233★➡	N	38,50	53,00	53,23	8,00	32
		1.516	2.087	2.096	.315	
710234★⬅	N	68,00	84,00	84,23	8,50	32
		2.677	3.307	3.316	.335	
710235★⬅	V	86,00	103,00	103,23	10,00	32
		3.386	4.055	4.064	.394	
710236★➡	N	33,00	49,00	49,23	8,00	32
		1.299	1.929	1.938	.315	
710237★⬅	V	90,00	104,00	104,10	11,00	32
		3.543	4.094	4.098	.433	
710238★➡	S	46,00	70,00	70,10	8,00	32
		1.811	2.756	2.760	.315	
710239★	N	54,00	69,00	69,23	7,00	40
		2.126	2.717	2.726	.276	
710240★%	S	75,00	83,00	87,00	4,00	#
		2.953	3.268	3.425	.157	
710241	S	1.628	2.278	2.282	.343	68
710242★➡	N	52,00	72,00	72,28	8,00	32
		2.047	2.835	2.846	.315	
710243★	S	16,00	26,00	26,10	7,00	25
		.630	1.024	1.028	.276	
710244★	S	42,00	56,50	56,70	8,00	#
		1.654	2.224	2.232	.315	
710245★➡	N	42,00	76,00	76,10	14,00	#
		1.654	2.992	2.996	.551	
710246★	N	42,00	90,00	90,28	12,00	#
		1.654	3.543	3.554	.472	
710247	N	1.503	1.937	1.950	.475	#
710248★➡	N	45,00	78,00	78,10	11,00	66
		1.772	3.071	3.075	.433	
710249★	S	20,00	26,00	26,20	4,00	97
		.787	1.024	1.031	.157	
710250★	N	34,50	71,00	71,10	42,00	#
		1.358	2.795	2.799	1.654	
710251★	N	17,00	34,00	34,10	7,90	47
		.669	1.339	1.343	.311	
710252★	S	36,00	44,00	44,23	5,00	32
		1.417	1.732	1.741	.197	
710253★%	S	52,00	62,00	63,00	5,50	#
		2.047	2.441	2.480	.217	
710254★	S	23,00	31,80	32,00	5,50	34
		.905	1.252	1.260	.217	
710255★	S	48,00	70,00	70,20	9,00	#
		1.890	2.756	2.764	.354	
710256★	S	64,00	76,00	76,20	7,00	#
		2.520	2.992	3.000	.276	
710258★⬅	V	115,00	135,00	135,20	10,00	32
		4.528	5.315	5.323	.394	
710259★⬅➡	V	37,00	56,00	56,20	12,50	32
		1.457	2.205	2.213	.492	
710260★⬅	S	45,00	61,00	61,20	8,00	32
		1.811	2.756	2.764	.315	

For Illustration and Material Data See Technical Section
Designed For A Specific Application - Not Recommended For General Use ➡ Hydrodynamic Lip Design-CW ⬅ Hydrodynamic Lip Design-CCW
⬅➡ Hydrodynamic Lip Design-Bidirectional % External Bore ★ Metric Seal

710200 SERIES (cont.)

Part No.	Lip Mat'l	Shaft Size	Hsg. Bore	Seal O.D.	Seal Width	Type/ Illus.
710261★➡	V	16,00	56,00	56,20	6,50	32
		.630	2.205	2.213	.256	
710262★⬅	V	96,00	116,00	116,26	9,00	32
		3.780	4.567	4.577	.354	
710263➡	V	2.000	2.623	2.627	.256	47
710264★➡	H	43,00	55,00	55,20	8,00	32
		1.693	2.165	2.173	.236	
710265★	N	51,00	66,00	66,20	6,50	35
		2.008	2.598	2.606	.256	
710266★	S	93,00	154,00	154,10	8,00	#
		3.661	6.063	6.067	.315	
710267★	S	30,00	54,00	54,20	9,00	32
		1.181	2.126	2.134	.354	
710268★⬅	N	58,00	103,00	103,20	11,00	40
		2.283	4.055	4.063	.433	
710270★	N	45,00	72,00	72,20	12,00	32
		1.772	2.835	2.843	.472	
710271★⬅	S	58,00	74,00	74,20	10,00	32
		2.283	2.913	2.921	.394	
710272★	N	18,70	35,00	35,20	7,00	32
		.736	1.378	1.386	.276	
710273★	S	19,00	35,00	35,23	10,00	35
		.748	1.378	1.387	.394	
710274	V	.610	1.102	1.106	.600	#
710275★⬅	N	68,00	124,00	124,10	12,00	40
		2.677	4.882	4.886	.472	
710276★⬅➡	N	60,00	103,00	103,10	12,00	40
		2.362	4.055	4.059	.472	
710277★	N	64,00	132,00	132,10	13,00	#
		2.520	5.197	5.201	.512	
710278★	N	100,00	145,00	145,10	26,00	#
		3.937	5.709	5.713	1.024	
710279★	V	55,00	70,00	70,20	8,00	32
		2.165	2.756	2.764	.315	
*710280★	V	20,00	35,00	35,20	7,00	32
		.787	1.378	1.386	.276	
710281	S	1.940	2.900	2.910	.400	74
710282★	S	32,00	42,00	42,20	8,00	32
		1.260	1.654	1.661	.315	
710283★	N	44,00	90,00	90,10	9,00	#
		1.732	3.543	3.547	.354	
710284★	N	40,00	73,00	73,10	10,00	#
		1.575	2.874	2.878	.394	
710285	S	1.125	1.630	1.634	.313	#
710286★⬅➡	N	42,00	67,00	67,20	10,00	32
		1.654	2.638	2.646	.394	
710287★⬅➡	N	40,00	54,00	54,20	10,00	32
		1.575	2.126	2.134	.394	
710288★⬅	S	93,00	114,00	114,20	14,00	32
		3.661	4.488	4.496	.551	
710289★➡	S	45,00	67,00	67,20	8,00	32
		1.772	2.638	2.646	.315	
710290★⬅	V	100,00	124,00	124,20	13,00	32
		3.937	4.882	4.890	.512	
710291★⬅	N	41,00	63,00	63,20	9,00	40
		1.614	2.480	2.488	.354	
710292★	S	52,00	68,00	68,10	6,50	#
		2.047	2.677	2.681	.256	
710293★	S	81,50	89,80	–	2,50	#
		3.209	3.535	–	.098	
710294★	S	84,00	100,00	100,10	10,00	47
		3.307	3.937	3.941	.394	
710295★	S	106,00	123,00	123,10	11,00	47
		4.173	4.843	4.846	.433	
710296★	S	48,00	108,50	108,70	13,00	#
		1.890	4.272	4.280	.512	
710297★	S	18,00	23,00	23,20	4,00	34
		.709	.906	.913	.157	
710298★➡	N	42,00	63,00	63,20	9,00	40
		1.654	2.480	2.488	.354	

710200 SERIES (cont.)

Part No.	Lip Mat'l	Shaft Size	Hsg. Bore	Seal O.D.	Seal Width	Type/ Illus.
710299★	N	17,50	27,50	27,70	7,00	#
		.689	1.083	1.091	.276	

710300 SERIES

Part No.	Lip Mat'l	Shaft Size	Hsg. Bore	Seal O.D.	Seal Width	Type/ Illus.
710300★	S	40,00	56,00	56,20	9,00	#
		1.575	2.205	2.213	.354	
710301★	S	42,00	62,00	62,20	7,00	97
		1.654	2.441	2.449	.276	
710302	S	.000	1.654	1.661	.315	#
710303★	S	25,50	38,50	38,70	8,50	35
		1.004	1.516	1.524	.335	
710304	S	1.479	2.563	2.567	.470	#
710305★&	S	49,00	70,00	70,10	12,50	#
		1.929	2.756	2.760	.492	
710306★⬅	S	32,00	52,00	52,20	10,00	32
		1.260	2.047	2.055	.394	
710307★⬅	N	25,00	40,00	40,20	7,00	32
		.984	1.575	1.583	.276	
710308★➡	S	40,00	52,00	52,20	6,00	32
		1.575	2.047	2.055	.236	
710309★	S	38,00	52,00	52,20	6,00	#
		1.496	2.047	2.055	.236	
710310★➡	N	32,00	47,00	47,20	6,00	32
		1.260	1.850	1.858	.236	
710311★	S	40,00	54,00	54,10	8,00	25
		1.575	2.126	2.130	.315	
710312★	S	52,00	68,00	68,20	13,00	32
		2.047	2.677	2.685	.512	
710313★➡	S	48,00	70,00	70,20	12,00	32
		1.890	2.756	2.764	.472	
710314★⬅	N	35,00	56,00	56,20	8,00	40
		1.378	2.205	2.213	.315	
710315★➡	S	35,00	56,00	56,20	8,00	40
		1.378	2.205	2.213	.315	
710316★➡	S	25,00	40,00	40,20	8,00	32
		.984	1.575	1.583	.315	
710317★⬅	S	32,00	48,00	48,20	10,00	32
		1.260	1.890	1.898	.394	
710318★➡	N	38,50	58,00	58,20	8,50	32
		1.516	2.283	2.291	.335	
710319★	S	38,00	58,00	58,10	11,00	47
		1.496	2.283	2.287	.433	
710320★	S	47,00	62,00	62,10	9,00	48
		1.850	2.441	2.445	.354	
710321★	S	45,00	62,00	62,10	9,00	47
		1.772	2.441	2.445	.354	
710322★	S	48,00	62,00	62,20	6,00	34
		1.890	2.441	2.449	.236	
710323★	S	51,00	63,00	63,20	8,50	49
		2.008	2.480	2.488	.335	
710324★⬅	S	35,00	50,00	50,20	11,00	32
		1.378	1.969	1.976	.433	
710325★➡	S	28,00	40,00	40,20	7,00	32
		1.102	1.575	1.583	.276	
710326★	S	40,00	64,00	64,10	12,00	66
		1.575	2.520	2.524	.472	
710327★➡	S	32,00	48,00	48,20	7,00	32
		1.260	1.890	1.898	.276	
710328★	S	33,00	50,00	50,20	7,00	35
		1.299	1.969	1.976	.276	
710329★⬅	H	35,00	50,00	50,20	8,00	32
		1.378	1.969	1.976	.315	
710330★	N	85,00	113,00	113,20	10,50	#
		3.346	4.449	4.457	.413	
710331★⬅	V	35,00	54,00	54,20	8,00	32
		1.378	2.126	2.134	.315	
710332★⬅	N	31,00	46,00	46,20	8,00	32
		1.220	1.811	1.819	.315	
710333★⬅	S	60,00	80,00	80,20	8,00	32
		2.362	3.150	3.157	.315	

For Illustration and Material Data See Technical Section
Designed For A Specific Application - Not Recommended For General Use ➡ Hydrodynamic Lip Design-CW ⬅ Hydrodynamic Lip Design-CCW
⬅➡ Hydrodynamic Lip Design-Bidirectional & Flanged O.D.
* The U.S. customer service number is 877-4-TIMKEN. The Canadian customer service numbers are 800-565-4927 (English) and 800-565-0438 (French-Canadian). ★ Metric Seal

710300 SERIES (cont.)

Part No.	Lip Mat'l	Shaft Size	Hsg. Bore	Seal O.D.	Seal Width	Type/ Illus.
710334★⬅	N	68,00	86,00	86,20	8,00	32
		2.677	3.386	3.394	.315	
710335★	S	35,00	65,00	65,20	12,00	32
		1.378	2.559	2.567	.472	
710336★⬅	N	35,00	68,00	68,20	9,00	40
		1.378	2.677	2.685	.354	
710337★	S	47,00	72,20	72,40	6,00	34
		1.850	2.843	2.850	.236	
710338★	S	39,00	52,00	52,10	6,00	66
		1.535	2.047	2.051	.236	
710339★	S	70,00	112,00	112,10	14,00	25
		2.756	4.409	4.413	.551	
710340★	V	30,20	42,00	42,10	6,00	44
		1.189	1.654	1.657	.236	
710341★⬅	S	36,00	50,00	50,20	8,00	32
		1.417	1.969	1.976	.315	
710342★➡	S	20,00	47,00	47,20	8,50	32
		.787	1.850	1.858	.335	
710343★	S	36,00	46,00	46,10	9,00	33
		1.417	1.811	1.815	.354	
710344★	S	17,40	30,00	30,20	7,00	32
		.685	1.181	1.189	.276	
710345★➡	S	45,00	68,00	68,20	12,00	32
		1.772	2.677	2.685	.472	
710346★	S	15,00	20,00	20,10	5,00	49
		.591	.787	.791	.197	
710347★⬅	S	28,00	38,00	38,20	10,00	32
		1.102	1.496	1.504	.394	
710348★	S	13,00	22,00	22,20	6,00	32
		.512	.866	.874	.236	
710349★⬅	V	105,00	135,00	135,20	14,50	#
		4.134	5.315	5.323	.571	
710350★➡	V	60,00	82,00	82,20	12,00	#
		2.362	3.228	3.236	.472	
710351★⬅	H	100,00	135,00	135,20	10,00	32
		3.937	5.315	5.323	.394	
710352★⬅	V	95,00	113,00	113,10	10,00	47
		3.740	4.449	4.453	.394	
710353★➡	S	37,00	58,00	58,10	10,00	66
		1.457	2.283	2.287	.394	
710354★➡	N	50,00	65,00	65,20	8,00	32
		1.969	2.559	2.567	.315	
710355★➡	N	37,00	50,50	50,70	7,00	32
		1.457	1.988	1.996	.276	
710356★➡	S	48,00	60,00	60,20	9,00	32
		1.890	2.362	2.370	.354	
710357★	S	50,00	67,00	67,20	9,00	47
		1.969	2.638	2.646	.354	
* 710358	N	1.625	2.374	2.378	.500	45
710359★⬅	S	30,00	45,00	45,20	8,00	#
		1.181	1.772	1.780	.315	
710360★	S	35,00	72,00	72,28	10,00	35
		1.378	2.835	2.846	.394	
710361★	S	17,00	20,80	20,90	3,10	44
		.669	.819	.823	.122	
710362★	S	17,00	25,00	25,10	5,00	49
		.669	.984	.988	.197	
710363★⬅	V	84,00	118,00	118,10	7,00	#
		3.307	4.646	4.650	.276	
710364★	N	45,00	98,00	98,10	10,50	#
		1.772	3.858	3.862	.413	
710365%	S	2.000	2.720	–	.210	#
710366★⬅	H	106,00	126,00	126,20	12,00	32
		4.173	4.961	4.969	.472	
710367★➡	S	65,00	88,00	88,20	12,00	40
		2.559	3.465	3.472	.472	
710368★	S	138,00	152,00	152,10	12,00	47
		5.433	5.984	5.988	.472	
710369★	S	145,00	164,00	164,10	14,00	47
		5.709	6.457	6.461	.551	

710300 SERIES (cont.)

Part No.	Lip Mat'l	Shaft Size	Hsg. Bore	Seal O.D.	Seal Width	Type/ Illus.
710370★	S	32,00	43,00	43,20	7,00	32
		1.260	1.693	1.701	.276	
710371★	S	101,00	114,00	114,10	10,00	25
		3.976	4.488	4.492	.394	
710372★	S	115,00	156,00	156,10	28,00	#
		4.528	6.142	6.146	1.102	
710373★	S	65,00	85,00	85,10	10,00	47
		2.559	3.346	3.350	.394	
710374★	S	49,00	100,00	100,20	8,00	#
		1.929	3.937	3.945	.315	
710375★	S	76,00	102,00	102,20	9,50	#
		2.992	4.016	4.024	.374	
710376★	S	75,00	112,00	112,10	10,00	#
		2.953	4.409	4.413	.394	
710377★	S	46,00	94,50	94,70	8,00	#
		1.811	3.720	3.728	.315	
710378★	S	68,00	82,00	82,20	7,00	35
		2.677	3.228	3.236	.276	
710379★	S	60,00	72,00	72,10	7,50	47
		2.362	2.835	2.839	.295	
710380★	S	130,00	150,00	150,10	10,00	47
		5.118	5.906	5.909	.394	
710381★%	S	124,00	170,00	–	14,50	#
		4.882	6.693	–	.571	
710382★	S	56,00	66,00	66,20	17,00	#
		2.205	2.598	2.606	.669	
710383★	S	35,00	44,00	44,10	7,00	47
		1.378	1.732	1.736	.276	
710384★	S	75,00	100,00	100,10	13,00	25
		2.953	3.937	3.941	.512	
710385	S	1.675	2.000	2.175	.200	#
710386★➡	H	42,00	56,00	56,20	7,00	32
		1.654	2.205	2.213	.276	
710387★	S	43,00	65,04	65,14	9,50	47
		1.693	2.561	2.565	.374	
710388➡	S	1.875	2.716	2.725	.394	32
710389	S	1.750	2.500	2.504	.484	7S
710390★➡	N	60,00	82,00	82,20	10,00	32
		2.362	3.228	3.236	.394	
710391★⬅	H	100,00	135,00	135,20	15,00	94
		3.937	5.315	5.323	.591	
710392★	S	62,00	74,00	74,10	7,00	#
		2.441	2.913	2.917	.276	
710393★	S	56,00	72,00	72,20	8,00	#
		2.205	2.835	2.843	.315	
710394★	S	46,00	62,00	62,20	20,50	#
		1.811	2.441	2.449	.807	
710395	S	2.750	3.779	3.784	.762	06
710396★⬅➡	S	35,00	56,00	56,20	9,00	40
		1.378	2.205	2.213	.354	
710397★	N	46,50	90,00	90,20	12,00	#
		1.831	3.543	3.551	.472	
710398★	S	50,00	72,00	72,20	10,00	#
		1.969	2.835	2.843	.394	
710399★➡	S	26,00	42,00	42,20	8,00	32
		1.024	1.654	1.661	.315	

710400 SERIES

Part No.	Lip Mat'l	Shaft Size	Hsg. Bore	Seal O.D.	Seal Width	Type/ Illus.
710400★	S	58,00	75,00	75,10	9,00	47
		2.283	2.953	2.957	.354	
710401★	S	30,00	37,00	37,30	3,50	#
		1.181	1.457	1.461	.138	
710402★	S	41,00	68,00	68,20	13,00	#
		1.614	2.677	2.685	.512	
710403★	S	42,00	62,00	62,10	12,00	#
		1.654	2.441	2.445	.472	
710404★	S	39,00	54,00	54,10	6,00	49
		1.535	2.126	2.130	.236	
710405★	S	124,00	146,00	146,10	14,00	47
		4.882	5.748	5.752	.551	

For Illustration and Material Data See Technical Section
Designed For A Specific Application - Not Recommended For General Use ➡ Hydrodynamic Lip Design-CW ⬅ Hydrodynamic Lip Design-CCW
⬅➡ Hydrodynamic Lip Design-Bidirectional % External Bore
* The U.S. customer service number is 877-4-TIMKEN. The Canadian customer service numbers are 800-565-4927 (English) and 800-565-0438 (French-Canadian). ★ Metric Seal

710400 SERIES (cont.)

Part No.	Lip Mat'l	Shaft Size	Hsg. Bore	Seal O.D.	Seal Width	Type/ Illus.
710406★	S	*140,00*	*170,00*	*170,10*	*14,00*	47
		5.512	6.693	6.697	.551	
710407★	S	*51,00*	*62,00*	*62,10*	*7,00*	33
		2.008	2.441	2.445	.276	
710408★	N	*42,00*	*62,00*	*62,20*	*8,00*	32
		1.654	2.441	2.449	.315	
710409%	S	1.813	2.408	–	.300	#
710410★	S	*100,00*	*114,00*	*114,10*	*12,00*	47
		3.937	4.488	4.492	.472	
710411★	S	*128,00*	*146,00*	*146,10*	*10,00*	47
		5.039	5.748	5.752	.394	
710412★	S	*18,00*	*34,00*	*34,20*	*8,00*	32
		.709	1.339	1.346	.315	
710413	N	2.172	3.125	3.130	.675	#
710414	T	1.500	2.500	2.500	.375	#
710415★➡	S	*32,00*	*50,00*	*50,23*	*8,00*	32
		1.260	1.969	1.978	.315	
710416★	S	*34,00*	*48,00*	*48,28*	*7,50*	35
		1.339	1.890	1.901	.295	
710417★	N	*34,00*	*50,00*	*50,20*	*8,00*	35
		1.339	1.969	1.976	.315	
710418★	N	*34,00*	*53,00*	*53,28*	*8,00*	32
		1.339	2.087	2.098	.315	
710419★	S	*35,00*	*63,00*	*63,28*	*10,00*	#
		1.378	2.480	2.491	.394	
710420★➡	S	*50,00*	*68,00*	*68,20*	*9,00*	32
		1.969	2.677	2.685	.354	
710422★	S	*34,00*	*62,00*	*62,20*	*10,00*	35
		1.339	2.441	2.449	.394	
710424★	S	*35,00*	*60,00*	*60,23*	*10,00*	35
		1.378	2.362	2.371	.394	
710425	S	5.428	6.500	6.505	.420	230
710426	S	1.465	2.372	2.374	.433	#
710428	V	1.750	2.621	2.625	.937	87
710429	V	1.380	2.288	2.291	.750	87
710430&	S	2.325	3.125	3.130	.313	#
710431	S	1.693	2.480	2.488	.394	#
710432★	S	*40,00*	*57,00*	*57,20*	*10,00*	32
		1.575	2.244	2.252	.394	
710433	S	1.102	2.087	2.091	.378	#
710435★	S	*38,00*	*65,00*	*65,20*	*8,00*	32
		1.496	2.559	2.567	.315	
710436★➡	N	*40,50*	*52,50*	*52,70*	*6,00*	35
		1.594	2.067	2.075	.236	
710437★	S	*50,00*	*75,00*	*75,10*	*9,00*	47
		1.969	2.953	2.957	.354	
710438★	S	*54,00*	*76,00*	*76,20*	*14,00*	#
		2.126	2.992	3.000	.551	
710439★	S	*58,00*	*73,00*	*73,10*	*8,50*	#
		2.283	2.874	2.878	.335	
710440★	S	*68,00*	*90,00*	*90,10*	*12,00*	47
		2.677	3.543	3.547	.472	
710441&	N	1.465	2.372	2.374	1.508	#
710442★➡	N	*42,00*	*59,00*	*59,10*	*7,00*	48
		1.654	2.323	2.327	.276	
710443★	N	*40,00*	*54,89*	*55,00*	*13,00*	#
		1.575	2.161	2.165	.512	
710444★⬅	S	*40,00*	*53,90*	*54,00*	*6,00*	32
		1.575	2.122	2.126	.236	
710445★	S	*19,00*	*34,93*	*35,00*	*8,00*	35
		.748	1.375	1.378	.315	
710446★➡	S	*68,00*	*88,00*	*88,20*	*8,00*	35
		2.677	3.465	3.472	.315	
710447	N	2.000	2.750	2.754	.325	47
710450	N	.787	1.260	1.268	.197	32
710451	N	1.535	.000	2.094	.315	32
710452	V	1.875	3.160	3.165	.530	72
710453	N	1.890	2.810	.000	.700	#
710454	V	3.543	.000	4.724	.630	#
710455	S	1.312	1.627	.000	.331	#

710400 SERIES (cont.)

Part No.	Lip Mat'l	Shaft Size	Hsg. Bore	Seal O.D.	Seal Width	Type/ Illus.
710456	S	2.835	.000	3.709	.409	#
710457	V	3.000	4.003	4.008	.312	86
⋆710500	S	6.110	7.187	7.192	.400	230
710501	S	1.850	.000	2.440	.405	#
710502	S	1.688	.000	2.551	.595	#
710504	S	1.142	.000	1.457	.197	35
710505	S	1.575	.000	2.293	.236	32
710506	S	2.088	.000	2.777	.500	86
710507	S	2.088	.000	2.915	.500	71
710508	S	2.324	.000	3.546	.591	71
710509	S	1.496	.000	2.362	.433	#
710510	N	1.497	.000	2.226	.472	#
710511	V	1.044	.000	1.713	.275	32
710512	N	1.594	.000	2.291	.354	40
710513	V	1.694	.000	2.462	.433	#
710514	S	3.506	.000	4.117	.453	41
710515	T	1.340	.000	1.910	.275	32
710516	S	1.181	.000	2.409	.354	#
710517	S	1.654	2.283	2.291	.472	#
710519	S	2.561	.000	3.979	.532	#
710520	V	3.800	.000	4.590	.394	32
710521	V	1.790	.000	2.488	.275	32
710522	S	2.087	.000	2.805	.354	35
710523	S	1.575	.000	2.835	.433	#
710524	S	1.457	.000	2.186	.315	47
710525	S	1.732	2.913	2.921	.433	#
710526	V	3.950	.000	4.689	.370	32
710527	S	2.047	.000	2.717	.583	#
710528	S	2.402	.000	3.071	.531	#
710529	S	1.969	2.571	2.583	.315	#
710562	S	6.775	7.875	7.880	.360	230
710800	S	9.466	10.875	10.891	.375	230
710925	S	11.006	12.875	12.891	.625	230
710928	N	1.938	2.680	.000	.500	#

711000 SERIES

Part No.	Lip Mat'l	Shaft Size	Hsg. Bore	Seal O.D.	Seal Width	Type/ Illus.
711000	S	11.586	13.687	13.703	.562	230
711181	V	1.614	2.205	.000	.315	32
711200	S	13.797	15.500	15.516	.437	230
711552	N	1.552	2.502	2.506	.312	47
711553⬅➡	N	2.375	3.875	3.881	1.060	74

712000 SERIES

Part No.	Lip Mat'l	Shaft Size	Hsg. Bore	Seal O.D.	Seal Width	Type/ Illus.
712000	N	3.000	5.750	5.764	.413	#
712001★➡	N	*30,00*	*46,00*	*46,30*	*8,00*	32
		1.181	1.811	1.823	.315	
712003★⬅	V	*120,00*	*140,00*	*140,30*	*13,00*	32
		4.724	5.512	5.524	.512	
712004★⬅	V	*105,00*	*130,00*	*130,25*	*12,00*	32
		4.134	5.118	5.128	.472	
712005★➡	H	*65,00*	*84,00*	*84,30*	*9,00*	32
		2.559	3.307	3.319	.354	
712006★⬅	H	*60,00*	*82,00*	*82,20*	*12,00*	32
		2.362	3.228	3.236	.472	
712007★	V	*25,00*	*35,00*	*35,25*	*7,00*	32
		.984	1.378	1.388	.276	
712008★	H	*28,00*	*42,00*	*42,20*	*8,00*	32
		1.102	1.654	1.661	.315	
712009★	V	*27,00*	*40,00*	*40,20*	*8,00*	32
		1.063	1.575	1.583	.315	
712010★➡	H	*48,00*	*70,00*	*70,25*	*9,00*	32
		1.890	2.756	2.766	.354	
712011★	S	*40,00*	*75,00*	*75,20*	*12,00*	32
		1.575	2.953	2.961	.472	
712012	V	.984	1.752	1.756	.313	#
712013	S	1.000	1.752	1.756	.313	#
712014	S	.750	1.250	1.254	.375	#
712015	V	.875	1.375	1.379	.250	#
712016	S	1.000	1.499	1.503	.250	#

For Illustration and Material Data See Technical Section

Designed For A Specific Application - Not Recommended For General Use ➡ Hydrodynamic Lip Design-CW ⬅ Hydrodynamic Lip Design-CCW

⬅➡ Hydrodynamic Lip Design-Bidirectional % External Bore & Flanged O.D.

⋆ The U.S. customer service number is 877-4-TIMKEN. The Canadian customer service numbers are 800-565-4927 (English) and 800-565-0438 (French-Canadian). ★ Metric Seal

Part No.	Lip Mat'l	Shaft Size	Hsg. Bore	Seal O.D.	Seal Width	Type/ Illus.
712000 SERIES (cont.)						
712017	S	.625	1.124	1.128	.375	#
712018★	S	*24,99*	*40,54*	*40,64*	*6,35*	#
		.984	1.596	1.600	.250	
712019	S	.500	.875	.879	.313	#
712020★⬅	N	*40,00*	*75,00*	*75,26*	*18,00*	32
		1.575	2.953	2.963	.709	
712021	S	.312	.749	.753	.250	#
712022	S	.312	.686	.690	.313	#
712023	V	1.500	2.311	2.315	.500	#
712024	S	.625	1.124	1.128	.375	#
712025	S	1.250	1.750	1.754	.250	#
712026	S	1.000	1.375	1.379	.250	#
712027	S	.750	1.250	1.254	.250	#
712028	S	.562	.750	.754	.094	#
712100 SERIES						
712100⬅	T	3.125	3.750	3.768	.437	PDW
712101➡	T	2.625	3.375	3.390	.375	FW-H
712102➡	T	1.875	2.625	2.640	.433	FW-H
712103➡	T	2.625	3.516	3.533	.394	PDW
712104★➡	T	*28,00*	*38,00*	*38,25*	*7,00*	PDW
		1.102	1.496	1.506	.276	
*712105★⬅	T	*100,00*	*120,00*	*120,25*	*11,00*	W
		3.937	4.724	4.734	.433	
712106★	T	*120,00*	*140,00*	*140,20*	*13,00*	32
		4.724	5.512	5.520	.512	
712107★➡	T	*105,00*	*130,00*	*130,16*	*11,00*	FW-H
		4.134	5.118	5.124	.433	
712108★➡	T	*68,00*	*90,00*	*90,15*	*10,00*	FW-H
		2.677	3.543	3.549	.394	
712109★⬅	T	*127,00*	*152,40*	*152,80*	*15,00*	FW-H
		5.000	6.000	6.016	.591	
712110★⬅	T	*156,00*	*180,00*	*180,20*	*15,00*	W
		6.142	7.087	7.094	.591	
712111★➡	T	*80,00*	*100,00*	*100,40*	*10,00*	FW-H
		3.150	3.937	3.953	.394	
712112★⬅	T	*110,00*	*130,00*	*130,40*	*13,00*	W
		4.331	5.118	5.134	.512	
712113★➡	T	*60,00*	*75,00*	*75,50*	*10,00*	FW-H
		2.362	2.953	2.972	.394	
712114★⬅	T	*130,00*	*150,00*	*150,40*	*13,00*	FW-H
		5.118	5.906	5.921	.512	
712115★➡	T	*80,00*	*100,00*	*100,40*	*13,00*	FW-H
		3.150	3.937	3.953	.512	
712116➡	T	3.500	4.331	4.346	.472	FW-H
712118★⬅	T	*160,00*	*190,00*	*190,40*	*13,00*	FW-H
		6.299	7.480	7.496	.512	
712119★➡	T	*94,90*	*120,00*	*120,40*	*13,00*	FW-H
		3.736	4.724	4.740	.512	
712120★➡	T	*80,00*	*100,00*	*100,40*	*13,00*	FW-H
		3.150	3.937	3.953	.512	
*712121	T	2.500	3.500	3.510	.475	#
712122★⬅	T	*156,00*	*180,00*	*180,40*	*15,00*	FW-H
		6.142	7.087	7.102	.591	
712123★➡	T	*80,00*	*100,00*	*100,40*	*13,00*	FW-H
		3.150	3.937	3.953	.512	
712124★➡	T	*90,00*	*110,00*	*110,40*	*12,00*	FW-H
		3.543	4.331	4.346	.472	
712125★➡	T	*54,00*	*73,00*	*73,40*	*12,75*	FW-H
		2.126	2.874	2.890	.502	
712126⬅	T	3.110	3.898	3.913	.378	FW-H
*712127	S	.622	1.559	1.567	.453	32
*712128	S	.593	1.000	1.008	.203	32
*712129	F	1.562	2.094	2.098	.312	#
*712130	S	3.500	6.000	6.008	1.546	#
*712131	S	3.250	3.781	3.785	.593	#
*712132	N	.625	1.687	1.691	.750	#
*712133	S	1.187	1.718	1.722	.550	#
*712134	N	1.440	2.756	2.764	.551	35
*712135	F	1.312	2.097	2.105	.375	#

Part No.	Lip Mat'l	Shaft Size	Hsg. Bore	Seal O.D.	Seal Width	Type/ Illus.
712100 SERIES (cont.)						
*712136	S	2.187	2.875	2.883	.500	32
*712137	N	5.000	5.750	5.758	.437	33
*712138★	N	*77,00*	*100,10*	*100,30*	*11,00*	35
		3.031	3.941	3.949	.433	
*712139	S	1.500	2.000	2.010	.219	35
*712140	S	1.125	1.563	1.583	.375	35
*712141➡	T	1.437	2.059	2.065	.315	32
*712142⬅	T	3.110	3.750	3.760	.437	32
*712143	S	1.687	2.875	2.885	.625	32
*712144	S	1.546	2.375	2.385	.500	32
*712145	S	2.312	3.125	3.135	.375	35
712146⬅➡	S	1.687	2.560	2.579	.470	25
*712147	V	.875	1.375	1.379	.375	43
712200 SERIES						
712250	V	2.250	3.000	3.005	.375	47
712260	S	1.750	2.810	2.814	.315	47
712270	S	.875	1.436	1.441	.256	48
712375	N	2.375	4.064	4.069	1.092	90
712449⬅	V	4.812	5.543	5.551	.472	32
712511★➡	V	*68,00*	*89,00*	*89,20*	*11,00*	32
		2.677	3.504	3.512	.433	
712512⬅	N	2.250	3.252	3.260	.551	#
712516★➡	N	*47,60*	*68,00*	*68,30*	*14,00*	#
		1.875	2.677	2.689	.551	
712551★	S	*40,00*	*56,00*	*56,26*	*8,00*	32
		1.575	2.205	2.215	.315	
712598	S	2.598	3.999	4.004	.780	47
712625	N	2.625	4.064	4.069	.960	90
712692	V	1.874	2.559	2.569	.335	#
712750	V	3.500	4.501	4.506	.468	41
712937	N	2.937	4.939	4.944	1.250	90
712938	S	2.205	2.874	2.883	.866	#
713000 SERIES						
713103➡	V	2.180	3.190	3.194	.620	69
713163★⬅	S	*114,00*	*135,00*	*135,25*	*13,00*	47
		4.488	5.315	5.325	.512	
713655★⬅	N	*35,00*	*52,00*	*52,35*	*7,75*	32
		1.378	2.047	2.061	.305	
713750	V	3.750	4.500	4.506	.468	69
713771★➡	V	*35,00*	*50,00*	*50,34*	*7,00*	35
		1.378	1.969	1.982	.276	
714000 SERIES						
714075	H	1.771	2.500	2.504	.359	#
714436★	S	*35,00*	*48,00*	*48,20*	*8,00*	32
		1.378	1.890	1.898	.315	
714470	V	3.125	4.003	4.008	.500	48
714489	V	3.750	4.499	4.506	.468	96
714503	N	1.886	2.756	2.756	.823	#
714512⬅➡	N	2.375	4.498	4.504	.391	87
714558⬅➡	V	1.399	2.484	2.489	.280	#
714559⬅➡	V	1.399	2.484	2.489	.500	74
*714561⬅	V	2.503	3.428	3.439	.800	#
714569⬅➡	V	1.574	2.410	2.415	.540	#
714616★	V	*16,00*	*44,75*	*44,96*	*9,00*	#
		.630	1.762	1.770	.354	
714619★	S	*30,00*	*48,00*	*48,30*	*8,00*	35
		1.181	1.890	1.902	.315	
714654⬅	N	2.000	2.996	3.003	.438	47
714655➡	N	1.375	1.981	1.989	.252	48
714662★	V	*16,00*	*27,23*	*27,33*	*9,00*	47
		.630	1.072	1.076	.354	
714670⬅	N	2.500	3.500	3.504	.450	47
714675⬅➡	V	1.843	2.748	2.751	.425	#
714679⬅➡	N	1.605	2.560	2.565	.693	#
714713⬅➡	V	4.000	4.999	5.004	.469	96
714750	V	4.750	5.751	5.756	.500	48

For Illustration and Material Data See Technical Section

Designed For A Specific Application - Not Recommended For General Use ➡ Hydrodynamic Lip Design-CW ⬅ Hydrodynamic Lip Design-CCW

⬅➡ Hydrodynamic Lip Design-Bidirectional

* The U.S. customer service number is 877-4-TIMKEN. The Canadian customer service numbers are 800-565-4927 (English) and 800-565-0438 (French-Canadian). ★ Metric Seal

Part No.	Lip Mat'l	Shaft Size	Hsg. Bore	Seal O.D.	Seal Width	Type/ Illus.
714000 SERIES (cont.)						
714810⬅	V	3.003	3.751	3.761	.570	#
715000 SERIES						
*715000	H	5.000	6.001	6.006	.500	#
715100	S	1.875	3.150	3.155	.250	#
*715101%	S	1.370	1.375	2.438	.250	#
715319	N	3.500	5.126	5.131	.625	47
716000 SERIES						
716102★⬅	H	*85,00*	*105,00*	*105,28*	*10,00*	32
		3.346	4.134	4.145	.394	
716445★	V	*75,00*	*95,00*	*95,27*	*10,00*	35
		2.953	3.740	3.751	.394	
716484★	V	*48,00*	*65,00*	*65,30*	*10,00*	32
		1.890	2.559	2.571	.394	
717000 SERIES						
*717003★	S	*100,00*	*123,85*	*123,98*	*12,70*	41
		3.937	4.876	4.881	.500	
717004★	S	*120,00*	*140,00*	*140,25*	*12,00*	48
		4.724	5.512	5.522	.472	
717005★⬅	S	*95,00*	*110,00*	*110,26*	*11,00*	32
		3.740	4.331	4.341	.433	
717006★	S	*95,00*	*115,00*	*115,25*	*10,00*	45
		3.740	4.528	4.537	.394	
718610	N	.562	1.004	1.008	.254	47
719316	V	1.875	3.160	3.165	.720	72
720000 SERIES						
722108	N	1.312	1.625	1.662	.156	VRS1
722109	S	2.250	2.675	2.733	.539	VRS1
722250	N	2.250	4.064	4.069	1.092	90
727410	S	.750	1.000	1.004	.125	44
900000 SERIES						
*907091⬅	T	5.125	5.999	6.006	.413	90
910000 SERIES						
*914411⬅	T	6.625	8.000	8.007	.750	91
*914412⬅	T	6.625	8.000	8.007	.750	91
*914413➡	T	6.625	8.000	8.007	1.000	91
940000 SERIES						
*947090⬅	T	5.125	5.999	6.006	.413	94
METRIC SERIES						
*4.5X16X5	S	*4,50*	*15,80*	*16,00*	*5,00*	32
		.177	.622	.630	.197	
*4.5X16X7	S	*4,50*	*15,80*	*16,00*	*7,00*	32
		.177	.622	.630	.276	
*4.5X17X7	S	*4,50*	*16,80*	*17,00*	*7,00*	32
		.177	.661	.669	.276	
*4.8X15X5	S	*4,80*	*14,80*	*15,00*	*5,00*	32
		.189	.583	.591	.197	
*5X15X6	S	*5,00*	*14,80*	*15,00*	*6,00*	32
		.197	.583	.591	.236	
*5X16X6	S	*5,00*	*15,80*	*16,00*	*6,00*	32
		.197	.622	.630	.236	
*5X16X5	S	*5,00*	*16,00*	*16,20*	*5,00*	32
		.197	.630	.638	.197	
*5X17X7	S	*5,00*	*16,80*	*17,00*	*7,00*	32
		.197	.661	.669	.276	
*5X18X6	S	*5,00*	*17,80*	*18,00*	*6,00*	32
		.197	.701	.709	.236	
*5X18X7	S	*5,00*	*17,80*	*18,00*	*7,00*	32
		.197	.701	.709	.276	
*5X18X10	S	*5,00*	*17,80*	*18,00*	*10,00*	32
		.197	.701	.709	.394	
*5X19X7	S	*5,00*	*18,80*	*19,00*	*7,00*	32
		.197	.740	.748	.276	
METRIC SERIES (cont.)						
*5X22X7	S	*5,00*	*21,80*	*22,00*	*7,00*	32
		.197	.858	.866	.276	
*5.5X18X8	S	*5,50*	*17,80*	*18,00*	*8,00*	32
		.217	.701	.709	.315	
*5.5X22X8	S	*5,50*	*21,80*	*22,00*	*8,00*	32
		.217	.858	.866	.315	
6X16X5	S	*6,00*	*16,00*	*16,20*	*5,00*	35
		.236	.630	.638	.197	
6X16X7	S	*6,00*	*16,00*	*16,28*	*7,00*	35
		.236	.630	.641	.276	
*6X16X7V	V	*6,00*	*16,00*	*16,20*	*7,00*	35
		.236	.630	.638	.276	
*6X17X7	S	*6,00*	*16,80*	*17,00*	*7,00*	32
		.236	.661	.669	.276	
*6X18X6	S	*6,00*	*17,80*	*18,00*	*6,00*	32
		.236	.701	.709	.236	
*6X18X7	S	*6,00*	*17,80*	*18,00*	*7,00*	32
		.236	.701	.709	.276	
*6X19X7	S	*6,00*	*18,80*	*19,00*	*7,00*	32
		.236	.740	.748	.276	
*6X20X5.5	S	*6,00*	*19,80*	*20,00*	*5,50*	32
		.236	.779	.787	.217	
*6X21X7	S	*6,00*	*20,80*	*21,00*	*7,00*	32
		.236	.819	.827	.276	
6X22X7	S	*6,00*	*22,00*	*22,28*	*7,00*	35
		.236	.866	.877	.276	
*6X26X7	S	*6,00*	*25,80*	*26,00*	*7,00*	32
		.236	1.016	1.024	.276	
*6X35X7	S	*6,00*	*34,80*	*35,00*	*7,00*	32
		.236	1.370	1.378	.276	
*6.5X14.5X7	S	*6,50*	*14,30*	*14,50*	*7,00*	32
		.256	.563	.571	.276	
*6.8X22X7	S	*6,80*	*21,80*	*22,00*	*7,00*	32
		.268	.858	.866	.276	
7X16X7	S	*7,00*	*16,00*	*16,28*	*7,00*	32
		.276	.630	.641	.276	
*7X16X7V	V	*7,00*	*16,00*	*16,20*	*7,00*	35
		.276	.630	.638	.276	
*7X17X7	S	*7,00*	*16,80*	*17,00*	*7,00*	32
		.276	.661	.669	.276	
*7X18X7	S	*7,00*	*17,80*	*18,00*	*7,00*	32
		.276	.701	.709	.276	
*7X19X7	S	*7,00*	*18,80*	*19,00*	*7,00*	32
		.276	.740	.748	.276	
*7X22X6	S	*7,00*	*21,80*	*22,00*	*6,00*	32
		.276	.858	.866	.236	
*7X22X8	S	*7,00*	*21,80*	*22,00*	*8,00*	32
		.276	.858	.866	.315	
7X22X7	S	*7,00*	*22,00*	*22,28*	*7,00*	35
		.276	.866	.877	.276	
*7X31X7	S	*7,00*	*30,80*	*31,00*	*7,00*	32
		.276	1.212	1.220	.276	
*8X14X7	S	*8,00*	*13,80*	*14,00*	*7,00*	32
		.315	.543	.551	.276	
8X14X4	S	*8,00*	*14,00*	*14,20*	*4,00*	35
		.315	.551	.559	.157	
*8X14X5	S	*8,00*	*14,00*	*14,20*	*5,00*	32
		.315	.551	.559	.197	
*8X15X5	S	*8,00*	*14,80*	*15,00*	*5,00*	32
		.315	.583	.591	.197	
*8X16X5	S	*8,00*	*15,80*	*16,00*	*5,00*	32
		.315	.622	.630	.197	
*8X16X6	S	*8,00*	*15,80*	*16,00*	*6,00*	32
		.315	.622	.630	.236	
8X16X7	S	*8,00*	*16,00*	*16,23*	*7,00*	35
		.315	.630	.639	.276	
*8X17X7	S	*8,00*	*16,80*	*17,00*	*7,00*	32
		.315	.661	.669	.276	
*8X18X6	S	*8,00*	*17,80*	*18,00*	*6,00*	32
		.315	.701	.709	.236	

For Illustration and Material Data See Technical Section
Designed For A Specific Application - Not Recommended For General Use ➡ Hydrodynamic Lip Design-CW ⬅ Hydrodynamic Lip Design-CCW % External Bore
* The U.S. customer service number is 877-4-TIMKEN. The Canadian customer service numbers are 800-565-4927 (English) and 800-565-0438 (French-Canadian). ★ Metric Seal

METRIC SERIES (cont.)

Part No.	Lip Mat'l	Shaft Size	Hsg. Bore	Seal O.D.	Seal Width	Type/ Illus.
*8X18X8	S	8,00	17,80	18,00	8,00	32
		.315	.701	.709	.315	
8X18X5	S	8,00	18,00	18,20	5,00	35
		.315	.709	.717	.197	
8X18X7	S	8,00	18,00	18,20	7,00	32
		.315	.709	.717	.276	
*8X19X7	S	8,00	18,80	19,00	7,00	32
		.315	.740	.748	.276	
*8X20X7	S	8,00	19,80	20,00	7,00	32
		.315	.779	.787	.276	
*8X22X6	S	8,00	21,80	22,00	6,00	32
		.315	.858	.866	.236	
8X22X7	S	8,00	22,00	22,28	7,00	32
		.315	.866	.877	.276	
*8X22X7V	V	8,00	22,00	22,20	7,00	32
		.315	.866	.874	.276	
*8X23X5	S	8,00	22,80	23,00	5,00	32
		.315	.898	.906	.197	
8X24X7	S	8,00	24,00	24,28	7,00	35
		.315	.945	.956	.276	
*8X25X7	S	8,00	24,80	25,00	7,00	32
		.315	.976	.984	.276	
*8X25X8	S	8,00	24,80	25,00	8,00	32
		.315	.976	.984	.315	
*8X25X9	S	8,00	24,80	25,00	9,00	32
		.315	.976	.984	.354	
*8X26X7	S	8,00	25,80	26,00	7,00	32
		.315	1.016	1.024	.276	
*8X30X6	S	8,00	29,80	30,00	6,00	32
		.315	1.173	1.181	.236	
*8X30X7	S	8,00	29,80	30,00	7,00	32
		.315	1.173	1.181	.276	
*8X34X8	S	8,00	33,80	34,00	8,00	32
		.315	1.331	1.339	.315	
*8.85X17X5	S	8,85	16,80	17,00	5,00	32
		.348	.661	.669	.197	
*8.85X20X5	S	8,85	19,80	20,00	5,00	32
		.348	.779	.787	.197	
*9X16X5.5	S	9,00	15,80	16,00	5,50	32
		.354	.622	.630	.217	
9X18X7	S	9,00	18,00	18,20	7,00	35
		.354	.709	.717	.276	
*9X19X5	S	9,00	18,80	19,00	5,00	32
		.354	.740	.748	.197	
*9X19X7	S	9,00	18,80	19,00	7,00	32
		.354	.740	.748	.276	
*9X20X7	S	9,00	19,80	20,00	7,00	32
		.354	.779	.787	.276	
9X22X7	S	9,00	22,00	22,20	7,00	35
		.354	.866	.874	.276	
*9X22X7V	V	9,00	22,00	22,20	7,00	35
		.354	.866	.874	.276	
9X24X7	S	9,00	24,00	24,28	7,00	35
		.354	.945	.956	.276	
*9X25X7	S	9,00	24,80	25,00	7,00	32
		.354	.976	.984	.276	
9X26X7	S	9,00	26,00	26,28	7,00	35
		.354	1.024	1.035	.276	
*9X29X7	S	9,00	28,80	29,00	7,00	32
		.354	1.134	1.142	.276	
*9X30X7	S	9,00	29,80	30,00	7,00	32
		.354	1.173	1.181	.276	
*10X16X4	S	10,00	15,80	16,00	4,00	32
		.394	.622	.630	.157	
*10X16X4.5	S	10,00	15,80	16,00	4,50	32
		.394	.622	.630	.177	
*10X17X5	S	10,00	16,80	17,00	5,00	32
		.394	.661	.669	.197	
*10X17X7	S	10,00	16,80	17,00	7,00	32
		.394	.661	.669	.276	

METRIC SERIES (cont.)

Part No.	Lip Mat'l	Shaft Size	Hsg. Bore	Seal O.D.	Seal Width	Type/ Illus.
*10X18X4	S	10,00	17,80	18,00	4,00	32
		.394	.701	.709	.157	
*10X18X5	S	10,00	17,80	18,00	5,00	32
		.394	.701	.709	.197	
*10X18X6	S	10,00	17,80	18,00	6,00	32
		.394	.701	.709	.236	
*10X18X7	S	10,00	17,80	18,00	7,00	32
		.394	.701	.709	.276	
10X19X7	S	10,00	19,00	19,20	7,00	32
		.394	.748	.756	.276	
*10X20X5	S	10,00	19,80	20,00	5,00	32
		.394	.779	.787	.197	
*10X20X6	S	10,00	19,80	20,00	6,00	32
		.394	.779	.787	.236	
*10X20X7	S	10,00	19,80	20,00	7,00	32
		.394	.779	.787	.276	
*10X21X4	S	10,00	20,80	21,00	4,00	32
		.394	.819	.827	.157	
*10X21X6	S	10,00	20,80	21,00	6,00	32
		.394	.819	.827	.236	
*10X21X7	S	10,00	20,80	21,00	7,00	32
		.394	.819	.827	.276	
*10X22X5	S	10,00	21,80	22,00	5,00	32
		.394	.858	.866	.197	
*10X22X6	S	10,00	21,80	22,00	6,00	32
		.394	.858	.866	.236	
10X22X7	S	10,00	22,00	22,28	7,00	32
		.394	.866	.877	.276	
*10X22X7V	V	10,00	22,00	22,20	7,00	35
		.394	.866	.874	.276	
*10X23X7	S	10,00	22,80	23,00	7,00	32
		.394	.898	.906	.276	
*10X23X8	S	10,00	22,80	23,00	8,00	32
		.394	.898	.906	.315	
*10X24X6	S	10,00	23,80	24,00	6,00	32
		.394	.937	.945	.236	
10X24X7	S	10,00	24,00	24,23	7,00	35
		.394	.945	.954	.276	
*10X25X5	S	10,00	24,80	25,00	5,00	32
		.394	.976	.984	.197	
*10X25X10	S	10,00	24,80	25,00	10,00	32
		.394	.976	.984	.394	
10X25X7	S	10,00	25,00	25,28	7,00	32
		.394	.984	.995	.276	
*10X26X8	S	10,00	25,80	26,00	8,00	32
		.394	1.016	1.024	.315	
10X26X7	S	10,00	26,00	26,23	7,00	32
		.394	1.024	1.033	.276	
*10X28X7	S	10,00	27,80	28,00	7,00	32
		.394	1.094	1.102	.276	
*10X28X8	S	10,00	27,80	28,00	8,00	32
		.394	1.094	1.102	.315	
*10X30X7	S	10,00	29,80	30,00	7,00	32
		.394	1.173	1.181	.276	
*10X30X10	S	10,00	29,80	30,00	10,00	32
		.394	1.173	1.181	.394	
*10X23.5X10	S	10,00	23,30	23,50	10,00	32
		.394	.917	.925	.394	
11X17X4	S	11,00	17,00	17,25	4,00	32
		.433	.669	.679	.157	
*11X21X7	S	11,00	20,80	21,00	7,00	32
		.433	.819	.827	.276	
*11X21X8	S	11,00	20,80	21,00	8,00	32
		.433	.819	.827	.315	
11X22X7	S	11,00	22,00	22,28	7,00	32
		.433	.866	.877	.276	
*11X23X7	S	11,00	22,80	23,00	7,00	32
		.433	.898	.906	.276	
*11X25X7	S	11,00	24,80	25,00	7,00	32
		.433	.976	.984	.276	

For Illustration and Material Data See Technical Section

* The U.S. customer service number is 877-4-TIMKEN. The Canadian customer service numbers are 800-565-4927 (English) and 800-565-0438 (French-Canadian).

METRIC SERIES (cont.)

Part No.	Lip Mat'l	Shaft Size	Hsg. Bore	Seal O.D.	Seal Width	Type/ Illus.
11X26X7	S	11,00	26,00	26,28	7,00	35
		.433	1.024	1.035	.276	
* 11X28X7	S	11,00	27,80	28,00	7,00	32
		.433	1.094	1.102	.276	
* 11X29X7	S	11,00	28,80	29,00	7,00	32
		.433	1.134	1.142	.276	
* 11X30X10	S	11,00	29,80	30,00	10,00	32
		.433	1.173	1.181	.394	
11X30X7	S	11,00	30,00	30,20	7,00	32
		.433	1.181	1.189	.276	
* 11X23.5X7	S	11,00	23,30	23,50	7,00	32
		.433	.917	.925	.276	
* 11.6X19X6	S	11,60	18,80	19,00	6,00	32
		.457	.740	.748	.236	
* 11.6X24X10	S	11,60	23,80	24,00	10,00	32
		.457	.937	.945	.394	
* 12X18X5	S	12,00	17,80	18,00	5,00	32
		.472	.701	.709	.197	
* 12X19X7	S	12,00	18,80	19,00	7,00	32
		.472	.740	.748	.276	
12X19X5	S	12,00	19,00	19,20	5,00	32
		.472	.748	.756	.197	
* 12X20X4	S	12,00	19,80	20,00	4,00	32
		.472	.779	.787	.157	
* 12X20X6	S	12,00	19,80	20,00	6,00	32
		.472	.779	.787	.236	
* 12X20X7	S	12,00	19,80	20,00	7,00	32
		.472	.779	.787	.276	
12X20X5	S	12,00	20,00	20,28	5,00	32
		.472	.787	.798	.197	
* 12X21X4	S	12,00	20,80	21,00	4,00	32
		.472	.819	.827	.157	
* 12X21X7	S	12,00	20,80	21,00	7,00	32
		.472	.819	.827	.276	
* 12X22X5	S	12,00	21,80	22,00	5,00	32
		.472	.858	.866	.197	
* 12X22X8	S	12,00	21,80	22,00	8,00	32
		.472	.858	.866	.315	
* 12X22X9	S	12,00	21,80	22,00	9,00	32
		.472	.858	.866	.354	
* 12X22X6.5	S	12,00	21,80	22,00	6,50	32
		.472	.858	.866	.256	
12X22X7	S	12,00	22,00	22,25	7,00	35
		.472	.866	.876	.276	
* 12X22X7V	V	12,00	22,00	22,20	7,00	35
		.472	.866	.874	.276	
* 12X23X7	S	12,00	22,80	23,00	7,00	32
		.472	.898	.906	.276	
* 12X24X8	S	12,00	23,80	24,00	8,00	32
		.472	.937	.945	.315	
12X24X7	S	12,00	24,00	24,23	7,00	32
		.472	.945	.954	.276	
* 12X25X8	S	12,00	24,80	25,00	8,00	32
		.472	.976	.984	.315	
* 12X25X10	S	12,00	24,80	25,00	10,00	32
		.472	.976	.984	.394	
12X25X4.5	S	12,00	25,00	25,20	4,50	32
		.472	.984	.992	.177	
12X25X4.5	S	12,00	25,00	25,20	4,50	32
		.472	.984	.992	.177	
12X25X7	S	12,00	25,00	25,25	7,00	32
		.472	.984	.994	.276	
* 12X26X8	S	12,00	25,80	26,00	8,00	32
		.472	1.016	1.024	.315	
12X26X7	S	12,00	26,00	26,20	7,00	32
		.472	1.024	1.031	.276	
* 12X27X9	S	12,00	26,80	27,00	9,00	32
		.472	1.055	1.063	.354	
* 12X27X7	S	12,00	27,00	27,20	7,00	32
		.472	1.063	1.071	.276	

METRIC SERIES (cont.)

Part No.	Lip Mat'l	Shaft Size	Hsg. Bore	Seal O.D.	Seal Width	Type/ Illus.
* 12X28X8	S	12,00	27,80	28,00	8,00	32
		.472	1.094	1.102	.315	
12X28X7	S	12,00	28,00	28,20	7,00	35
		.472	1.102	1.110	.276	
* 12X28X7V	V	12,00	28,00	28,20	7,00	35
		.472	1.102	1.110	.276	
* 12X30X5	S	12,00	29,80	30,00	5,00	32
		.472	1.173	1.181	.197	
* 12X30X9	S	12,00	29,80	30,00	9,00	32
		.472	1.173	1.181	.354	
* 12X30X10	S	12,00	29,80	30,00	10,00	32
		.472	1.173	1.181	.394	
12X30X7	S	12,00	30,00	30,20	7,00	32
		.472	1.181	1.189	.276	
* 12X30X7V	V	12,00	30,00	30,20	7,00	35
		.472	1.181	1.189	.276	
* 12X32X5	S	12,00	31,80	32,00	5,00	32
		.472	1.252	1.260	.197	
* 12X32X10	S	12,00	31,80	32,00	10,00	32
		.472	1.252	1.260	.394	
12X32X7	S	12,00	32,00	32,20	7,00	35
		.472	1.260	1.268	.276	
* 12X35X10	S	12,00	34,80	35,00	10,00	32
		.472	1.370	1.378	.394	
12X35X7	S	12,00	35,00	35,20	7,00	32
		.472	1.378	1.386	.276	
* 12X37X7	S	12,00	36,80	37,00	7,00	32
		.472	1.449	1.457	.276	
* 12X23.5X7	S	12,00	23,30	23,50	7,00	32
		.472	.917	.925	.276	
* 12X25.5X7	S	12,00	25,30	25,50	7,00	32
		.472	.996	1.004	.276	
* 12X28.5X7	S	12,00	28,30	28,50	7,00	32
		.472	1.114	1.122	.276	
* 12.45X22X7	S	12,45	21,80	22,00	7,00	32
		.490	.858	.866	.276	
* 12.5X22X6	S	12,50	21,80	22,00	6,00	32
		.492	.858	.866	.236	
* 12.5X25X8	S	12,50	24,80	25,00	8,00	32
		.492	.976	.984	.315	
* 12.5X23.5X8	S	12,50	23,30	23,50	8,00	32
		.492	.917	.925	.315	
* 12.5X23.5X10	S	12,50	23,30	23,50	10,00	32
		.492	.917	.925	.394	
* 12.5X28.5X7	S	12,50	28,30	28,50	7,00	32
		.492	1.114	1.122	.276	
* 13X20X5	S	13,00	19,80	20,00	5,00	32
		.512	.779	.787	.197	
* 13X22X5	S	13,00	21,80	22,00	5,00	32
		.512	.858	.866	.197	
* 13X22X7	S	13,00	21,80	22,00	7,00	32
		.512	.858	.866	.276	
13X22X6	S	13,00	22,00	22,20	6,00	32
		.512	.866	.874	.236	
* 13X23X7	S	13,00	22,80	23,00	7,00	32
		.512	.898	.906	.276	
* 13X24X7	S	13,00	23,80	24,00	7,00	32
		.512	.937	.945	.276	
* 13X25X5	S	13,00	24,80	25,00	5,00	32
		.512	.976	.984	.197	
* 13X25X7	S	13,00	24,80	25,00	7,00	32
		.512	.976	.984	.276	
* 13X26X9	S	13,00	25,80	26,00	9,00	32
		.512	1.016	1.024	.354	
13X26X7	S	13,00	26,00	26,20	7,00	32
		.512	1.024	1.031	.276	
* 13X27X7	S	13,00	27,00	27,20	7,00	32
		.512	1.063	1.071	.276	
13X28X7	S	13,00	28,00	28,20	7,00	32
		.512	1.102	1.110	.276	

For Illustration and Material Data See Technical Section

* The U.S. customer service number is 877-4-TIMKEN. The Canadian customer service numbers are 800-565-4927 (English) and 800-565-0438 (French-Canadian).

METRIC SERIES (cont.)

Part No.	Lip Mat'l	Shaft Size	Hsg. Bore	Seal O.D.	Seal Width	Type/ Illus.
* 13X30X8	S	13,00	29,80	30,00	8,00	32
		.512	1.173	1.181	.315	
13X30X7	S	13,00	30,00	30,20	7,00	32
		.512	1.181	1.189	.276	
* 13X32X7	S	13,00	31,80	32,00	7,00	32
		.512	1.252	1.260	.276	
* 13X35X7	S	13,00	34,80	35,00	7,00	32
		.512	1.370	1.378	.276	
* 13.8X24X5	S	13,80	23,80	24,00	5,00	32
		.543	.937	.945	.197	
* 14X21X4	S	14,00	20,80	21,00	4,00	32
		.551	.819	.827	.157	
* 14X22X4	S	14,00	21,80	22,00	4,00	32
		.551	.858	.866	.157	
* 14X22X6	S	14,00	21,80	22,00	6,00	32
		.551	.858	.866	.236	
* 14X22X7	S	14,00	21,80	22,00	7,00	32
		.551	.858	.866	.276	
* 14X23X6	S	14,00	22,80	23,00	6,00	32
		.551	.898	.906	.236	
* 14X24X4	S	14,00	23,80	24,00	4,00	32
		.551	.937	.945	.157	
* 14X24X5	S	14,00	23,80	24,00	5,00	32
		.551	.937	.945	.197	
* 14X24X6	S	14,00	23,80	24,00	6,00	32
		.551	.937	.945	.236	
* 14X24X8	S	14,00	23,80	24,00	8,00	32
		.551	.937	.945	.315	
14X24X7	S	14,00	24,00	24,23	7,00	32
		.551	.945	.954	.276	
* 14X25X4	S	14,00	24,80	25,00	4,00	32
		.551	.976	.984	.157	
* 14X25X7	S	14,00	24,80	25,00	7,00	32
		.551	.976	.984	.276	
* 14X25X9	S	14,00	24,80	25,00	9,00	32
		.551	.976	.984	.354	
14X25X5	S	14,00	25,00	25,23	5,00	32
		.551	.984	.993	.197	
* 14X26X8	S	14,00	25,80	26,00	8,00	32
		.551	1.016	1.024	.315	
14X26X7	S	14,00	26,00	26,23	7,00	32
		.551	1.024	1.033	.276	
* 14X27X10	S	14,00	26,80	27,00	10,00	32
		.551	1.055	1.063	.394	
14X27X7	S	14,00	27,00	27,20	7,00	32
		.551	1.063	1.071	.276	
* 14X28X7	S	14,00	27,80	28,00	7,00	32
		.551	1.094	1.102	.276	
* 14X28X7	S	14,00	27,80	28,00	7,00	32
		.551	1.094	1.102	.276	
14X28X6	S	14,00	28,00	28,23	6,00	32
		.551	1.102	1.111	.236	
* 14X29X7	S	14,00	28,80	29,00	7,00	32
		.551	1.134	1.142	.276	
* 14X30X8	S	14,00	29,80	30,00	8,00	32
		.551	1.173	1.181	.315	
* 14X30X9	S	14,00	29,80	30,00	9,00	32
		.551	1.173	1.181	.354	
* 14X30X10	S	14,00	29,80	30,00	10,00	32
		.551	1.173	1.181	.394	
14X30X7	S	14,00	30,00	30,20	7,00	32
		.551	1.181	1.189	.276	
* 14X30X7V	V	14,00	30,00	30,20	7,00	35
		.551	1.181	1.189	.276	
* 14X30X7.5	S	14,00	29,80	30,00	7,50	32
		.551	1.173	1.181	.295	
* 14X32X10	S	14,00	31,80	32,00	10,00	32
		.551	1.252	1.260	.394	
14X32X7	S	14,00	32,00	32,20	7,00	32
		.551	1.260	1.268	.276	

METRIC SERIES (cont.)

Part No.	Lip Mat'l	Shaft Size	Hsg. Bore	Seal O.D.	Seal Width	Type/ Illus.
* 14X32X7.5	S	14,00	31,80	32,00	7,50	32
		.551	1.252	1.260	.295	
* 14X35X8	S	14,00	34,80	35,00	8,00	32
		.551	1.370	1.378	.315	
* 14X35X10	S	14,00	34,80	35,00	10,00	32
		.551	1.370	1.378	.394	
14X35X7	S	14,00	35,00	35,22	7,00	32
		.551	1.378	1.387	.276	
* 14X36X7	S	14,00	35,80	36,00	7,00	32
		.551	1.409	1.417	.276	
* 14X40X7	S	14,00	39,80	40,00	7,00	32
		.551	1.567	1.575	.276	
* 14X40X10	S	14,00	39,80	40,00	10,00	32
		.551	1.567	1.575	.394	
* 14X28.5X7	S	14,00	28,30	28,50	7,00	32
		.551	1.114	1.122	.276	
* 14.5X32X7	S	14,50	31,80	32,00	7,00	32
		.571	1.252	1.260	.276	
* 14.8X30X7.5	S	14,80	29,80	30,00	7,50	32
		.583	1.173	1.181	.295	
* 15X21X5	S	15,00	20,80	21,00	5,00	32
		.591	.819	.827	.197	
* 15X22X4	S	15,00	21,80	22,00	4,00	32
		.591	.858	.866	.157	
* 15X22X5	S	15,00	21,80	22,00	5,00	32
		.591	.858	.866	.197	
* 15X22X7	S	15,00	21,80	22,00	7,00	32
		.591	.858	.866	.276	
* 15X23X7	S	15,00	22,80	23,00	7,00	32
		.591	.898	.906	.276	
* 15X24X5	S	15,00	23,80	24,00	5,00	32
		.591	.937	.945	.197	
* 15X24X6	S	15,00	23,80	24,00	6,00	32
		.591	.937	.945	.236	
15X24X7	S	15,00	24,00	24,23	7,00	32
		.591	.945	.954	.276	
15X25X5	**S**	***15,00***	***25,00***	***25,20***	***5,00***	**32**
		.591	**.984**	**.992**	**.197**	
15X25X6	N	15,00	25,00	25,25	6,00	32
		.591	.984	.994	.236	
15X25X7	S	15,00	25,00	25,20	7,00	35
		.591	.984	.992	.276	
* 15X26X6	S	15,00	25,80	26,00	6,00	32
		.591	1.016	1.024	.236	
* 15X26X8	S	15,00	25,80	26,00	8,00	32
		.591	1.016	1.024	.315	
* 15X26X9	S	15,00	25,80	26,00	9,00	32
		.591	1.016	1.024	.354	
15X26X7	S	15,00	26,00	26,23	7,00	32
		.591	1.024	1.033	.276	
* 15X27X7	S	15,00	26,80	27,00	7,00	32
		.591	1.055	1.063	.276	
* 15X27X8	S	15,00	26,80	27,00	8,00	32
		.591	1.055	1.063	.315	
* 15X28X6	S	15,00	27,80	28,00	6,00	32
		.591	1.094	1.102	.236	
* 15X28X8	S	15,00	27,80	28,00	8,00	32
		.591	1.094	1.102	.315	
* 15X28X10	S	15,00	27,80	28,00	10,00	32
		.591	1.094	1.102	.394	
15X28X7	S	15,00	28,00	28,20	7,00	32
		.591	1.102	1.110	.276	
* 15X29X7	S	15,00	28,80	29,00	7,00	32
		.591	1.134	1.142	.276	
* 15X30X5	S	15,00	29,80	30,00	5,00	32
		.591	1.173	1.181	.197	
* 15X30X8	S	15,00	29,80	30,00	8,00	32
		.591	1.173	1.181	.315	
* 15X30X10	S	15,00	29,80	30,00	10,00	32
		.591	1.173	1.181	.394	

For Illustration and Material Data See Technical Section

* The U.S. customer service number is 877-4-TIMKEN. The Canadian customer service numbers are 800-565-4927 (English) and 800-565-0438 (French-Canadian).

METRIC SERIES (cont.)

Part No.	Lip Mat'l	Shaft Size	Hsg. Bore	Seal O.D.	Seal Width	Type/ Illus.
15X30X7	S	15,00	30,00	30,23	7,00	32
		.591	1.181	1.190	.276	
* 15X30X7.5	S	15,00	29,80	30,00	7,50	32
		.591	1.173	1.181	.295	
* 15X31X7	S	15,00	30,80	31,00	7,00	32
		.591	1.212	1.220	.276	
* 15X32X5	S	15,00	31,80	32,00	5,00	32
		.591	1.252	1.260	.197	
* 15X32X9	S	15,00	31,80	32,00	9,00	32
		.591	1.252	1.260	.354	
15X32X7	S	15,00	32,00	32,20	7,00	35
		.591	1.260	1.268	.276	
* 15X32X7V	V	15,00	32,00	32,20	7,00	35
		.591	1.260	1.268	.276	
* 15X32X7.5	S	15,00	31,80	32,00	7,50	32
		.591	1.252	1.260	.295	
15X32X8	S	15,00	32,00	32,22	8,00	32
		.591	1.260	1.269	.315	
* 15X35X5	S	15,00	34,80	35,00	5,00	32
		.591	1.370	1.378	.197	
* 15X35X6	S	15,00	34,80	35,00	6,00	32
		.591	1.370	1.378	.236	
* 15X35X8	S	15,00	34,80	35,00	8,00	32
		.591	1.370	1.378	.315	
* 15X35X10	S	15,00	34,80	35,00	10,00	32
		.591	1.370	1.378	.394	
15X35X7	S	15,00	35,00	35,23	7,00	32
		.591	1.378	1.387	.276	
* 15X35X7V	V	15,00	35,00	35,20	7,00	35
		.591	1.378	1.386	.276	
* 15X36X7	S	15,00	35,80	36,00	7,00	32
		.591	1.409	1.417	.276	
* 15X37X7	S	15,00	36,80	37,00	7,00	32
		.591	1.449	1.457	.276	
15X37X6	S	15,00	37,00	37,20	6,00	32
		.591	1.457	1.465	.236	
* 15X38X10	S	15,00	37,80	38,00	10,00	32
		.591	1.488	1.496	.394	
* 15X38X7	S	15,00	38,00	38,20	7,00	32
		.591	1.496	1.504	.276	
* 15X40X8	S	15,00	39,80	40,00	8,00	32
		.591	1.567	1.575	.315	
* 15X40X10	S	15,00	39,80	40,00	10,00	32
		.591	1.567	1.575	.394	
15X40X7	S	15,00	40,00	40,20	7,00	32
		.591	1.575	1.583	.276	
* 15X42X7	S	15,00	41,80	42,00	7,00	32
		.591	1.646	1.654	.276	
* 15X42X8	S	15,00	41,80	42,00	8,00	32
		.591	1.646	1.654	.315	
* 15X42X10	S	15,00	41,80	42,00	10,00	32
		.591	1.646	1.654	.394	
* 15X25.5X7	S	15,00	25,30	25,50	7,00	32
		.591	.996	1.004	.276	
* 15X25.5X4.5	S	15,00	25,30	25,50	4,50	32
		.591	.996	1.004	.177	
* 15X28.5X7	S	15,00	28,30	28,50	7,00	32
		.591	1.114	1.122	.276	
* 15X28.13X7	S	15,00	27,93	28,13	7,00	32
		.591	1.099	1.107	.276	
* 15.6X25.5X7	S	15,60	25,30	25,50	7,00	32
		.614	.996	1.004	.276	
* 16X21X6	S	16,00	20,80	21,00	6,00	32
		.630	.819	.827	.236	
* 16X22X7	S	16,00	21,80	22,00	7,00	32
		.630	.858	.866	.276	
16X22X4	S	16,00	22,00	22,20	4,00	32
		.630	.866	.874	.157	
* 16X24X4	S	16,00	23,80	24,00	4,00	32
		.630	.937	.945	.157	

METRIC SERIES (cont.)

Part No.	Lip Mat'l	Shaft Size	Hsg. Bore	Seal O.D.	Seal Width	Type/ Illus.
16X24X5	S	16,00	25,00	25,20	5,00	35
		.630	.984	.992	.197	
16X24X6	S	16,00	24,00	24,20	6,00	32
		.630	.945	.953	.236	
16X24X7	S	16,00	24,00	24,20	7,00	32
		.630	.945	.953	.276	
* 16X25X5	S	16,00	24,80	25,00	5,00	32
		.630	.976	.984	.197	
* 16X25X6	S	16,00	24,80	25,00	6,00	32
		.630	.976	.984	.236	
* 16X25X7	S	16,00	24,80	25,00	7,00	32
		.630	.976	.984	.276	
* 16X26X5	S	16,00	25,80	26,00	5,00	32
		.630	1.016	1.024	.197	
* 16X26X6	S	16,00	25,80	26,00	6,00	32
		.630	1.016	1.024	.236	
* 16X26X6	S	16,00	25,80	26,00	6,00	32
		.630	1.016	1.024	.236	
16X26X7	S	16,00	26,00	26,20	7,00	32
		.630	1.024	1.031	.276	
* 16X27X7	S	16,00	26,80	27,00	7,00	32
		.630	1.055	1.063	.276	
16X28X7	S	16,00	28,00	28,23	7,00	32
		.630	1.102	1.111	.276	
* 16X28X7V	V	16,00	28,00	28,20	7,00	32
		.630	1.102	1.110	.276	
* 16X29X7	S	16,00	28,80	29,00	7,00	32
		.630	1.134	1.142	.276	
* 16X30X5	S	16,00	29,80	30,00	5,00	32
		.630	1.173	1.181	.197	
* 16X30X6	S	16,00	29,80	30,00	6,00	32
		.630	1.173	1.181	.236	
* 16X30X8	S	16,00	29,80	30,00	8,00	32
		.630	1.173	1.181	.315	
* 16X30X10	S	16,00	29,80	30,00	10,00	32
		.630	1.173	1.181	.394	
* 16X30X4.5	S	16,00	29,80	30,00	4,50	32
		.630	1.173	1.181	.177	
16X30X7	S	16,00	30,00	30,23	7,00	32
		.630	1.181	1.190	.276	
* 16X30X7V	V	16,00	30,00	30,20	7,00	35
		.630	1.181	1.189	.276	
* 16X32X10	S	16,00	31,80	32,00	10,00	32
		.630	1.252	1.260	.394	
16X32X7	S	16,00	32,00	32,28	7,00	32
		.630	1.260	1.271	.276	
* 16X34X4	S	16,00	33,80	34,00	4,00	32
		.630	1.331	1.339	.157	
* 16X35X8	S	16,00	34,80	35,00	8,00	32
		.630	1.370	1.378	.315	
* 16X35X10	S	16,00	34,80	35,00	10,00	32
		.630	1.370	1.378	.394	
16X35X7	S	16,00	35,00	35,23	7,00	32
		.630	1.378	1.387	.276	
* 16X36X7	S	16,00	36,00	36,20	7,00	32
		.630	1.417	1.425	.276	
* 16X37X7	S	16,00	36,80	37,00	7,00	32
		.630	1.449	1.457	.276	
* 16X38X8	S	16,00	37,80	38,00	8,00	32
		.630	1.488	1.496	.315	
16X38X7	S	16,00	38,00	38,20	7,00	32
		.630	1.496	1.504	.276	
* 16X40X10	S	16,00	39,80	40,00	10,00	32
		.630	1.567	1.575	.394	
16X40X7	S	16,00	40,00	40,20	7,00	32
		.630	1.575	1.583	.276	
* 16X28.5X8	S	16,00	28,30	28,50	8,00	32
		.630	1.114	1.122	.315	
* 16.4X30X5	S	16,40	29,80	30,00	5,00	32
		.646	1.173	1.181	.197	

For Illustration and Material Data See Technical Section

* The U.S. customer service number is 877-4-TIMKEN. The Canadian customer service numbers are 800-565-4927 (English) and 800-565-0438 (French-Canadian).

METRIC SERIES (cont.)

Part No.	Lip Mat'l	Shaft Size	Hsg. Bore	Seal O.D.	Seal Width	Type/ Illus.
*17X24X7	S	17,00	23,80	24,00	7,00	32
		.669	.937	.945	.276	
*17X25X4	S	17,00	24,80	25,00	4,00	32
		.669	.976	.984	.157	
*17X25X6	S	17,00	24,80	25,00	6,00	32
		.669	.976	.984	.236	
*17X25X7	S	17,00	24,80	25,00	7,00	32
		.669	.976	.984	.276	
*17X26X6	S	17,00	25,80	26,00	6,00	32
		.669	1.016	1.024	.236	
*17X26X7	S	17,00	25,80	26,00	7,00	32
		.669	1.016	1.024	.276	
*17X27X5	S	17,00	26,80	27,00	5,00	32
		.669	1.055	1.063	.197	
*17X27X8	S	17,00	26,80	27,00	8,00	32
		.669	1.055	1.063	.315	
*17X27X10	S	17,00	26,80	27,00	10,00	32
		.669	1.055	1.063	.394	
17X27X7	S	17,00	27,00	27,20	7,00	32
		.669	1.063	1.071	.276	
*17X28X5	S	17,00	27,80	28,00	5,00	32
		.669	1.094	1.102	.197	
*17X28X6	S	17,00	27,80	28,00	6,00	32
		.669	1.094	1.102	.236	
*17X28X8	S	17,00	27,80	28,00	8,00	32
		.669	1.094	1.102	.315	
*17X28X4.5	S	17,00	27,80	28,00	4,50	32
		.669	1.094	1.102	.177	
17X28X7	S	17,00	28,00	28,23	7,00	35
		.669	1.102	1.111	.276	
*17X28X7V	V	17,00	28,00	28,20	7,00	35
		.669	1.102	1.110	.276	
*17X29X5	S	17,00	28,80	29,00	5,00	32
		.669	1.134	1.142	.197	
*17X29X7	S	17,00	29,00	29,20	7,00	32
		.669	1.142	1.150	.276	
*17X30X5	S	17,00	29,80	30,00	5,00	32
		.669	1.173	1.181	.197	
*17X30X6	S	17,00	29,80	30,00	6,00	32
		.669	1.173	1.181	.236	
*17X30X6	S	17,00	29,80	30,00	6,00	32
		.669	1.173	1.181	.236	
*17X30X8	S	17,00	29,80	30,00	8,00	32
		.669	1.173	1.181	.315	
*17X30X10	S	17,00	29,80	30,00	10,00	32
		.669	1.173	1.181	.394	
17X30X7	S	17,00	30,00	30,23	7,00	32
		.669	1.181	1.190	.276	
*17X30X7V	V	17,00	30,00	30,20	7,00	35
		.669	1.181	1.189	.276	
*17X31X7	S	17,00	30,80	31,00	7,00	32
		.669	1.212	1.220	.276	
*17X31X8	S	17,00	30,80	31,00	8,00	32
		.669	1.212	1.220	.315	
*17X32X5	S	17,00	31,80	32,00	5,00	32
		.669	1.252	1.260	.197	
*17X32X6	S	17,00	31,80	32,00	6,00	32
		.669	1.252	1.260	.236	
*17X32X8	S	17,00	31,80	32,00	8,00	32
		.669	1.252	1.260	.315	
17X32X7	S	17,00	32,00	32,22	7,00	32
		.669	1.260	1.269	.276	
*17X33X7	S	17,00	32,80	33,00	7,00	32
		.669	1.291	1.299	.276	
*17X34X4	S	17,00	33,80	34,00	4,00	32
		.669	1.331	1.339	.157	
*17X34X7	S	17,00	33,80	34,00	7,00	32
		.669	1.331	1.339	.276	
*17X35X6	S	17,00	34,80	35,00	6,00	32
		.669	1.370	1.378	.236	

METRIC SERIES (cont.)

Part No.	Lip Mat'l	Shaft Size	Hsg. Bore	Seal O.D.	Seal Width	Type/ Illus.
*17X35X10	S	17,00	34,80	35,00	10,00	32
		.669	1.370	1.378	.394	
17X35X7	S	17,00	35,00	35,18	7,00	35
		.669	1.378	1.385	.276	
*17X35X7V	V	17,00	35,00	35,20	7,00	35
		.669	1.378	1.386	.276	
17X35X8	S	17,00	35,00	35,20	8,00	35
		.669	1.378	1.386	.315	
*17X36X7	S	17,00	36,00	36,20	7,00	32
		.669	1.417	1.425	.276	
*17X37X10	S	17,00	36,80	37,00	10,00	32
		.669	1.449	1.457	.394	
17X37X7	S	17,00	37,00	37,20	7,00	32
		.669	1.457	1.465	.276	
*17X38X10	S	17,00	37,80	38,00	10,00	32
		.669	1.488	1.496	.394	
17X38X7	S	17,00	38,00	38,20	7,00	32
		.669	1.496	1.504	.276	
*17X40X5	S	17,00	39,80	40,00	5,00	32
		.669	1.567	1.575	.197	
*17X40X8	S	17,00	39,80	40,00	8,00	32
		.669	1.567	1.575	.315	
*17X40X10	S	17,00	39,80	40,00	10,00	32
		.669	1.567	1.575	.394	
17X40X7	S	17,00	40,00	40,23	7,00	32
		.669	1.575	1.584	.276	
*17X42X7	S	17,00	42,00	42,20	7,00	32
		.669	1.654	1.661	.276	
*17X45X7	S	17,00	45,00	45,20	7,00	32
		.669	1.772	1.780	.276	
*17X46X6	S	17,00	45,80	46,00	6,00	32
		.669	1.803	1.811	.236	
*17X46X7	S	17,00	46,00	46,20	7,00	32
		.669	1.811	1.819	.276	
*17X47X10	S	17,00	46,80	47,00	10,00	32
		.669	1.842	1.850	.394	
17X47X7	S	17,00	47,00	47,20	7,00	35
		.669	1.850	1.858	.276	
17X47X8	S	17,00	47,00	47,20	8,00	32
		.669	1.850	1.858	.315	
*17X28.5X7	S	17,00	28,30	28,50	7,00	32
		.669	1.114	1.122	.276	
*17X34.5X4	S	17,00	34,30	34,50	4,00	32
		.669	1.350	1.358	.157	
*17X31.75X8	S	17,00	31,55	31,75	8,00	32
		.669	1.242	1.250	.315	
*17.5X32X6	S	17,50	31,80	32,00	6,00	32
		.689	1.252	1.260	.236	
*17.6X30X7	S	17,60	29,80	30,00	7,00	32
		.693	1.173	1.181	.276	
*18X25X7	S	18,00	24,80	25,00	7,00	32
		.709	.976	.984	.276	
*18X26X7	S	18,00	25,80	26,00	7,00	32
		.709	1.016	1.024	.276	
*18X27X7	S	18,00	26,80	27,00	7,00	32
		.709	1.055	1.063	.276	
*18X28X7	S	18,00	27,80	28,00	7,00	32
		.709	1.094	1.102	.276	
*18X28X8	S	18,00	27,80	28,00	8,00	32
		.709	1.094	1.102	.315	
*18X28X10	S	18,00	27,80	28,00	10,00	32
		.709	1.094	1.102	.394	
18X28X6	S	18,00	28,00	28,28	6,00	32
		.709	1.102	1.113	.236	
*18X28X7V	V	18,00	28,00	28,20	7,00	35
		.709	1.102	1.110	.276	
*18X29X7	S	18,00	28,80	29,00	7,00	32
		.709	1.134	1.142	.276	
*18X30X6	S	18,00	29,80	30,00	6,00	32
		.709	1.173	1.181	.236	

For Illustration and Material Data See Technical Section

* The U.S. customer service number is 877-4-TIMKEN. The Canadian customer service numbers are 800-565-4927 (English) and 800-565-0438 (French-Canadian).

METRIC SERIES (cont.)

Part No.	Lip Mat'l	Shaft Size	Hsg. Bore	Seal O.D.	Seal Width	Type/ Illus.
*18X30X6	S	18,00	29,80	30,00	6,00	32
		.709	1.173	1.181	.236	
*18X30X8	S	18,00	29,80	30,00	8,00	32
		.709	1.173	1.181	.315	
*18X30X10	S	18,00	29,80	30,00	10,00	32
		.709	1.173	1.181	.394	
18X30X7	S	18,00	30,00	30,23	7,00	32
		.709	1.181	1.190	.276	
*18X31X7	S	18,00	30,80	31,00	7,00	32
		.709	1.212	1.220	.276	
*18X32X6	S	18,00	31,80	32,00	6,00	32
		.709	1.252	1.260	.236	
*18X32X10	S	18,00	31,80	32,00	10,00	32
		.709	1.252	1.260	.394	
18X32X7	S	18,00	32,00	32,20	7,00	35
		.709	1.260	1.268	.276	
*18X32X7V	V	18,00	32,00	32,20	7,00	35
		.709	1.260	1.268	.276	
18X32X8	S	18,00	32,00	32,22	8,00	32
		.709	1.260	1.269	.315	
*18X34X7	S	18,00	33,80	34,00	7,00	32
		.709	1.331	1.339	.276	
*18X35X8	S	18,00	34,80	35,00	8,00	32
		.709	1.370	1.378	.315	
*18X35X10	S	18,00	34,80	35,00	10,00	32
		.709	1.370	1.378	.394	
18X35X7	S	18,00	35,00	35,18	7,00	32
		.709	1.378	1.385	.276	
*18X35X8V	V	18,00	35,00	35,20	8,00	35
		.709	1.378	1.386	.315	
*18X36X7	S	18,00	36,00	36,20	7,00	32
		.709	1.417	1.425	.276	
*18X37X7	S	18,00	36,80	37,00	7,00	32
		.709	1.449	1.457	.276	
18X37X8	S	18,00	37,00	37,20	8,00	32
		.709	1.457	1.465	.315	
*18X38X10	S	18,00	37,80	38,00	10,00	32
		.709	1.488	1.496	.394	
18X38X7	S	18,00	38,00	38,20	7,00	32
		.709	1.496	1.504	.276	
*18X40X10	S	18,00	39,80	40,00	10,00	32
		.709	1.567	1.575	.394	
18X40X7	S	18,00	40,00	40,22	7,00	32
		.709	1.575	1.583	.276	
*18X40X7V	V	18,00	40,00	40,20	7,00	35
		.709	1.575	1.583	.276	
*18X42X7	S	18,00	41,80	42,00	7,00	32
		.709	1.646	1.654	.276	
*18X42X10	S	18,00	41,80	42,00	10,00	32
		.709	1.646	1.654	.394	
*19X25X6	S	19,00	24,80	25,00	6,00	32
		.748	.976	.984	.236	
*19X27X5	S	19,00	26,80	27,00	5,00	32
		.748	1.055	1.063	.197	
*19X27X10	S	19,00	26,80	27,00	10,00	32
		.748	1.055	1.063	.394	
19X27X6	S	19,00	27,00	27,20	6,00	35
		.748	1.063	1.071	.236	
*19X28X7	S	19,00	27,80	28,00	7,00	32
		.748	1.094	1.102	.276	
*19X29X7	S	19,00	28,80	29,00	7,00	32
		.748	1.134	1.142	.276	
19X30X7	**S**	**19,00**	**30,00**	**30,20**	**7,00**	**32**
		.748	**1.181**	**1.189**	**.276**	
*19X32X5	S	19,00	31,80	32,00	5,00	32
		.748	1.252	1.260	.197	
*19X32X6	S	19,00	31,80	32,00	6,00	32
		.748	1.252	1.260	.236	
*19X32X10	S	19,00	31,80	32,00	10,00	32
		.748	1.252	1.260	.394	

METRIC SERIES (cont.)

Part No.	Lip Mat'l	Shaft Size	Hsg. Bore	Seal O.D.	Seal Width	Type/ Illus.
19X32X7	S	19,00	32,00	32,20	7,00	35
		.748	1.260	1.268	.276	
19X32X8	S	19,00	32,00	32,20	8,00	32
		.748	1.260	1.268	.315	
*19X33X8	S	19,00	32,80	33,00	8,00	32
		.748	1.291	1.299	.315	
*19X34X7	S	19,00	33,80	34,00	7,00	32
		.748	1.331	1.339	.276	
*19X35X7	S	19,00	34,80	35,00	7,00	32
		.748	1.370	1.378	.276	
*19X35X8	S	19,00	34,80	35,00	8,00	32
		.748	1.370	1.378	.315	
19X35X10	S	19,00	35,00	35,23	10,00	32
		.748	1.378	1.387	.394	
*19X36X7	S	19,00	35,80	36,00	7,00	32
		.748	1.409	1.417	.276	
*19X37X10	S	19,00	36,80	37,00	10,00	32
		.748	1.449	1.457	.394	
*19X37X7	S	19,00	37,00	37,20	7,00	32
		.748	1.457	1.465	.276	
*19X38X8	S	19,00	37,80	38,00	8,00	32
		.748	1.488	1.496	.315	
*19X38X10	S	19,00	37,80	38,00	10,00	32
		.748	1.488	1.496	.394	
*19X38X7	S	19,00	38,00	38,20	7,00	32
		.748	1.496	1.504	.276	
*19X40X7	S	19,00	39,80	40,00	7,00	32
		.748	1.567	1.575	.276	
19X40X10	S	19,00	40,00	40,23	10,00	35
		.748	1.575	1.584	.394	
*19X41X7	S	19,00	40,80	41,00	7,00	32
		.748	1.606	1.614	.276	
*19X42X7	S	19,00	42,00	42,20	7,00	32
		.748	1.654	1.661	.276	
*19X45X7	S	19,00	45,00	45,20	7,00	32
		.748	1.772	1.780	.276	
*19X46X7	S	19,00	46,00	46,20	7,00	32
		.748	1.811	1.819	.276	
19X47X7	S	19,00	47,00	47,20	7,00	32
		.748	1.850	1.858	.276	
*19X33.5X7	S	19,00	33,30	33,50	7,00	32
		.748	1.311	1.319	.276	
*19.5X35X6	S	19,50	34,80	35,00	6,00	32
		.768	1.370	1.378	.236	
*19.8X30X5	S	19,80	29,80	30,00	5,00	32
		.780	1.173	1.181	.197	
*20X25X7	S	20,00	24,80	25,00	7,00	32
		.787	.976	.984	.276	
*20X26X4	S	20,00	25,80	26,00	4,00	32
		.787	1.016	1.024	.157	
*20X26X5	S	20,00	25,80	26,00	5,00	32
		.787	1.016	1.024	.197	
*20X26X5.6	S	20,00	25,80	26,00	5,60	32
		.787	1.016	1.024	.220	
*20X27X5	S	20,00	26,80	27,00	5,00	32
		.787	1.055	1.063	.197	
*20X28X4	S	20,00	27,80	28,00	4,00	32
		.787	1.094	1.102	.157	
*20X28X7	S	20,00	27,80	28,00	7,00	32
		.787	1.094	1.102	.276	
20X28X6	S	20,00	28,00	28,20	6,00	32
		.787	1.102	1.110	.236	
*20X30X6	S	20,00	29,80	30,00	6,00	32
		.787	1.173	1.181	.236	
*20X30X9	S	20,00	29,80	30,00	9,00	32
		.787	1.173	1.181	.354	
*20X30X10	S	20,00	29,80	30,00	10,00	32
		.787	1.173	1.181	.394	
*20X30X4.5	S	20,00	29,80	30,00	4,50	32
		.787	1.173	1.181	.177	

For Illustration and Material Data See Technical Section

* The U.S. customer service number is 877-4-TIMKEN. The Canadian customer service numbers are 800-565-4927 (English) and 800-565-0438 (French-Canadian).

METRIC SERIES (cont.)

Part No.	Lip Mat'l	Shaft Size	Hsg. Bore	Seal O.D.	Seal Width	Type/ Illus.
20X30X5	S	20,00	30,00	30,20	5,00	35
		.787	1.181	1.189	.197	
*20X30X5V	V	20,00	30,00	30,20	5,00	35
		.787	1.181	1.189	.197	
*20X30X5.5	S	20,00	29,80	30,00	5,50	32
		.787	1.173	1.181	.217	
20X30X7	S	20,00	30,00	30,28	7,00	35
		.787	1.181	1.192	.276	
*20X30X7V	V	20,00	30,00	30,20	7,00	35
		.787	1.181	1.189	.276	
*20X31X5	S	20,00	30,80	31,00	5,00	32
		.787	1.212	1.220	.197	
*20X31X7	S	20,00	31,00	31,20	7,00	32
		.787	1.220	1.228	.276	
*20X32X5	S	20,00	31,80	32,00	5,00	32
		.787	1.252	1.260	.197	
*20X32X6	S	20,00	31,80	32,00	6,00	32
		.787	1.252	1.260	.236	
*20X32X8	S	20,00	31,80	32,00	8,00	32
		.787	1.252	1.260	.315	
*20X32X10	S	20,00	31,80	32,00	10,00	32
		.787	1.252	1.260	.394	
20X32X7	S	20,00	32,00	32,23	7,00	32
		.787	1.260	1.269	.276	
*20X32X7.5	S	20,00	31,80	32,00	7,50	32
		.787	1.252	1.260	.295	
*20X33X7	S	20,00	32,80	33,00	7,00	32
		.787	1.291	1.299	.276	
*20X33X10	S	20,00	32,80	33,00	10,00	32
		.787	1.291	1.299	.394	
*20X34X7	S	20,00	33,80	34,00	7,00	32
		.787	1.331	1.339	.276	
*20X35X6	S	20,00	34,80	35,00	6,00	32
		.787	1.370	1.378	.236	
*20X35X8	S	20,00	34,80	35,00	8,00	32
		.787	1.370	1.378	.315	
*20X35X10	S	20,00	34,80	35,00	10,00	32
		.787	1.370	1.378	.394	
20X35X7	S	20,00	35,00	35,23	7,00	32
		.787	1.378	1.387	.276	
*20X36X8	S	20,00	35,80	36,00	8,00	32
		.787	1.409	1.417	.315	
*20X36X10	S	20,00	35,80	36,00	10,00	32
		.787	1.409	1.417	.394	
*20X36X12	S	20,00	35,80	36,00	12,00	32
		.787	1.409	1.417	.472	
20X36X7	S	20,00	36,00	36,20	7,00	32
		.787	1.417	1.425	.276	
*20X37X6	S	20,00	36,80	37,00	6,00	32
		.787	1.449	1.457	.236	
*20X37X10	S	20,00	36,80	37,00	10,00	32
		.787	1.449	1.457	.394	
20X37X7	S	20,00	37,00	37,20	7,00	32
		.787	1.457	1.465	.276	
20X37X8	S	20,00	37,00	37,20	8,00	32
		.787	1.457	1.465	.315	
*20X38X5	S	20,00	37,80	38,00	5,00	32
		.787	1.488	1.496	.197	
*20X38X8	S	20,00	37,80	38,00	8,00	32
		.787	1.488	1.496	.315	
*20X38X10	S	20,00	37,80	38,00	10,00	32
		.787	1.488	1.496	.394	
20X38X7	S	20,00	38,00	38,20	7,00	32
		.787	1.496	1.504	.276	
*20X39X6	S	20,00	38,80	39,00	6,00	32
		.787	1.527	1.535	.236	
*20X40X8	S	20,00	39,80	40,00	8,00	32
		.787	1.567	1.575	.315	
*20X40X9	S	20,00	39,80	40,00	9,00	32
		.787	1.567	1.575	.354	

METRIC SERIES (cont.)

Part No.	Lip Mat'l	Shaft Size	Hsg. Bore	Seal O.D.	Seal Width	Type/ Illus.
*20X40X12	S	20,00	39,80	40,00	12,00	32
		.787	1.567	1.575	.472	
20X40X7	S	20,00	40,00	40,23	7,00	32
		.787	1.575	1.584	.276	
*20X40X7V	V	20,00	40,00	40,20	7,00	32
		.787	1.575	1.583	.276	
20X40X10	S	20,00	40,00	40,23	10,00	35
		.787	1.575	1.584	.394	
*20X42X6	S	20,00	41,80	42,00	6,00	32
		.787	1.646	1.654	.236	
*20X42X8	S	20,00	41,80	42,00	8,00	32
		.787	1.646	1.654	.315	
20X42X7	S	20,00	42,00	42,25	7,00	32
		.787	1.654	1.663	.276	
*20X42X7V	V	20,00	42,00	42,25	7,00	35
		.787	1.654	1.663	.276	
20X42X10	S	20,00	42,00	42,15	10,00	45
		.787	1.654	1.659	.394	
*20X44X7	S	20,00	43,80	44,00	7,00	32
		.787	1.724	1.732	.276	
*20X45X7	S	20,00	44,80	45,00	7,00	32
		.787	1.764	1.772	.276	
*20X45X8	S	20,00	44,80	45,00	8,00	32
		.787	1.764	1.772	.315	
*20X45X10	S	20,00	44,80	45,00	10,00	32
		.787	1.764	1.772	.394	
*20X45X12	S	20,00	44,80	45,00	12,00	32
		.787	1.764	1.772	.472	
*20X46X8	S	20,00	45,80	46,00	8,00	32
		.787	1.803	1.811	.315	
*20X46X7	S	20,00	46,00	46,20	7,00	32
		.787	1.811	1.819	.276	
*20X47X6	S	20,00	46,80	47,00	6,00	32
		.787	1.842	1.850	.236	
*20X47X8	S	20,00	46,80	47,00	8,00	32
		.787	1.842	1.850	.315	
*20X47X9	S	20,00	46,80	47,00	9,00	32
		.787	1.842	1.850	.354	
*20X47X10	S	20,00	46,80	47,00	10,00	32
		.787	1.842	1.850	.394	
*20X47X12	S	20,00	46,80	47,00	12,00	32
		.787	1.842	1.850	.472	
*20X47X13	S	20,00	46,80	47,00	13,00	32
		.787	1.842	1.850	.512	
20X47X7	S	20,00	47,00	47,22	7,00	32
		.787	1.850	1.859	.276	
*20X47X7V	V	20,00	47,00	47,20	7,00	35
		.787	1.850	1.858	.276	
*20X48X8	S	20,00	47,80	48,00	8,00	32
		.787	1.882	1.890	.315	
*20X48X10	S	20,00	47,80	48,00	10,00	32
		.787	1.882	1.890	.394	
*20X48X7	S	20,00	48,00	48,20	7,00	32
		.787	1.890	1.898	.276	
*20X49X7	S	20,00	48,80	49,00	7,00	32
		.787	1.921	1.929	.276	
*20X50X8	S	20,00	49,80	50,00	8,00	32
		.787	1.961	1.969	.315	
*20X50X10	S	20,00	49,80	50,00	10,00	32
		.787	1.961	1.969	.394	
*20X50X7	S	20,00	50,00	50,20	7,00	32
		.787	1.969	1.976	.276	
*20X52X8	S	20,00	51,75	52,00	8,00	32
		.787	2.037	2.047	.315	
*20X52X9	S	20,00	51,75	52,00	9,00	32
		.787	2.037	2.047	.354	
*20X52X10	S	20,00	51,75	52,00	10,00	32
		.787	2.037	2.047	.394	
*20X52X12	S	20,00	51,75	52,00	12,00	32
		.787	2.037	2.047	.472	

For Illustration and Material Data See Technical Section

* The U.S. customer service number is 877-4-TIMKEN. The Canadian customer service numbers are 800-565-4927 (English) and 800-565-0438 (French-Canadian).

METRIC SERIES (cont.)

Part No.	Lip Mat'l	Shaft Size	Hsg. Bore	Seal O.D.	Seal Width	Type/ Illus.
20X52X7	S	20,00	52,00	52,20	7,00	32
		.787	2.047	2.055	.276	
*20X37.7X7	S	20,00	37,50	37,70	7,00	32
		.787	1.476	1.484	.276	
*20X39.8X6.5	S	20,00	39,60	39,80	6,50	32
		.787	1.559	1.567	.256	
*20X41.25X7	S	20,00	41,05	41,25	7,00	32
		.787	1.616	1.624	.276	
*21X31X7	S	21,00	30,80	31,00	7,00	32
		.827	1.212	1.220	.276	
*21X32X5	S	21,00	31,80	32,00	5,00	32
		.827	1.252	1.260	.197	
*21X33X7	S	21,00	32,80	33,00	7,00	32
		.827	1.291	1.299	.276	
21X35X7	S	21,00	35,00	35,20	7,00	32
		.827	1.378	1.386	.276	
21X35X8	S	21,00	35,00	35,20	8,00	32
		.827	1.378	1.386	.315	
*21X36X8	S	21,00	36,00	36,20	8,00	32
		.827	1.417	1.425	.315	
*21X37X7	S	21,00	36,80	37,00	7,00	32
		.827	1.449	1.457	.276	
*21X37X5.5	S	21,00	36,80	37,00	5,50	32
		.827	1.449	1.457	.217	
*21X37X8	S	21,00	37,00	37,20	8,00	32
		.827	1.457	1.465	.315	
*21X38X8	S	21,00	38,00	38,20	8,00	32
		.827	1.496	1.504	.315	
*21X40X7	S	21,00	39,80	40,00	7,00	32
		.827	1.567	1.575	.276	
*21X40X8	S	21,00	40,00	40,20	8,00	32
		.827	1.575	1.583	.315	
*21X52X8	S	21,00	52,00	52,20	8,00	32
		.827	2.047	2.055	.315	
*21.5X35X8	S	21,50	34,80	35,00	8,00	32
		.846	1.370	1.378	.315	
*21.7X35X6.5	S	21,70	34,80	35,00	6,50	32
		.854	1.370	1.378	.256	
*22X28X8	S	22,00	28,00	28,20	8,00	32
		.866	1.102	1.110	.315	
*22X30X7	S	22,00	29,80	30,00	7,00	32
		.866	1.173	1.181	.276	
*22X30X8	S	22,00	29,80	30,00	8,00	32
		.866	1.173	1.181	.315	
*22X31X7	S	22,00	30,80	31,00	7,00	32
		.866	1.212	1.220	.276	
22X31X6	S	22,00	31,00	31,20	6,00	32
		.866	1.220	1.228	.236	
*22X31X8	S	22,00	31,00	31,20	8,00	32
		.866	1.220	1.228	.315	
*22X32X5	S	22,00	31,80	32,00	5,00	32
		.866	1.252	1.260	.197	
*22X32X6	S	22,00	31,80	32,00	6,00	32
		.866	1.252	1.260	.236	
22X32X7	S	22,00	32,00	32,23	7,00	32
		.866	1.260	1.269	.276	
*22X32X7V	V	22,00	32,00	32,20	7,00	35
		.866	1.260	1.268	.276	
*22X33X7	S	22,00	32,80	33,00	7,00	32
		.866	1.291	1.299	.276	
*22X33X10	S	22,00	32,80	33,00	10,00	32
		.866	1.291	1.299	.394	
*22X34X7	S	22,00	33,80	34,00	7,00	32
		.866	1.331	1.339	.276	
*22X35X5	S	22,00	34,80	35,00	5,00	32
		.866	1.370	1.378	.197	
*22X35X8	S	22,00	34,80	35,00	8,00	32
		.866	1.370	1.378	.315	
*22X35X9	S	22,00	34,80	35,00	9,00	32
		.866	1.370	1.378	.354	

METRIC SERIES (cont.)

Part No.	Lip Mat'l	Shaft Size	Hsg. Bore	Seal O.D.	Seal Width	Type/ Illus.
*22X35X10	S	22,00	34,80	35,00	10,00	32
		.866	1.370	1.378	.394	
22X35X7	S	22,00	35,00	35,23	7,00	32
		.866	1.378	1.387	.276	
*22X35X7V	V	22,00	35,00	35,20	7,00	35
		.866	1.378	1.386	.276	
*22X36X8	S	22,00	35,80	36,00	8,00	32
		.866	1.409	1.417	.315	
*22X36X10	S	22,00	35,80	36,00	10,00	32
		.866	1.409	1.417	.394	
22X36X7	S	22,00	36,00	36,20	7,00	32
		.866	1.417	1.425	.276	
*22X37X6	S	22,00	36,80	37,00	6,00	32
		.866	1.449	1.457	.236	
22X37X7	S	22,00	37,00	37,23	7,00	35
		.866	1.457	1.466	.276	
22X38X7	S	22,00	38,00	38,20	7,00	35
		.866	1.496	1.504	.276	
*22X38X7V	V	22,00	38,00	38,20	7,00	35
		.866	1.496	1.504	.276	
22X38X8	S	22,00	38,00	38,20	8,00	32
		.866	1.496	1.504	.315	
*22X39X7	S	22,00	38,80	39,00	7,00	32
		.866	1.527	1.535	.276	
*22X40X4	S	22,00	39,80	40,00	4,00	32
		.866	1.567	1.575	.157	
*22X40X10	S	22,00	39,80	40,00	10,00	32
		.866	1.567	1.575	.394	
*22X40X11	S	22,00	39,80	40,00	11,00	32
		.866	1.567	1.575	.433	
*22X40X12	S	22,00	39,80	40,00	12,00	32
		.866	1.567	1.575	.472	
22X40X7	S	22,00	40,00	40,23	7,00	32
		.866	1.575	1.584	.276	
*22X40X7V	V	22,00	40,00	40,20	7,00	32
		.866	1.575	1.583	.276	
22X40X8	S	22,00	40,00	40,20	8,00	35
		.866	1.575	1.583	.315	
*22X42X6	S	22,00	41,80	42,00	6,00	32
		.866	1.646	1.654	.236	
*22X42X11	S	22,00	41,80	42,00	11,00	32
		.866	1.646	1.654	.433	
22X42X7	S	22,00	42,00	42,20	7,00	32
		.866	1.654	1.661	.276	
22X42X10	S	22,00	42,00	42,20	10,00	35
		.866	1.654	1.661	.394	
*22X44X7	S	22,00	43,80	44,00	7,00	32
		.866	1.724	1.732	.276	
*22X45X5	S	22,00	44,80	45,00	5,00	32
		.866	1.764	1.772	.197	
*22X45X8	S	22,00	44,80	45,00	8,00	32
		.866	1.764	1.772	.315	
*22X45X10	S	22,00	44,80	45,00	10,00	32
		.866	1.764	1.772	.394	
22X45X7	S	22,00	45,00	45,23	7,00	35
		.866	1.772	1.781	.276	
*22X46X8	S	22,00	46,00	46,20	8,00	32
		.866	1.811	1.819	.315	
*22X47X10	S	22,00	46,80	47,00	10,00	32
		.866	1.842	1.850	.394	
22X47X7	S	22,00	47,00	47,23	7,00	32
		.866	1.850	1.859	.276	
*22X48X7	S	22,00	47,80	48,00	7,00	32
		.866	1.882	1.890	.276	
*22X48X11	S	22,00	47,80	48,00	11,00	32
		.866	1.882	1.890	.433	
*22X48X8	S	22,00	48,00	48,20	8,00	32
		.866	1.890	1.898	.315	
*22X50X5	S	22,00	49,80	50,00	5,00	32
		.866	1.961	1.969	.197	

For Illustration and Material Data See Technical Section

* The U.S. customer service number is 877-4-TIMKEN. The Canadian customer service numbers are 800-565-4927 (English) and 800-565-0438 (French-Canadian).

METRIC SERIES (cont.)

Part No.	Lip Mat'l	Shaft Size	Hsg. Bore	Seal O.D.	Seal Width	Type/ Illus.
*22X50X10	S	22,00	49,80	50,00	10,00	32
		.866	1.961	1.969	.394	
*22X50X8	S	22,00	50,00	50,20	8,00	32
		.866	1.969	1.976	.315	
*22X52X10	S	22,00	51,75	52,00	10,00	32
		.866	2.037	2.047	.394	
*22X52X8	S	22,00	52,00	52,20	8,00	32
		.866	2.047	2.055	.315	
*22X56X7	S	22,00	55,75	56,00	7,00	32
		.866	2.195	2.205	.276	
*22X41.5X6	S	22,00	41,30	41,50	6,00	32
		.866	1.626	1.634	.236	
*22X41.25X6	S	22,00	41,05	41,25	6,00	32
		.866	1.616	1.624	.236	
*23X32X7	S	23,00	31,80	32,00	7,00	32
		.906	1.252	1.260	.276	
*23X35X7	S	23,00	34,80	35,00	7,00	32
		.906	1.370	1.378	.276	
*23X36X6	S	23,00	35,80	36,00	6,00	32
		.906	1.409	1.417	.236	
*23X36X7	S	23,00	35,80	36,00	7,00	32
		.906	1.409	1.417	.276	
*23X36X10	S	23,00	35,80	36,00	10,00	32
		.906	1.409	1.417	.394	
*23X36X13	S	23,00	35,80	36,00	13,00	32
		.906	1.409	1.417	.512	
*23X37X7	S	23,00	36,80	37,00	7,00	32
		.906	1.449	1.457	.276	
*23X38X7	S	23,00	37,80	38,00	7,00	32
		.906	1.488	1.496	.276	
*23X40X6	S	23,00	39,80	40,00	6,00	32
		.906	1.567	1.575	.236	
*23X40X10	S	23,00	39,80	40,00	10,00	32
		.906	1.567	1.575	.394	
*23X42X7	S	23,00	41,80	42,00	7,00	32
		.906	1.646	1.654	.276	
*23X43X8	S	23,00	42,80	43,00	8,00	32
		.906	1.685	1.693	.315	
*23X47X7	S	23,00	46,80	47,00	7,00	32
		.906	1.842	1.850	.276	
*23X47X8	S	23,00	46,80	47,00	8,00	32
		.906	1.842	1.850	.315	
*23X47X10	S	23,00	46,80	47,00	10,00	32
		.906	1.842	1.850	.394	
*24X32X4	S	24,00	31,80	32,00	4,00	32
		.945	1.252	1.260	.157	
*24X32X7	S	24,00	31,80	32,00	7,00	32
		.945	1.252	1.260	.276	
*24X33X7	S	24,00	32,80	33,00	7,00	32
		.945	1.291	1.299	.276	
*24X34X7	S	24,00	33,80	34,00	7,00	32
		.945	1.331	1.339	.276	
*24X35X6	S	24,00	34,80	35,00	6,00	32
		.945	1.370	1.378	.236	
*24X35X8	S	24,00	34,80	35,00	8,00	32
		.945	1.370	1.378	.315	
24X35X7	S	24,00	35,00	35,23	7,00	32
		.945	1.378	1.387	.276	
*24X36X7	S	24,00	35,80	36,00	7,00	32
		.945	1.409	1.417	.276	
*24X36X8	S	24,00	35,80	36,00	8,00	32
		.945	1.409	1.417	.315	
*24X36X7V	V	24,00	36,00	36,20	7,00	35
		.945	1.417	1.425	.276	
24X37X7	S	24,00	37,00	37,23	7,00	35
		.945	1.457	1.466	.276	
*24X38X8	S	24,00	37,80	38,00	8,00	32
		.945	1.488	1.496	.315	
*24X38X10	S	24,00	37,80	38,00	10,00	32
		.945	1.488	1.496	.394	

METRIC SERIES (cont.)

Part No.	Lip Mat'l	Shaft Size	Hsg. Bore	Seal O.D.	Seal Width	Type/ Illus.
24X38X7	S	24,00	38,00	38,20	7,00	32
		.945	1.496	1.504	.276	
*24X38X8.5	S	24,00	37,80	38,00	8,50	32
		.945	1.488	1.496	.335	
*24X40X8	S	24,00	39,80	40,00	8,00	32
		.945	1.567	1.575	.315	
*24X40X6V	V	24,00	40,00	40,20	6,00	35
		.945	1.575	1.583	.236	
24X40X7	S	24,00	40,00	40,23	7,00	32
		.945	1.575	1.584	.276	
24X42X7	S	24,00	42,00	42,20	7,00	32
		.945	1.654	1.661	.276	
*24X42X8	S	24,00	42,00	42,25	8,00	35
		.945	1.654	1.663	.315	
24X42X10	S	24,00	42,00	42,25	10,00	32
		.945	1.654	1.663	.394	
*24X43X6	S	24,00	42,80	43,00	6,00	32
		.945	1.685	1.693	.236	
*24X43X7	S	24,00	42,80	43,00	7,00	32
		.945	1.685	1.693	.276	
*24X45X6	S	24,00	44,80	45,00	6,00	32
		.945	1.764	1.772	.236	
*24X45X7	S	24,00	44,80	45,00	7,00	32
		.945	1.764	1.772	.276	
*24X45X11	S	24,00	44,80	45,00	11,00	32
		.945	1.764	1.772	.433	
*24X45X8	S	24,00	45,00	45,20	8,00	32
		.945	1.772	1.780	.315	
*24X46X10	S	24,00	45,80	46,00	10,00	32
		.945	1.803	1.811	.394	
*24X46X8	S	24,00	46,00	46,20	8,00	32
		.945	1.811	1.819	.315	
*24X47X10	S	24,00	46,80	47,00	10,00	32
		.945	1.842	1.850	.394	
24X47X7	S	24,00	47,00	47,23	7,00	32
		.945	1.850	1.859	.276	
*24X48X7	S	24,00	47,80	48,00	7,00	32
		.945	1.882	1.890	.276	
*24X48X8	S	24,00	48,00	48,20	8,00	32
		.945	1.890	1.898	.315	
*24X49X12	S	24,00	48,80	49,00	12,00	32
		.945	1.921	1.929	.472	
*24X50X8	S	24,00	50,00	50,20	8,00	32
		.945	1.969	1.976	.315	
24X52X7	S	24,00	52,00	52,20	7,00	32
		.945	2.047	2.055	.276	
*24X77X18	S	24,00	76,72	77,00	18,00	32
		.945	3.020	3.031	.709	
*25X32X4	S	25,00	31,80	32,00	4,00	32
		.984	1.252	1.260	.157	
*25X32X6	S	25,00	31,80	32,00	6,00	32
		.984	1.252	1.260	.236	
*25X32X7	S	25,00	31,80	32,00	7,00	32
		.984	1.252	1.260	.276	
*25X33X6	S	25,00	32,80	33,00	6,00	32
		.984	1.291	1.299	.236	
*25X34X5	S	25,00	33,80	34,00	5,00	32
		.984	1.331	1.339	.197	
*25X35X5	S	25,00	34,80	35,00	5,00	32
		.984	1.370	1.378	.197	
*25X35X8	S	25,00	34,80	35,00	8,00	32
		.984	1.370	1.378	.315	
*25X35X9	S	25,00	34,80	35,00	9,00	32
		.984	1.370	1.378	.354	
*25X35X10	S	25,00	34,80	35,00	10,00	32
		.984	1.370	1.378	.394	
25X35X6	S	25,00	35,00	35,20	6,00	32
		.984	1.378	1.386	.236	
25X35X7	S	25,00	35,00	35,25	7,00	35
		.984	1.378	1.388	.276	

For Illustration and Material Data See Technical Section

* The U.S. customer service number is 877-4-TIMKEN. The Canadian customer service numbers are 800-565-4927 (English) and 800-565-0438 (French-Canadian).

METRIC SERIES (cont.)

Part No.	Lip Mat'l	Shaft Size	Hsg. Bore	Seal O.D.	Seal Width	Type/ Illus.
*25X35X7V	V	25,00	35,00	35,10	7,00	48
		.984	1.378	1.382	.276	
*25X35X8.5	S	25,00	34,80	35,00	8,50	32
		.984	1.370	1.378	.335	
*25X36X6	S	25,00	35,80	36,00	6,00	32
		.984	1.409	1.417	.236	
25X36X7	S	25,00	36,00	36,23	7,00	32
		.984	1.417	1.426	.276	
25X36X8	S	25,00	36,00	36,22	8,00	32
		.984	1.417	1.426	.315	
*25X37X5	S	25,00	36,80	37,00	5,00	32
		.984	1.449	1.457	.197	
*25X37X6	S	25,00	36,80	37,00	6,00	32
		.984	1.449	1.457	.236	
*25X37X8	S	25,00	36,80	37,00	8,00	32
		.984	1.449	1.457	.315	
*25X37X5V	V	25,00	37,00	37,20	5,00	35
		.984	1.457	1.465	.197	
25X37X7	S	25,00	37,00	37,20	7,00	32
		.984	1.457	1.465	.276	
*25X38X6	S	25,00	37,80	38,00	6,00	32
		.984	1.488	1.496	.236	
*25X38X8	S	25,00	37,80	38,00	8,00	32
		.984	1.488	1.496	.315	
*25X38X10	S	25,00	37,80	38,00	10,00	32
		.984	1.488	1.496	.394	
25X38X7	S	25,00	38,00	38,23	7,00	32
		.984	1.496	1.505	.276	
*25X38X7V	V	25,00	38,00	38,20	7,00	35
		.984	1.496	1.504	.276	
*25X39X8	S	25,00	38,80	39,00	8,00	32
		.984	1.527	1.535	.315	
*25X40X5	S	25,00	39,80	40,00	5,00	32
		.984	1.567	1.575	.197	
*25X40X6	S	25,00	39,80	40,00	6,00	32
		.984	1.567	1.575	.236	
*25X40X6	S	25,00	39,80	40,00	6,00	32
		.984	1.567	1.575	.236	
*25X40X8	S	25,00	39,80	40,00	8,00	32
		.984	1.567	1.575	.315	
*25X40X10	S	25,00	39,80	40,00	10,00	32
		.984	1.567	1.575	.394	
*25X40X11	S	25,00	39,80	40,00	11,00	32
		.984	1.567	1.575	.433	
*25X40X12	S	25,00	39,80	40,00	12,00	32
		.984	1.567	1.575	.472	
25X40X7	S	25,00	40,00	40,22	7,00	32
		.984	1.575	1.583	.276	
*25X40X7V	V	25,00	40,00	40,20	7,00	35
		.984	1.575	1.583	.276	
*25X41X6	S	25,00	40,80	41,00	6,00	32
		.984	1.606	1.614	.236	
*25X41X7	S	25,00	40,80	41,00	7,00	32
		.984	1.606	1.614	.276	
*25X42X7	S	25,00	41,80	42,00	7,00	32
		.984	1.646	1.654	.276	
*25X42X12	S	25,00	41,80	42,00	12,00	32
		.984	1.646	1.654	.472	
*25X42X5.5	S	25,00	41,80	42,00	5,50	32
		.984	1.646	1.654	.217	
25X42X6	S	25,00	42,00	42,20	6,00	32
		.984	1.654	1.661	.236	
*25X42X7V	V	25,00	42,00	42,20	7,00	32
		.984	1.654	1.661	.276	
25X42X8	S	25,00	42,00	42,20	8,00	32
		.984	1.654	1.661	.315	
*25X42X8.5	S	25,00	41,80	42,00	8,50	32
		.984	1.646	1.654	.335	
25X42X10	S	25,00	42,00	42,28	10,00	35
		.984	1.654	1.665	.394	

METRIC SERIES (cont.)

Part No.	Lip Mat'l	Shaft Size	Hsg. Bore	Seal O.D.	Seal Width	Type/ Illus.
*25X43X7	S	25,00	42,80	43,00	7,00	32
		.984	1.685	1.693	.276	
*25X43X9	S	25,00	42,80	43,00	9,00	32
		.984	1.685	1.693	.354	
*25X43X10	S	25,00	42,80	43,00	10,00	32
		.984	1.685	1.693	.394	
*25X44X7	S	25,00	43,80	44,00	7,00	32
		.984	1.724	1.732	.276	
*25X44X8	S	25,00	43,80	44,00	8,00	32
		.984	1.724	1.732	.315	
*25X45X7	S	25,00	44,80	45,00	7,00	32
		.984	1.764	1.772	.276	
*25X45X9	S	25,00	44,80	45,00	9,00	32
		.984	1.764	1.772	.354	
*25X45X10	S	25,00	44,80	45,00	10,00	32
		.984	1.764	1.772	.394	
*25X45X11	S	25,00	44,80	45,00	11,00	32
		.984	1.764	1.772	.433	
*25X45X12	S	25,00	44,80	45,00	12,00	32
		.984	1.764	1.772	.472	
25X45X8	S	25,00	45,00	45,23	8,00	32
		.984	1.772	1.781	.315	
25X46X7	S	25,00	46,00	46,20	7,00	32
		.984	1.811	1.819	.276	
*25X46X8	S	25,00	46,00	46,20	8,00	32
		.984	1.811	1.819	.315	
*25X47X6	S	25,00	46,80	47,00	6,00	32
		.984	1.842	1.850	.236	
*25X47X8	S	25,00	46,80	47,00	8,00	32
		.984	1.842	1.850	.315	
*25X47X10	S	25,00	46,80	47,00	10,00	32
		.984	1.842	1.850	.394	
25X47X7	S	25,00	47,00	47,23	7,00	32
		.984	1.850	1.859	.276	
*25X47X10V	V	25,00	47,00	47,20	10,00	35
		.984	1.850	1.858	.394	
*25X48X7	S	25,00	47,80	48,00	7,00	32
		.984	1.882	1.890	.276	
*25X48X10	S	25,00	47,80	48,00	10,00	32
		.984	1.882	1.890	.394	
25X48X8	S	25,00	48,00	48,20	8,00	32
		.984	1.890	1.898	.315	
*25X49X10	S	25,00	48,80	49,00	10,00	32
		.984	1.921	1.929	.394	
*25X50X12	S	25,00	49,80	50,00	12,00	32
		.984	1.961	1.969	.472	
25X50X8	S	25,00	50,00	50,20	8,00	32
		.984	1.969	1.976	.315	
25X50X10	S	25,00	50,00	50,28	10,00	35
		.984	1.969	1.980	.394	
*25X50X10V	V	25,00	50,00	50,20	10,00	35
		.984	1.969	1.976	.394	
*25X52X12	S	25,00	51,75	52,00	12,00	32
		.984	2.037	2.047	.472	
25X52X7	S	25,00	52,00	52,27	7,00	32
		.984	2.047	2.058	.276	
*25X52X7V	V	25,00	52,00	52,20	7,00	35
		.984	2.047	2.055	.276	
25X52X8	S	25,00	52,00	52,20	8,00	35
		.984	2.047	2.055	.315	
*25X52X9.5	S	25,00	51,75	52,00	9,50	32
		.984	2.037	2.047	.374	
25X52X10	S	25,00	52,00	52,20	10,00	35
		.984	2.047	2.055	.394	
*25X53X10	S	25,00	52,75	53,00	10,00	32
		.984	2.077	2.087	.394	
*25X54X8	S	25,00	54,00	54,20	8,00	32
		.984	2.126	2.134	.315	
*25X55X10	S	25,00	54,75	55,00	10,00	32
		.984	2.155	2.165	.394	

For Illustration and Material Data See Technical Section

* The U.S. customer service number is 877-4-TIMKEN. The Canadian customer service numbers are 800-565-4927 (English) and 800-565-0438 (French-Canadian).

METRIC SERIES (cont.)

Part No.	Lip Mat'l	Shaft Size	Hsg. Bore	Seal O.D.	Seal Width	Type/ Illus.
*25X55X12	S	25,00	54,75	55,00	12,00	32
		.984	2.155	2.165	.472	
*25X55X8	S	25,00	55,00	55,20	8,00	32
		.984	2.165	2.173	.315	
*25X56X8	S	25,00	56,00	56,20	8,00	32
		.984	2.205	2.213	.315	
*25X58X10	S	25,00	57,75	58,00	10,00	32
		.984	2.273	2.283	.394	
*25X58X8	S	25,00	58,00	58,20	8,00	32
		.984	2.283	2.291	.315	
*25X60X10	S	25,00	59,75	60,00	10,00	32
		.984	2.352	2.362	.394	
*25X60X8	S	25,00	60,00	60,20	8,00	32
		.984	2.362	2.370	.315	
*25X62X8	S	25,00	61,75	62,00	8,00	32
		.984	2.431	2.441	.315	
25X62X7	S	25,00	62,00	62,20	7,00	32
		.984	2.441	2.449	.276	
*25X62X7V	V	25,00	62,00	62,20	7,00	35
		.984	2.441	2.449	.276	
25X62X10	S	25,00	62,00	62,28	10,00	32
		.984	2.441	2.452	.394	
*25X65X10	S	25,00	64,75	65,00	10,00	32
		.984	2.549	2.559	.394	
*25X66X8.5	S	25,00	65,75	66,00	8,50	32
		.984	2.588	2.598	.335	
*25X70X10	S	25,00	69,75	70,00	10,00	32
		.984	2.746	2.756	.394	
*25X72X8	S	25,00	71,75	72,00	8,00	32
		.984	2.825	2.835	.315	
*25X80X10	S	25,00	79,72	80,00	10,00	32
		.984	3.139	3.150	.394	
*25X41.2X8	S	25,00	41,00	41,20	8,00	32
		.984	1.614	1.622	.315	
*25X41.5X7	S	25,00	41,30	41,50	7,00	32
		.984	1.626	1.634	.276	
*25X41.5X10	S	25,00	41,30	41,50	10,00	32
		.984	1.626	1.634	.394	
*25X42.9X9.5	S	25,00	42,70	42,90	9,50	32
		.984	1.681	1.689	.374	
*25X41.25X6	S	25,00	41,05	41,25	6,00	32
		.984	1.616	1.624	.236	
*25X41.25X7	S	25,00	41,05	41,25	7,00	32
		.984	1.616	1.624	.276	
*25X44.45X10	S	25,00	44,25	44,45	10,00	32
		.984	1.742	1.750	.394	
*25.7X35X7	S	25,70	34,80	35,00	7,00	32
		1.012	1.370	1.378	.276	
*26X35X7	S	26,00	34,80	35,00	7,00	32
		1.024	1.370	1.378	.276	
*26X36X5	S	26,00	35,80	36,00	5,00	32
		1.024	1.409	1.417	.197	
*26X36X7	S	26,00	35,80	36,00	7,00	32
		1.024	1.409	1.417	.276	
*26X37X8	S	26,00	36,80	37,00	8,00	32
		1.024	1.449	1.457	.315	
26X37X7	S	26,00	37,00	37,20	7,00	32
		1.024	1.457	1.465	.276	
*26X38X7	S	26,00	37,80	38,00	7,00	32
		1.024	1.488	1.496	.276	
*26X38X8	S	26,00	37,80	38,00	8,00	32
		1.024	1.488	1.496	.315	
26X38X5	S	26,00	38,00	38,20	5,00	32
		1.024	1.496	1.504	.197	
*26X40X8	S	26,00	39,80	40,00	8,00	32
		1.024	1.567	1.575	.315	
*26X40X10	S	26,00	39,80	40,00	10,00	32
		1.024	1.567	1.575	.394	
26X40X7	S	26,00	40,00	40,20	7,00	32
		1.024	1.575	1.583	.276	

METRIC SERIES (cont.)

Part No.	Lip Mat'l	Shaft Size	Hsg. Bore	Seal O.D.	Seal Width	Type/ Illus.
*26X42X8	S	26,00	41,80	42,00	8,00	32
		1.024	1.646	1.654	.315	
26X42X7	S	26,00	42,00	42,20	7,00	32
		1.024	1.654	1.661	.276	
26X42X10	S	26,00	42,00	42,23	10,00	32
		1.024	1.654	1.663	.394	
*26X43X8	S	26,00	42,80	43,00	8,00	32
		1.024	1.685	1.693	.315	
*26X44X7	S	26,00	43,80	44,00	7,00	32
		1.024	1.724	1.732	.276	
*26X45X7	S	26,00	44,80	45,00	7,00	32
		1.024	1.764	1.772	.276	
*26X45X10	S	26,00	44,80	45,00	10,00	32
		1.024	1.764	1.772	.394	
*26X45X8	S	26,00	45,00	45,20	8,00	32
		1.024	1.772	1.780	.315	
*26X46X8	S	26,00	46,00	46,20	8,00	32
		1.024	1.811	1.819	.315	
*26X47X6	S	26,00	46,80	47,00	6,00	32
		1.024	1.842	1.850	.236	
*26X47X8	S	26,00	46,80	47,00	8,00	32
		1.024	1.842	1.850	.315	
*26X47X10	S	26,00	46,80	47,00	10,00	32
		1.024	1.842	1.850	.394	
*26X47X11	S	26,00	46,80	47,00	11,00	32
		1.024	1.842	1.850	.433	
*26X47X12	S	26,00	46,80	47,00	12,00	32
		1.024	1.842	1.850	.472	
26X47X7	S	26,00	47,00	47,23	7,00	32
		1.024	1.850	1.859	.276	
*26X48X8	S	26,00	47,80	48,00	8,00	32
		1.024	1.882	1.890	.315	
26X48X7	S	26,00	48,00	48,23	7,00	32
		1.024	1.890	1.899	.276	
*26X50X7	S	26,00	49,80	50,00	7,00	32
		1.024	1.961	1.969	.276	
*26X50X10	S	26,00	49,80	50,00	10,00	32
		1.024	1.961	1.969	.394	
*26X50X8	S	26,00	50,00	50,20	8,00	32
		1.024	1.969	1.976	.315	
*26X52X7	S	26,00	51,75	52,00	7,00	32
		1.024	2.037	2.047	.276	
26X52X8	S	26,00	52,00	52,20	8,00	32
		1.024	2.047	2.055	.315	
*26X62X9	S	26,00	61,75	62,00	9,00	32
		1.024	2.431	2.441	.354	
*26X72X10	S	26,00	71,75	72,00	10,00	32
		1.024	2.825	2.835	.394	
*26X41.3X10	S	26,00	41,10	41,30	10,00	32
		1.024	1.618	1.626	.394	
*27X36X6	S	27,00	35,80	36,00	6,00	32
		1.063	1.409	1.417	.236	
27X37X7	S	27,00	37,00	37,15	7,00	35
		1.063	1.457	1.463	.276	
*27X37X7V	V	27,00	37,00	37,20	7,00	35
		1.063	1.457	1.465	.276	
*27X37X8.5	S	27,00	36,80	37,00	8,50	32
		1.063	1.449	1.457	.335	
*27X38X5	S	27,00	37,80	38,00	5,00	32
		1.063	1.488	1.496	.197	
*27X38X6	S	27,00	37,80	38,00	6,00	32
		1.063	1.488	1.496	.236	
*27X40X6	S	27,00	39,80	40,00	6,00	32
		1.063	1.567	1.575	.236	
*27X40X7	S	27,00	39,80	40,00	7,00	32
		1.063	1.567	1.575	.276	
*27X40X8	S	27,00	39,80	40,00	8,00	32
		1.063	1.567	1.575	.315	
*27X40X10	S	27,00	39,80	40,00	10,00	32
		1.063	1.567	1.575	.394	

For Illustration and Material Data See Technical Section

* The U.S. customer service number is 877-4-TIMKEN. The Canadian customer service numbers are 800-565-4927 (English) and 800-565-0438 (French-Canadian).

METRIC SERIES (cont.)

Part No.	Lip Mat'l	Shaft Size	Hsg. Bore	Seal O.D.	Seal Width	Type/ Illus.
*27X40X12	S	*27,00*	*39,80*	*40,00*	*12,00*	32
		1.063	1.567	1.575	.472	
*27X42X5	S	*27,00*	*41,80*	*42,00*	*5,00*	32
		1.063	1.646	1.654	.197	
*27X42X8	S	*27,00*	*41,80*	*42,00*	*8,00*	32
		1.063	1.646	1.654	.315	
27X42X7	S	*27,00*	*42,00*	*42,20*	*7,00*	35
		1.063	1.654	1.661	.276	
27X42X10	S	*27,00*	*42,00*	*42,23*	*10,00*	35
		1.063	1.654	1.663	.394	
*27X43X9	S	*27,00*	*42,80*	*43,00*	*9,00*	32
		1.063	1.685	1.693	.354	
27X43X8	S	*27,00*	*43,00*	*43,20*	*8,00*	32
		1.063	1.693	1.701	.315	
27X45X8	S	*27,00*	*45,00*	*45,25*	*8,00*	35
		1.063	1.772	1.781	.315	
*27X46X8	S	*27,00*	*46,00*	*46,20*	*8,00*	32
		1.063	1.811	1.819	.315	
*27X47X7	S	*27,00*	*46,80*	*47,00*	*7,00*	32
		1.063	1.842	1.850	.276	
*27X47X8	S	*27,00*	*47,00*	*47,23*	*8,00*	35
		1.063	1.850	1.859	.315	
27X47X10	S	*27,00*	*47,00*	*47,23*	*10,00*	35
		1.063	1.850	1.859	.394	
*27X48X8	S	*27,00*	*48,00*	*48,20*	*8,00*	32
		1.063	1.890	1.898	.315	
*27X50X10	S	*27,00*	*49,80*	*50,00*	*10,00*	32
		1.063	1.961	1.969	.394	
*27X50X8	S	*27,00*	*50,00*	*50,20*	*8,00*	32
		1.063	1.969	1.976	.315	
27X52X8	S	*27,00*	*52,00*	*52,20*	*8,00*	35
		1.063	2.047	2.055	.315	
*27X53X7	S	*27,00*	*52,75*	*53,00*	*7,00*	32
		1.063	2.077	2.087	.276	
*27.6X40X5.5	S	*27,60*	*39,80*	*40,00*	*5,50*	32
		1.087	1.567	1.575	.217	
*28X35X5	S	*28,00*	*34,80*	*35,00*	*5,00*	32
		1.102	1.370	1.378	.197	
*28X35X7	S	*28,00*	*34,80*	*35,00*	*7,00*	32
		1.102	1.370	1.378	.276	
*28X35X10	S	*28,00*	*34,80*	*35,00*	*10,00*	32
		1.102	1.370	1.378	.394	
*28X36X7	S	*28,00*	*35,80*	*36,00*	*7,00*	32
		1.102	1.409	1.417	.276	
*28X38X5	S	*28,00*	*37,80*	*38,00*	*5,00*	32
		1.102	1.488	1.496	.197	
*28X38X8	S	*28,00*	*37,80*	*38,00*	*8,00*	32
		1.102	1.488	1.496	.315	
28X38X7	S	*28,00*	*38,00*	*38,23*	*7,00*	32
		1.102	1.496	1.505	.276	
*28X40X9	S	*28,00*	*39,80*	*40,00*	*9,00*	32
		1.102	1.567	1.575	.354	
*28X40X10	S	*28,00*	*39,80*	*40,00*	*10,00*	32
		1.102	1.567	1.575	.394	
28X40X7	S	*28,00*	*40,00*	*40,26*	*7,00*	32
		1.102	1.575	1.585	.276	
*28X40X7V	V	*28,00*	*40,00*	*40,20*	*7,00*	35
		1.102	1.575	1.583	.276	
28X40X8	S	*28,00*	*40,00*	*40,20*	*8,00*	32
		1.102	1.575	1.583	.315	
*28X42X6	S	*28,00*	*41,80*	*42,00*	*6,00*	32
		1.102	1.646	1.654	.236	
*28X42X7	S	*28,00*	*41,80*	*42,00*	*7,00*	32
		1.102	1.646	1.654	.276	
*28X42X10	S	*28,00*	*41,80*	*42,00*	*10,00*	32
		1.102	1.646	1.654	.394	
28X42X8	S	*28,00*	*42,00*	*42,23*	*8,00*	35
		1.102	1.654	1.663	.315	
*28X42X10V	V	*28,00*	*42,00*	*42,20*	*10,00*	35
		1.102	1.654	1.661	.394	

METRIC SERIES (cont.)

Part No.	Lip Mat'l	Shaft Size	Hsg. Bore	Seal O.D.	Seal Width	Type/ Illus.
*28X43X6	S	*28,00*	*42,80*	*43,00*	*6,00*	32
		1.102	1.685	1.693	.236	
*28X43X10	S	*28,00*	*42,80*	*43,00*	*10,00*	32
		1.102	1.685	1.693	.394	
*28X44X7	S	*28,00*	*43,80*	*44,00*	*7,00*	32
		1.102	1.724	1.732	.276	
*28X44X8	S	*28,00*	*43,80*	*44,00*	*8,00*	32
		1.102	1.724	1.732	.315	
28X44X6	N	*28,00*	*44,00*	*44,23*	*6,00*	32
		1.102	1.732	1.741	.236	
*28X45X7	S	*28,00*	*44,80*	*45,00*	*7,00*	32
		1.102	1.764	1.772	.276	
*28X45X10	S	*28,00*	*44,80*	*45,00*	*10,00*	32
		1.102	1.764	1.772	.394	
*28X45X7V	V	*28,00*	*45,00*	*45,20*	*7,00*	35
		1.102	1.772	1.780	.276	
28X45X8	S	*28,00*	*45,00*	*45,20*	*8,00*	32
		1.102	1.772	1.780	.315	
*28X45X8.7	S	*28,00*	*44,80*	*45,00*	*8,70*	32
		1.102	1.764	1.772	.343	
*28X46X8	S	*28,00*	*46,00*	*46,20*	*8,00*	32
		1.102	1.811	1.819	.315	
*28X47X6	S	*28,00*	*46,80*	*47,00*	*6,00*	32
		1.102	1.842	1.850	.236	
*28X47X9	S	*28,00*	*46,80*	*47,00*	*9,00*	32
		1.102	1.842	1.850	.354	
*28X47X10	S	*28,00*	*46,80*	*47,00*	*10,00*	32
		1.102	1.842	1.850	.394	
28X47X7	S	*28,00*	*47,00*	*47,22*	*7,00*	32
		1.102	1.850	1.859	.276	
*28X47X7V	V	*28,00*	*47,00*	*47,20*	*7,00*	35
		1.102	1.850	1.858	.276	
*28X47X8	S	*28,00*	*47,00*	*47,22*	*8,00*	33
		1.102	1.850	1.859	.315	
*28X48X7	S	*28,00*	*47,80*	*48,00*	*7,00*	32
		1.102	1.882	1.890	.276	
*28X48X11	S	*28,00*	*47,80*	*48,00*	*11,00*	32
		1.102	1.882	1.890	.433	
28X48X8	S	*28,00*	*48,00*	*48,20*	*8,00*	32
		1.102	1.890	1.898	.315	
*28X50X10	S	*28,00*	*49,80*	*50,00*	*10,00*	32
		1.102	1.961	1.969	.394	
*28X50X8	S	*28,00*	*50,00*	*50,20*	*8,00*	32
		1.102	1.969	1.976	.315	
*28X51X10	S	*28,00*	*50,75*	*51,00*	*10,00*	32
		1.102	1.998	2.008	.394	
*28X52X6	S	*28,00*	*51,75*	*52,00*	*6,00*	32
		1.102	2.037	2.047	.236	
*28X52X8	S	*28,00*	*51,75*	*52,00*	*8,00*	32
		1.102	2.037	2.047	.315	
*28X52X10	S	*28,00*	*51,75*	*52,00*	*10,00*	32
		1.102	2.037	2.047	.394	
28X52X7	S	*28,00*	*52,00*	*52,23*	*7,00*	32
		1.102	2.047	2.056	.276	
*28X52X7V	V	*28,00*	*52,00*	*52,20*	*7,00*	32
		1.102	2.047	2.055	.276	
*28X56X6	S	*28,00*	*55,75*	*56,00*	*6,00*	32
		1.102	2.195	2.205	.236	
*28X56X7	S	*28,00*	*55,75*	*56,00*	*7,00*	32
		1.102	2.195	2.205	.276	
*28X58X6	S	*28,00*	*57,75*	*58,00*	*6,00*	32
		1.102	2.273	2.283	.236	
*28X58X10	S	*28,00*	*57,75*	*58,00*	*10,00*	32
		1.102	2.273	2.283	.394	
*28X62X10	S	*28,00*	*61,75*	*62,00*	*10,00*	32
		1.102	2.431	2.441	.394	
*28X41.5X8	S	*28,00*	*41,30*	*41,50*	*8,00*	32
		1.102	1.626	1.634	.315	
*28X42.5X8	S	*28,00*	*42,30*	*42,50*	*8,00*	32
		1.102	1.665	1.673	.315	

For Illustration and Material Data See Technical Section

* The U.S. customer service number is 877-4-TIMKEN. The Canadian customer service numbers are 800-565-4927 (English) and 800-565-0438 (French-Canadian).

METRIC SERIES (cont.)

Part No.	Lip Mat'l	Shaft Size	Hsg. Bore	Seal O.D.	Seal Width	Type/ Illus.
*28X41.25X6	S	28,00	41,05	41,25	6,00	32
		1.102	1.616	1.624	.236	
*28.5X39.5X9.5	S	28,50	39,30	39,50	9,50	32
		1.122	1.547	1.555	.374	
*28.6X40X8	S	28,60	39,80	40,00	8,00	32
		1.126	1.567	1.575	.315	
*29X43X8	S	29,00	42,80	43,00	8,00	32
		1.142	1.685	1.693	.315	
*29X44X7	S	29,00	43,80	44,00	7,00	32
		1.142	1.724	1.732	.276	
*29X45X9	S	29,00	44,80	45,00	9,00	32
		1.142	1.764	1.772	.354	
*29X46X10	S	29,00	45,80	46,00	10,00	32
		1.142	1.803	1.811	.394	
*29X47X8	S	29,00	46,80	47,00	8,00	32
		1.142	1.842	1.850	.315	
*29X47X10	S	29,00	46,80	47,00	10,00	32
		1.142	1.842	1.850	.394	
*29X50X10	S	29,00	49,80	50,00	10,00	32
		1.142	1.961	1.969	.394	
*29X56X10	S	29,00	55,75	56,00	10,00	32
		1.142	2.195	2.205	.394	
*29X62.2X9	S	29,00	61,95	62,20	9,00	32
		1.142	2.439	2.449	.354	
*30X37X6	S	30,00	36,80	37,00	6,00	32
		1.181	1.449	1.457	.236	
*30X38X5	S	30,00	37,80	38,00	5,00	32
		1.181	1.488	1.496	.197	
*30X38X6	S	30,00	37,80	38,00	6,00	32
		1.181	1.488	1.496	.236	
*30X38X7	S	30,00	37,80	38,00	7,00	32
		1.181	1.488	1.496	.276	
*30X40X5	S	30,00	39,80	40,00	5,00	32
		1.181	1.567	1.575	.197	
*30X40X8	S	30,00	39,80	40,00	8,00	32
		1.181	1.567	1.575	.315	
*30X40X10	S	30,00	39,80	40,00	10,00	32
		1.181	1.567	1.575	.394	
*30X40X12	S	30,00	39,80	40,00	12,00	32
		1.181	1.567	1.575	.472	
30X40X7	S	30,00	40,00	40,23	7,00	32
		1.181	1.575	1.584	.276	
*30X40X7V	V	30,00	40,00	40,20	7,00	32
		1.181	1.575	1.583	.276	
*30X41X7	S	30,00	40,80	41,00	7,00	32
		1.181	1.606	1.614	.276	
*30X42X8	S	30,00	41,80	42,00	8,00	32
		1.181	1.646	1.654	.315	
*30X42X10	S	30,00	41,80	42,00	10,00	32
		1.181	1.646	1.654	.394	
*30X42X4.5	S	30,00	41,80	42,00	4,50	32
		1.181	1.646	1.654	.177	
30X42X7	S	30,00	42,00	42,20	7,00	35
		1.181	1.654	1.661	.276	
*30X42X7V	V	30,00	42,00	42,20	7,00	32
		1.181	1.654	1.661	.276	
*30X43X7	S	30,00	42,80	43,00	7,00	32
		1.181	1.685	1.693	.276	
*30X43X8	S	30,00	42,80	43,00	8,00	32
		1.181	1.685	1.693	.315	
*30X43X9	S	30,00	42,80	43,00	9,00	32
		1.181	1.685	1.693	.354	
*30X43X8.5	S	30,00	42,80	43,00	8,50	32
		1.181	1.685	1.693	.335	
*30X44X9	S	30,00	43,80	44,00	9,00	32
		1.181	1.724	1.732	.354	
*30X44X10	S	30,00	43,80	44,00	10,00	32
		1.181	1.724	1.732	.394	
30X44X7	S	30,00	44,00	44,28	7,00	32
		1.181	1.732	1.743	.276	

METRIC SERIES (cont.)

Part No.	Lip Mat'l	Shaft Size	Hsg. Bore	Seal O.D.	Seal Width	Type/ Illus.
*30X45X6	S	30,00	44,80	45,00	6,00	32
		1.181	1.764	1.772	.236	
*30X45X7	S	30,00	44,80	45,00	7,00	32
		1.181	1.764	1.772	.276	
*30X45X10	S	30,00	44,80	45,00	10,00	32
		1.181	1.764	1.772	.394	
*30X45X13	S	30,00	44,80	45,00	13,00	32
		1.181	1.764	1.772	.512	
30X45X5	S	30,00	45,00	45,22	5,00	32
		1.181	1.772	1.780	.197	
30X45X8	S	30,00	45,00	45,20	8,00	32
		1.181	1.772	1.780	.315	
*30X45X8V	V	30,00	45,00	45,20	8,00	35
		1.181	1.772	1.780	.315	
*30X46X8	S	30,00	45,80	46,00	8,00	32
		1.181	1.803	1.811	.315	
30X46X7	S	30,00	46,00	46,20	7,00	32
		1.181	1.811	1.819	.276	
*30X47X5	S	30,00	46,80	47,00	5,00	32
		1.181	1.842	1.850	.197	
*30X47X6	S	30,00	46,80	47,00	6,00	32
		1.181	1.842	1.850	.236	
*30X47X8	S	30,00	46,80	47,00	8,00	32
		1.181	1.842	1.850	.315	
*30X47X10	S	30,00	46,80	47,00	10,00	32
		1.181	1.842	1.850	.394	
30X47X7	S	30,00	47,00	47,25	7,00	32
		1.181	1.850	1.860	.276	
*30X47X7V	V	30,00	47,00	47,20	7,00	32
		1.181	1.850	1.858	.276	
*30X48X7	S	30,00	47,80	48,00	7,00	32
		1.181	1.882	1.890	.276	
*30X48X10	S	30,00	47,80	48,00	10,00	32
		1.181	1.882	1.890	.394	
30X48X8	S	30,00	48,00	48,28	8,00	32
		1.181	1.890	1.901	.315	
*30X49X8	S	30,00	48,80	49,00	8,00	32
		1.181	1.921	1.929	.315	
*30X50X10	S	30,00	49,80	50,00	10,00	32
		1.181	1.961	1.969	.394	
*30X50X11	S	30,00	49,80	50,00	11,00	32
		1.181	1.961	1.969	.433	
*30X50X11	S	30,00	49,80	50,00	11,00	32
		1.181	1.961	1.969	.433	
*30X50X12	S	30,00	49,80	50,00	12,00	32
		1.181	1.961	1.969	.472	
30X50X7	S	30,00	50,00	50,23	7,00	32
		1.181	1.969	1.978	.276	
30X50X8	S	30,00	50,00	50,20	8,00	48
		1.181	1.969	1.976	.315	
*30X50X10V	V	30,00	50,00	50,20	10,00	35
		1.181	1.969	1.976	.394	
*30X51X10	S	30,00	50,75	51,00	10,00	32
		1.181	1.998	2.008	.394	
*30X52X8	S	30,00	51,75	52,00	8,00	32
		1.181	2.037	2.047	.315	
*30X52X10	S	30,00	51,75	52,00	10,00	32
		1.181	2.037	2.047	.394	
*30X52X11	S	30,00	51,75	52,00	11,00	32
		1.181	2.037	2.047	.433	
*30X52X12	S	30,00	51,75	52,00	12,00	32
		1.181	2.037	2.047	.472	
30X52X7	S	30,00	52,00	52,23	7,00	35
		1.181	2.047	2.056	.276	
*30X52X10V	V	30,00	52,00	52,20	10,00	32
		1.181	2.047	2.055	.394	
*30X54X9	S	30,00	53,75	54,00	9,00	32
		1.181	2.116	2.126	.354	
*30X55X8	S	30,00	54,75	55,00	8,00	32
		1.181	2.155	2.165	.315	

For Illustration and Material Data See Technical Section

* The U.S. customer service number is 877-4-TIMKEN. The Canadian customer service numbers are 800-565-4927 (English) and 800-565-0438 (French-Canadian).

METRIC SERIES (cont.)

Part No.	Lip Mat'l	Shaft Size	Hsg. Bore	Seal O.D.	Seal Width	Type/ Illus.
*30X55X11	S	30,00	54,75	55,00	11,00	32
		1.181	2.155	2.165	.433	
*30X55X12	S	30,00	54,75	55,00	12,00	32
		1.181	2.155	2.165	.472	
30X55X7	S	30,00	55,00	55,20	7,00	47
		1.181	2.165	2.173	.276	
30X55X10	S	30,00	55,00	55,28	10,00	35
		1.181	2.165	2.176	.394	
*30X55X10V	V	30,00	55,00	55,20	10,00	32
		1.181	2.165	2.173	.394	
*30X56X10	S	30,00	55,75	56,00	10,00	32
		1.181	2.195	2.205	.394	
*30X56X12	S	30,00	55,75	56,00	12,00	32
		1.181	2.195	2.205	.472	
30X56X8	S	30,00	56,00	56,20	8,00	35
		1.181	2.205	2.213	.315	
*30X57X10	S	30,00	56,75	57,00	10,00	32
		1.181	2.234	2.244	.394	
*30X58X10	S	30,00	57,75	58,00	10,00	32
		1.181	2.273	2.283	.394	
*30X58X8	S	30,00	58,00	58,20	8,00	32
		1.181	2.283	2.291	.315	
*30X60X7	S	30,00	59,75	60,00	7,00	32
		1.181	2.352	2.362	.276	
*30X60X10	S	30,00	59,75	60,00	10,00	32
		1.181	2.352	2.362	.394	
*30X60X8	S	30,00	60,00	60,20	8,00	32
		1.181	2.362	2.370	.315	
*30X62X5	S	30,00	61,75	62,00	5,00	32
		1.181	2.431	2.441	.197	
*30X62X8	S	30,00	61,75	62,00	8,00	32
		1.181	2.431	2.441	.315	
*30X62X9	S	30,00	61,75	62,00	9,00	32
		1.181	2.431	2.441	.354	
*30X62X10	S	30,00	61,75	62,00	10,00	32
		1.181	2.431	2.441	.394	
*30X62X11	S	30,00	61,75	62,00	11,00	32
		1.181	2.431	2.441	.433	
*30X62X12	S	30,00	61,75	62,00	12,00	32
		1.181	2.431	2.441	.472	
30X62X7	S	30,00	62,00	62,28	7,00	32
		1.181	2.441	2.452	.276	
*30X62X7V	V	30,00	62,00	62,20	7,00	35
		1.181	2.441	2.449	.276	
*30X65X10	S	30,00	64,75	65,00	10,00	32
		1.181	2.549	2.559	.394	
*30X65X8	S	30,00	65,00	65,20	8,00	32
		1.181	2.559	2.567	.315	
*30X68X10	S	30,00	67,75	68,00	10,00	32
		1.181	2.667	2.677	.394	
*30X68X8	S	30,00	68,00	68,20	8,00	32
		1.181	2.677	2.685	.315	
*30X70X8	S	30,00	70,00	70,20	8,00	32
		1.181	2.756	2.764	.315	
*30X72X8	S	30,00	71,75	72,00	8,00	32
		1.181	2.825	2.835	.315	
30X72X7	S	30,00	72,00	72,20	7,00	47
		1.181	2.835	2.843	.276	
*30X72X8V	V	30,00	72,00	72,20	8,00	32
		1.181	2.835	2.843	.315	
30X72X10	S	30,00	72,00	72,27	10,00	35
		1.181	2.835	2.845	.394	
*30X75X9	S	30,00	74,75	75,00	9,00	32
		1.181	2.943	2.953	.354	
*30X75X10	S	30,00	74,75	75,00	10,00	32
		1.181	2.943	2.953	.394	
*30X77X9	S	30,00	76,72	77,00	9,00	32
		1.181	3.020	3.031	.354	
*30X77X10	S	30,00	76,72	77,00	10,00	32
		1.181	3.020	3.031	.394	

METRIC SERIES (cont.)

Part No.	Lip Mat'l	Shaft Size	Hsg. Bore	Seal O.D.	Seal Width	Type/ Illus.
*30X80X10	S	30,00	79,72	80,00	10,00	32
		1.181	3.139	3.150	.394	
*30X44.5X7	S	30,00	44,30	44,50	7,00	32
		1.181	1.744	1.752	.276	
*30X48.5X8	S	30,00	48,30	48,50	8,00	32
		1.181	1.901	1.909	.315	
*30.5X52X8	S	30,50	51,75	52,00	8,00	32
		1.201	2.037	2.047	.315	
31X44X8	S	31,00	44,00	44,20	8,00	32
		1.220	1.732	1.740	.315	
*31X47X10	S	31,00	46,80	47,00	10,00	32
		1.220	1.842	1.850	.394	
*31X49X7	S	31,00	48,80	49,00	7,00	32
		1.220	1.921	1.929	.276	
*31X50X8	S	31,00	49,80	50,00	8,00	32
		1.220	1.961	1.969	.315	
*31X52X6	S	31,00	51,75	52,00	6,00	32
		1.220	2.037	2.047	.236	
*31X52X7	S	31,00	51,75	52,00	7,00	32
		1.220	2.037	2.047	.276	
*32X40X7	S	32,00	39,80	40,00	7,00	32
		1.260	1.567	1.575	.276	
*32X40X10	S	32,00	39,80	40,00	10,00	32
		1.260	1.567	1.575	.394	
*32X41X7	S	32,00	40,80	41,00	7,00	32
		1.260	1.606	1.614	.276	
*32X42X6	S	32,00	41,80	42,00	6,00	32
		1.260	1.646	1.654	.236	
32X42X7	S	32,00	42,00	42,20	7,00	35
		1.260	1.654	1.661	.276	
32X42X8	S	32,00	42,00	42,20	8,00	32
		1.260	1.654	1.661	.315	
32X43X7	S	32,00	43,00	43,20	7,00	32
		1.260	1.693	1.701	.276	
*32X44X5	S	32,00	43,80	44,00	5,00	32
		1.260	1.724	1.732	.197	
*32X44X6	S	32,00	43,80	44,00	6,00	32
		1.260	1.724	1.732	.236	
*32X44X7	S	32,00	43,80	44,00	7,00	32
		1.260	1.724	1.732	.276	
*32X44X8	S	32,00	43,80	44,00	8,00	32
		1.260	1.724	1.732	.315	
*32X44X8	S	32,00	43,80	44,00	8,00	32
		1.260	1.724	1.732	.315	
*32X44X9	S	32,00	43,80	44,00	9,00	32
		1.260	1.724	1.732	.354	
*32X44X10	S	32,00	43,80	44,00	10,00	32
		1.260	1.724	1.732	.394	
*32X45X6	S	32,00	44,80	45,00	6,00	32
		1.260	1.764	1.772	.236	
*32X45X8	S	32,00	44,80	45,00	8,00	32
		1.260	1.764	1.772	.315	
*32X45X10	S	32,00	44,80	45,00	10,00	32
		1.260	1.764	1.772	.394	
*32X45X6.5	S	32,00	44,80	45,00	6,50	32
		1.260	1.764	1.772	.256	
32X45X7	S	32,00	45,00	45,23	7,00	32
		1.260	1.772	1.781	.276	
*32X46X7	S	32,00	45,80	46,00	7,00	32
		1.260	1.803	1.811	.276	
*32X46X8	S	32,00	45,80	46,00	8,00	32
		1.260	1.803	1.811	.315	
32X46X6	S	32,00	46,00	46,23	6,00	32
		1.260	1.811	1.820	.236	
*32X47X6	S	32,00	46,80	47,00	6,00	32
		1.260	1.842	1.850	.236	
*32X47X8	S	32,00	46,80	47,00	8,00	32
		1.260	1.842	1.850	.315	
*32X47X10	S	32,00	46,80	47,00	10,00	32
		1.260	1.842	1.850	.394	

For Illustration and Material Data See Technical Section

* The U.S. customer service number is 877-4-TIMKEN. The Canadian customer service numbers are 800-565-4927 (English) and 800-565-0438 (French-Canadian).

METRIC SERIES (cont.)

Part No.	Lip Mat'l	Shaft Size	Hsg. Bore	Seal O.D.	Seal Width	Type/ Illus.
32X47X7	S	32,00	47,00	47,23	7,00	35
		1.260	1.850	1.859	.276	
*32X47X7V	V	32,00	47,00	47,20	7,00	32
		1.260	1.850	1.858	.276	
*32X48X7	S	32,00	47,80	48,00	7,00	32
		1.260	1.882	1.890	.276	
*32X48X10	S	32,00	47,80	48,00	10,00	32
		1.260	1.882	1.890	.394	
32X48X8	S	32,00	48,00	48,20	8,00	32
		1.260	1.890	1.898	.315	
*32X48X8V	V	32,00	48,00	48,20	8,00	35
		1.260	1.890	1.898	.315	
*32X50X7	S	32,00	49,80	50,00	7,00	32
		1.260	1.961	1.969	.276	
*32X50X10	S	32,00	49,80	50,00	10,00	32
		1.260	1.961	1.969	.394	
32X50X8	**S**	**32,00**	**50,00**	**50,23**	**8,00**	**35**
		1.260	**1.969**	**1.978**	**.315**	
*32X50X10V	V	32,00	50,00	50,20	10,00	35
		1.260	1.969	1.976	.394	
*32X52X8	S	32,00	51,75	52,00	8,00	32
		1.260	2.037	2.047	.315	
*32X52X10	S	32,00	51,75	52,00	10,00	32
		1.260	2.037	2.047	.394	
*32X52X11	S	32,00	51,75	52,00	11,00	32
		1.260	2.037	2.047	.433	
*32X52X12	S	32,00	51,75	52,00	12,00	32
		1.260	2.037	2.047	.472	
32X52X7	S	32,00	52,00	52,28	7,00	32
		1.260	2.047	2.058	.276	
*32X52X7V	V	32,00	52,00	52,20	7,00	35
		1.260	2.047	2.055	.276	
*32X53X7	S	32,00	52,75	53,00	7,00	32
		1.260	2.077	2.087	.276	
*32X54X8	S	32,00	53,75	54,00	8,00	32
		1.260	2.116	2.126	.315	
32X54X10	S	32,00	54,00	54,23	10,00	32
		1.260	2.126	2.135	.394	
*32X55X7	S	32,00	54,75	55,00	7,00	32
		1.260	2.155	2.165	.276	
*32X55X8	S	32,00	54,75	55,00	8,00	32
		1.260	2.155	2.165	.315	
*32X55X10	S	32,00	54,75	55,00	10,00	32
		1.260	2.155	2.165	.394	
*32X55X11	S	32,00	54,75	55,00	11,00	32
		1.260	2.155	2.165	.433	
*32X55X6.5	S	32,00	54,75	55,00	6,50	32
		1.260	2.155	2.165	.256	
*32X56X8	S	32,00	55,75	56,00	8,00	32
		1.260	2.195	2.205	.315	
32X56X10	S	32,00	56,00	56,28	10,00	32
		1.260	2.205	2.216	.394	
*32X58X10	S	32,00	57,75	58,00	10,00	32
		1.260	2.273	2.283	.394	
*32X58X12	S	32,00	57,75	58,00	12,00	32
		1.260	2.273	2.283	.472	
32X58X8	S	32,00	58,00	58,20	8,00	32
		1.260	2.283	2.291	.315	
32X60X8	S	32,00	60,00	60,20	8,00	32
		1.260	2.362	2.370	.315	
32X60X10	S	32,00	60,00	60,20	10,00	48
		1.260	2.362	2.370	.394	
*32X62X10	S	32,00	61,75	62,00	10,00	32
		1.260	2.431	2.441	.394	
*32X62X12	S	32,00	61,75	62,00	12,00	32
		1.260	2.431	2.441	.472	
32X62X8	S	32,00	62,00	62,20	8,00	32
		1.260	2.441	2.449	.315	
*32X65X8	S	32,00	64,75	65,00	8,00	32
		1.260	2.549	2.559	.315	

METRIC SERIES (cont.)

Part No.	Lip Mat'l	Shaft Size	Hsg. Bore	Seal O.D.	Seal Width	Type/ Illus.
*32X65X10	S	32,00	64,75	65,00	10,00	32
		1.260	2.549	2.559	.394	
*32X65X7.5	S	32,00	64,75	65,00	7,50	32
		1.260	2.549	2.559	.295	
*32X70X8	S	32,00	69,75	70,00	8,00	32
		1.260	2.746	2.756	.315	
*32X70X11	S	32,00	69,75	70,00	11,00	32
		1.260	2.746	2.756	.433	
*32X72X10	S	32,00	71,75	72,00	10,00	32
		1.260	2.825	2.835	.394	
32X72X8	S	32,00	72,00	72,20	8,00	32
		1.260	2.835	2.843	.315	
*32X44.5X8	S	32,00	44,30	44,50	8,00	32
		1.260	1.744	1.752	.315	
*32X44.5X10	S	32,00	44,30	44,50	10,00	32
		1.260	1.744	1.752	.394	
*33X44X7	S	33,00	43,80	44,00	7,00	32
		1.299	1.724	1.732	.276	
*33X44X8	S	33,00	43,80	44,00	8,00	32
		1.299	1.724	1.732	.315	
*33X45X8	S	33,00	44,80	45,00	8,00	32
		1.299	1.764	1.772	.315	
*33X45X10	S	33,00	44,80	45,00	10,00	32
		1.299	1.764	1.772	.394	
*33X46X7	S	33,00	45,80	46,00	7,00	32
		1.299	1.803	1.811	.276	
*33X47X8	S	33,00	46,80	47,00	8,00	32
		1.299	1.842	1.850	.315	
*33X48X6	S	33,00	47,80	48,00	6,00	32
		1.299	1.882	1.890	.236	
*33X48X8	S	33,00	47,80	48,00	8,00	32
		1.299	1.882	1.890	.315	
*33X50X6	S	33,00	49,80	50,00	6,00	32
		1.299	1.961	1.969	.236	
*33X50X7	S	33,00	49,80	50,00	7,00	32
		1.299	1.961	1.969	.276	
*33X50X10	S	33,00	49,80	50,00	10,00	32
		1.299	1.961	1.969	.394	
33X50X12	S	33,00	50,00	50,25	12,00	32
		1.299	1.969	1.978	.472	
*33X52X5	S	33,00	51,75	52,00	5,00	32
		1.299	2.037	2.047	.197	
*33X52X10	S	33,00	51,75	52,00	10,00	32
		1.299	2.037	2.047	.394	
33X52X6	S	33,00	52,00	52,25	6,00	32
		1.299	2.047	2.057	.236	
*33X55X10	S	33,00	54,75	55,00	10,00	32
		1.299	2.155	2.165	.394	
*33X56X10	S	33,00	55,75	56,00	10,00	32
		1.299	2.195	2.205	.394	
*33X56X12	S	33,00	55,75	56,00	12,00	32
		1.299	2.195	2.205	.472	
*33X62X7	S	33,00	61,75	62,00	7,00	32
		1.299	2.431	2.441	.276	
*33X72X10	S	33,00	71,75	72,00	10,00	32
		1.299	2.825	2.835	.394	
*33X47.3X7	S	33,00	47,10	47,30	7,00	32
		1.299	1.854	1.862	.276	
*34X42X5	S	34,00	41,80	42,00	5,00	32
		1.339	1.646	1.654	.197	
*34X44X7	S	34,00	43,80	44,00	7,00	32
		1.339	1.724	1.732	.276	
*34X44X8	S	34,00	43,80	44,00	8,00	32
		1.339	1.724	1.732	.315	
34X45X8	S	34,00	45,00	45,20	8,00	32
		1.339	1.772	1.780	.315	
*34X46X8	S	34,00	45,80	46,00	8,00	32
		1.339	1.803	1.811	.315	
*34X47X8	S	34,00	46,80	47,00	8,00	32
		1.339	1.842	1.850	.315	

For Illustration and Material Data See Technical Section

* The U.S. customer service number is 877-4-TIMKEN. The Canadian customer service numbers are 800-565-4927 (English) and 800-565-0438 (French-Canadian).

METRIC SERIES (cont.)

Part No.	Lip Mat'l	Shaft Size	Hsg. Bore	Seal O.D.	Seal Width	Type/ Illus.
*34X47X9	S	34,00	46,80	47,00	9,00	32
		1.339	1.842	1.850	.354	
*34X48X7	S	34,00	47,80	48,00	7,00	32
		1.339	1.882	1.890	.276	
*34X48X8	S	34,00	47,80	48,00	8,00	32
		1.339	1.882	1.890	.315	
*34X50X7	S	34,00	49,80	50,00	7,00	32
		1.339	1.961	1.969	.276	
*34X50X8	S	34,00	49,80	50,00	8,00	32
		1.339	1.961	1.969	.315	
*34X50X10	S	34,00	49,80	50,00	10,00	32
		1.339	1.961	1.969	.394	
*34X50X12	S	34,00	49,80	50,00	12,00	32
		1.339	1.961	1.969	.472	
*34X52X10	S	34,00	51,75	52,00	10,00	32
		1.339	2.037	2.047	.394	
*34X52X11	S	34,00	51,75	52,00	11,00	32
		1.339	2.037	2.047	.433	
34X52X8	S	34,00	52,00	52,28	8,00	32
		1.339	2.047	2.058	.315	
*34X53X8	S	34,00	52,75	53,00	8,00	32
		1.339	2.077	2.087	.315	
*34X54X8	S	34,00	53,75	54,00	8,00	32
		1.339	2.116	2.126	.315	
34X54X9	S	34,00	54,00	54,20	9,00	35
		1.339	2.126	2.134	.354	
*34X55X11	S	34,00	54,75	55,00	11,00	32
		1.339	2.155	2.165	.433	
34X55X9	S	34,00	55,00	55,20	9,00	32
		1.339	2.165	2.173	.354	
*34X56X8	S	34,00	56,00	56,20	8,00	32
		1.339	2.205	2.213	.315	
*34X58X10	S	34,00	57,75	58,00	10,00	32
		1.339	2.273	2.283	.394	
*34X58X8	S	34,00	58,00	58,20	8,00	32
		1.339	2.283	2.291	.315	
*34X60X8	S	34,00	60,00	60,20	8,00	32
		1.339	2.362	2.370	.315	
*34X62X7	S	34,00	61,75	62,00	7,00	32
		1.339	2.431	2.441	.276	
*34X62X14	S	34,00	61,75	62,00	14,00	32
		1.339	2.431	2.441	.551	
34X62X10	S	34,00	62,00	62,18	10,00	35
		1.339	2.441	2.448	.394	
*34X70X10	S	34,00	69,75	70,00	10,00	32
		1.339	2.746	2.756	.394	
*34X72X10	S	34,00	71,75	72,00	10,00	32
		1.339	2.825	2.835	.394	
*34X72X12	S	34,00	71,75	72,00	12,00	32
		1.339	2.825	2.835	.472	
*35X42X6	S	35,00	41,80	42,00	6,00	32
		1.378	1.646	1.654	.236	
*35X42X8	S	35,00	41,80	42,00	8,00	32
		1.378	1.646	1.654	.315	
*35X44X7	S	35,00	43,80	44,00	7,00	32
		1.378	1.724	1.732	.276	
*35X45X6	S	35,00	44,80	45,00	6,00	32
		1.378	1.764	1.772	.236	
*35X45X8	S	35,00	44,80	45,00	8,00	32
		1.378	1.764	1.772	.315	
*35X45X10	S	35,00	44,80	45,00	10,00	32
		1.378	1.764	1.772	.394	
*35X45X12	S	35,00	44,80	45,00	12,00	32
		1.378	1.764	1.772	.472	
35X45X7	S	35,00	45,00	45,15	7,00	35
		1.378	1.772	1.778	.276	
*35X46X10	S	35,00	45,80	46,00	10,00	32
		1.378	1.803	1.811	.394	
*35X47X8	S	35,00	46,80	47,00	8,00	32
		1.378	1.842	1.850	.315	

METRIC SERIES (cont.)

Part No.	Lip Mat'l	Shaft Size	Hsg. Bore	Seal O.D.	Seal Width	Type/ Illus.
*35X47X10	S	35,00	46,80	47,00	10,00	32
		1.378	1.842	1.850	.394	
35X47X7	S	35,00	47,00	47,23	7,00	35
		1.378	1.850	1.859	.276	
*35X47X7V	V	35,00	47,00	47,20	7,00	32
		1.378	1.850	1.858	.276	
*35X47X7.5	S	35,00	46,80	47,00	7,50	32
		1.378	1.842	1.850	.295	
*35X48X7	S	35,00	47,80	48,00	7,00	32
		1.378	1.882	1.890	.276	
*35X48X9	S	35,00	47,80	48,00	9,00	32
		1.378	1.882	1.890	.354	
*35X48X10	S	35,00	47,80	48,00	10,00	32
		1.378	1.882	1.890	.394	
35X48X8	S	35,00	48,00	48,20	8,00	32
		1.378	1.890	1.898	.315	
*35X49X6	S	35,00	48,80	49,00	6,00	32
		1.378	1.921	1.929	.236	
*35X49X8	S	35,00	48,80	49,00	8,00	32
		1.378	1.921	1.929	.315	
*35X50X9	S	35,00	49,80	50,00	9,00	32
		1.378	1.961	1.969	.354	
*35X50X10	S	35,00	49,80	50,00	10,00	32
		1.378	1.961	1.969	.394	
*35X50X11	S	35,00	49,80	50,00	11,00	32
		1.378	1.961	1.969	.433	
35X50X7	S	35,00	50,00	50,20	7,00	32
		1.378	1.969	1.976	.276	
35X50X8	S	35,00	50,00	50,24	8,00	35
		1.378	1.969	1.978	.315	
*35X50X8V	V	35,00	50,00	50,20	8,00	32
		1.378	1.969	1.976	.315	
*35X51X7	S	35,00	50,75	51,00	7,00	32
		1.378	1.998	2.008	.276	
*35X51X8	S	35,00	50,75	51,00	8,00	32
		1.378	1.998	2.008	.315	
*35X51X10	S	35,00	50,75	51,00	10,00	32
		1.378	1.998	2.008	.394	
*35X52X9	S	35,00	51,75	52,00	9,00	32
		1.378	2.037	2.047	.354	
*35X52X10	S	35,00	51,75	52,00	10,00	32
		1.378	2.037	2.047	.394	
*35X52X11	S	35,00	51,75	52,00	11,00	32
		1.378	2.037	2.047	.433	
*35X52X12	S	35,00	51,75	52,00	12,00	32
		1.378	2.037	2.047	.472	
35X52X7	S	35,00	52,00	52,20	7,00	32
		1.378	2.047	2.055	.276	
35X52X8	S	35,00	52,00	52,13	8,00	33
		1.378	2.047	2.052	.315	
*35X54X10	S	35,00	53,75	54,00	10,00	32
		1.378	2.116	2.126	.394	
35X54X8	S	35,00	54,00	54,20	8,00	35
		1.378	2.126	2.134	.315	
*35X54X10V	V	35,00	54,00	54,20	10,00	35
		1.378	2.126	2.134	.394	
*35X55X7	S	35,00	54,75	55,00	7,00	32
		1.378	2.155	2.165	.276	
*35X55X9	S	35,00	54,75	55,00	9,00	32
		1.378	2.155	2.165	.354	
*35X55X10	S	35,00	54,75	55,00	10,00	32
		1.378	2.155	2.165	.394	
*35X55X12	S	35,00	54,75	55,00	12,00	32
		1.378	2.155	2.165	.472	
35X55X8	S	35,00	55,00	55,10	8,00	47
		1.378	2.165	2.174	.315	
*35X55X10V	V	35,00	55,00	55,20	10,00	32
		1.378	2.165	2.173	.394	
35X55X11	S	35,00	55,00	55,23	11,00	32
		1.378	2.165	2.174	.433	

For Illustration and Material Data See Technical Section

* The U.S. customer service number is 877-4-TIMKEN. The Canadian customer service numbers are 800-565-4927 (English) and 800-565-0438 (French-Canadian).

METRIC SERIES (cont.)

Part No.	Lip Mat'l	Shaft Size	Hsg. Bore	Seal O.D.	Seal Width	Type/ Illus.
*35X56X12	S	*35,00*	*55,75*	*56,00*	*12,00*	32
		1.378	2.195	2.205	.472	
*35X56X5.8	S	*35,00*	*55,75*	*56,00*	*5,80*	32
		1.378	2.195	2.205	.228	
35X56X8	S	*35,00*	*56,00*	*56,20*	*8,00*	35
		1.378	2.205	2.213	.315	
35X56X10	S	*35,00*	*56,00*	*56,27*	*10,00*	32
		1.378	2.205	2.215	.394	
*35X56X10V	V	*35,00*	*56,00*	*56,20*	*10,00*	35
		1.378	2.205	2.213	.394	
*35X57X9	S	*35,00*	*56,75*	*57,00*	*9,00*	32
		1.378	2.234	2.244	.354	
*35X57X10	S	*35,00*	*56,75*	*57,00*	*10,00*	32
		1.378	2.234	2.244	.394	
*35X58X9	S	*35,00*	*57,75*	*58,00*	*9,00*	32
		1.378	2.273	2.283	.354	
*35X58X12	S	*35,00*	*57,75*	*58,00*	*12,00*	32
		1.378	2.273	2.283	.472	
*35X58X13	S	*35,00*	*57,75*	*58,00*	*13,00*	32
		1.378	2.273	2.283	.512	
*35X58X18	S	*35,00*	*57,75*	*58,00*	*18,00*	32
		1.378	2.273	2.283	.709	
35X58X10	S	*35,00*	*58,00*	*58,28*	*10,00*	35
		1.378	2.283	2.294	.394	
*35X59X12	S	*35,00*	*58,75*	*59,00*	*12,00*	32
		1.378	2.313	2.323	.472	
*35X60X8	S	*35,00*	*59,75*	*60,00*	*8,00*	32
		1.378	2.352	2.362	.315	
*35X60X11	S	*35,00*	*59,75*	*60,00*	*11,00*	32
		1.378	2.352	2.362	.433	
*35X60X12	S	*35,00*	*59,75*	*60,00*	*12,00*	32
		1.378	2.352	2.362	.472	
35X60X10	S	*35,00*	*60,00*	*60,23*	*10,00*	35
		1.378	2.362	2.371	.394	
*35X62X6	S	*35,00*	*61,75*	*62,00*	*6,00*	32
		1.378	2.431	2.441	.236	
*35X62X8	S	*35,00*	*61,75*	*62,00*	*8,00*	32
		1.378	2.431	2.441	.315	
*35X62X8	S	*35,00*	*61,75*	*62,00*	*8,00*	32
		1.378	2.431	2.441	.315	
*35X62X11	S	*35,00*	*61,75*	*62,00*	*11,00*	32
		1.378	2.431	2.441	.433	
*35X62X12	S	*35,00*	*61,75*	*62,00*	*12,00*	32
		1.378	2.431	2.441	.472	
35X62X7	S	*35,00*	*62,00*	*62,28*	*7,00*	32
		1.378	2.441	2.452	.276	
*35X62X7V	V	*35,00*	*62,00*	*62,20*	*7,00*	35
		1.378	2.441	2.449	.276	
*35X62X9.5	S	*35,00*	*61,75*	*62,00*	*9,50*	32
		1.378	2.431	2.441	.374	
35X62X10	S	*35,00*	*62,00*	*62,20*	*10,00*	35
		1.378	2.441	2.449	.394	
*35X64X12	S	*35,00*	*63,75*	*64,00*	*12,00*	32
		1.378	2.510	2.520	.472	
*35X64X13	S	*35,00*	*63,75*	*64,00*	*13,00*	32
		1.378	2.510	2.520	.512	
35X64X8	N	*35,00*	*64,00*	*64,13*	*8,00*	47
		1.378	2.520	2.525	.315	
*35X65X12	S	*35,00*	*64,75*	*65,00*	*12,00*	32
		1.378	2.549	2.559	.472	
35X65X8	S	*35,00*	*65,00*	*65,20*	*8,00*	32
		1.378	2.559	2.567	.315	
35X65X10	S	*35,00*	*65,00*	*65,20*	*10,00*	32
		1.378	2.559	2.567	.394	
*35X68X6	S	*35,00*	*67,75*	*68,00*	*6,00*	32
		1.378	2.667	2.677	.236	
*35X68X10	S	*35,00*	*68,00*	*68,23*	*10,00*	35
		1.378	2.677	2.686	.394	
*35X68X10V	V	*35,00*	*68,00*	*68,20*	*10,00*	35
		1.378	2.677	2.685	.394	

METRIC SERIES (cont.)

Part No.	Lip Mat'l	Shaft Size	Hsg. Bore	Seal O.D.	Seal Width	Type/ Illus.
*35X69X8	S	*35,00*	*69,00*	*69,20*	*8,00*	32
		1.378	2.717	2.724	.315	
*35X70X10	S	*35,00*	*69,75*	*70,00*	*10,00*	32
		1.378	2.746	2.756	.394	
35X70X8	S	*35,00*	*70,00*	*70,20*	*8,00*	32
		1.378	2.756	2.764	.315	
*35X72X7	S	*35,00*	*71,75*	*72,00*	*7,00*	32
		1.378	2.825	2.835	.276	
*35X72X11	S	*35,00*	*71,75*	*72,00*	*11,00*	32
		1.378	2.825	2.835	.433	
*35X72X12	S	*35,00*	*71,75*	*72,00*	*12,00*	32
		1.378	2.825	2.835	.472	
35X72X8	S	*35,00*	*72,00*	*72,20*	*8,00*	32
		1.378	2.835	2.843	.315	
35X72X10	S	*35,00*	*72,00*	*72,28*	*10,00*	35
		1.378	2.835	2.846	.394	
*35X72X10V	V	*35,00*	*72,00*	*72,20*	*10,00*	35
		1.378	2.835	2.843	.394	
*35X75X8	S	*35,00*	*74,75*	*75,00*	*8,00*	32
		1.378	2.943	2.953	.315	
*35X78X8	S	*35,00*	*78,00*	*78,20*	*8,00*	32
		1.378	3.071	3.079	.315	
*35X80X10	S	*35,00*	*79,72*	*80,00*	*10,00*	32
		1.378	3.139	3.150	.394	
*35X80X12	S	*35,00*	*79,72*	*80,00*	*12,00*	32
		1.378	3.139	3.150	.472	
*35X80X13	S	*35,00*	*79,72*	*80,00*	*13,00*	32
		1.378	3.139	3.150	.512	
35X80X8	S	*35,00*	*80,00*	*80,20*	*8,00*	32
		1.378	3.150	3.150	.315	
*35X82X7	S	*35,00*	*81,72*	*82,00*	*7,00*	32
		1.378	3.217	3.228	.276	
*35X46.5X8	S	*35,00*	*46,30*	*46,50*	*8,00*	32
		1.378	1.823	1.831	.315	
*35X49.5X10	S	*35,00*	*49,30*	*49,50*	*10,00*	32
		1.378	1.941	1.949	.394	
*36X44X5	S	*36,00*	*43,80*	*44,00*	*5,00*	32
		1.417	1.724	1.732	.197	
*36X46X6	S	*36,00*	*45,80*	*46,00*	*6,00*	32
		1.417	1.803	1.811	.236	
*36X46X9	S	*36,00*	*45,80*	*46,00*	*9,00*	32
		1.417	1.803	1.811	.354	
*36X47X8	S	*36,00*	*46,80*	*47,00*	*8,00*	32
		1.417	1.842	1.850	.315	
36X47X7	S	*36,00*	*47,00*	*47,20*	*7,00*	35
		1.417	1.850	1.858	.276	
*36X48X7	S	*36,00*	*47,80*	*48,00*	*7,00*	32
		1.417	1.882	1.890	.276	
*36X48X10	S	*36,00*	*47,80*	*48,00*	*10,00*	32
		1.417	1.882	1.890	.394	
*36X49X7	S	*36,00*	*48,80*	*49,00*	*7,00*	32
		1.417	1.921	1.929	.276	
*36X50X10	S	*36,00*	*49,80*	*50,00*	*10,00*	32
		1.417	1.961	1.969	.394	
36X50X7	S	*36,00*	*50,00*	*50,08*	*7,00*	47
		1.417	1.969	1.972	.276	
*36X51X7	S	*36,00*	*50,75*	*51,00*	*7,00*	32
		1.417	1.998	2.008	.276	
*36X52X8	S	*36,00*	*51,75*	*52,00*	*8,00*	32
		1.417	2.037	2.047	.315	
*36X52X10	S	*36,00*	*51,75*	*52,00*	*10,00*	32
		1.417	2.037	2.047	.394	
36X52X7	S	*36,00*	*52,00*	*52,20*	*7,00*	35
		1.417	2.047	2.055	.276	
*36X52X7V	V	*36,00*	*52,00*	*52,20*	*7,00*	32
		1.417	2.047	2.055	.276	
*36X54X7	S	*36,00*	*53,75*	*54,00*	*7,00*	32
		1.417	2.116	2.126	.276	
*36X54X10	S	*36,00*	*53,75*	*54,00*	*10,00*	32
		1.417	2.116	2.126	.394	

For Illustration and Material Data See Technical Section

* The U.S. customer service number is 877-4-TIMKEN. The Canadian customer service numbers are 800-565-4927 (English) and 800-565-0438 (French-Canadian).

METRIC SERIES (cont.)

Part No.	Lip Mat'l	Shaft Size	Hsg. Bore	Seal O.D.	Seal Width	Type/ Illus.
36X54X7.5	S	*36,00*	*54,00*	*54,20*	*7,50*	35
		1.417	2.126	2.134	.295	
36X54X8	S	*36,00*	*54,00*	*54,20*	*8,00*	35
		1.417	2.126	2.134	.315	
*36X54X8V	V	*36,00*	*54,00*	*54,20*	*7,50*	35
		1.417	2.126	2.134	.295	
*36X55X10	S	*36,00*	*54,75*	*55,00*	*10,00*	32
		1.417	2.155	2.165	.394	
*36X55X12	S	*36,00*	*54,75*	*55,00*	*12,00*	32
		1.417	2.155	2.165	.472	
*36X56X12	S	*36,00*	*55,75*	*56,00*	*12,00*	32
		1.417	2.195	2.205	.472	
36X56X10	S	*36,00*	*56,00*	*56,25*	*10,00*	35
		1.417	2.205	2.215	.394	
36X58X8	S	*36,00*	*58,00*	*58,25*	*8,00*	47
		1.417	2.283	2.293	.315	
36X58X12	S	*36,00*	*58,00*	*58,23*	*12,00*	35
		1.417	2.283	2.293	.472	
*36X60X6	S	*36,00*	*59,75*	*60,00*	*6,00*	32
		1.417	2.352	2.362	.236	
36X60X7	S	*36,00*	*60,00*	*60,20*	*7,00*	32
		1.417	2.362	2.370	.276	
*36X62X10	S	*36,00*	*61,75*	*62,00*	*10,00*	32
		1.417	2.431	2.441	.394	
36X62X7	S	*36,00*	*62,00*	*62,28*	*7,00*	32
		1.417	2.441	2.452	.276	
36X68X10	S	*36,00*	*68,00*	*68,28*	*10,00*	35
		1.417	2.677	2.688	.394	
*36X70X8	S	*36,00*	*70,00*	*70,20*	*8,00*	32
		1.417	2.756	2.764	.315	
*36X72X8	S	*36,00*	*72,00*	*72,20*	*8,00*	32
		1.417	2.835	2.843	.315	
*36X63.5X13	S	*36,00*	*63,25*	*63,50*	*13,00*	32
		1.417	2.490	2.500	.512	
*36.5X62X7	S	*36,50*	*61,75*	*62,00*	*7,00*	32
		1.437	2.431	2.441	.276	
*37X47X10	S	*37,00*	*46,80*	*47,00*	*10,00*	32
		1.457	1.842	1.850	.394	
37X52X8	S	*37,00*	*52,00*	*52,28*	*8,00*	35
		1.457	2.047	2.058	.315	
*37X53X7	S	*37,00*	*52,75*	*53,00*	*7,00*	32
		1.457	2.077	2.087	.276	
*37X55X8	S	*37,00*	*54,75*	*55,00*	*8,00*	32
		1.457	2.155	2.165	.315	
*37X57X10	S	*37,00*	*56,75*	*57,00*	*10,00*	32
		1.457	2.234	2.244	.394	
*37X58X7	S	*37,00*	*57,75*	*58,00*	*7,00*	32
		1.457	2.273	2.283	.276	
*37X58X10	S	*37,00*	*57,75*	*58,00*	*10,00*	32
		1.457	2.273	2.283	.394	
*37X58X13	S	*37,00*	*57,75*	*58,00*	*13,00*	32
		1.457	2.273	2.283	.512	
*37X64X13	S	*37,00*	*63,75*	*64,00*	*13,00*	32
		1.457	2.510	2.520	.512	
*38X47X7	S	*38,00*	*46,80*	*47,00*	*7,00*	32
		1.496	1.842	1.850	.276	
*38X47X8	S	*38,00*	*47,00*	*47,25*	*8,00*	25
		1.496	1.850	1.860	.315	
*38X48X6	S	*38,00*	*47,80*	*48,00*	*6,00*	32
		1.496	1.882	1.890	.236	
*38X48X7	S	*38,00*	*47,80*	*48,00*	*7,00*	32
		1.496	1.882	1.890	.276	
*38X48X10	S	*38,00*	*47,80*	*48,00*	*10,00*	32
		1.496	1.882	1.890	.394	
*38X50X8	S	*38,00*	*49,80*	*50,00*	*8,00*	32
		1.496	1.961	1.969	.315	
*38X50X10	S	*38,00*	*49,80*	*50,00*	*10,00*	32
		1.496	1.961	1.969	.394	
38X50X7	S	*38,00*	*50,00*	*50,25*	*7,00*	35
		1.496	1.969	1.978	.276	

METRIC SERIES (cont.)

Part No.	Lip Mat'l	Shaft Size	Hsg. Bore	Seal O.D.	Seal Width	Type/ Illus.
*38X50X7V	V	*38,00*	*50,00*	*50,20*	*7,00*	35
		1.496	1.969	1.976	.276	
*38X51X7	S	*38,00*	*50,75*	*51,00*	*7,00*	32
		1.496	1.998	2.008	.276	
*38X52X6	S	*38,00*	*51,75*	*52,00*	*6,00*	32
		1.496	2.037	2.047	.236	
*38X52X8	S	*38,00*	*51,75*	*52,00*	*8,00*	32
		1.496	2.037	2.047	.315	
*38X52X9	S	*38,00*	*51,75*	*52,00*	*9,00*	32
		1.496	2.037	2.047	.354	
*38X52X10	S	*38,00*	*51,75*	*52,00*	*10,00*	32
		1.496	2.037	2.047	.394	
38X52X7	**S**	***38,00***	***52,00***	***52,20***	***7,00***	**32**
		1.496	**2.047**	**2.055**	**.276**	
*38X52X7V	V	*38,00*	*52,00*	*52,20*	*7,00*	35
		1.496	2.047	2.055	.276	
38X52X8.5	S	*38,00*	*52,00*	*52,25*	*8,50*	32
		1.496	2.047	2.057	.335	
38X52X8.5	S	*38,00*	*52,00*	*52,25*	*8,50*	32
		1.496	2.047	2.057	.335	
38X53X8	S	*38,00*	*53,00*	*53,20*	*8,00*	32
		1.496	2.087	2.094	.315	
38X54X7	S	*38,00*	*54,00*	*54,18*	*7,00*	48
		1.496	2.126	2.133	.276	
38X54X10	S	*38,00*	*54,00*	*54,18*	*10,00*	32
		1.496	2.126	2.133	.394	
*38X54X10V	V	*38,00*	*54,00*	*54,20*	*10,00*	35
		1.496	2.126	2.134	.394	
*38X55X6	S	*38,00*	*54,75*	*55,00*	*6,00*	32
		1.496	2.155	2.165	.236	
*38X55X8	S	*38,00*	*54,75*	*55,00*	*8,00*	32
		1.496	2.155	2.165	.315	
*38X55X9	S	*38,00*	*54,75*	*55,00*	*9,00*	32
		1.496	2.155	2.165	.354	
*38X55X10	S	*38,00*	*54,75*	*55,00*	*10,00*	32
		1.496	2.155	2.165	.394	
38X55X7	N	*38,00*	*55,00*	*55,23*	*7,00*	32
		1.496	2.165	2.174	.276	
*38X56X7	S	*38,00*	*55,75*	*56,00*	*7,00*	32
		1.496	2.195	2.205	.276	
*38X56X12	S	*38,00*	*55,75*	*56,00*	*12,00*	32
		1.496	2.195	2.205	.472	
38X56X10	S	*38,00*	*56,00*	*56,28*	*10,00*	32
		1.496	2.205	2.216	.394	
*38X56X10V	V	*38,00*	*56,00*	*56,20*	*10,00*	35
		1.496	2.205	2.213	.394	
*38X57X10	S	*38,00*	*56,75*	*57,00*	*10,00*	32
		1.496	2.234	2.244	.394	
*38X58X7	S	*38,00*	*57,75*	*58,00*	*7,00*	32
		1.496	2.273	2.283	.276	
*38X58X10	S	*38,00*	*57,75*	*58,00*	*10,00*	32
		1.496	2.273	2.283	.394	
*38X58X11	S	*38,00*	*57,75*	*58,00*	*11,00*	32
		1.496	2.273	2.283	.433	
38X58X8	S	*38,00*	*58,00*	*58,11*	*8,00*	47
		1.496	2.283	2.288	.315	
*38X60X9	S	*38,00*	*59,75*	*60,00*	*9,00*	32
		1.496	2.352	2.362	.354	
38X60X8	S	*38,00*	*60,00*	*60,20*	*8,00*	32
		1.496	2.362	2.370	.315	
38X60X10	S	*38,00*	*60,00*	*60,35*	*10,00*	32
		1.496	2.362	2.376	.394	
*38X60X10V	V	*38,00*	*60,00*	*60,20*	*10,00*	35
		1.496	2.362	2.370	.394	
*38X62X9	S	*38,00*	*61,75*	*62,00*	*9,00*	32
		1.496	2.431	2.441	.354	
*38X62X10	S	*38,00*	*61,75*	*62,00*	*10,00*	32
		1.496	2.431	2.441	.394	
*38X62X12	S	*38,00*	*61,75*	*62,00*	*12,00*	32
		1.496	2.431	2.441	.472	

For Illustration and Material Data See Technical Section

* The U.S. customer service number is 877-4-TIMKEN. The Canadian customer service numbers are 800-565-4927 (English) and 800-565-0438 (French-Canadian).

METRIC SERIES (cont.)

Part No.	Lip Mat'l	Shaft Size	Hsg. Bore	Seal O.D.	Seal Width	Type/ Illus.
38X62X7	S	38,00	62,00	62,28	7,00	32
		1.496	2.441	2.452	.276	
*38X62X7V	V	38,00	62,00	62,20	7,00	32
		1.496	2.441	2.449	.276	
*38X65X10	S	38,00	64,75	65,00	10,00	32
		1.496	2.549	2.559	.394	
*38X65X11	S	38,00	64,75	65,00	11,00	32
		1.496	2.549	2.559	.433	
*38X65X13	S	38,00	64,75	65,00	13,00	32
		1.496	2.549	2.559	.512	
38X65X8	S	38,00	65,00	65,20	8,00	32
		1.496	2.559	2.567	.315	
38X68X8	S	38,00	68,00	68,20	8,00	32
		1.496	2.677	2.685	.315	
38X68X10	S	38,00	68,00	68,20	10,00	32
		1.496	2.677	2.685	.394	
38X70X10	S	38,00	70,00	70,20	10,00	35
		1.496	2.756	2.764	.394	
*38X72X12	S	38,00	71,75	72,00	12,00	32
		1.496	2.825	2.835	.472	
38X72X10	S	38,00	72,00	72,20	10,00	35
		1.496	2.835	2.843	.394	
38X74X8	S	38,00	74,00	74,20	8,00	32
		1.496	2.913	2.921	.315	
38X74X11	N	38,00	74,00	74,20	11,00	32
		1.496	2.913	2.921	.433	
*38X75X8	S	38,00	75,00	75,20	8,00	32
		1.496	2.953	2.961	.315	
*38X78X8	S	38,00	78,00	78,20	8,00	32
		1.496	3.071	3.079	.315	
*38X80X10	S	38,00	79,72	80,00	10,00	32
		1.496	3.139	3.150	.394	
*38X80X8	S	38,00	80,00	80,20	8,00	32
		1.496	3.150	3.157	.315	
*38X90X8	S	38,00	90,00	90,20	8,00	32
		1.496	3.543	3.551	.315	
*38X52.6X6	S	38,00	52,35	52,60	6,00	32
		1.496	2.061	2.071	.236	
*38X60.5X12	S	38,00	60,25	60,50	12,00	32
		1.496	2.372	2.382	.472	
*38X63.5X10	S	38,00	63,25	63,50	10,00	32
		1.496	2.490	2.500	.394	
*39X51X7.5	S	39,00	50,75	51,00	7,50	32
		1.535	1.998	2.008	.295	
*39X55X9	S	39,00	54,75	55,00	9,00	32
		1.535	2.155	2.165	.354	
*39X56X7	S	39,00	55,75	56,00	7,00	32
		1.535	2.195	2.205	.276	
*39X59X8	S	39,00	58,75	59,00	8,00	32
		1.535	2.313	2.323	.315	
*39X65X8	S	39,00	64,75	65,00	8,00	32
		1.535	2.549	2.559	.315	
*39.6X52X11	S	39,60	51,75	52,00	11,00	32
		1.559	2.037	2.047	.433	
*40X50X5	S	40,00	49,80	50,00	5,00	32
		1.575	1.961	1.969	.197	
*40X50X7	S	40,00	49,80	50,00	7,00	32
		1.575	1.961	1.969	.276	
*40X50X10	S	40,00	49,80	50,00	10,00	32
		1.575	1.961	1.969	.394	
*40X50X6.5	S	40,00	49,80	50,00	6,50	32
		1.575	1.961	1.969	.256	
40X50X8	S	40,00	50,00	50,20	8,00	35
		1.575	1.969	1.976	.315	
*40X52X6	S	40,00	51,75	52,00	6,00	32
		1.575	2.037	2.047	.236	
*40X52X8	S	40,00	51,75	52,00	8,00	32
		1.575	2.037	2.047	.315	
*40X52X9	S	40,00	51,75	52,00	9,00	32
		1.575	2.037	2.047	.354	

METRIC SERIES (cont.)

Part No.	Lip Mat'l	Shaft Size	Hsg. Bore	Seal O.D.	Seal Width	Type/ Illus.
*40X52X10	S	40,00	51,75	52,00	10,00	32
		1.575	2.037	2.047	.394	
40X52X7	S	40,00	52,00	52,25	7,00	32
		1.575	2.047	2.057	.276	
*40X52X7V	V	40,00	52,00	52,20	7,00	32
		1.575	2.047	2.055	.276	
*40X53X8	S	40,00	52,75	53,00	8,00	32
		1.575	2.077	2.087	.315	
*40X54X7	S	40,00	53,75	54,00	7,00	32
		1.575	2.116	2.126	.276	
*40X54X8	S	40,00	53,75	54,00	8,00	32
		1.575	2.116	2.126	.315	
*40X54X10	S	40,00	53,75	54,00	10,00	32
		1.575	2.116	2.126	.394	
40X54X6	S	40,00	54,00	54,20	5,50	47
		1.575	2.126	2.134	.217	
*40X55X7	S	40,00	54,75	55,00	7,00	32
		1.575	2.155	2.165	.276	
*40X55X10	S	40,00	54,75	55,00	10,00	32
		1.575	2.155	2.165	.394	
40X55X6	S	40,00	55,00	55,20	6,50	35
		1.575	2.165	2.173	.256	
40X55X8	S	40,00	55,00	55,28	8,00	32
		1.575	2.165	2.176	.315	
*40X55X8V	V	40,00	55,00	55,20	8,00	32
		1.575	2.165	2.173	.315	
*40X56X8	S	40,00	55,75	56,00	8,00	32
		1.575	2.195	2.205	.315	
*40X56X8	S	40,00	55,75	56,00	8,00	32
		1.575	2.195	2.205	.315	
*40X56X8	S	40,00	55,75	56,00	8,00	32
		1.575	2.195	2.205	.315	
40X56X7	S	40,00	56,00	56,20	7,00	32
		1.575	2.205	2.213	.276	
*40X56X8V	V	40,00	56,00	56,20	8,00	35
		1.575	2.205	2.213	.315	
40X56X10	S	40,00	56,00	56,20	10,00	35
		1.575	2.205	2.213	.394	
*40X57X7	S	40,00	56,75	57,00	7,00	32
		1.575	2.234	2.244	.276	
40X57X10	S	40,00	57,00	57,20	10,00	32
		1.575	2.244	2.252	.394	
*40X58X6.5	S	40,00	57,75	58,00	6,50	32
		1.575	2.273	2.283	.256	
40X58X8	S	40,00	58,00	58,20	8,00	32
		1.575	2.283	2.291	.315	
40X58X10	S	40,00	58,00	58,28	10,00	32
		1.575	2.283	2.294	.394	
*40X58X10V	V	40,00	58,00	58,20	10,00	35
		1.575	2.283	2.291	.394	
*40X59X10	S	40,00	58,75	59,00	10,00	32
		1.575	2.313	2.323	.394	
*40X60X7	S	40,00	59,75	60,00	7,00	32
		1.575	2.352	2.362	.276	
*40X60X12	S	40,00	59,75	60,00	12,00	32
		1.575	2.352	2.362	.472	
40X60X10	S	40,00	60,00	60,20	10,00	32
		1.575	2.362	2.370	.394	
*40X60X10V	V	40,00	60,00	60,20	10,00	35
		1.575	2.362	2.370	.394	
*40X62X9	S	40,00	61,75	62,00	9,00	32
		1.575	2.431	2.441	.354	
*40X62X10	S	40,00	61,75	62,00	10,00	32
		1.575	2.431	2.441	.394	
*40X62X11	S	40,00	61,75	62,00	11,00	32
		1.575	2.431	2.441	.433	
40X62X7	S	40,00	62,00	62,20	7,00	35
		1.575	2.441	2.449	.276	
*40X62X7V	V	40,00	62,00	62,20	7,00	32
		1.575	2.441	2.449	.276	

For Illustration and Material Data See Technical Section

* The U.S. customer service number is 877-4-TIMKEN. The Canadian customer service numbers are 800-565-4927 (English) and 800-565-0438 (French-Canadian).

METRIC SERIES (cont.)

Part No.	Lip Mat'l	Shaft Size	Hsg. Bore	Seal O.D.	Seal Width	Type/ Illus.
40X62X8	S	40,00	62,00	62,25	8,00	32
		1.575	2.441	2.451	.315	
*40X62X11.5	S	40,00	61,75	62,00	11,50	32
		1.575	2.431	2.441	.453	
40X62X12	S	40,00	62,00	62,25	11,50	35
		1.575	2.441	2.451	.453	
*40X63X7	S	40,00	62,75	63,00	7,00	32
		1.575	2.470	2.480	.276	
*40X64X10	S	40,00	63,75	64,00	10,00	32
		1.575	2.510	2.520	.394	
*40X64X12	S	40,00	63,75	64,00	12,00	32
		1.575	2.510	2.520	.472	
*40X65X8	S	40,00	64,75	65,00	8,00	32
		1.575	2.549	2.559	.315	
*40X65X12	S	40,00	64,75	65,00	12,00	32
		1.575	2.549	2.559	.472	
40X65X10	S	40,00	65,00	65,28	10,00	32
		1.575	2.559	2.570	.394	
*40X68X7	S	40,00	67,75	68,00	7,00	32
		1.575	2.667	2.677	.276	
*40X68X10	S	40,00	67,75	68,00	10,00	32
		1.575	2.667	2.677	.394	
40X68X8	S	40,00	68,00	68,80	8,00	35
		1.575	2.677	2.709	.315	
40X68X12	S	40,00	68,00	68,25	12,00	35
		1.575	2.677	2.687	.472	
*40X70X10	S	40,00	69,75	70,00	10,00	32
		1.575	2.746	2.756	.394	
*40X70X12	S	40,00	69,75	70,00	12,00	32
		1.575	2.746	2.756	.472	
40X70X8	S	40,00	70,00	70,20	8,00	32
		1.575	2.756	2.764	.315	
*40X72X10	S	40,00	71,75	72,00	10,00	32
		1.575	2.825	2.835	.394	
*40X72X12	S	40,00	71,75	72,00	12,00	32
		1.575	2.825	2.835	.472	
40X72X7	S	40,00	72,00	72,35	7,00	35
		1.575	2.835	2.848	.276	
*40X74X10	S	40,00	73,75	74,00	10,00	32
		1.575	2.903	2.913	.394	
*40X74X8	S	40,00	74,00	74,20	8,00	32
		1.575	2.913	2.921	.315	
*40X75X10	S	40,00	74,75	75,00	10,00	32
		1.575	2.943	2.953	.394	
*40X75X13	S	40,00	74,75	75,00	13,00	32
		1.575	2.943	2.953	.512	
40X75X8	S	40,00	75,00	75,20	8,00	32
		1.575	2.953	2.961	.315	
*40X76X8	S	40,00	75,75	76,00	8,00	32
		1.575	2.982	2.992	.315	
40X78X8	S	40,00	78,00	78,80	8,00	32
		1.575	3.071	3.102	.315	
40X78X10	S	40,00	78,00	78,20	10,00	35
		1.575	3.071	3.079	.394	
*40X80X7	S	40,00	79,72	80,00	7,00	32
		1.575	3.139	3.150	.276	
*40X80X12	S	40,00	79,72	80,00	12,00	32
		1.575	3.139	3.150	.472	
40X80X10	S	40,00	80,00	80,28	10,00	35
		1.575	3.150	3.161	.394	
*40X80X10V	V	40,00	80,00	80,20	10,00	32
		1.575	3.150	3.157	.394	
*40X82X8	S	40,00	82,00	82,20	8,00	32
		1.575	3.228	3.236	.315	
*40X85X8	S	40,00	85,00	85,20	8,00	32
		1.575	3.346	3.354	.315	
*40X88X8	S	40,00	88,00	88,20	8,00	32
		1.575	3.465	3.472	.315	
*40X90X10	S	40,00	89,72	90,00	10,00	32
		1.575	3.532	3.543	.394	

METRIC SERIES (cont.)

Part No.	Lip Mat'l	Shaft Size	Hsg. Bore	Seal O.D.	Seal Width	Type/ Illus.
*40X90X12	S	40,00	89,72	90,00	12,00	32
		1.575	3.532	3.543	.472	
40X90X8	S	40,00	90,00	90,20	8,00	35
		1.575	3.543	3.551	.315	
*40X62.5X11	S	40,00	62,25	62,50	11,00	32
		1.575	2.451	2.461	.433	
*40X63.5X10	S	40,00	63,25	63,50	10,00	32
		1.575	2.490	2.500	.394	
*40X80.5X10	S	40,00	80,22	80,50	10,00	32
		1.575	3.158	3.169	.394	
*40X57.15X10	S	40,00	56,90	57,15	10,00	32
		1.575	2.240	2.250	.394	
*41X51X5	S	41,00	50,75	51,00	5,00	32
		1.614	1.998	2.008	.197	
*41X53X7	S	41,00	52,75	53,00	7,00	32
		1.614	2.077	2.087	.276	
*41X54X7	S	41,00	53,75	54,00	7,00	32
		1.614	2.116	2.126	.276	
41X55X7	S	41,00	55,00	55,29	7,00	32
		1.614	2.165	2.177	.276	
41X56X7	S	41,00	56,00	56,25	7,00	32
		1.614	2.205	2.215	.276	
*41X62X8	S	41,00	62,00	62,20	8,00	32
		1.614	2.441	2.449	.315	
*41X64X10	S	41,00	63,75	64,00	10,00	32
		1.614	2.510	2.520	.394	
*41X55.7X9	S	41,00	55,45	55,70	9,00	32
		1.614	2.183	2.193	.354	
*41.7X55X7	S	41,70	54,75	55,00	7,00	32
		1.642	2.155	2.165	.276	
*41.7X55X10	S	41,70	54,75	55,00	10,00	32
		1.642	2.155	2.165	.394	
*42X50X6	S	42,00	49,80	50,00	6,00	32
		1.654	1.961	1.969	.236	
*42X50X7	S	42,00	49,80	50,00	7,00	32
		1.654	1.961	1.969	.276	
*42X52X4	S	42,00	51,75	52,00	4,00	32
		1.654	2.037	2.047	.157	
*42X52X6	S	42,00	51,75	52,00	6,00	32
		1.654	2.037	2.047	.236	
*42X52X7	S	42,00	51,75	52,00	7,00	32
		1.654	2.037	2.047	.276	
*42X54X7	S	42,00	53,75	54,00	7,00	32
		1.654	2.116	2.126	.276	
*42X55X9	S	42,00	54,75	55,00	9,00	32
		1.654	2.155	2.165	.354	
42X55X7	S	42,00	55,00	55,20	7,00	32
		1.654	2.165	2.173	.276	
42X55X8	S	42,00	55,00	55,28	8,00	35
		1.654	2.165	2.176	.315	
*42X55X8V	V	42,00	55,00	55,20	8,00	35
		1.654	2.165	2.173	.315	
*42X56X6	S	42,00	55,75	56,00	6,00	32
		1.654	2.195	2.205	.236	
*42X56X10	S	42,00	55,75	56,00	10,00	32
		1.654	2.195	2.205	.394	
42X56X7	S	42,00	56,00	56,13	7,00	32
		1.654	2.205	2.210	.276	
*42X56X7V	V	42,00	56,00	56,20	7,00	35
		1.654	2.205	2.213	.276	
*42X58X8	S	42,00	57,75	58,00	8,00	32
		1.654	2.273	2.283	.315	
*42X58X10	S	42,00	57,75	58,00	10,00	32
		1.654	2.273	2.283	.394	
42X58X7	S	42,00	58,00	58,10	7,00	48
		1.654	2.283	2.287	.276	
*42X60X8	S	42,00	59,75	60,00	8,00	32
		1.654	2.352	2.362	.315	
*42X60X9	S	42,00	59,75	60,00	9,00	32
		1.654	2.352	2.362	.354	

For Illustration and Material Data See Technical Section

* The U.S. customer service number is 877-4-TIMKEN. The Canadian customer service numbers are 800-565-4927 (English) and 800-565-0438 (French-Canadian).

METRIC SERIES (cont.)

Part No.	Lip Mat'l	Shaft Size	Hsg. Bore	Seal O.D.	Seal Width	Type/ Illus.
*42X60X10	S	42,00	59,75	60,00	10,00	32
		1.654	2.352	2.362	.394	
*42X60X12	S	42,00	59,75	60,00	12,00	32
		1.654	2.352	2.362	.472	
42X60X7	S	42,00	60,00	60,22	7,00	32
		1.654	2.362	2.371	.276	
*42X60X10V	V	42,00	60,00	60,20	10,00	35
		1.654	2.362	2.370	.394	
*42X62X7	S	42,00	61,75	62,00	7,00	32
		1.654	2.431	2.441	.276	
*42X62X10	S	42,00	61,75	62,00	10,00	32
		1.654	2.431	2.441	.394	
*42X62X12	S	42,00	61,75	62,00	12,00	32
		1.654	2.431	2.441	.472	
42X62X8	S	42,00	62,00	62,27	8,00	35
		1.654	2.441	2.452	.315	
*42X62X8V	V	42,00	62,00	62,20	8,00	32
		1.654	2.441	2.449	.315	
*42X63X7	S	42,00	62,75	63,00	7,00	32
		1.654	2.470	2.480	.276	
*42X64X8	S	42,00	63,75	64,00	8,00	32
		1.654	2.510	2.520	.315	
*42X65X9	S	42,00	64,75	65,00	9,00	32
		1.654	2.549	2.559	.354	
*42X65X12	S	42,00	64,75	65,00	12,00	32
		1.654	2.549	2.559	.472	
*42X65X7.5	S	42,00	64,75	65,00	7,50	32
		1.654	2.549	2.559	.295	
42X65X10	N	42,00	65,00	65,15	10,00	47
		1.654	2.559	2.565	.394	
*42X65X10V	V	42,00	65,00	65,20	10,00	35
		1.654	2.559	2.567	.394	
42X68X8	S	42,00	68,00	68,20	8,00	32
		1.654	2.677	2.685	.315	
42X68X10	S	42,00	68,00	68,20	10,00	32
		1.654	2.677	2.685	.394	
*42X70X8	S	42,00	69,75	70,00	8,00	32
		1.654	2.746	2.756	.315	
*42X70X12	S	42,00	69,75	70,00	12,00	32
		1.654	2.746	2.756	.472	
42X70X10	S	42,00	70,00	70,20	10,00	32
		1.654	2.756	2.764	.394	
42X72X8	**S**	**42,00**	**72,00**	**72,20**	**8,00**	**32**
		1.654	**2.835**	**2.843**	**.315**	
42X72X10	S	42,00	72,00	72,27	10,00	32
		1.654	2.835	2.845	.394	
*42X72X10V	V	42,00	72,00	72,20	10,00	35
		1.654	2.835	2.843	.394	
*42X75X10	S	42,00	74,75	75,00	10,00	32
		1.654	2.943	2.953	.394	
*42X75X12	S	42,00	74,75	75,00	12,00	32
		1.654	2.943	2.953	.472	
*42X75X8	S	42,00	75,00	75,20	8,00	32
		1.654	2.953	2.961	.315	
*42X76X12	S	42,00	75,75	76,00	12,00	32
		1.654	2.982	2.992	.472	
*42X78X10	S	42,00	77,72	78,00	10,00	32
		1.654	3.060	3.071	.394	
*42X78X8	S	42,00	78,00	78,20	8,00	32
		1.654	3.071	3.079	.315	
42X80X8	S	42,00	80,00	80,20	8,00	32
		1.654	3.150	3.157	.315	
42X80X10	S	42,00	80,00	80,20	10,00	35
		1.654	3.150	3.157	.394	
*42.9X62X8	S	42,90	61,75	62,00	8,00	32
		1.689	2.431	2.441	.315	
*43X50X7	S	43,00	49,80	50,00	7,00	32
		1.693	1.961	1.969	.276	
*43X55X9	S	43,00	54,75	55,00	9,00	32
		1.693	2.155	2.165	.354	

METRIC SERIES (cont.)

Part No.	Lip Mat'l	Shaft Size	Hsg. Bore	Seal O.D.	Seal Width	Type/ Illus.
43X55X8	S	43,00	55,00	55,20	8,00	32
		1.693	2.165	2.173	.315	
*43X57X8	S	43,00	57,00	57,20	8,00	32
		1.693	2.244	2.252	.315	
*43X58X8	S	43,00	57,75	58,00	8,00	32
		1.693	2.273	2.283	.315	
*43X62X8	S	43,00	61,75	62,00	8,00	32
		1.693	2.431	2.441	.315	
*43X62X12	S	43,00	61,75	62,00	12,00	32
		1.693	2.431	2.441	.472	
43X65X8	S	43,00	65,00	65,20	8,00	32
		1.693	2.559	2.567	.315	
*43X66X10	S	43,00	65,75	66,00	10,00	32
		1.693	2.588	2.598	.394	
*43X69X8	S	43,00	69,00	69,20	8,00	32
		1.693	2.717	2.724	.315	
*43X73X8	S	43,00	73,00	73,20	8,00	32
		1.693	2.874	2.882	.315	
*43.5X62X6.5	S	43,50	61,75	62,00	6,50	32
		1.713	2.431	2.441	.256	
*44X54X7	S	44,00	53,75	54,00	7,00	32
		1.732	2.116	2.126	.276	
*44X58X8	S	44,00	58,00	58,20	8,00	32
		1.732	2.283	2.291	.315	
*44X60X9	S	44,00	59,75	60,00	9,00	32
		1.732	2.352	2.362	.354	
44X60X7	S	44,00	60,00	60,20	7,00	32
		1.732	2.362	2.370	.276	
44X60X10	S	44,00	60,00	60,20	10,00	35
		1.732	2.362	2.370	.394	
*44X62X7	S	44,00	61,75	62,00	7,00	32
		1.732	2.431	2.441	.276	
*44X62X10	S	44,00	61,75	62,00	10,00	32
		1.732	2.431	2.441	.394	
44X62X8⬅➡	S	44,00	62,00	62,26	8,00	32
		1.732	2.441	2.451	.315	
*44X65X11	S	44,00	64,75	65,00	11,00	32
		1.732	2.549	2.559	.433	
44X65X10	S	44,00	65,00	65,28	10,00	35
		1.732	2.559	2.570	.394	
*44X70X12	S	44,00	69,75	70,00	12,00	32
		1.732	2.746	2.756	.472	
44X70X8	S	44,00	70,00	70,20	8,00	32
		1.732	2.756	2.764	.315	
44X72X10	S	44,00	72,00	72,11	10,00	32
		1.732	2.835	2.839	.394	
*44.5X62X10	S	44,50	61,75	62,00	10,00	32
		1.752	2.431	2.441	.394	
*45X54X4.5	S	45,00	53,75	54,00	4,50	32
		1.772	2.116	2.126	.177	
*45X55X5	S	45,00	54,75	55,00	5,00	32
		1.772	2.155	2.165	.197	
*45X55X7	S	45,00	54,75	55,00	7,00	32
		1.772	2.155	2.165	.276	
*45X55X8	S	45,00	54,75	55,00	8,00	32
		1.772	2.155	2.165	.315	
*45X55X10	S	45,00	54,75	55,00	10,00	32
		1.772	2.155	2.165	.394	
*45X56X6	S	45,00	55,75	56,00	6,00	32
		1.772	2.195	2.205	.236	
*45X56X8	S	45,00	55,75	56,00	8,00	32
		1.772	2.195	2.205	.315	
*45X57X9	S	45,00	56,75	57,00	9,00	32
		1.772	2.234	2.244	.354	
*45X57X5.5	S	45,00	56,75	57,00	5,50	32
		1.772	2.234	2.244	.217	
*45X58X8	S	45,00	57,75	58,00	8,00	32
		1.772	2.273	2.283	.315	
*45X58X10	S	45,00	57,75	58,00	10,00	32
		1.772	2.273	2.283	.394	

For Illustration and Material Data See Technical Section

⬅➡ Hydrodynamic Lip Design-Bidirectional

* The U.S. customer service number is 877-4-TIMKEN. The Canadian customer service numbers are 800-565-4927 (English) and 800-565-0438 (French-Canadian).

METRIC SERIES (cont.)

Part No.	Lip Mat'l	Shaft Size	Hsg. Bore	Seal O.D.	Seal Width	Type/ Illus.
45X58X7	S	45,00	58,00	58,28	7,00	35
		1.772	2.283	2.294	.276	
*45X59X7	S	45,00	58,75	59,00	7,00	32
		1.772	2.313	2.323	.276	
*45X59X10	S	45,00	58,75	59,00	10,00	32
		1.772	2.313	2.323	.394	
*45X60X9	S	45,00	59,75	60,00	9,00	32
		1.772	2.352	2.362	.354	
*45X60X12	S	45,00	59,75	60,00	12,00	32
		1.772	2.352	2.362	.472	
45X60X7	S	45,00	60,00	60,20	7,00	35
		1.772	2.362	2.370	.276	
45X60X8	S	45,00	60,00	60,20	8,00	35
		1.772	2.362	2.370	.315	
*45X60X8V	V	45,00	60,00	60,20	8,00	35
		1.772	2.362	2.370	.315	
45X60X10	S	45,00	60,00	60,25	10,00	32
		1.772	2.362	2.372	.394	
*45X62X7	S	45,00	61,75	62,00	7,00	32
		1.772	2.431	2.441	.276	
*45X62X9	S	45,00	61,75	62,00	9,00	32
		1.772	2.431	2.441	.354	
*45X62X10	S	45,00	61,75	62,00	10,00	32
		1.772	2.431	2.441	.394	
*45X62X12	S	45,00	61,75	62,00	12,00	32
		1.772	2.431	2.441	.472	
45X62X8	S	45,00	62,00	62,30	8,00	35
		1.772	2.441	2.453	.315	
*45X62X8V	V	45,00	62,00	62,20	8,00	35
		1.772	2.441	2.449	.315	
*45X63X7	S	45,00	62,75	63,00	7,00	32
		1.772	2.470	2.480	.276	
*45X64X7	S	45,00	63,75	64,00	7,00	32
		1.772	2.510	2.520	.276	
*45X64X10	S	45,00	63,75	64,00	10,00	32
		1.772	2.510	2.520	.394	
*45X65X7	S	45,00	64,75	65,00	7,00	32
		1.772	2.549	2.559	.276	
*45X65X9	S	45,00	64,75	65,00	9,00	32
		1.772	2.549	2.559	.354	
*45X65X10	S	45,00	64,75	65,00	10,00	32
		1.772	2.549	2.559	.394	
*45X65X12	S	45,00	64,75	65,00	12,00	32
		1.772	2.549	2.559	.472	
45X65X8	S	45,00	65,00	65,28	8,00	32
		1.772	2.559	2.570	.315	
*45X65X8V	V	45,00	65,00	65,20	8,00	35
		1.772	2.559	2.567	.315	
*45X66X10	S	45,00	65,75	66,00	10,00	32
		1.772	2.588	2.598	.394	
*45X68X8	S	45,00	67,75	68,00	8,00	32
		1.772	2.667	2.677	.315	
*45X68X9	S	45,00	67,75	68,00	9,00	32
		1.772	2.667	2.677	.354	
*45X68X10	S	45,00	67,75	68,00	10,00	32
		1.772	2.667	2.677	.394	
*45X68X12	S	45,00	67,75	68,00	12,00	32
		1.772	2.667	2.677	.472	
45X68X7	S	45,00	68,00	68,28	7,00	32
		1.772	2.677	2.688	.276	
*45X68X10V	V	45,00	68,00	68,20	10,00	35
		1.772	2.677	2.685	.394	
*45X70X12	S	45,00	69,75	70,00	12,00	32
		1.772	2.746	2.756	.472	
45X70X10	S	45,00	70,00	70,18	10,00	32
		1.772	2.756	2.763	.394	
*45X72X8	S	45,00	71,75	72,00	8,00	32
		1.772	2.825	2.835	.315	
45X72X7	S	45,00	72,00	72,28	7,00	35
		1.772	2.835	2.846	.276	

METRIC SERIES (cont.)

Part No.	Lip Mat'l	Shaft Size	Hsg. Bore	Seal O.D.	Seal Width	Type/ Illus.
*45X72X8V	V	45,00	72,00	72,20	8,00	32
		1.772	2.835	2.843	.315	
45X72X10	S	45,00	72,00	72,20	10,00	35
		1.772	2.835	2.843	.394	
45X72X12	S	45,00	72,00	72,28	12,00	35
		1.772	2.835	2.846	.472	
45X72X95	S	45,00	72,00	72,25	10,00	32
		1.772	2.835	2.844	.394	
*45X75X8	S	45,00	74,75	75,00	8,00	32
		1.772	2.943	2.953	.315	
*45X75X10	S	45,00	74,75	75,00	10,00	32
		1.772	2.943	2.953	.394	
*45X75X12	S	45,00	74,75	75,00	12,00	32
		1.772	2.943	2.953	.472	
45X75X7	S	45,00	75,00	75,20	7,00	32
		1.772	2.953	2.961	.276	
*45X75X10V	V	45,00	75,00	75,20	10,00	32
		1.772	2.953	2.961	.394	
*45X78X12	S	45,00	77,72	78,00	12,00	32
		1.772	3.060	3.071	.472	
*45X80X12	S	45,00	79,72	80,00	12,00	32
		1.772	3.139	3.150	.472	
45X80X10	S	45,00	80,00	80,28	10,00	32
		1.772	3.150	3.161	.394	
*45X82X12	S	45,00	81,72	82,00	12,00	32
		1.772	3.217	3.228	.472	
*45X82X8	S	45,00	82,00	82,20	8,00	32
		1.772	3.228	3.236	.315	
*45X85X12	S	45,00	84,72	85,00	12,00	32
		1.772	3.335	3.346	.472	
45X85X10	S	45,00	85,00	85,20	10,00	35
		1.772	3.346	3.354	.394	
45X85X13	S	45,00	85,00	85,25	13,00	45
		1.772	3.346	3.356	.512	
*45X90X10	S	45,00	89,72	90,00	10,00	32
		1.772	3.532	3.543	.394	
*45X100X10	S	45,00	99,72	100,00	10,00	32
		1.772	3.926	3.937	.394	
*45X63.5X10	S	45,00	63,25	63,50	10,00	32
		1.772	2.490	2.500	.394	
*45X68.3X7	S	45,00	68,05	68,30	7,00	32
		1.772	2.679	2.689	.276	
*45X74.5X12	S	45,00	74,25	74,50	12,00	32
		1.772	2.923	2.933	.472	
*46X54X9	S	46,00	53,75	54,00	9,00	32
		1.811	2.116	2.126	.354	
*46X58X7	S	46,00	57,75	58,00	7,00	32
		1.811	2.273	2.283	.276	
*46X59X8	S	46,00	59,00	59,20	8,00	32
		1.811	2.323	2.331	.315	
*46X60X7	S	46,00	59,75	60,00	7,00	32
		1.811	2.352	2.362	.276	
*46X60X10	S	46,00	59,75	60,00	10,00	32
		1.811	2.352	2.362	.394	
*46X60X8	S	46,00	60,00	60,20	8,00	32
		1.811	2.362	2.370	.315	
*46X62X8	S	46,00	62,00	62,20	8,00	32
		1.811	2.441	2.449	.315	
46X65X7	S	46,00	65,00	65,20	7,00	32
		1.811	2.559	2.567	.276	
*46X68X8	S	46,00	68,00	68,20	8,00	32
		1.811	2.677	2.685	.315	
46X70X8	S	46,00	70,00	70,20	8,00	32
		1.811	2.756	2.764	.315	
*46X72X8	S	46,00	72,00	72,20	8,00	32
		1.811	2.835	2.843	.315	
*46X73X8	S	46,00	73,00	73,20	8,00	32
		1.811	2.874	2.882	.315	
*46X59.1X12	S	46,00	58,85	59,10	12,00	32
		1.811	2.317	2.327	.472	

For Illustration and Material Data See Technical Section

* The U.S. customer service number is 877-4-TIMKEN. The Canadian customer service numbers are 800-565-4927 (English) and 800-565-0438 (French-Canadian).

METRIC SERIES (cont.)

Part No.	Lip Mat'l	Shaft Size	Hsg. Bore	Seal O.D.	Seal Width	Type/ Illus.
*47X57X7	S	47,00	56,75	57,00	7,00	32
		1.850	2.234	2.244	.276	
*47X60X7	S	47,00	59,75	60,00	7,00	32
		1.850	2.352	2.362	.276	
*47X60X8	S	47,00	60,00	60,20	8,00	32
		1.850	2.362	2.370	.315	
*47X62X6	S	47,00	61,75	62,00	6,00	32
		1.850	2.431	2.441	.236	
47X62X8	S	47,00	62,00	62,20	8,00	32
		1.850	2.441	2.449	.315	
*47X65X10	S	47,00	64,75	65,00	10,00	32
		1.850	2.549	2.559	.394	
47X65X8	S	47,00	65,00	65,20	8,00	32
		1.850	2.559	2.567	.315	
47X68X10	S	47,00	68,00	68,27	10,00	32
		1.850	2.677	2.688	.394	
47X70X10	S	47,00	70,00	70,20	10,00	32
		1.850	2.756	2.764	.394	
*48X58X4	S	48,00	57,75	58,00	4,00	32
		1.890	2.273	2.283	.157	
*48X58X8	S	48,00	58,00	58,20	8,00	32
		1.890	2.283	2.291	.315	
*48X59X6	S	48,00	58,75	59,00	6,00	32
		1.890	2.313	2.323	.236	
*48X60X8	S	48,00	59,75	60,00	8,00	32
		1.890	2.352	2.362	.315	
*48X60X10	S	48,00	59,75	60,00	10,00	32
		1.890	2.352	2.362	.394	
*48X62X7	S	48,00	61,75	62,00	7,00	32
		1.890	2.431	2.441	.276	
*48X62X9	S	48,00	61,75	62,00	9,00	32
		1.890	2.431	2.441	.354	
*48X62X10	S	48,00	61,75	62,00	10,00	32
		1.890	2.431	2.441	.394	
*48X62X12	S	48,00	61,75	62,00	12,00	32
		1.890	2.431	2.441	.472	
48X62X8	S	48,00	62,00	62,10	8,00	35
		1.890	2.441	2.445	.315	
*48X62X8V	V	48,00	62,00	62,20	8,00	35
		1.890	2.441	2.449	.315	
48X63X9	S	48,00	63,00	63,09	9,00	47
		1.890	2.480	2.484	.354	
*48X65X7	S	48,00	64,75	65,00	7,00	32
		1.890	2.549	2.559	.276	
*48X65X9	S	48,00	64,75	65,00	9,00	32
		1.890	2.549	2.559	.354	
*48X65X12	S	48,00	64,75	65,00	12,00	32
		1.890	2.549	2.559	.472	
48X65X10	S	48,00	65,00	65,30	10,00	32
		1.890	2.559	2.571	.394	
*48X65X10V	V	48,00	65,00	65,20	10,00	32
		1.890	2.559	2.567	.394	
*48X67X11	S	48,00	66,75	67,00	11,00	32
		1.890	2.628	2.638	.433	
*48X68X8	S	48,00	67,75	68,00	8,00	32
		1.890	2.667	2.677	.315	
48X68X10	N	48,00	68,00	68,27	10,00	32
		1.890	2.677	2.688	.394	
*48X70X7	S	48,00	69,75	70,00	7,00	32
		1.890	2.746	2.756	.276	
*48X70X10	S	48,00	69,75	70,00	10,00	32
		1.890	2.746	2.756	.394	
*48X70X12	S	48,00	69,75	70,00	12,00	32
		1.890	2.746	2.756	.472	
48X70X8	S	48,00	70,00	70,20	8,00	35
		1.890	2.756	2.764	.315	
48X70X9	S	48,00	70,00	70,28	9,00	35
		1.890	2.756	2.767	.354	
*48X72X8	S	48,00	71,75	72,00	8,00	32
		1.890	2.825	2.835	.315	

METRIC SERIES (cont.)

Part No.	Lip Mat'l	Shaft Size	Hsg. Bore	Seal O.D.	Seal Width	Type/ Illus.
*48X72X9	S	48,00	71,75	72,00	9,00	32
		1.890	2.825	2.835	.354	
*48X72X10	S	48,00	71,75	72,00	10,00	32
		1.890	2.825	2.835	.394	
*48X72X12	S	48,00	71,75	72,00	12,00	32
		1.890	2.825	2.835	.472	
48X72X7	S	48,00	72,00	72,31	7,00	32
		1.890	2.835	2.847	.276	
*48X72X8V	V	48,00	72,00	72,20	8,00	35
		1.890	2.835	2.843	.315	
*48X74X10	S	48,00	73,75	74,00	10,00	32
		1.890	2.903	2.913	.394	
*48X74X12	S	48,00	73,75	74,00	12,00	32
		1.890	2.903	2.913	.472	
*48X75X12	S	48,00	74,75	75,00	12,00	32
		1.890	2.943	2.953	.472	
48X75X10	S	48,00	75,00	75,20	10,00	32
		1.890	2.953	2.961	.394	
*48X78X8	S	48,00	78,00	78,20	8,00	32
		1.890	3.071	3.079	.315	
*48X80X10	S	48,00	79,72	80,00	10,00	32
		1.890	3.139	3.150	.394	
48X80X8	S	48,00	80,00	80,20	8,00	32
		1.890	3.150	3.157	.315	
*48X82X10	S	48,00	81,72	82,00	10,00	32
		1.890	3.217	3.228	.394	
*48X82X8	S	48,00	82,00	82,20	8,00	32
		1.890	3.228	3.236	.315	
*48X85X10	S	48,00	84,72	85,00	10,00	32
		1.890	3.335	3.346	.394	
*48X85X8	S	48,00	85,00	85,20	8,00	32
		1.890	3.346	3.354	.315	
*48X88X8	S	48,00	88,00	88,20	8,00	32
		1.890	3.465	3.472	.315	
*48X90X13	S	48,00	89,72	90,00	13,00	32
		1.890	3.532	3.543	.512	
48X90X10	S	48,00	90,00	90,20	10,00	35
		1.890	3.543	3.551	.394	
*48X70.5X10	S	48,00	70,25	70,50	10,00	32
		1.890	2.766	2.776	.394	
*48X72.5X10	S	48,00	72,25	72,50	10,00	32
		1.890	2.844	2.854	.394	
*49X62X6	S	49,00	61,75	62,00	6,00	32
		1.929	2.431	2.441	.236	
*49X76X15	S	49,00	75,75	76,00	15,00	32
		1.929	2.982	2.992	.591	
*50X60X8	S	50,00	59,75	60,00	8,00	32
		1.969	2.352	2.362	.315	
*50X60X10	S	50,00	59,75	60,00	10,00	32
		1.969	2.352	2.362	.394	
*50X62X9	S	50,00	61,75	62,00	9,00	32
		1.969	2.431	2.441	.354	
*50X62X10	S	50,00	61,75	62,00	10,00	32
		1.969	2.431	2.441	.394	
50X62X7	S	50,00	62,00	62,28	7,00	32
		1.969	2.441	2.452	.276	
*50X63X8	S	50,00	62,75	63,00	8,00	32
		1.969	2.470	2.480	.315	
*50X64X8	S	50,00	63,75	64,00	8,00	32
		1.969	2.510	2.520	.315	
*50X64X9	S	50,00	63,75	64,00	9,00	32
		1.969	2.510	2.520	.354	
*50X64X10	S	50,00	63,75	64,00	10,00	32
		1.969	2.510	2.520	.394	
*50X65X9	S	50,00	64,75	65,00	9,00	32
		1.969	2.549	2.559	.354	
*50X65X10	S	50,00	64,75	65,00	10,00	32
		1.969	2.549	2.559	.394	
50X65X8	S	50,00	65,00	65,28	8,00	32
		1.969	2.559	2.570	.315	

For Illustration and Material Data See Technical Section

* The U.S. customer service number is 877-4-TIMKEN. The Canadian customer service numbers are 800-565-4927 (English) and 800-565-0438 (French-Canadian).

METRIC SERIES (cont.)

Part No.	Lip Mat'l	Shaft Size	Hsg. Bore	Seal O.D.	Seal Width	Type/ Illus.
*50X65X8V	V	50,00	65,00	65,20	8,00	32
		1.969	2.559	2.567	.315	
*50X66X6	S	50,00	65,75	66,00	6,00	32
		1.969	2.588	2.598	.236	
*50X67X9	S	50,00	66,75	67,00	9,00	32
		1.969	2.628	2.638	.354	
*50X67X10	S	50,00	66,75	67,00	10,00	32
		1.969	2.628	2.638	.394	
*50X68X7	S	50,00	67,75	68,00	7,00	32
		1.969	2.667	2.677	.276	
*50X68X9	S	50,00	67,75	68,00	9,00	32
		1.969	2.667	2.677	.354	
*50X68X10	S	50,00	67,75	68,00	10,00	32
		1.969	2.667	2.677	.394	
50X68X8	S	50,00	68,00	68,28	8,00	35
		1.969	2.677	2.688	.315	
*50X68X8V	V	50,00	68,00	68,20	8,00	32
		1.969	2.677	2.685	.315	
*50X70X10	S	50,00	69,75	70,00	10,00	32
		1.969	2.746	2.756	.394	
*50X70X12	S	50,00	69,75	70,00	12,00	32
		1.969	2.746	2.756	.472	
*50X70X13	S	50,00	69,75	70,00	13,00	32
		1.969	2.746	2.756	.512	
50X70X8	S	50,00	70,00	70,20	8,00	32
		1.969	2.756	2.764	.315	
50X70X9	S	50,00	70,00	70,20	9,00	32
		1.969	2.756	2.764	.354	
*50X70X10V	V	50,00	70,00	70,20	10,00	35
		1.969	2.756	2.764	.394	
*50X72X7	S	50,00	71,75	72,00	7,00	32
		1.969	2.825	2.835	.276	
*50X72X9	S	50,00	71,75	72,00	9,00	32
		1.969	2.825	2.835	.354	
*50X72X10	S	50,00	71,75	72,00	10,00	32
		1.969	2.825	2.835	.394	
*50X72X12	S	50,00	71,75	72,00	12,00	32
		1.969	2.825	2.835	.472	
50X72X8	S	50,00	72,00	72,28	8,00	32
		1.969	2.835	2.846	.315	
*50X72X8V	V	50,00	72,00	72,20	8,00	32
		1.969	2.835	2.843	.315	
*50X73X9	S	50,00	72,75	73,00	9,00	32
		1.969	2.864	2.874	.354	
*50X75X10	S	50,00	74,75	75,00	10,00	32
		1.969	2.943	2.953	.394	
50X75X7	**S**	**50,00**	**75,00**	**75,20**	**7,00**	**32**
		1.969	**2.953**	**2.961**	**.276**	
*50X75X8	S	50,00	75,00	75,20	8,00	32
		1.969	2.953	2.961	.315	
50X75X12	S	50,00	75,00	75,28	12,00	32
		1.969	2.953	2.964	.472	
*50X76X12	S	50,00	75,75	76,00	12,00	32
		1.969	2.982	2.992	.472	
*50X78X12	S	50,00	77,72	78,00	12,00	32
		1.969	3.060	3.071	.472	
*50X78X8	S	50,00	78,00	78,20	8,00	32
		1.969	3.071	3.079	.315	
*50X80X10	S	50,00	79,72	80,00	10,00	32
		1.969	3.139	3.150	.394	
*50X80X12	S	50,00	79,72	80,00	12,00	32
		1.969	3.139	3.150	.472	
*50X80X13	S	50,00	79,72	80,00	13,00	32
		1.969	3.139	3.150	.512	
50X80X8	S	50,00	80,00	80,28	8,00	32
		1.969	3.150	3.161	.315	
*50X80X8V	V	50,00	80,00	80,20	8,00	32
		1.969	3.150	3.157	.315	
*50X81X12	S	50,00	80,72	81,00	12,00	32
		1.969	3.178	3.189	.472	

METRIC SERIES (cont.)

Part No.	Lip Mat'l	Shaft Size	Hsg. Bore	Seal O.D.	Seal Width	Type/ Illus.
*50X82X12	S	50,00	81,72	82,00	12,00	32
		1.969	3.217	3.228	.472	
*50X85X10	S	50,00	84,72	85,00	10,00	32
		1.969	3.335	3.346	.394	
*50X85X12	S	50,00	84,72	85,00	12,00	32
		1.969	3.335	3.346	.472	
50X85X8	S	50,00	85,00	85,20	8,00	32
		1.969	3.346	3.354	.315	
*50X88X8	S	50,00	88,00	88,20	8,00	32
		1.969	3.465	3.472	.315	
*50X90X13	S	50,00	89,72	90,00	13,00	32
		1.969	3.532	3.543	.512	
50X90X8	**S**	**50,00**	**90,00**	**90,20**	**8,00**	**32**
		1.969	**3.543**	**3.551**	**.315**	
50X90X10	S	50,00	90,00	90,28	10,00	35
		1.969	3.543	3.554	.394	
*50X90X10V	V	50,00	90,00	90,20	10,00	35
		1.969	3.543	3.551	.394	
*50X100X10	S	50,00	99,72	100,00	10,00	32
		1.969	3.926	3.937	.394	
*51X63X8	S	51,00	63,00	63,20	8,00	32
		2.008	2.480	2.488	.315	
*51X65X13	S	51,00	64,75	65,00	13,00	32
		2.008	2.549	2.559	.512	
51X65X7	S	51,00	65,00	65,10	7,00	47
		2.008	2.559	2.563	.276	
*51X73X8	S	51,00	73,00	73,20	8,00	32
		2.008	2.874	2.882	.315	
*51X80X8	S	51,00	80,00	80,20	8,00	32
		2.008	3.150	3.157	.315	
*51X81X8	S	51,00	81,00	81,20	8,00	32
		2.008	3.189	3.197	.315	
*51X90X8	S	51,00	90,00	90,20	8,00	32
		2.008	3.543	3.551	.315	
*51X92X8	S	51,00	92,00	92,20	8,00	32
		2.008	3.622	3.630	.315	
*51X66.5X10	S	51,00	66,25	66,50	10,00	32
		2.008	2.608	2.618	.394	
*52X62X7	S	52,00	61,75	62,00	7,00	32
		2.047	2.431	2.441	.276	
*52X62X10	S	52,00	61,75	62,00	10,00	32
		2.047	2.431	2.441	.394	
*52X63X8	S	52,00	62,75	63,00	8,00	32
		2.047	2.470	2.480	.315	
*52X64X9	S	52,00	63,75	64,00	9,00	32
		2.047	2.510	2.520	.354	
*52X65X8	S	52,00	64,75	65,00	8,00	32
		2.047	2.549	2.559	.315	
*52X65X10	S	52,00	64,75	65,00	10,00	32
		2.047	2.549	2.559	.394	
52X65X9	S	52,00	65,00	65,30	9,00	32
		2.047	2.559	2.571	.354	
*52X68X7	S	52,00	67,75	68,00	7,00	32
		2.047	2.667	2.677	.276	
*52X68X10	S	52,00	67,75	68,00	10,00	32
		2.047	2.667	2.677	.394	
52X68X8	S	52,00	68,00	68,28	8,00	32
		2.047	2.677	2.688	.315	
*52X68X8V	V	52,00	68,00	68,20	8,00	35
		2.047	2.677	2.685	.315	
52X69X10	S	52,00	69,00	69,28	10,00	35
		2.047	2.717	2.728	.394	
*52X70X9	S	52,00	69,75	70,00	9,00	32
		2.047	2.746	2.756	.354	
*52X70X13	S	52,00	69,75	70,00	13,00	32
		2.047	2.746	2.756	.512	
52X70X8	S	52,00	70,00	70,20	8,00	32
		2.047	2.756	2.764	.315	
*52X72X9	S	52,00	71,75	72,00	9,00	32
		2.047	2.825	2.835	.354	

For Illustration and Material Data See Technical Section

* The U.S. customer service number is 877-4-TIMKEN. The Canadian customer service numbers are 800-565-4927 (English) and 800-565-0438 (French-Canadian).

METRIC SERIES (cont.)

Part No.	Lip Mat'l	Shaft Size	Hsg. Bore	Seal O.D.	Seal Width	Type/ Illus.
*52X72X10	S	52,00	71,75	72,00	10,00	32
		2.047	2.825	2.835	.394	
*52X72X12	S	52,00	71,75	72,00	12,00	32
		2.047	2.825	2.835	.472	
52X72X8	S	52,00	72,00	72,20	8,00	35
		2.047	2.835	2.843	.315	
*52X72X8V	V	52,00	72,00	72,20	8,00	32
		2.047	2.835	2.843	.315	
*52X75X10	S	52,00	74,75	75,00	10,00	32
		2.047	2.943	2.953	.394	
52X75X12	S	52,00	75,00	75,28	12,00	32
		2.047	2.953	2.964	.472	
*52X78X10	S	52,00	77,72	78,00	10,00	32
		2.047	3.060	3.071	.394	
*52X80X13	S	52,00	79,72	80,00	13,00	32
		2.047	3.139	3.150	.512	
52X80X10⬅➡	S	52,00	80,00	80,28	10,00	32
		2.047	3.150	3.161	.394	
52X82X8	S	52,00	82,00	82,20	8,00	32
		2.047	3.228	3.236	.315	
*52X85X9	S	52,00	84,72	85,00	9,00	32
		2.047	3.335	3.346	.354	
*52X85X10	S	52,00	84,72	85,00	10,00	32
		2.047	3.335	3.346	.394	
52X85X7	S	52,00	85,00	85,20	8,00	32
		2.047	3.346	3.354	.315	
*52X85X8	S	52,00	85,00	85,20	8,00	32
		2.047	3.346	3.354	.315	
*52X90X10	S	52,00	89,72	90,00	10,00	32
		2.047	3.532	3.543	.394	
53X68X10	S	53,00	68,00	68,28	10,00	32
		2.087	2.677	2.688	.394	
*53X72X10	S	53,00	71,75	72,00	10,00	32
		2.087	2.825	2.835	.394	
*53X73X10	S	53,00	72,75	73,00	10,00	32
		2.087	2.864	2.874	.394	
*53X80X13	S	53,00	79,72	80,00	13,00	32
		2.087	3.139	3.150	.512	
*53X68.2X7	S	53,00	67,95	68,20	7,00	32
		2.087	2.675	2.685	.276	
*54X64X9	S	54,00	63,75	64,00	9,00	32
		2.126	2.510	2.520	.354	
*54X65X10	S	54,00	64,75	65,00	10,00	32
		2.126	2.549	2.559	.394	
*54X65X13	S	54,00	64,75	65,00	13,00	32
		2.126	2.549	2.559	.512	
54X65X8	S	54,00	65,00	65,20	8,00	32
		2.126	2.559	2.567	.315	
*54X68X10	S	54,00	67,75	68,00	10,00	32
		2.126	2.667	2.677	.394	
*54X70X9	S	54,00	69,75	70,00	9,00	32
		2.126	2.746	2.756	.354	
54X72X10	S	54,00	72,00	72,25	10,00	32
		2.126	2.835	2.844	.394	
54X73X8	S	54,00	73,00	73,20	8,00	32
		2.126	2.874	2.882	.315	
*54X74X10	S	54,00	73,75	74,00	10,00	32
		2.126	2.903	2.913	.394	
*54X75X10	S	54,00	74,75	75,00	10,00	32
		2.126	2.943	2.953	.394	
*54X76X8	S	54,00	75,75	76,00	8,00	32
		2.126	2.982	2.992	.315	
*54X80X10	S	54,00	79,72	80,00	10,00	32
		2.126	3.139	3.150	.394	
*54X81X10	S	54,00	80,72	81,00	10,00	32
		2.126	3.178	3.189	.394	
*54X81X8	S	54,00	81,00	81,20	8,00	32
		2.126	3.189	3.197	.315	
*54X82X11	S	54,00	81,72	82,00	11,00	32
		2.126	3.217	3.228	.433	

METRIC SERIES (cont.)

Part No.	Lip Mat'l	Shaft Size	Hsg. Bore	Seal O.D.	Seal Width	Type/ Illus.
54X82X10	S	54,00	82,00	82,35	10,00	32
		2.126	3.228	3.242	.394	
54X85X10	S	54,00	85,00	85,28	10,00	32
		2.126	3.346	3.357	.394	
*54X72.5X9	S	54,00	72,25	72,50	9,00	32
		2.126	2.844	2.854	.354	
*54.5X70X8	S	54,50	69,75	70,00	8,00	32
		2.146	2.746	2.756	.315	
*55X65X8	S	55,00	64,75	65,00	8,00	32
		2.165	2.549	2.559	.315	
*55X65X10	S	55,00	64,75	65,00	10,00	32
		2.165	2.549	2.559	.394	
*55X68X10	S	55,00	67,75	68,00	10,00	32
		2.165	2.667	2.677	.394	
55X68X8	S	55,00	68,00	68,28	8,00	32
		2.165	2.677	2.688	.315	
*55X70X9	S	55,00	69,75	70,00	9,00	32
		2.165	2.746	2.756	.354	
*55X70X10	S	55,00	69,75	70,00	10,00	32
		2.165	2.746	2.756	.394	
*55X70X12	S	55,00	69,75	70,00	12,00	32
		2.165	2.746	2.756	.472	
55X70X8	S	55,00	70,00	70,27	8,00	35
		2.165	2.756	2.767	.315	
*55X70X8V	V	55,00	70,00	70,20	8,00	32
		2.165	2.756	2.764	.315	
*55X72X9	S	55,00	71,75	72,00	9,00	32
		2.165	2.825	2.835	.354	
*55X72X10	S	55,00	71,75	72,00	10,00	32
		2.165	2.825	2.835	.394	
*55X72X12	S	55,00	71,75	72,00	12,00	32
		2.165	2.825	2.835	.472	
55X72X8	S	55,00	72,00	72,25	8,00	32
		2.165	2.835	2.844	.315	
*55X72X8V	V	55,00	72,00	72,20	8,00	32
		2.165	2.835	2.843	.315	
*55X73X10	S	55,00	72,75	73,00	10,00	32
		2.165	2.864	2.874	.394	
*55X75X9	S	55,00	74,75	75,00	9,00	32
		2.165	2.943	2.953	.354	
*55X75X12	S	55,00	74,75	75,00	12,00	32
		2.165	2.943	2.953	.472	
55X75X8	S	55,00	75,00	75,20	8,00	35
		2.165	2.953	2.961	.315	
55X75X10	S	55,00	75,00	75,35	10,00	35
		2.165	2.953	2.967	.394	
*55X75X10V	V	55,00	75,00	75,20	10,00	35
		2.165	2.953	2.961	.394	
*55X76X12	S	55,00	75,75	76,00	12,00	32
		2.165	2.982	2.992	.472	
*55X78X9	S	55,00	77,72	78,00	9,00	32
		2.165	3.060	3.071	.354	
*55X78X12	S	55,00	77,72	78,00	12,00	32
		2.165	3.060	3.071	.472	
55X78X10	S	55,00	78,00	78,28	10,00	32
		2.165	3.071	3.082	.394	
*55X80X10	S	55,00	79,72	80,00	10,00	32
		2.165	3.139	3.150	.394	
*55X80X12	S	55,00	79,72	80,00	12,00	32
		2.165	3.139	3.150	.472	
55X80X8	S	55,00	80,00	80,28	8,00	32
		2.165	3.150	3.161	.315	
*55X80X8V	V	55,00	80,00	80,20	8,00	35
		2.165	3.150	3.157	.315	
*55X82X9	S	55,00	81,72	82,00	9,00	32
		2.165	3.217	3.228	.354	
55X82X12	S	55,00	82,00	82,30	12,00	32
		2.165	3.228	3.240	.472	
*55X85X12	S	55,00	84,72	85,00	12,00	32
		2.165	3.335	3.346	.472	

For Illustration and Material Data See Technical Section

⬅➡ Hydrodynamic Lip Design-Bidirectional

* The U.S. customer service number is 877-4-TIMKEN. The Canadian customer service numbers are 800-565-4927 (English) and 800-565-0438 (French-Canadian).

METRIC SERIES (cont.)

Part No.	Lip Mat'l	Shaft Size	Hsg. Bore	Seal O.D.	Seal Width	Type/ Illus.
*55X85X14	S	55,00	84,72	85,00	14,00	32
		2.165	3.335	3.346	.551	
55X85X8	S	55,00	85,00	85,20	8,00	32
		2.165	3.346	3.354	.315	
55X85X10	S	55,00	85,00	85,31	10,00	32
		2.165	3.346	3.359	.394	
55X88X8⬅➡	S	55,00	88,00	88,20	8,00	32
		2.165	3.465	3.472	.315	
*55X88X10	S	55,00	88,00	88,20	8,00	32
		2.165	3.465	3.472	.315	
55X90X8	S	55,00	90,00	90,27	8,00	32
		2.165	3.543	3.554	.315	
*55X90X8	S	55,00	89,72	90,00	8,00	32
		2.165	3.532	3.543	.315	
*55X90X10	S	55,00	89,72	90,00	10,00	32
		2.165	3.532	3.543	.394	
55X90X13	S	55,00	90,00	90,28	13,00	32
		2.165	3.543	3.554	.512	
*55X95X8	S	55,00	95,00	95,20	8,00	32
		2.165	3.740	3.748	.315	
*55X100X10	S	55,00	99,72	100,00	10,00	32
		2.165	3.926	3.937	.394	
*55X100X12	S	55,00	99,72	100,00	12,00	32
		2.165	3.926	3.937	.472	
55X100X7	**S**	***55,00***	***75,00***	***75,20***	***7,00***	**32**
		2.165	**2.953**	**2.961**	**.276**	
55X100X13	S	55,00	100,00	100,30	12,70	45
		2.165	3.937	3.949	.500	
56X68X10	N	56,00	68,00	68,12	10,00	32
		2.205	2.677	2.682	.394	
*56X70X9	S	56,00	69,75	70,00	9,00	32
		2.205	2.746	2.756	.354	
56X70X8	S	56,00	70,00	70,20	8,00	35
		2.205	2.756	2.764	.315	
*56X70X8V	V	56,00	70,00	70,20	8,00	35
		2.205	2.756	2.764	.315	
*56X72X8	S	56,00	71,75	72,00	8,00	32
		2.205	2.825	2.835	.315	
*56X72X9	S	56,00	71,75	72,00	9,00	32
		2.205	2.825	2.835	.354	
56X72X7	S	56,00	72,00	72,20	7,00	32
		2.205	2.835	2.843	.276	
56X72X11.5	S	56,00	72,00	72,40	11,50	35
		2.205	2.835	2.850	.453	
56X72X11.5	S	56,00	72,00	72,40	11,50	35
		2.205	2.835	2.850	.453	
*56X73X10	S	56,00	72,75	73,00	10,00	32
		2.205	2.864	2.874	.394	
56X75X7	S	56,00	75,00	75,20	7,00	32
		2.205	2.953	2.961	.276	
*56X76X8	S	56,00	75,75	76,00	8,00	32
		2.205	2.982	2.992	.315	
*56X78X8	S	56,00	78,00	78,20	8,00	32
		2.205	3.071	3.079	.315	
*56X80X10	S	56,00	79,72	80,00	10,00	32
		2.205	3.139	3.150	.394	
*56X80X13	S	56,00	79,72	80,00	13,00	32
		2.205	3.139	3.150	.512	
56X80X8	S	56,00	80,00	80,28	8,00	32
		2.205	3.150	3.161	.315	
56X82X8	S	56,00	82,00	82,20	8,00	32
		2.205	3.228	3.236	.315	
*56X85X10	S	56,00	84,72	85,00	10,00	32
		2.205	3.335	3.346	.394	
56X85X8	S	56,00	85,00	85,28	8,00	35
		2.205	3.346	3.357	.315	
56X88X8	S	56,00	88,00	88,20	8,00	32
		2.205	3.465	3.472	.315	
56X90X8	S	56,00	90,00	90,20	8,00	32
		2.205	3.543	3.551	.315	

METRIC SERIES (cont.)

Part No.	Lip Mat'l	Shaft Size	Hsg. Bore	Seal O.D.	Seal Width	Type/ Illus.
*57X67X6	S	57,00	66,75	67,00	6,00	32
		2.244	2.628	2.638	.236	
*57X75X12	S	57,00	74,75	75,00	12,00	32
		2.244	2.943	2.953	.472	
*57X80X12	S	57,00	79,72	80,00	12,00	32
		2.244	3.139	3.150	.472	
*57X81X8	S	57,00	81,00	81,20	8,00	32
		2.244	3.189	3.197	.315	
*57X85X10	S	57,00	84,72	85,00	10,00	32
		2.244	3.335	3.346	.394	
*57X85X12	S	57,00	84,72	85,00	12,00	32
		2.244	3.335	3.346	.472	
*57X85X15	S	57,00	84,72	85,00	15,00	32
		2.244	3.335	3.346	.591	
57X85X13	S	57,00	85,00	85,20	13,00	32
		2.244	3.346	3.354	.512	
*57X92X8	S	57,00	92,00	92,20	8,00	32
		2.244	3.622	3.630	.315	
*57X82.5X10	S	57,00	82,22	82,50	10,00	32
		2.244	3.237	3.248	.394	
*58X68X9	S	58,00	67,75	68,00	9,00	32
		2.283	2.667	2.677	.354	
*58X70X7	S	58,00	69,75	70,00	7,00	32
		2.283	2.746	2.756	.276	
*58X70X11	S	58,00	69,75	70,00	11,00	32
		2.283	2.746	2.756	.433	
*58X72X9	S	58,00	71,75	72,00	9,00	32
		2.283	2.825	2.835	.354	
*58X72X10	S	58,00	71,75	72,00	10,00	32
		2.283	2.825	2.835	.394	
58X72X8	S	58,00	72,00	72,28	8,00	32
		2.283	2.835	2.846	.315	
*58X72X8V	V	58,00	72,00	72,20	8,00	35
		2.283	2.835	2.843	.315	
*58X74X10	S	58,00	73,75	74,00	10,00	32
		2.283	2.903	2.913	.394	
58X75X7	S	58,00	75,00	75,26	7,00	32
		2.283	2.953	2.963	.276	
*58X75X9	S	58,00	74,75	75,00	9,00	32
		2.283	2.943	2.953	.354	
*58X75X10	S	58,00	74,75	75,00	10,00	32
		2.283	2.943	2.953	.394	
*58X75X12	S	58,00	74,75	75,00	12,00	32
		2.283	2.943	2.953	.472	
58X75X11	S	58,00	75,00	75,28	11,00	35
		2.283	2.953	2.964	.433	
*58X78X9	S	58,00	77,72	78,00	9,00	32
		2.283	3.060	3.071	.354	
*58X78X12	S	58,00	77,72	78,00	12,00	32
		2.283	3.060	3.071	.472	
*58X78X8	S	58,00	78,00	78,20	8,00	32
		2.283	3.071	3.079	.315	
*58X80X9	S	58,00	79,72	80,00	9,00	32
		2.283	3.139	3.150	.354	
*58X80X10	S	58,00	79,72	80,00	10,00	32
		2.283	3.139	3.150	.394	
*58X80X12	S	58,00	79,72	80,00	12,00	32
		2.283	3.139	3.150	.472	
*58X80X13	S	58,00	79,72	80,00	13,00	32
		2.283	3.139	3.150	.512	
58X80X8	S	58,00	80,00	80,28	8,00	32
		2.283	3.150	3.161	.315	
*58X80X8V	V	58,00	80,00	80,20	8,00	35
		2.283	3.150	3.157	.315	
*58X82X12	S	58,00	81,72	82,00	12,00	32
		2.283	3.217	3.228	.472	
*58X82X8	S	58,00	82,00	82,20	8,00	32
		2.283	3.228	3.236	.315	
*58X85X8	S	58,00	84,72	85,00	8,00	32
		2.283	3.335	3.346	.315	

For Illustration and Material Data See Technical Section

⬅➡ Hydrodynamic Lip Design-Bidirectional

* The U.S. customer service number is 877-4-TIMKEN. The Canadian customer service numbers are 800-565-4927 (English) and 800-565-0438 (French-Canadian).

METRIC SERIES (cont.)

Part No.	Lip Mat'l	Shaft Size	Hsg. Bore	Seal O.D.	Seal Width	Type/ Illus.
*58X85X12	S	58,00 2.283	84,72 3.335	85,00 3.346	12,00 .472	32
58X85X10	S	58,00 2.283	85,00 3.346	85,28 3.357	10,00 .394	35
58X85X13	S	58,00 2.283	85,00 3.346	85,25 3.356	13,00 .512	32
58X88X8	S	58,00 2.283	88,00 3.465	88,20 3.472	8,00 .315	32
58X90X10	S	58,00 2.283	90,00 3.543	90,28 3.554	10,00 .394	35
*58X92X8	S	58,00 2.283	91,72 3.611	92,00 3.622	8,00 .315	32
*60X70X10	S	60,00 2.362	69,75 2.746	70,00 2.756	10,00 .394	32
*60X70X12	S	60,00 2.362	69,75 2.746	70,00 2.756	12,00 .472	32
*60X72X9	S	60,00 2.362	71,75 2.825	72,00 2.835	9,00 .354	32
*60X72X10	S	60,00 2.362	71,75 2.825	72,00 2.835	10,00 .394	32
60X72X8	S	60,00 2.362	72,00 2.835	72,28 2.846	8,00 .315	35
*60X74X10	S	60,00 2.362	73,75 2.903	74,00 2.913	10,00 .394	32
*60X75X9	S	60,00 2.362	74,75 2.943	75,00 2.953	9,00 .354	32
*60X75X10	S	60,00 2.362	74,75 2.943	75,00 2.953	10,00 .394	32
*60X75X12	S	60,00 2.362	74,75 2.943	75,00 2.953	12,00 .472	32
60X75X8	S	60,00 2.362	75,00 2.953	75,28 2.964	8,00 .315	32
*60X75X8V	V	60,00 2.362	75,00 2.953	75,20 2.961	8,00 .315	32
*60X76X9	S	60,00 2.362	75,75 2.982	76,00 2.992	9,00 .354	32
*60X77X12	S	60,00 2.362	76,72 3.020	77,00 3.031	12,00 .472	32
*60X78X9	S	60,00 2.362	77,72 3.060	78,00 3.071	9,00 .354	32
*60X78X10	S	60,00 2.362	77,72 3.060	78,00 3.071	10,00 .394	32
*60X78X8	S	60,00 2.362	78,00 3.071	78,20 3.079	8,00 .315	32
*60X80X9	S	60,00 2.362	79,72 3.139	80,00 3.150	9,00 .354	32
*60X80X10	S	60,00 2.362	79,72 3.139	80,00 3.150	10,00 .394	32
*60X80X12	S	60,00 2.362	79,72 3.139	80,00 3.150	12,00 .472	32
*60X80X13	S	60,00 2.362	79,72 3.139	80,00 3.150	13,00 .512	32
60X80X8	S	60,00 2.362	80,00 3.150	80,20 3.157	8,00 .315	32
*60X80X8V	V	60,00 2.362	80,00 3.150	80,20 3.157	8,00 .315	32
*60X82X9	S	60,00 2.362	81,72 3.217	82,00 3.228	9,00 .354	32
60X82X7	**S**	***60,00*** **2.362**	***82,00*** **3.228**	***82,20*** **3.236**	***7,00*** **.276**	**32**
60X82X12	S	60,00 2.362	82,00 3.228	82,30 3.240	12,00 .472	35
*60X84X10	S	60,00 2.362	83,72 3.296	84,00 3.307	10,00 .394	32
*60X85X6	S	60,00 2.362	84,72 3.335	85,00 3.346	6,00 .236	32
*60X85X10	S	60,00 2.362	84,72 3.335	85,00 3.346	10,00 .394	32
*60X85X13	S	60,00 2.362	84,72 3.335	85,00 3.346	13,00 .512	32

METRIC SERIES (cont.)

Part No.	Lip Mat'l	Shaft Size	Hsg. Bore	Seal O.D.	Seal Width	Type/ Illus.
60X85X8	S	60,00 2.362	85,00 3.346	85,28 3.357	8,00 .315	32
*60X85X8V	V	60,00 2.362	85,00 3.346	85,20 3.354	8,00 .315	32
60X85X12	S	60,00 2.362	85,00 3.346	85,20 3.354	12,00 .472	32
*60X86X10	S	60,00 2.362	85,72 3.375	86,00 3.386	10,00 .394	32
*60X88X8	S	60,00 2.362	88,00 3.465	88,20 3.472	8,00 .315	32
*60X90X11	S	60,00 2.362	89,72 3.532	90,00 3.543	11,00 .433	32
*60X90X12	S	60,00 2.362	89,72 3.532	90,00 3.543	12,00 .472	32
*60X90X13	S	60,00 2.362	89,72 3.532	90,00 3.543	13,00 .512	32
60X90X8	S	60,00 2.362	90,00 3.543	90,25 3.553	8,00 .315	32
60X90X10	S	60,00 2.362	90,00 3.543	90,27 3.554	10,00 .394	35
*60X95X10	S	60,00 2.362	94,72 3.729	95,00 3.740	10,00 .394	32
*60X95X12	S	60,00 2.362	94,72 3.729	95,00 3.740	12,00 .472	32
*60X95X13	S	60,00 2.362	94,72 3.729	95,00 3.740	13,00 .512	32
60X95X8	S	60,00 2.362	95,00 3.740	95,20 3.748	8,00 .315	32
*60X100X13	S	60,00 2.362	99,72 3.926	100,00 3.937	13,00 .512	32
*60X100X8	S	60,00 2.362	100,00 3.937	100,20 3.945	8,00 .315	32
60X100X10⬅➡	N	60,00 2.362	100,00 3.937	100,20 3.945	10,00 .394	32
*60X104X12	S	60,00 2.362	103,72 4.083	104,00 4.094	12,00 .472	32
*60X105X8	S	60,00 2.362	105,00 4.134	105,20 4.142	8,00 .315	32
*60X110X12	S	60,00 2.362	109,72 4.320	110,00 4.331	12,00 .472	32
60X110X8	S	60,00 2.362	110,00 4.331	110,20 4.339	8,00 .315	32
*60X79.5X10	S	60,00 2.362	79,22 3.119	79,50 3.130	10,00 .394	32
*60.5X78X10	S	60,50 2.382	77,72 3.060	78,00 3.071	10,00 .394	32
*62X75X10	S	62,00 2.441	74,75 2.943	75,00 2.953	10,00 .394	32
*62X75X12	S	62,00 2.441	74,75 2.943	75,00 2.953	12,00 .472	32
*62X78X10	S	62,00 2.441	77,72 3.060	78,00 3.071	10,00 .394	32
*62X78X8	S	62,00 2.441	78,00 3.071	78,20 3.079	8,00 .315	32
*62X80X12	S	62,00 2.441	79,72 3.139	80,00 3.150	12,00 .472	32
62X80X9	S	62,00 2.441	80,00 3.150	80,20 3.157	9,00 .315	32
62X80X10	S	62,00 2.441	80,00 3.150	80,28 3.161	10,00 .394	32
*62X80X10V	V	62,00 2.441	80,00 3.150	80,20 3.157	10,00 .394	35
*62X82X10	S	62,00 2.441	81,72 3.217	82,00 3.228	10,00 .394	32
*62X82X8	S	62,00 2.441	82,00 3.228	82,20 3.236	8,00 .315	32
*62X85X10	S	62,00 2.441	84,72 3.335	85,00 3.346	10,00 .394	32
*62X85X12	S	62,00 2.441	84,72 3.335	85,00 3.346	12,00 .472	32

For Illustration and Material Data See Technical Section

⬅➡ Hydrodynamic Lip Design-Bidirectional

* The U.S. customer service number is 877-4-TIMKEN. The Canadian customer service numbers are 800-565-4927 (English) and 800-565-0438 (French-Canadian).

METRIC SERIES (cont.)

Part No.	Lip Mat'l	Shaft Size	Hsg. Bore	Seal O.D.	Seal Width	Type/ Illus.
*62X85X13	S	62,00	84,72	85,00	13,00	32
		2.441	3.335	3.346	.512	
62X85X8	S	62,00	85,00	85,13	8,00	41
		2.441	3.346	3.352	.315	
62X88X8	S	62,00	88,00	88,20	8,00	32
		2.441	3.465	3.472	.315	
*62X89X12	S	62,00	88,72	89,00	12,00	32
		2.441	3.493	3.504	.472	
*62X90X13	S	62,00	89,72	90,00	13,00	32
		2.441	3.532	3.543	.512	
62X90X10	S	62,00	90,00	90,28	10,00	32
		2.441	3.543	3.554	.394	
62X92X8	S	62,00	92,00	92,20	8,00	32
		2.441	3.622	3.630	.315	
*62X95X12	S	62,00	94,72	95,00	12,00	32
		2.441	3.729	3.740	.472	
*62X100X10	S	62,00	99,72	100,00	10,00	32
		2.441	3.926	3.937	.394	
*62X100X12	S	62,00	99,72	100,00	12,00	32
		2.441	3.926	3.937	.472	
62X100X7	S	62,00	100,00	100,30	7,00	32
		2.441	3.937	3.949	.276	
*62X100X8	S	62,00	100,00	100,20	8,00	32
		2.441	3.937	3.945	.315	
*62X110X13	S	62,00	109,72	110,00	13,00	32
		2.441	4.320	4.331	.512	
*63X78X8	S	63,00	78,00	78,20	8,00	32
		2.480	3.071	3.079	.315	
*63X80X9	S	63,00	79,72	80,00	9,00	32
		2.480	3.139	3.150	.354	
*63X80X8	S	63,00	80,00	80,20	8,00	32
		2.480	3.150	3.157	.315	
*63X82X8	S	63,00	82,00	82,20	8,00	32
		2.480	3.228	3.236	.315	
63X85X7	S	63,00	85,00	85,27	7,00	32
		2.480	3.346	3.357	.276	
*63X85X12	S	63,00	84,72	85,00	12,00	32
		2.480	3.335	3.346	.472	
63X85X10	S	63,00	85,00	85,28	10,00	32
		2.480	3.346	3.357	.394	
*63X88X12	S	63,00	87,72	88,00	12,00	32
		2.480	3.454	3.465	.472	
*63X88X8	S	63,00	88,00	88,20	8,00	32
		2.480	3.465	3.472	.315	
63X90X7	S	63,00	90,00	90,27	7,00	32
		2.480	3.543	3.554	.276	
*63X90X12	S	63,00	89,72	90,00	12,00	32
		2.480	3.532	3.543	.472	
63X90X10	S	63,00	90,00	90,14	10,00	32
		2.480	3.543	3.549	.394	
*63X100X10	S	63,00	99,72	100,00	10,00	32
		2.480	3.926	3.937	.394	
*63X100X13	S	63,00	99,72	100,00	13,00	32
		2.480	3.926	3.937	.512	
*63X82.5X10	S	63,00	82,22	82,50	10,00	32
		2.480	3.237	3.248	.394	
*63.5X85X12	S	63,50	84,72	85,00	12,00	32
		2.500	3.335	3.346	.472	
*64X80X12	S	64,00	79,72	80,00	12,00	32
		2.520	3.139	3.150	.472	
*64X80X13	S	64,00	79,72	80,00	13,00	32
		2.520	3.139	3.150	.512	
64X80X8	S	64,00	80,00	80,28	8,00	32
		2.520	3.150	3.161	.315	
*64X85X10	S	64,00	84,72	85,00	10,00	32
		2.520	3.335	3.346	.394	
*64X85X12	S	64,00	84,72	85,00	12,00	32
		2.520	3.335	3.346	.472	
*64X90X13	S	64,00	90,00	90,28	13,00	32
		2.520	3.543	3.554	.512	

METRIC SERIES (cont.)

Part No.	Lip Mat'l	Shaft Size	Hsg. Bore	Seal O.D.	Seal Width	Type/ Illus.
*64X120X12	S	64,00	119,72	120,00	12,00	32
		2.520	4.713	4.724	.472	
*65X75X8	S	65,00	74,75	75,00	8,00	32
		2.559	2.943	2.953	.315	
*65X75X10	S	65,00	74,75	75,00	10,00	32
		2.559	2.943	2.953	.394	
*65X75X12	S	65,00	74,75	75,00	12,00	32
		2.559	2.943	2.953	.472	
*65X78X12	S	65,00	77,72	78,00	12,00	32
		2.559	3.060	3.071	.472	
*65X80X10	S	65,00	79,72	80,00	10,00	32
		2.559	3.139	3.150	.394	
*65X80X12	S	65,00	79,72	80,00	12,00	32
		2.559	3.139	3.150	.472	
65X80X8	S	65,00	80,00	80,28	8,00	32
		2.559	3.150	3.161	.315	
*65X80X8V	V	65,00	80,00	80,20	8,00	32
		2.559	3.150	3.157	.315	
*65X82X9	S	65,00	81,72	82,00	9,00	32
		2.559	3.217	3.228	.354	
*65X82X12	S	65,00	81,72	82,00	12,00	32
		2.559	3.217	3.228	.472	
*65X82X8	S	65,00	82,00	82,20	8,00	32
		2.559	3.228	3.236	.315	
*65X85X12	S	65,00	84,72	85,00	12,00	32
		2.559	3.335	3.346	.472	
*65X85X13	S	65,00	84,72	85,00	13,00	32
		2.559	3.335	3.346	.512	
65X85X8	S	65,00	85,00	85,20	8,00	35
		2.559	3.346	3.354	.315	
*65X85X8V	V	65,00	85,00	85,20	8,00	35
		2.559	3.346	3.354	.315	
65X85X10	S	65,00	85,00	85,27	10,00	32
		2.559	3.346	3.357	.394	
*65X88X12	S	65,00	87,72	88,00	12,00	32
		2.559	3.454	3.465	.472	
*65X88X13	S	65,00	87,72	88,00	13,00	32
		2.559	3.454	3.465	.512	
65X88X8	S	65,00	88,00	88,20	8,00	35
		2.559	3.465	3.472	.315	
65X88X10	S	65,00	88,00	88,20	10,00	32
		2.559	3.465	3.472	.394	
*65X90X8	S	65,00	89,72	90,00	8,00	32
		2.559	3.532	3.543	.315	
*65X90X12	S	65,00	89,72	90,00	12,00	32
		2.559	3.532	3.543	.472	
65X90X7	S	65,00	90,00	90,20	7,00	32
		2.559	3.543	3.551	.276	
65X90X10	S	65,00	90,00	90,28	10,00	32
		2.559	3.543	3.554	.394	
*65X90X10V	V	65,00	90,00	90,20	10,00	32
		2.559	3.543	3.551	.394	
65X90X13	S	65,00	90,00	90,20	13,00	35
		2.559	3.543	3.551	.512	
*65X95X10	S	65,00	94,72	95,00	10,00	32
		2.559	3.729	3.740	.394	
*65X95X12	S	65,00	94,72	95,00	12,00	32
		2.559	3.729	3.740	.472	
*65X95X13	S	65,00	94,72	95,00	13,00	32
		2.559	3.729	3.740	.512	
*65X95X14	S	65,00	94,72	95,00	14,00	32
		2.559	3.729	3.740	.551	
65X95X7	**S**	**65,00**	**95,00**	**95,20**	**7,00**	**32**
		2.559	**3.740**	**3.748**	**.276**	
*65X95X8	S	65,00	95,00	95,20	8,00	32
		2.559	3.740	3.748	.315	
*65X100X12	S	65,00	99,72	100,00	12,00	32
		2.559	3.926	3.937	.472	
*65X100X13	S	65,00	99,72	100,00	13,00	32
		2.559	3.926	3.937	.512	

For Illustration and Material Data See Technical Section

* The U.S. customer service number is 877-4-TIMKEN. The Canadian customer service numbers are 800-565-4927 (English) and 800-565-0438 (French-Canadian).

METRIC SERIES (cont.)

Part No.	Lip Mat'l	Shaft Size	Hsg. Bore	Seal O.D.	Seal Width	Type/ Illus.
65X100X7	S	*65,00*	*100,00*	*100,30*	*7,00*	32
		2.559	3.937	3.949	.276	
*65X100X9.5	S	*65,00*	*99,72*	*100,00*	*9,50*	32
		2.559	3.926	3.937	.374	
65X100X10	S	*65,00*	*100,00*	*100,28*	*10,00*	35
		2.559	3.937	3.948	.394	
*65X100X10V	V	*65,00*	*100,00*	*100,20*	*10,00*	35
		2.559	3.937	3.945	.394	
*65X102X13	S	*65,00*	*101,72*	*102,00*	*13,00*	32
		2.559	4.005	4.016	.512	
*65X105X12	S	*65,00*	*104,72*	*105,00*	*12,00*	32
		2.559	4.123	4.134	.472	
*65X105X8	S	*65,00*	*105,00*	*105,20*	*8,00*	32
		2.559	4.134	4.142	.315	
*65X110X10	S	*65,00*	*109,72*	*110,00*	*10,00*	32
		2.559	4.320	4.331	.394	
*65X110X12	S	*65,00*	*109,72*	*110,00*	*12,00*	32
		2.559	4.320	4.331	.472	
*65X110X13	S	*65,00*	*109,72*	*110,00*	*13,00*	32
		2.559	4.320	4.331	.512	
*65X110X8	S	*65,00*	*110,00*	*110,20*	*8,00*	32
		2.559	4.331	4.339	.315	
*65X115X12	S	*65,00*	*114,72*	*115,00*	*12,00*	32
		2.559	4.517	4.528	.472	
*65X115X13	S	*65,00*	*114,72*	*115,00*	*13,00*	32
		2.559	4.517	4.528	.512	
*65X115X8	S	*65,00*	*115,00*	*115,20*	*8,00*	32
		2.559	4.528	4.535	.315	
*65X120X13	S	*65,00*	*119,72*	*120,00*	*13,00*	32
		2.559	4.713	4.724	.512	
*65X120X8	S	*65,00*	*120,00*	*120,20*	*8,00*	32
		2.559	4.724	4.732	.315	
*65X140X14	S	*65,00*	*139,70*	*140,00*	*14,00*	32
		2.559	5.500	5.512	.551	
*67X82X7	S	*67,00*	*81,72*	*82,00*	*7,00*	32
		2.638	3.217	3.228	.276	
68X82X7	S	*68,00*	*82,00*	*82,20*	*7,00*	32
		2.677	3.228	3.236	.276	
*68X85X10	S	*68,00*	*84,72*	*85,00*	*10,00*	32
		2.677	3.335	3.346	.394	
68X85X8	S	*68,00*	*85,00*	*85,20*	*8,00*	35
		2.677	3.346	3.354	.315	
*68X88X8	S	*68,00*	*88,00*	*88,20*	*8,00*	32
		2.677	3.465	3.472	.315	
*68X90X8	S	*68,00*	*89,72*	*90,00*	*8,00*	32
		2.677	3.532	3.543	.315	
*68X90X12	S	*68,00*	*89,72*	*90,00*	*12,00*	32
		2.677	3.532	3.543	.472	
*68X90X13	S	*68,00*	*89,72*	*90,00*	*13,00*	32
		2.677	3.532	3.543	.512	
68X90X7	S	*68,00*	*90,00*	*90,20*	*7,00*	32
		2.677	3.543	3.551	.276	
68X90X10	S	*68,00*	*90,00*	*90,32*	*10,00*	32
		2.677	3.543	3.556	.394	
*68X90X10V	V	*68,00*	*90,00*	*90,20*	*10,00*	32
		2.677	3.543	3.551	.394	
68X95X7	S	*68,00*	*95,00*	*95,28*	*7,00*	32
		2.677	3.740	3.751	.276	
*68X95X13	S	*68,00*	*94,72*	*95,00*	*13,00*	32
		2.677	3.729	3.740	.512	
*68X95X8	S	*68,00*	*95,00*	*95,20*	*8,00*	32
		2.677	3.740	3.748	.315	
68X95X10	S	*68,00*	*95,00*	*95,20*	*10,00*	35
		2.677	3.740	3.748	.394	
*68X98X10	S	*68,00*	*97,72*	*98,00*	*10,00*	32
		2.677	3.847	3.858	.394	
68X100X7	S	*68,00*	*100,00*	*100,28*	*7,00*	32
		2.677	3.937	3.948	.276	
*68X100X12	S	*68,00*	*99,72*	*100,00*	*12,00*	32
		2.677	3.926	3.937	.472	

METRIC SERIES (cont.)

Part No.	Lip Mat'l	Shaft Size	Hsg. Bore	Seal O.D.	Seal Width	Type/ Illus.
68X100X10	S	*68,00*	*100,00*	*100,20*	*10,00*	35
		2.677	3.937	3.945	.394	
68X100X13	S	*68,00*	*100,00*	*100,28*	*13,00*	32
		2.677	3.937	3.948	.512	
*69X92X12	S	*69,00*	*91,72*	*92,00*	*12,00*	32
		2.717	3.611	3.622	.472	
*70X80X10	S	*70,00*	*79,72*	*80,00*	*10,00*	32
		2.756	3.139	3.150	.394	
*70X83X10	S	*70,00*	*82,72*	*83,00*	*10,00*	32
		2.756	3.257	3.268	.394	
*70X85X9	S	*70,00*	*84,72*	*85,00*	*9,00*	32
		2.756	3.335	3.346	.354	
*70X85X10	S	*70,00*	*84,72*	*85,00*	*10,00*	32
		2.756	3.335	3.346	.394	
70X85X8	S	*70,00*	*85,00*	*85,28*	*8,00*	35
		2.756	3.346	3.357	.315	
*70X87X10	S	*70,00*	*86,72*	*87,00*	*10,00*	32
		2.756	3.414	3.425	.394	
*70X88X10	S	*70,00*	*87,72*	*88,00*	*10,00*	32
		2.756	3.454	3.465	.394	
70X88X8	S	*70,00*	*88,00*	*88,25*	*8,00*	48
		2.756	3.465	3.474	.315	
*70X88X9V	V	*70,00*	*88,00*	*88,20*	*9,00*	35
		2.756	3.465	3.472	.354	
70X88X12	S	*70,00*	*88,00*	*88,25*	*12,00*	32
		2.756	3.465	3.474	.472	
*70X90X8	S	*70,00*	*89,72*	*90,00*	*8,00*	32
		2.756	3.532	3.543	.315	
*70X90X12	S	*70,00*	*89,72*	*90,00*	*12,00*	32
		2.756	3.532	3.543	.472	
*70X90X13	S	*70,00*	*89,72*	*90,00*	*13,00*	32
		2.756	3.532	3.543	.512	
70X90X7	S	*70,00*	*90,00*	*90,20*	*7,00*	32
		2.756	3.543	3.551	.276	
70X90X10	S	*70,00*	*90,00*	*90,32*	*10,00*	32
		2.756	3.543	3.556	.394	
*70X90X10V	V	*70,00*	*90,00*	*90,20*	*10,00*	32
		2.756	3.543	3.551	.394	
70X92X12	S	*70,00*	*92,00*	*92,20*	*12,00*	32
		2.756	3.622	3.630	.472	
*70X95X12	S	*70,00*	*94,72*	*95,00*	*12,00*	32
		2.756	3.729	3.740	.472	
70X95X10	S	*70,00*	*95,00*	*95,28*	*10,00*	32
		2.756	3.740	3.751	.394	
*70X95X10V	V	*70,00*	*95,00*	*95,20*	*10,00*	35
		2.756	3.740	3.748	.394	
70X95X13	S	*70,00*	*95,00*	*95,28*	*13,00*	35
		2.756	3.740	3.751	.512	
*70X100X12	S	*70,00*	*99,72*	*100,00*	*12,00*	32
		2.756	3.926	3.937	.472	
*70X100X14	S	*70,00*	*99,72*	*100,00*	*14,00*	32
		2.756	3.926	3.937	.551	
70X100X10	S	*70,00*	*100,00*	*100,20*	*10,00*	32
		2.756	3.937	3.945	.394	
*70X100X10V	V	*70,00*	*100,00*	*100,20*	*10,00*	35
		2.756	3.937	3.945	.394	
70X100X13	S	*70,00*	*100,00*	*100,28*	*13,00*	32
		2.756	3.937	3.948	.512	
*70X102X13	S	*70,00*	*101,72*	*102,00*	*13,00*	32
		2.756	4.005	4.016	.512	
*70X105X12	S	*70,00*	*104,72*	*105,00*	*12,00*	32
		2.756	4.123	4.134	.472	
70X105X7	S	*70,00*	*105,00*	*105,30*	*7,00*	32
		2.756	4.134	4.146	.276	
*70X105X10	S	*70,00*	*105,00*	*105,20*	*10,00*	32
		2.756	4.134	4.142	.394	
70X105X13	S	*70,00*	*105,00*	*105,20*	*13,00*	35
		2.756	4.134	4.142	.512	
*70X110X12	S	*70,00*	*109,72*	*110,00*	*12,00*	32
		2.756	4.320	4.331	.472	

For Illustration and Material Data See Technical Section

* The U.S. customer service number is 877-4-TIMKEN. The Canadian customer service numbers are 800-565-4927 (English) and 800-565-0438 (French-Canadian).

METRIC SERIES (cont.)

Part No.	Lip Mat'l	Shaft Size	Hsg. Bore	Seal O.D.	Seal Width	Type/ Illus.
*70X110X13	S	70,00	109,72	110,00	13,00	32
		2.756	4.320	4.331	.512	
70X110X10	S	70,00	110,00	110,20	10,00	35
		2.756	4.331	4.339	.394	
*70X112X13	S	70,00	111,72	112,00	13,00	32
		2.756	4.398	4.409	.512	
*70X115X13	S	70,00	114,72	115,00	13,00	32
		2.756	4.517	4.528	.512	
*70X115X15	S	70,00	114,72	115,00	15,00	32
		2.756	4.517	4.528	.591	
*70X120X13	S	70,00	119,72	120,00	13,00	32
		2.756	4.713	4.724	.512	
*71X88X8	S	71,00	87,72	88,00	8,00	32
		2.795	3.454	3.465	.315	
*72X86X7.5	S	72,00	85,72	86,00	7,50	32
		2.835	3.375	3.386	.295	
*72X90X8	S	72,00	89,72	90,00	8,00	32
		2.835	3.532	3.543	.315	
72X90X10	S	72,00	90,00	90,20	10,00	35
		2.835	3.543	3.551	.394	
*72X92X12	S	72,00	91,72	92,00	12,00	32
		2.835	3.611	3.622	.472	
*72X94X12	S	72,00	93,72	94,00	12,00	32
		2.835	3.690	3.701	.472	
*72X95X12	S	72,00	94,72	95,00	12,00	32
		2.835	3.729	3.740	.472	
*72X95X13	S	72,00	94,72	95,00	13,00	32
		2.835	3.729	3.740	.512	
72X95X10	S	72,00	95,00	95,28	10,00	32
		2.835	3.740	3.751	.394	
72X100X10	S	72,00	100,00	100,20	10,00	35
		2.835	3.937	3.945	.394	
72X100X12⬅➡	S	72,00	100,00	100,31	12,00	32
		2.835	3.937	3.949	.472	
*72X105X13	S	72,00	104,72	105,00	13,00	32
		2.835	4.123	4.134	.512	
*72X105X10	S	72,00	105,00	105,20	10,00	32
		2.835	4.134	4.142	.394	
*72X110X10	S	72,00	110,00	110,20	10,00	32
		2.835	4.331	4.339	.394	
*74X90X10	S	74,00	89,72	90,00	10,00	32
		2.913	3.532	3.543	.394	
*74X94X10	S	74,00	93,72	94,00	10,00	32
		2.913	3.690	3.701	.394	
*74X95X7	S	74,00	94,72	95,00	7,00	32
		2.913	3.729	3.740	.276	
*74X100X13	S	74,00	99,72	100,00	13,00	32
		2.913	3.926	3.937	.512	
*75X90X12	S	75,00	89,72	90,00	12,00	32
		2.953	3.532	3.543	.472	
75X90X8	S	75,00	90,00	90,20	8,00	32
		2.953	3.543	3.551	.315	
75X90X10	S	75,00	90,00	90,25	10,00	32
		2.953	3.543	3.553	.394	
*75X92X12	S	75,00	91,72	92,00	12,00	32
		2.953	3.611	3.622	.472	
*75X95X8	S	75,00	94,72	95,00	8,00	32
		2.953	3.729	3.740	.315	
*75X95X12	S	75,00	94,72	95,00	12,00	32
		2.953	3.729	3.740	.472	
*75X95X13	S	75,00	94,72	95,00	13,00	32
		2.953	3.729	3.740	.512	
75X95X10	S	75,00	95,00	95,28	10,00	32
		2.953	3.740	3.751	.394	
*75X95X10V	V	75,00	95,00	95,20	10,00	32
		2.953	3.740	3.748	.394	
*75X100X13	S	75,00	99,72	100,00	13,00	32
		2.953	3.926	3.937	.512	
75X100X10	S	75,00	100,00	100,20	10,00	32
		2.953	3.937	3.945	.394	

METRIC SERIES (cont.)

Part No.	Lip Mat'l	Shaft Size	Hsg. Bore	Seal O.D.	Seal Width	Type/ Illus.
*75X100X10V	V	75,00	100,00	100,20	10,00	32
		2.953	3.937	3.945	.394	
75X100X12	S	75,00	100,00	100,27	12,00	32
		2.953	3.937	3.948	.472	
*75X102X13	S	75,00	101,72	102,00	13,00	32
		2.953	4.005	4.016	.512	
*75X105X15	S	75,00	104,72	105,00	15,00	32
		2.953	4.123	4.134	.591	
75X105X13	S	75,00	105,00	105,27	13,00	32
		2.953	4.134	4.144	.512	
*75X106X10	S	75,00	105,72	106,00	10,00	32
		2.953	4.162	4.173	.394	
*75X110X13	S	75,00	109,72	110,00	13,00	32
		2.953	4.320	4.331	.512	
*75X110X10	S	75,00	110,00	110,20	10,00	32
		2.953	4.331	4.339	.394	
75X110X12	S	75,00	110,00	110,20	12,00	32
		2.953	4.331	4.339	.472	
*75X115X13	S	75,00	114,72	115,00	13,00	32
		2.953	4.517	4.528	.512	
*75X115X9.5	S	75,00	114,72	115,00	9,50	32
		2.953	4.517	4.528	.374	
*75X115X10	S	75,00	115,00	115,20	10,00	32
		2.953	4.528	4.535	.394	
75X115X12	S	75,00	115,00	115,30	12,00	35
		2.953	4.528	4.539	.472	
*75X120X12	S	75,00	119,72	120,00	12,00	32
		2.953	4.713	4.724	.472	
75X120X10	S	75,00	120,00	120,20	10,00	32
		2.953	4.724	4.732	.394	
*75X134X10	S	75,00	133,70	134,00	10,00	32
		2.953	5.264	5.276	.394	
*76X92X10	S	76,00	91,72	92,00	10,00	32
		2.992	3.611	3.622	.394	
*76X94X12	S	76,00	93,72	94,00	12,00	32
		2.992	3.690	3.701	.472	
*76X105X12	S	76,00	104,72	105,00	12,00	32
		2.992	4.123	4.134	.472	
*76X105X13	S	76,00	104,72	105,00	13,00	32
		2.992	4.123	4.134	.512	
*77X100X10	S	77,00	99,72	100,00	10,00	32
		3.031	3.926	3.937	.394	
*78X95X10	S	78,00	95,00	95,20	10,00	32
		3.071	3.740	3.748	.394	
*78X100X13	S	78,00	99,72	100,00	13,00	32
		3.071	3.926	3.937	.512	
78X100X10	S	78,00	100,00	100,27	10,00	32
		3.071	3.937	3.948	.394	
78X105X10	S	78,00	105,00	105,20	10,00	32
		3.071	4.134	4.142	.394	
*78X110X12	S	78,00	109,72	110,00	12,00	32
		3.071	4.320	4.331	.472	
*78X110X13	S	78,00	109,72	110,00	13,00	32
		3.071	4.320	4.331	.512	
*78X110X10	S	78,00	110,00	110,20	10,00	32
		3.071	4.331	4.339	.394	
78X115X10	S	78,00	115,00	115,20	10,00	32
		3.071	4.528	4.535	.394	
*80X95X8	S	80,00	94,72	95,00	8,00	32
		3.150	3.729	3.740	.315	
*80X98X10	S	80,00	97,72	98,00	10,00	32
		3.150	3.847	3.858	.394	
*80X100X8	S	80,00	99,72	100,00	8,00	32
		3.150	3.926	3.937	.315	
*80X100X12	S	80,00	99,72	100,00	12,00	32
		3.150	3.926	3.937	.472	
*80X100X13	S	80,00	99,72	100,00	13,00	32
		3.150	3.926	3.937	.512	
80X100X10	S	80,00	100,00	100,20	10,00	35
		3.150	3.937	3.945	.394	

For Illustration and Material Data See Technical Section

⬅➡ Hydrodynamic Lip Design-Bidirectional

* The U.S. customer service number is 877-4-TIMKEN. The Canadian customer service numbers are 800-565-4927 (English) and 800-565-0438 (French-Canadian).

METRIC SERIES (cont.)

Part No.	Lip Mat'l	Shaft Size	Hsg. Bore	Seal O.D.	Seal Width	Type/ Illus.
*80X100X10V	V	80,00	100,00	100,20	10,00	32
		3.150	3.937	3.945	.394	
*80X105X12	S	80,00	104,72	105,00	12,00	32
		3.150	4.123	4.134	.472	
80X105X10	S	80,00	105,00	105,20	10,00	32
		3.150	4.134	4.142	.394	
*80X105X12V	V	80,00	105,00	105,20	12,00	35
		3.150	4.134	4.142	.472	
80X105X13	S	80,00	105,00	105,27	13,00	32
		3.150	4.134	4.144	.512	
*80X105X14	S	80,00	105,00	105,27	14,00	32
		3.150	4.134	4.144	.551	
*80X110X13	S	80,00	109,72	110,00	13,00	32
		3.150	4.320	4.331	.512	
80X110X10	S	80,00	110,00	110,28	10,00	32
		3.150	4.331	4.342	.394	
*80X110X10V	V	80,00	110,00	110,20	10,00	32
		3.150	4.331	4.339	.394	
80X110X12	S	80,00	110,00	110,28	12,00	35
		3.150	4.331	4.342	.472	
*80X115X10	S	80,00	114,72	115,00	10,00	32
		3.150	4.517	4.528	.394	
*80X115X13	S	80,00	114,72	115,00	13,00	32
		3.150	4.517	4.528	.512	
*80X115X12	S	80,00	115,00	115,20	12,00	32
		3.150	4.528	4.535	.472	
80X120X10	S	80,00	120,00	120,20	10,00	32
		3.150	4.724	4.732	.394	
80X120X13	S	80,00	120,00	120,28	13,00	32
		3.150	4.724	4.735	.512	
80X125X7	S	80,00	125,00	125,27	7,00	32
		3.150	4.921	4.932	.276	
*80X125X10	S	80,00	124,72	125,00	10,00	32
		3.150	4.910	4.921	.394	
*80X125X13	S	80,00	124,72	125,00	13,00	32
		3.150	4.910	4.921	.512	
*80X125X14	S	80,00	124,72	125,00	14,00	32
		3.150	4.910	4.921	.551	
*80X125X12	S	80,00	125,00	125,20	12,00	32
		3.150	4.921	4.929	.472	
*80X130X13	S	80,00	129,70	130,00	13,00	32
		3.150	5.106	5.118	.512	
*80X130X12	S	80,00	130,00	130,20	12,00	32
		3.150	5.118	5.126	.472	
*80X135X12	S	80,00	135,00	135,20	12,00	32
		3.150	5.315	5.323	.472	
*80X140X12	S	80,00	140,00	140,20	12,00	32
		3.150	5.512	5.520	.472	
82X105X13	S	82,00	105,00	105,25	13,00	25
		3.228	4.134	4.144	.512	
*83X104X9	S	83,00	103,72	104,00	9,00	32
		3.268	4.083	4.094	.354	
*83X110X13	S	83,00	109,72	110,00	13,00	32
		3.268	4.320	4.331	.512	
*83X117X14	S	83,00	116,72	117,00	14,00	32
		3.268	4.595	4.606	.551	
*84X100X10	S	84,00	99,72	100,00	10,00	32
		3.307	3.926	3.937	.394	
*84X100X12	S	84,00	100,00	100,20	12,00	32
		3.307	3.937	3.945	.472	
*85X100X9	S	85,00	99,72	100,00	9,00	32
		3.346	3.926	3.937	.354	
*85X100X10	S	85,00	99,72	100,00	10,00	32
		3.346	3.926	3.937	.394	
*85X100X12	S	85,00	99,72	100,00	12,00	32
		3.346	3.926	3.937	.472	
*85X105X12	S	85,00	104,72	105,00	12,00	32
		3.346	4.123	4.134	.472	
85X105X10	S	85,00	105,00	105,28	10,00	32
		3.346	4.134	4.145	.394	

METRIC SERIES (cont.)

Part No.	Lip Mat'l	Shaft Size	Hsg. Bore	Seal O.D.	Seal Width	Type/ Illus.
85X105X13	S	85,00	105,00	105,28	13,00	32
		3.346	4.134	4.145	.512	
*85X110X13	S	85,00	109,72	110,00	13,00	32
		3.346	4.320	4.331	.512	
85X110X10	S	85,00	110,00	110,20	10,00	35
		3.346	4.331	4.339	.394	
85X110X12	S	85,00	110,00	110,28	12,00	32
		3.346	4.331	4.342	.472	
*85X110X12V	V	85,00	110,00	110,20	12,00	32
		3.346	4.331	4.339	.472	
*85X111X10	S	85,00	110,72	111,00	10,00	32
		3.346	4.359	4.370	.394	
85X115X7	S	85,00	115,00	115,27	7,00	32
		3.346	4.528	4.538	.276	
*85X115X15	S	85,00	114,72	115,00	15,00	32
		3.346	4.517	4.528	.591	
*85X115X12	S	85,00	115,00	115,20	12,00	32
		3.346	4.528	4.535	.472	
85X115X13	S	85,00	115,00	115,00	13,00	35
		3.346	4.528	4.528	.512	
*85X120X10	S	85,00	119,72	120,00	10,00	32
		3.346	4.713	4.724	.394	
*85X120X13	S	85,00	119,72	120,00	13,00	32
		3.346	4.713	4.724	.512	
*85X120X15	S	85,00	119,72	120,00	15,00	32
		3.346	4.713	4.724	.591	
85X120X12	S	85,00	120,00	120,28	12,00	32
		3.346	4.724	4.735	.472	
*85X125X13	S	85,00	124,72	125,00	13,00	32
		3.346	4.910	4.921	.512	
*85X125X14	S	85,00	124,72	125,00	14,00	32
		3.346	4.910	4.921	.551	
85X125X12	S	85,00	125,00	125,20	12,00	32
		3.346	4.921	4.929	.472	
*85X130X12	S	85,00	129,70	130,00	12,00	32
		3.346	5.106	5.118	.472	
*85X130X14	S	85,00	129,70	130,00	14,00	32
		3.346	5.106	5.118	.551	
85X130X13	S	85,00	130,00	130,15	12,70	48
		3.346	5.118	5.124	.500	
*85X140X12	S	85,00	139,70	140,00	12,00	32
		3.346	5.500	5.512	.472	
*85X114.5X12	S	85,00	114,22	114,50	12,00	32
		3.346	4.497	4.508	.472	
*86X100X10	S	86,00	99,72	100,00	10,00	32
		3.386	3.926	3.937	.394	
*88X108X11	S	88,00	107,72	108,00	11,00	32
		3.465	4.241	4.252	.433	
88X110X12	S	88,00	110,00	110,28	12,00	35
		3.465	4.331	4.342	.472	
*88X115X12	S	88,00	115,00	115,20	12,00	32
		3.465	4.528	4.535	.472	
*88X120X12	S	88,00	120,00	120,20	12,00	32
		3.465	4.724	4.732	.472	
*90X100X7	S	90,00	99,72	100,00	7,00	32
		3.543	3.926	3.937	.276	
*90X100X12	S	90,00	99,72	100,00	12,00	32
		3.543	3.926	3.937	.472	
*90X105X12	S	90,00	104,72	105,00	12,00	32
		3.543	4.123	4.134	.472	
*90X105X13	S	90,00	104,72	105,00	13,00	32
		3.543	4.123	4.134	.512	
*90X110X10	S	90,00	109,72	110,00	10,00	32
		3.543	4.320	4.331	.394	
90X110X12	S	90,00	110,00	110,20	12,00	35
		3.543	4.331	4.339	.472	
*90X110X12V	V	90,00	110,00	110,20	12,00	32
		3.543	4.331	4.339	.472	
*90X110X13	S	90,00	110,00	110,31	13,00	35
		3.543	4.331	4.343	.512	

For Illustration and Material Data See Technical Section

* The U.S. customer service number is 877-4-TIMKEN. The Canadian customer service numbers are 800-565-4927 (English) and 800-565-0438 (French-Canadian).

METRIC SERIES (cont.)

Part No.	Lip Mat'l	Shaft Size	Hsg. Bore	Seal O.D.	Seal Width	Type/ Illus.
*90X112X12	S	90,00	111,72	112,00	12,00	32
		3.543	4.398	4.409	.472	
*90X115X10	S	90,00	114,72	115,00	10,00	32
		3.543	4.517	4.528	.394	
*90X115X13	S	90,00	114,72	115,00	13,00	32
		3.543	4.517	4.528	.512	
90X115X12	S	90,00	115,00	115,20	12,00	32
		3.543	4.528	4.535	.472	
*90X118X12	S	90,00	117,72	118,00	12,00	32
		3.543	4.635	4.646	.472	
*90X120X13	S	90,00	119,72	120,00	13,00	32
		3.543	4.713	4.724	.512	
90X120X12⬅➡	S	90,00	120,00	120,28	12,00	32
		3.543	4.724	4.735	.472	
*90X120X12V	V	90,00	120,00	120,20	12,00	35
		3.543	4.724	4.732	.472	
*90X125X15	S	90,00	124,72	125,00	15,00	32
		3.543	4.910	4.921	.591	
90X125X7	S	90,00	125,00	125,70	7,00	32
		3.543	4.921	4.949	.276	
*90X125X12	S	90,00	125,00	125,20	12,00	32
		3.543	4.921	4.929	.472	
90X125X13	S	90,00	125,00	125,30	13,00	32
		3.543	4.921	4.933	.512	
*90X130X10	S	90,00	129,70	130,00	10,00	32
		3.543	5.106	5.118	.394	
*90X130X13	S	90,00	129,70	130,00	13,00	32
		3.543	5.106	5.118	.512	
*90X130X12	S	90,00	130,00	130,20	12,00	32
		3.543	5.118	5.126	.472	
*90X135X13	S	90,00	134,70	135,00	13,00	32
		3.543	5.303	5.315	.512	
*90X135X12	S	90,00	135,00	135,20	12,00	32
		3.543	5.315	5.323	.472	
*90X140X12	S	90,00	140,00	140,20	12,00	32
		3.543	5.512	5.520	.472	
90X145X14	S	90,00	145,00	145,20	14,00	32
		3.543	5.709	5.717	.551	
*90X160X10	S	90,00	159,70	160,00	10,00	32
		3.543	6.287	6.299	.394	
*90X112.7X13	S	90,00	112,42	112,70	13,00	32
		3.543	4.426	4.437	.512	
*92X120X12	S	92,00	119,72	120,00	12,00	32
		3.622	4.713	4.724	.472	
92X120X13	S	92,00	120,00	120,24	13,00	35
		3.622	4.724	4.734	.512	
*95X105X13	S	95,00	104,72	105,00	13,00	32
		3.740	4.123	4.134	.512	
*95X110X11	S	95,00	109,72	110,00	11,00	32
		3.740	4.320	4.331	.433	
*95X110X12	S	95,00	109,72	110,00	12,00	32
		3.740	4.320	4.331	.472	
95X110X10	S	95,00	110,00	110,20	10,00	32
		3.740	4.331	4.339	.394	
95X115X12	S	95,00	115,00	115,28	12,00	35
		3.740	4.528	4.539	.472	
*95X115X13	S	95,00	115,00	115,28	13,00	35
		3.740	4.528	4.539	.512	
*95X115X13V	V	95,00	115,00	115,20	13,00	32
		3.740	4.528	4.535	.512	
*95X120X8	S	95,00	119,72	120,00	8,00	32
		3.740	4.713	4.724	.315	
*95X120X13	S	95,00	119,72	120,00	13,00	32
		3.740	4.713	4.724	.512	
95X120X12	S	95,00	120,00	120,28	12,00	32
		3.740	4.724	4.735	.472	
*95X120X12V	V	95,00	120,00	120,20	12,00	35
		3.740	4.724	4.732	.472	
*95X125X13	S	95,00	124,72	125,00	13,00	32
		3.740	4.910	4.921	.512	

METRIC SERIES (cont.)

Part No.	Lip Mat'l	Shaft Size	Hsg. Bore	Seal O.D.	Seal Width	Type/ Illus.
95X125X12	S	95,00	125,00	125,28	12,00	35
		3.740	4.921	4.932	.472	
*95X130X13	S	95,00	129,70	130,00	13,00	32
		3.740	5.106	5.118	.512	
95X130X12	S	95,00	130,00	130,28	12,00	32
		3.740	5.118	5.129	.472	
*95X135X13	S	95,00	134,70	135,00	13,00	32
		3.740	5.303	5.315	.512	
*95.25X120.65X12.7	S	95,25	120,37	120,65	12,70	32
		3.750	4.739	4.750	.500	
98X120X13	S	98,00	120,00	120,20	13,00	35
		3.858	4.724	4.732	.512	
*100X114X10	S	100,00	113,72	114,00	10,00	32
		3.937	4.477	4.488	.394	
*100X115X9	S	100,00	114,72	115,00	9,00	32
		3.937	4.517	4.528	.354	
*100X115X10	S	100,00	114,72	115,00	10,00	32
		3.937	4.517	4.528	.394	
*100X115X12	S	100,00	114,72	115,00	12,00	32
		3.937	4.517	4.528	.472	
*100X120X11	S	100,00	119,72	120,00	11,00	32
		3.937	4.713	4.724	.433	
*100X120X13	S	100,00	119,72	120,00	13,00	32
		3.937	4.713	4.724	.512	
100X120X10	S	100,00	120,00	120,30	10,00	35
		3.937	4.724	4.736	.394	
100X120X12	S	100,00	120,00	120,28	12,00	32
		3.937	4.724	4.735	.472	
*100X120X12V	V	100,00	120,00	120,20	12,00	32
		3.937	4.724	4.732	.472	
*100X125X10	S	100,00	124,72	125,00	10,00	32
		3.937	4.910	4.921	.394	
*100X125X13	S	100,00	124,72	125,00	13,00	32
		3.937	4.910	4.921	.512	
100X125X12	S	100,00	125,00	125,28	12,00	32
		3.937	4.921	4.932	.472	
*100X125X12V	V	100,00	125,00	125,20	12,00	35
		3.937	4.921	4.929	.472	
*100X127X10	S	100,00	126,72	127,00	10,00	32
		3.937	4.989	5.000	.394	
*100X130X10	S	100,00	129,70	130,00	10,00	32
		3.937	5.106	5.118	.394	
*100X130X13	S	100,00	129,70	130,00	13,00	32
		3.937	5.106	5.118	.512	
100X130X12	S	100,00	130,00	130,28	12,00	32
		3.937	5.118	5.129	.472	
*100X130X12V	V	100,00	130,00	130,20	12,00	32
		3.937	5.118	5.126	.472	
*100X135X12	S	100,00	134,70	135,00	12,00	32
		3.937	5.303	5.315	.472	
*100X135X13	S	100,00	134,70	135,00	13,00	32
		3.937	5.303	5.315	.512	
*100X135X14	S	100,00	134,70	135,00	14,00	32
		3.937	5.303	5.315	.551	
*100X140X12	S	100,00	139,70	140,00	12,00	32
		3.937	5.500	5.512	.472	
*100X140X13	S	100,00	139,70	140,00	13,00	32
		3.937	5.500	5.512	.512	
*100X150X10	S	100,00	149,70	150,00	10,00	32
		3.937	5.894	5.906	.394	
*100X150X13	S	100,00	149,70	150,00	13,00	32
		3.937	5.894	5.906	.512	
*102X125X12	S	102,00	125,00	125,20	12,00	32
		4.016	4.921	4.929	.472	
102X130X13	S	102,00	130,00	130,28	13,00	35
		4.016	5.118	5.129	.512	
*105X125X12	S	105,00	124,72	125,00	12,00	32
		4.134	4.910	4.921	.472	
105X125X13	S	105,00	125,00	125,28	13,00	32
		4.134	4.921	4.932	.512	

For Illustration and Material Data See Technical Section

⬅➡ Hydrodynamic Lip Design-Bidirectional

* The U.S. customer service number is 877-4-TIMKEN. The Canadian customer service numbers are 800-565-4927 (English) and 800-565-0438 (French-Canadian).

METRIC SERIES (cont.)

Part No.	Lip Mat'l	Shaft Size	Hsg. Bore	Seal O.D.	Seal Width	Type/ Illus.
*105X130X13	S	*105,00*	*129,70*	*130,00*	*13,00*	32
		4.134	5.106	5.118	.512	
*105X130X15	S	*105,00*	*129,70*	*130,00*	*15,00*	32
		4.134	5.106	5.118	.591	
105X130X12	S	*105,00*	*130,00*	*130,28*	*12,00*	32
		4.134	5.118	5.129	.472	
*105X130X12V	V	*105,00*	*130,00*	*130,20*	*12,00*	32
		4.134	5.118	5.126	.472	
*105X135X13	S	*105,00*	*134,70*	*135,00*	*13,00*	32
		4.134	5.303	5.315	.512	
*105X135X14	S	*105,00*	*134,70*	*135,00*	*14,00*	32
		4.134	5.303	5.315	.551	
*105X135X15	S	*105,00*	*134,70*	*135,00*	*15,00*	32
		4.134	5.303	5.315	.591	
*105X135X12	S	*105,00*	*135,00*	*135,20*	*12,00*	32
		4.134	5.315	5.323	.472	
*105X140X13	S	*105,00*	*139,70*	*140,00*	*13,00*	32
		4.134	5.500	5.512	.512	
*105X140X15	S	*105,00*	*139,70*	*140,00*	*15,00*	32
		4.134	5.500	5.512	.591	
105X140X12	S	*105,00*	*140,00*	*140,28*	*12,00*	32
		4.134	5.512	5.523	.472	
*105X145X15	S	*105,00*	*144,70*	*145,00*	*15,00*	32
		4.134	5.697	5.709	.591	
*105X145X12	S	*105,00*	*145,00*	*145,20*	*12,00*	32
		4.134	5.709	5.717	.472	
*105X160X15	S	*105,00*	*160,00*	*160,20*	*15,00*	32
		4.134	6.299	6.307	.591	
*106X126X12	S	*106,00*	*125,72*	*126,00*	*12,00*	32
		4.173	4.950	4.961	.472	
*110X125X12	S	*110,00*	*124,72*	*125,00*	*12,00*	32
		4.331	4.910	4.921	.472	
*110X130X13	S	*110,00*	*129,70*	*130,00*	*13,00*	32
		4.331	5.106	5.118	.512	
110X130X12	S	*110,00*	*130,00*	*130,28*	*12,00*	32
		4.331	5.118	5.129	.472	
*110X130X12V	V	*110,00*	*130,00*	*130,20*	*12,00*	32
		4.331	5.118	5.126	.472	
*110X135X12	S	*110,00*	*135,00*	*135,20*	*12,00*	32
		4.331	5.315	5.323	.472	
110X135X13	S	*110,00*	*135,00*	*135,30*	*13,00*	32
		4.331	5.315	5.327	.512	
*110X140X14	S	*110,00*	*139,70*	*140,00*	*14,00*	32
		4.331	5.500	5.512	.551	
110X140X12	S	*110,00*	*140,00*	*140,28*	*12,00*	32
		4.331	5.512	5.523	.472	
*110X140X12V	V	*110,00*	*140,00*	*140,28*	*12,00*	32
		4.331	5.512	5.523	.472	
110X140X13	S	*110,00*	*140,00*	*140,23*	*13,00*	32
		4.331	5.512	5.521	.512	
*110X145X14	S	*110,00*	*144,70*	*145,00*	*14,00*	32
		4.331	5.697	5.709	.551	
*110X145X12	S	*110,00*	*145,00*	*145,20*	*12,00*	32
		4.331	5.709	5.717	.472	
110X145X13	S	*110,00*	*145,00*	*145,30*	*13,00*	35
		4.331	5.709	5.720	.512	
110X150X12	S	*110,00*	*150,00*	*150,25*	*12,00*	35
		4.330	5.905	5.915	0.472	
*110X150X13	S	*110,00*	*149,70*	*150,00*	*13,00*	32
		4.331	5.894	5.906	.512	
110X150X15	S	*110,00*	*150,00*	*150,28*	*15,00*	35
		4.331	5.906	5.917	.591	
*110X155X15	S	*110,00*	*155,00*	*155,20*	*15,00*	32
		4.331	6.102	6.110	.591	
*110X160X12	S	*110,00*	*159,70*	*160,00*	*12,00*	32
		4.331	6.287	6.299	.472	
*110X160X15	S	*110,00*	*160,00*	*160,20*	*15,00*	32
		4.331	6.299	6.307	.591	
*110X167X17	S	*110,00*	*166,70*	*167,00*	*17,00*	32
		4.331	6.563	6.575	.669	

METRIC SERIES (cont.)

Part No.	Lip Mat'l	Shaft Size	Hsg. Bore	Seal O.D.	Seal Width	Type/ Illus.
*110X170X12	S	*110,00*	*169,70*	*170,00*	*12,00*	32
		4.331	6.681	6.693	.472	
*112X135X15	S	*112,00*	*135,00*	*135,20*	*15,00*	32
		4.409	5.315	5.323	.591	
112X140X13	S	*112,00*	*140,00*	*140,32*	*13,00*	35
		4.409	5.512	5.524	.512	
*112X142X14	S	*112,00*	*141,70*	*142,00*	*14,00*	32
		4.409	5.579	5.591	.551	
*112X145X15	S	*112,00*	*145,00*	*145,20*	*15,00*	32
		4.409	5.709	5.717	.591	
*112X150X15	S	*112,00*	*150,00*	*150,20*	*15,00*	32
		4.409	5.906	5.913	.591	
114X140X13	S	*114,00*	*140,00*	*140,28*	*13,00*	32
		4.488	5.512	5.523	.512	
*115X135X15	S	*115,00*	*135,00*	*135,20*	*15,00*	32
		4.528	5.315	5.323	.591	
*115X140X13	S	*115,00*	*139,70*	*140,00*	*13,00*	32
		4.528	5.500	5.512	.512	
*115X140X14	S	*115,00*	*139,70*	*140,00*	*14,00*	32
		4.528	5.500	5.512	.551	
115X140X12	S	*115,00*	*140,00*	*140,28*	*12,00*	32
		4.528	5.512	5.523	.472	
*115X140X12V	V	*115,00*	*140,00*	*140,20*	*12,00*	35
		4.528	5.512	5.520	.472	
*115X145X16	S	*115,00*	*144,70*	*145,00*	*16,00*	32
		4.528	5.697	5.709	.630	
115X145X13	S	*115,00*	*145,00*	*145,30*	*13,00*	35
		4.528	5.709	5.720	.512	
115X145X14⬅➡	S	*115,00*	*145,00*	*145,20*	*14,00*	32
		4.528	5.709	5.717	.551	
*115X145X15	S	*115,00*	*145,00*	*145,20*	*15,00*	32
		4.528	5.709	5.717	.591	
*115X150X15	S	*115,00*	*149,70*	*150,00*	*15,00*	32
		4.528	5.894	5.906	.591	
115X150X12	S	*115,00*	*150,00*	*150,28*	*12,00*	35
		4.528	5.906	5.917	.472	
*115X155X15	S	*115,00*	*155,00*	*155,20*	*15,00*	32
		4.528	6.102	6.110	.591	
*115X159X14	S	*115,00*	*158,70*	*159,00*	*14,00*	32
		4.528	6.248	6.260	.551	
*115X160X15	S	*115,00*	*160,00*	*160,20*	*15,00*	32
		4.528	6.299	6.307	.591	
*115X146.5X13	S	*115,00*	*146,20*	*146,50*	*13,00*	32
		4.528	5.756	5.768	.512	
*116X132X12	S	*116,00*	*131,70*	*132,00*	*12,00*	32
		4.567	5.185	5.197	.472	
*120X140X12	S	*120,00*	*139,70*	*140,00*	*12,00*	32
		4.724	5.500	5.512	.472	
*120X140X15	S	*120,00*	*139,70*	*140,00*	*15,00*	32
		4.724	5.500	5.512	.591	
120X140X13	S	*120,00*	*140,00*	*140,28*	*13,00*	32
		4.724	5.512	5.523	.512	
120X145X12	S	*120,00*	*145,00*	*145,28*	*12,00*	35
		4.724	5.709	5.720	.472	
*120X146X13	S	*120,00*	*145,70*	*146,00*	*13,00*	32
		4.724	5.736	5.748	.512	
*120X150X13	S	*120,00*	*149,70*	*150,00*	*13,00*	32
		4.724	5.894	5.906	.512	
*120X150X14	S	*120,00*	*149,70*	*150,00*	*14,00*	32
		4.724	5.894	5.906	.551	
*120X150X15	S	*120,00*	*149,70*	*150,00*	*15,00*	32
		4.724	5.894	5.906	.591	
120X150X12	S	*120,00*	*150,00*	*150,28*	*12,00*	32
		4.724	5.906	5.917	.472	
*120X150X12V	V	*120,00*	*150,00*	*150,20*	*12,00*	32
		4.724	5.906	5.913	.472	
*120X155X14	S	*120,00*	*154,70*	*155,00*	*14,00*	32
		4.724	6.090	6.102	.551	
*120X155X16	S	*120,00*	*154,70*	*155,00*	*16,00*	32
		4.724	6.090	6.102	.630	

For Illustration and Material Data See Technical Section

⬅➡ Hydrodynamic Lip Design-Bidirectional

* The U.S. customer service number is 877-4-TIMKEN. The Canadian customer service numbers are 800-565-4927 (English) and 800-565-0438 (French-Canadian).

METRIC SERIES (cont.)

Part No.	Lip Mat'l	Shaft Size	Hsg. Bore	Seal O.D.	Seal Width	Type/ Illus.
* 120X155X15	S	120,00	155,00	155,20	15,00	32
		4.724	6.102	6.110	.591	
* 120X159X14	S	120,00	158,70	159,00	14,00	32
		4.724	6.248	6.260	.551	
* 120X160X15	S	120,00	159,70	160,00	15,00	32
		4.724	6.287	6.299	.591	
120X160X12	S	120,00	160,00	160,28	12,00	32
		4.724	6.299	6.310	.472	
* 120X160X12V	V	120,00	160,00	160,20	12,00	35
		4.724	6.299	6.307	.472	
* 120X180X15	S	120,00	179,67	180,00	15,00	32
		4.724	7.074	7.087	.591	
* 120X146.5X13	S	120,00	146,20	146,50	13,00	32
		4.724	5.756	5.768	.512	
* 122X140X13	S	122,00	139,70	140,00	13,00	32
		4.803	5.500	5.512	.512	
* 124X159X14	S	124,00	158,70	159,00	14,00	32
		4.882	6.248	6.260	.551	
* 124X170X14.5	S	124,00	169,70	170,00	14,50	32
		4.882	6.681	6.693	.571	
* 125X145X13	S	125,00	144,70	145,00	13,00	32
		4.921	5.697	5.709	.512	
* 125X150X13	S	125,00	149,70	150,00	13,00	32
		4.921	5.894	5.906	.512	
* 125X150X14	S	125,00	149,70	150,00	14,00	32
		4.921	5.894	5.906	.551	
* 125X150X15	S	125,00	149,70	150,00	15,00	32
		4.921	5.894	5.906	.591	
125X150X12	S	125,00	150,00	150,28	12,00	32
		4.921	5.906	5.917	.472	
* 125X150X12V	V	125,00	150,00	150,20	12,00	32
		4.921	5.906	5.913	.472	
* 125X155X14	S	125,00	154,70	155,00	14,00	32
		4.921	6.090	6.102	.551	
125X155X12	S	125,00	155,00	155,20	12,00	32
		4.921	6.102	6.110	.472	
* 125X155X15	S	125,00	155,00	155,20	15,00	32
		4.921	6.102	6.110	.591	
* 125X160X15	S	125,00	159,70	160,00	15,00	32
		4.921	6.287	6.299	.591	
125X160X12	S	125,00	160,00	160,28	12,00	32
		4.921	6.299	6.310	.472	
125X170X15	S	125,00	170,00	170,20	15,00	32
		4.921	6.693	6.701	.591	
* 125X146.5X13	S	125,00	146,20	146,50	13,00	32
		4.921	5.756	5.768	.512	
* 128X150X15	S	128,00	150,00	150,28	15,00	35
		5.039	5.906	5.917	.591	
* 130X150X12	S	130,00	149,70	150,00	12,00	32
		5.118	5.894	5.906	.472	
* 130X150X13	S	130,00	149,70	150,00	13,00	32
		5.118	5.894	5.906	.512	
130X150X10	S	130,00	150,00	150,10	10,00	47
		5.118	5.906	5.909	.394	
* 130X150X15	S	130,00	150,00	150,20	15,00	32
		5.118	5.906	5.913	.591	
* 130X155X14	S	130,00	154,70	155,00	14,00	32
		5.118	6.090	6.102	.551	
* 130X160X13	S	130,00	159,70	160,00	13,00	32
		5.118	6.287	6.299	.512	
* 130X160X14	S	130,00	159,70	160,00	14,00	32
		5.118	6.287	6.299	.551	
130X160X12	S	130,00	160,00	160,28	12,00	32
		5.118	6.299	6.310	.472	
* 130X160X12V	V	130,00	160,00	160,20	12,00	32
		5.118	6.299	6.307	.472	
130X160X15	S	130,00	160,00	160,20	15,00	32
		5.118	6.299	6.307	.591	
* 130X165X13	S	130,00	164,70	165,00	13,00	32
		5.118	6.484	6.496	.512	

METRIC SERIES (cont.)

Part No.	Lip Mat'l	Shaft Size	Hsg. Bore	Seal O.D.	Seal Width	Type/ Illus.
* 130X165X15	S	130,00	164,70	165,00	15,00	32
		5.118	6.484	6.496	.591	
* 130X170X13	S	130,00	169,70	170,00	13,00	32
		5.118	6.681	6.693	.512	
130X170X12	S	130,00	170,00	170,30	12,00	35
		5.118	6.693	6.705	.472	
* 130X170X12V	V	130,00	170,00	170,20	12,00	35
		5.118	6.693	6.701	.472	
130X170X15	S	130,00	170,00	170,28	15,00	32
		5.118	6.693	6.704	.591	
* 130X190X12	S	130,00	189,67	190,00	12,00	32
		5.118	7.467	7.480	.472	
* 130X200X12	S	130,00	199,67	200,00	12,00	32
		5.118	7.861	7.874	.472	
* 135X155X13	S	135,00	154,70	155,00	13,00	32
		5.315	6.090	6.102	.512	
* 135X160X15	S	135,00	159,70	160,00	15,00	32
		5.315	6.287	6.299	.591	
135X160X13	S	135,00	160,00	160,38	13,00	35
		5.315	6.299	6.314	.512	
* 135X165X13	S	135,00	164,70	165,00	13,00	32
		5.315	6.484	6.496	.512	
* 135X165X14	S	135,00	164,70	165,00	14,00	32
		5.315	6.484	6.496	.551	
135X170X12	S	135,00	170,00	170,38	12,00	35
		5.315	6.693	6.708	.472	
138X152X12	S	138,00	152,00	152,10	12,00	47
		5.433	5.984	5.988	.472	
* 138X152X15	S	138,00	152,00	152,20	15,00	32
		5.433	5.984	5.992	.591	
* 140X160X14	S	140,00	159,70	160,00	14,00	32
		5.512	6.287	6.299	.551	
140X160X12	S	140,00	160,00	160,20	12,00	32
		5.512	6.299	6.307	.472	
140X160X13	S	140,00	160,00	160,27	13,00	35
		5.512	6.299	6.310	.512	
* 140X165X13	S	140,00	164,70	165,00	13,00	32
		5.512	6.484	6.496	.512	
* 140X165X15	S	140,00	165,00	165,28	15,00	32
		5.512	6.496	6.507	.591	
* 140X168X15	S	140,00	167,70	168,00	15,00	32
		5.512	6.602	6.614	.591	
* 140X170X13	S	140,00	169,70	170,00	13,00	32
		5.512	6.681	6.693	.512	
* 140X170X14	S	140,00	169,70	170,00	14,00	32
		5.512	6.681	6.693	.551	
140X170X12	S	140,00	170,00	170,30	12,00	32
		5.512	6.693	6.705	.472	
* 140X170X12V	V	140,00	170,00	170,20	12,00	32
		5.512	6.693	6.701	.472	
140X170X15	S	140,00	170,00	170,43	15,00	32
		5.512	6.693	6.710	.591	
* 140X175X15	S	140,00	174,70	175,00	15,00	32
		5.512	6.878	6.890	.591	
* 140X180X15	S	140,00	179,67	180,00	15,00	32
		5.512	7.074	7.087	.591	
140X180X12	S	140,00	180,00	180,30	12,00	35
		5.512	7.087	7.098	.472	
140X180X18	S	140,00	180,00	180,38	18,00	32
		5.512	7.087	7.102	.709	
* 140X185X16	S	140,00	184,67	185,00	16,00	32
		5.512	7.270	7.283	.630	
* 142X157X10	S	142,00	156,70	157,00	10,00	32
		5.591	6.169	6.181	.394	
144X160X12	S	144,00	160,00	160,25	12,00	35
		5.669	6.299	6.309	.472	
145X164X14	S	145,00	164,00	164,10	14,00	47
		5.709	6.457	6.461	.551	
* 145X164X15	S	145,00	164,00	164,20	15,00	32
		5.709	6.457	6.465	.591	

For Illustration and Material Data See Technical Section

* The U.S. customer service number is 877-4-TIMKEN. The Canadian customer service numbers are 800-565-4927 (English) and 800-565-0438 (French-Canadian).

METRIC SERIES (cont.)

Part No.	Lip Mat'l	Shaft Size	Hsg. Bore	Seal O.D.	Seal Width	Type/ Illus.
*145X165X13	S	*145,00*	*164,70*	*165,00*	*13,00*	32
		5.709	6.484	6.496	.512	
*145X165X14	S	*145,00*	*164,70*	*165,00*	*14,00*	32
		5.709	6.484	6.496	.551	
*145X167X13	S	*145,00*	*166,70*	*167,00*	*13,00*	32
		5.709	6.563	6.575	.512	
*145X170X13	S	*145,00*	*169,70*	*170,00*	*13,00*	32
		5.709	6.681	6.693	.512	
*145X170X15	S	*145,00*	*169,70*	*170,00*	*15,00*	32
		5.709	6.681	6.693	.591	
145X170X12	S	*145,00*	*170,00*	*170,45*	*12,00*	32
		5.709	6.693	6.711	.472	
*145X175X13	S	*145,00*	*174,70*	*175,00*	*13,00*	32
		5.709	6.878	6.890	.512	
*145X175X14	S	*145,00*	*174,70*	*175,00*	*14,00*	32
		5.709	6.878	6.890	.551	
145X175X15	S	*145,00*	*175,00*	*175,38*	*15,00*	32
		5.709	6.890	6.905	.591	
145X180X12	S	*145,00*	*180,00*	*180,28*	*12,00*	35
		5.709	7.087	7.098	.472	
148X170X15	S	*148,00*	*170,00*	*170,28*	*15,00*	35
		5.827	6.693	6.704	.591	
*150X168X13	S	*150,00*	*167,70*	*168,00*	*13,00*	32
		5.906	6.602	6.614	.512	
*150X170X15	S	*150,00*	*169,70*	*170,00*	*15,00*	32
		5.906	6.681	6.693	.591	
*150X175X10	S	*150,00*	*174,70*	*175,00*	*10,00*	32
		5.906	6.878	6.890	.394	
*150X180X13	S	*150,00*	*179,67*	*180,00*	*13,00*	32
		5.906	7.074	7.087	.512	
*150X180X14	S	*150,00*	*179,67*	*180,00*	*14,00*	32
		5.906	7.074	7.087	.551	
150X180X12	S	*150,00*	*180,00*	*180,35*	*12,00*	32
		5.906	7.087	7.100	.472	
150X180X15	S	*150,00*	*180,00*	*180,35*	*15,00*	35
		5.906	7.087	7.100	.591	
*150X180X15V	V	*150,00*	*180,00*	*180,20*	*15,00*	32
		5.906	7.087	7.094	.591	
*150X185X16	S	*150,00*	*184,67*	*185,00*	*16,00*	32
		5.906	7.270	7.283	.630	
*150X190X15	S	*150,00*	*189,67*	*190,00*	*15,00*	32
		5.906	7.467	7.480	.591	
*150X200X13	S	*150,00*	*199,67*	*200,00*	*13,00*	32
		5.906	7.861	7.874	.512	
*150X210X15	S	*150,00*	*209,67*	*210,00*	*15,00*	32
		5.906	8.255	8.268	.591	
*150X225X12	S	*150,00*	*224,67*	*225,00*	*12,00*	32
		5.906	8.845	8.858	.472	
*154X172X14	S	*154,00*	*171,70*	*172,00*	*14,00*	32
		6.063	6.760	6.772	.551	
*154X172X15	S	*154,00*	*172,00*	*172,20*	*15,00*	32
		6.063	6.772	6.780	.591	
*155X172X14	S	*155,00*	*171,70*	*172,00*	*14,00*	32
		6.102	6.760	6.772	.551	
*155X174X12	S	*155,00*	*173,70*	*174,00*	*12,00*	32
		6.102	6.838	6.850	.472	
*155X180X12	S	*155,00*	*179,67*	*180,00*	*12,00*	32
		6.102	7.074	7.087	.472	
*155X180X13	S	*155,00*	*179,67*	*180,00*	*13,00*	32
		6.102	7.074	7.087	.512	
155X180X15	S	*155,00*	*180,00*	*180,23*	*15,00*	32
		6.102	7.087	7.096	.591	
*155X185X16	S	*155,00*	*184,67*	*185,00*	*16,00*	32
		6.102	7.270	7.283	.630	
*160X180X10	S	*160,00*	*179,67*	*180,00*	*10,00*	32
		6.299	7.074	7.087	.394	
*160X180X13	S	*160,00*	*179,67*	*180,00*	*13,00*	32
		6.299	7.074	7.087	.512	
*160X182X18	S	*160,00*	*181,67*	*182,00*	*18,00*	32
		6.299	7.152	7.165	.709	

METRIC SERIES (cont.)

Part No.	Lip Mat'l	Shaft Size	Hsg. Bore	Seal O.D.	Seal Width	Type/ Illus.
*160X185X13	S	*160,00*	*184,67*	*185,00*	*13,00*	32
		6.299	7.270	7.283	.512	
160X185X10	S	*160,00*	*185,00*	*185,35*	*10,00*	35
		6.299	7.283	7.297	.394	
*160X185X10V	V	*160,00*	*185,00*	*185,20*	*10,00*	35
		6.299	7.283	7.291	.394	
*160X190X13	S	*160,00*	*189,67*	*190,00*	*13,00*	32
		6.299	7.467	7.480	.512	
160X190X15	S	*160,00*	*190,00*	*190,35*	*15,00*	32
		6.299	7.480	7.494	.591	
*160X190X15V	V	*160,00*	*190,00*	*190,20*	*15,00*	32
		6.299	7.480	7.488	.591	
*160X200X14	S	*160,00*	*199,67*	*200,00*	*14,00*	32
		6.299	7.861	7.874	.551	
160X200X12	S	*160,00*	*200,00*	*200,20*	*12,00*	32
		6.299	7.874	7.882	.472	
160X200X15	S	*160,00*	*200,00*	*200,20*	*15,00*	32
		6.299	7.874	7.882	.591	
*160X240X15	S	*160,00*	*239,67*	*240,00*	*15,00*	32
		6.299	9.436	9.449	.591	
*162X200X15	S	*162,00*	*200,00*	*200,20*	*15,00*	32
		6.378	7.874	7.882	.591	
*165X190X14	S	*165,00*	*189,67*	*190,00*	*14,00*	32
		6.496	7.467	7.480	.551	
*165X190X15	S	*165,00*	*189,67*	*190,00*	*15,00*	32
		6.496	7.467	7.480	.591	
165X190X13	S	*165,00*	*190,00*	*190,35*	*13,00*	41
		6.496	7.480	7.494	.512	
*165X195X15	S	*165,00*	*194,67*	*195,00*	*15,00*	32
		6.496	7.664	7.677	.591	
*165X200X14	S	*165,00*	*199,67*	*200,00*	*14,00*	32
		6.496	7.861	7.874	.551	
*170X190X10	S	*170,00*	*189,67*	*190,00*	*10,00*	32
		6.693	7.467	7.480	.394	
*170X190X14	S	*170,00*	*189,67*	*190,00*	*14,00*	32
		6.693	7.467	7.480	.551	
170X200X15	S	*170,00*	*200,00*	*200,35*	*15,00*	32
		6.693	7.874	7.888	.591	
170X210X15	S	*170,00*	*210,00*	*210,20*	*15,00*	32
		6.693	8.268	8.276	.591	
175X200X15	S	*175,00*	*200,00*	*200,35*	*15,00*	32
		6.890	7.874	7.888	.591	
*175X210X15	S	*175,00*	*209,67*	*210,00*	*15,00*	32
		6.890	8.255	8.268	.591	
*175X230X20	S	*175,00*	*229,67*	*230,00*	*20,00*	32
		6.890	9.042	9.055	.787	
*180X200X14	S	*180,00*	*199,67*	*200,00*	*14,00*	32
		7.087	7.861	7.874	.551	
*180X200X15	S	*180,00*	*199,67*	*200,00*	*15,00*	32
		7.087	7.861	7.874	.591	
180X210X15	S	*180,00*	*210,00*	*210,35*	*15,00*	32
		7.087	8.268	8.281	.591	
*180X215X15	S	*180,00*	*214,67*	*215,00*	*15,00*	32
		7.087	8.452	8.465	.591	
*180X220X15	S	*180,00*	*219,67*	*220,00*	*15,00*	32
		7.087	8.648	8.661	.591	
*180X220X16	S	*180,00*	*219,67*	*220,00*	*16,00*	32
		7.087	8.648	8.661	.630	
*185X210X15	S	*185,00*	*209,67*	*210,00*	*15,00*	32
		7.283	8.255	8.268	.591	
185X210X13	S	*185,00*	*210,00*	*210,35*	*13,00*	35
		7.283	8.268	8.281	.512	
*185X215X16	S	*185,00*	*215,00*	*215,22*	*16,00*	32
		7.283	8.465	8.473	.630	
*190X210X10	S	*190,00*	*209,67*	*210,00*	*10,00*	32
		7.480	8.255	8.268	.394	
*190X210X15	S	*190,00*	*209,67*	*210,00*	*15,00*	32
		7.480	8.255	8.268	.591	
*190X220X15	S	*190,00*	*220,00*	*220,35*	*15,00*	32
		7.480	8.661	8.675	.591	

For Illustration and Material Data See Technical Section

* The U.S. customer service number is 877-4-TIMKEN. The Canadian customer service numbers are 800-565-4927 (English) and 800-565-0438 (French-Canadian).

METRIC SERIES (cont.)

Part No.	Lip Mat'l	Shaft Size	Hsg. Bore	Seal O.D.	Seal Width	Type/ Illus.
190X220X16	S	190,00	220,00	220,35	16,00	32
		7.480	8.661	8.675	.630	
* 190X225X12	S	190,00	224,67	225,00	12,00	32
		7.480	8.845	8.858	.472	
* 190X225X16	S	190,00	224,67	225,00	16,00	32
		7.480	8.845	8.858	.630	
* 190X225X16V	V	190,00	225,00	225,20	16,00	32
		7.480	8.858	8.866	.630	
* 190X230X15	S	190,00	229,67	230,00	15,00	32
		7.480	9.042	9.055	.591	
190X230X16	S	190,00	230,00	230,20	16,00	32
		7.480	9.055	9.063	.630	
* 195X230X16	S	195,00	229,67	230,00	16,00	32
		7.677	9.042	9.055	.630	
* 195X230X20	S	195,00	229,67	230,00	20,00	32
		7.677	9.042	9.055	.787	
* 200X230X13	S	200,00	229,67	230,00	13,00	32
		7.874	9.042	9.055	.512	
200X230X15	S	200,00	230,00	230,35	15,00	32
		7.874	9.055	9.069	.591	
* 200X230X15V	V	200,00	230,00	230,20	15,00	32
		7.874	9.055	9.063	.591	
* 200X235X15	S	200,00	234,67	235,00	15,00	32
		7.874	9.239	9.252	.591	
* 200X240X15	S	200,00	239,67	240,00	15,00	32
		7.874	9.436	9.449	.591	
* 200X240X20	S	200,00	239,67	240,00	20,00	32
		7.874	9.436	9.449	.787	
* 200X250X16	S	200,00	249,67	250,00	16,00	32
		7.874	9.830	9.843	.630	
* 200X250X20	S	200,00	249,67	250,00	20,00	32
		7.874	9.830	9.843	.787	
* 205X225X18	S	205,00	224,67	225,00	18,00	32
		8.071	8.845	8.858	.709	
* 205X235X18	S	205,00	234,67	235,00	18,00	32
		8.071	9.239	9.252	.709	
210X240X15	S	210,00	240,00	240,35	15,00	35
		8.268	9.449	9.463	.591	
* 210X250X16	S	210,00	249,67	250,00	16,00	32
		8.268	9.830	9.843	.630	
210X250X15	S	210,00	250,00	250,20	15,00	32
		8.268	9.843	9.850	.591	
* 210X270X16	S	210,00	269,67	270,00	16,00	32
		8.268	10.617	10.630	.630	
220X250X15	S	220,00	250,00	250,35	15,00	32
		8.661	9.843	9.856	.591	
* 220X250X15V	V	220,00	250,00	250,20	15,00	35
		8.661	9.843	9.850	.591	
* 220X255X16	S	220,00	254,67	255,00	16,00	32
		8.661	10.026	10.039	.630	
* 220X260X14	S	220,00	259,67	260,00	14,00	32
		8.661	10.223	10.236	.551	
* 220X260X16	S	220,00	259,67	260,00	16,00	32
		8.661	10.223	10.236	.630	
* 220X260X15	S	220,00	260,00	260,20	15,00	32
		8.661	10.236	10.244	.591	
* 222X245X13	S	222,00	244,67	245,00	13,00	32
		8.740	9.633	9.646	.512	
230X260X15	S	230,00	260,00	260,35	15,00	35
		9.055	10.236	10.250	.591	
240X270X15	S	240,00	270,00	270,35	15,00	35
		9.449	10.630	10.644	.591	
* 240X270X16	S	240,00	270,00	270,35	16,00	35
		9.449	10.630	10.644	.630	
* 240X280X18	S	240,00	279,67	280,00	18,00	32
		9.449	11.011	11.024	.709	
* 240X280X20	S	240,00	279,67	280,00	20,00	32
		9.449	11.011	11.024	.787	
240X280X16	S	240,00	280,00	280,20	16,00	32
		9.449	11.024	11.031	.630	

METRIC SERIES (cont.)

Part No.	Lip Mat'l	Shaft Size	Hsg. Bore	Seal O.D.	Seal Width	Type/ Illus.
* 250X280X15	S	250,00	280,00	280,35	15,00	35
		9.843	11.024	11.037	.591	
* 250X290X15	S	250,00	289,67	290,00	15,00	32
		9.843	11.404	11.417	.591	
* 260X290X15	S	260,00	289,67	290,00	15,00	32
		10.236	11.404	11.417	.591	
* 260X300X20	S	260,00	300,00	300,45	20,00	32
		10.236	11.811	11.829	.787	
* 265X290X16	S	265,00	289,67	290,00	16,00	32
		10.433	11.404	11.417	.630	
* 270X310X16	S	270,00	310,00	310,45	16,00	35
		10.630	12.205	12.222	.630	
280X320X20	S	280,00	320,00	320,45	20,00	32
		11.024	12.598	12.616	.787	
* 285X320X20	S	285,00	319,67	320,00	20,00	32
		11.220	12.585	12.598	.787	
* 290X330X18	S	290,00	329,67	330,00	18,00	32
		11.417	12.979	12.992	.709	
300X340X20	S	300,00	340,00	340,45	20,00	32
		11.811	13.386	13.404	.787	
* 320X360X20	S	320,00	360,00	360,45	20,00	32
		12.598	14.173	14.191	.787	
* 340X380X20	S	340,00	380,00	380,45	20,00	32
		13.386	14.961	14.978	.787	
* 360X400X20	S	360,00	400,00	400,45	20,00	32
		14.173	15.748	15.766	.787	
* 380X420X20	S	380,00	420,00	420,45	20,00	32
		14.961	16.535	16.553	.787	
* 400X440X20	S	400,00	440,00	440,45	20,00	32
		15.748	17.323	17.341	.787	

FELT SEALS

5M81	F	1.938	–	2.875	.375	#
5M89	F	2.500	–	3.438	.313	#
5M289	F	2.000	–	2.750	.438	#
5M293	F	1.938	–	3.000	.375	#
5M356	F	2.000	–	3.125	.375	#
5M403	F	2.000	–	3.125	.500	#
* 5M445	F	1.750	–	2.438	.313	#
5M466	F	6.438	–	7.563	.500	#
5M497	F	4.125	–	5.750	.438	#
5M544	F	4.875	–	5.625	.375	#
5M559	F	2.813	–	3.563	.313	#
5M643	F	3.250	–	4.063	.313	#
5MR71	F	2.188	–	3.063	.250	#
5MR1008	F	2.688	–	3.500	.219	#
5MR1009	F	2.937	–	3.812	.313	#
5MR1300	F	.938	–	1.500	.375	#
5MR1301	F	3.344	–	3.875	.281	#

For Illustration and Material Data See Technical Section

Designed For A Specific Application - Not Recommended For General Use

* The U.S. customer service number is 877-4-TIMKEN. The Canadian customer service numbers are 800-565-4927 (English) and 800-565-0438 (French-Canadian).

Kit Dimensions				Seal Dimensions						
Kit No.	Shaft	O.D.	Width	Seal No.	Type/ Illus.	Lip Mat'l	Shaft	O.D.	Width	Remarks
PSK-1	1.250	1.756	–	**SR2**	–	–	–	–	–	(Kit)
				(2) **SW2**	–	–	–	–	–	
				5683++	32	S	1.250	1.756	.300	
				5684++	32	S	1.250	1.756	.399	
5000	1.763	2.416	.563	–	–	–	–	–	–	
5001	1.875	2.565	.563	–	–	–	–	–	–	
5008	4.642	5.756	.750	**455053**	45	S	4.750	5.757	.562	Contains• JX847 Wear Sleeve
* **5010**	4.750	6.006	.750	•**476621H**	47	H	4.875	6.006	.562	Contains• J1135 Wear Sleeve
5015	3.010	8.250	.571	•**8369S**	#	S	3.125	–	.571	Contains• G48 Gasket &• JV495 Wear Sleeve & (2) • G523 Gasket
5026	6.000	6.757	.750	•**336665H**	33	H	6.125	6.757	.375	Contains• J1141 Wear Sleeve
5028	3.930	5.381	.875	•**9586**	#	S	4.062	5.378	.627	Contains• JV1511A Wear Sleeve
5033	4.834	5.756	.710	•**3492**	48	T	5.000	5.756	.500	Contains• JX2162 Wear Sleeve
5039	5.991	6.757	.500	•**4165V**⬅	#	V	6.107	6.757	.500	Contains• JV2088 Wear Sleeve
5045	2.496	3.758	.625	•**200851**%	200E	S	2.496	3.772	.315	Contains• JV1582 Wear Sleeve
5065	3.994	5.005	.625	•**455134H**	45	H	4.125	5.005	.468	Contains• J1129 Wear Sleeve
5066	2.377	3.505	.937	•**3894V**	48	V	2.500	3.505	.500	Contains• JX1920 Wear Sleeve Seal & Sleeve
5068	–	–	–	–	–	–	–	–	–	(Split Seal)
5071	1.500	2.570	.550	•**200861**%	200E	S	1.500	2.482	.290	Contains• JV933 Wear Sleeve
5072	2.625	3.480	.380	–	–	–	–	–	–	
5073	–	–	–	–	–	–	–	–	–	Contains (2) G753 Gasket
5075	4.500	6.259	.862	•**9588**&	#	S	4.625	6.257	.550	Contains• JV1513 Wear Sleeve
5076	3.937	5.678	.875	•**9586**	#	S	4.062	5.378	.627	Contains• JV1511 Wear Sleeve
5077	4.375	6.259	.843	•**9587**&	#	S	4.500	6.257	.820	Contains• JV1512 Wear Sleeve
5079	3.110	5.750	.375	•**7896S**	51	S	3.110	5.750	.375	
* **5082**	5.180	6.507	.750	•**456986H**	45	H	5.312	6.507	.625	Contains• J2037 Wear Sleeve
5084	3.750	4.756	.625	–	–	–	–	–	–	
5089	3.937	5.509	.597	•**2155**⬅➡	#	S	4.062	5.509	.597	Contains• JV1511 Wear Sleeve
5092	–	3.030	.325	–	–	–	–	–	–	(Split Seal)
5095	3.438	4.012	.410	–	–	–	–	–	–	(Rope Type)
5100	3.112	4.633	.920	•**9583**⬅➡	#	S	3.250	4.633	.706	Contains• JV1508 Wear Sleeve
5106	–	–	–	–	–	–	–	–	–	Split Seal
5108	–	4.200	.222	–	–	–	–	–	–	(Split Seal)
5111	–	–	–	–	–	–	–	–	–	(Split Seal)
5112	–	–	–	–	–	–	–	–	–	(Split Seal)
5116	–	4.000	.187	–	–	–	–	–	–	(Split Seal)
5117	3.438	4.313	.188	–	–	–	–	–	–	(Split Seal)
5118	–	–	–	–	–	–	–	–	–	(Split Seal)
5120	3.125	4.130	.625	•**415566N**	41	N	3.250	4.130	.562	Contains• J1122 Wear Sleeve
5146	5.500	6.631	.875	•**415487**	41	S	5.625	6.631	.625	Contains• JV1463 Wear Sleeve
5147	2.625	3.755	.625	•**200919**%	200E	S	2.625	3.960	.320	Contains• JV1517 Wear Sleeve
5160	2.250	3.256	.625	•**412038**	41	S	2.375	3.256	.437	Contains• J1113 Wear Sleeve &• JV1836 Wear Sleeve
5161	2.000	3.376	.625	•**410972**	41	S	2.125	3.376	.468	Contains• J1109 Wear Sleeve &• JV1837 Wear Sleeve
5163	2.835	3.425	.230	–	–	–	–	–	–	
5164	6.875	8.633	.825	•**3123**	#	S	6.956	8.633	.750	
				•**3124**%	46	S	6.875	8.543	.825	
5166	1.250	2.254	.750	•**410169**	41	S	1.375	2.254	.500	Contains• JV1873 Wear Sleeve
5167	3.625	4.756	.875	•**475379**	47	S	3.750	4.756	.500	Contains• JV1874 Wear Sleeve
5168	1.062	2.129	.625	•**413293**	41	S	1.187	2.129	.375	Contains• JV1872 Wear Sleeve
5169	3.250	4.254	.750	•**476028**	47	S	3.375	4.254	.468	Contains• JV1875 Wear Sleeve
5170	4.062	5.506	.875	•**415039**	41	S	4.187	5.506	.562	Contains• JV1473 Wear Sleeve
* **5172**	2.000	5.880	.458	•**6959**	#	S	2.375	5.880	.331	Contains• K251 Wiper &• G895A Gasket
5175	9.265	11.385	.990	•**455871V**	45	V	9.375	11.385	.750	Contains• JV829 Wear Sleeve
5185	3.125	8.250	.571	–	–	–	–	–	–	
5188	2.000	3.376	.625	•**410972N**	41	N	2.125	3.376	.468	Contains• J1109 Wear Sleeve &• JV1837 Wear Sleeve
5189	2.250	3.256	.625	•**412038N**	41	N	2.375	3.256	.437	Contains• J1113 Wear Sleeve &• JV1836 Wear Sleeve
5199	5.000	6.131	.875	•**8971H**	7S	H	5.125	6.131	.750	Contains• JX1831 Wear Sleeve
5200	1.502	2.381	.940	•**9613S**⬅	71	S	1.500	2.381	.470	Contains• RP 356 Bushing (Seal & Bushing Kit)
5201	1.500	2.378	1.500	•**470059**	47	S	1.500	2.378	.500	Contains• RP 605 Bushing (Seal & Bushing Kit)
5202	1.500	2.378	1.500	•**7692S**⬅	79	S	1.500	2.376	1.458	Contains• RP 605 Bushing (Seal & Bushing Kit)
5203	1.689	2.850	2.120	•**7300S**⬅	79	N	1.685	2.506	1.250	Contains• RP 661 Bushing (Seal & Bushing Kit)
5204	1.376	2.254	1.370	•**7495S**	61	S	1.375	2.254	.713	Contains• RP 691 Bushing (Seal & Bushing Kit)
5205	1.688	2.687	1.240	•**7038SA**⬅	41	S	1.687	2.506	.582	Contains RP 717 Bushing (Seal & Bushing Kit)
5206	1.688	2.850	2.120	•**7300S**⬅	79	N	1.685	2.506	1.250	Contains• RP 546 Bushing (Seal & Bushing Kit)
5207	1.566	2.515	1.370	•**8935S**&	79	S	1.558	2.254	1.520	Contains• RP 553 Bushing (Seal & Bushing Kit)
5208	1.887	1.998	1.000	•**9449**⬅	74	S	1.890	2.704	.582	Contains RP775 Bushing (Seal & Bushing Kit)
5227	9.375	11.383	.825	•**3502**	45	S	9.477	11.383	.750	
				•**3503**%	#	S	9.375	11.273	.825	
5228	5.875	7.008	.875	•**456055V**	45	V	6.000	7.008	.625	Contains• JX1002 Wear Sleeve
5229	4.993	6.131	.750	•**416172**	41	S	5.125	6.131	.562	Contains• J1137 Wear Sleeve
5273	2.991	3.637	.385	•**100202T**⬅	FW-H	T	2.991	3.637	.385	(Teflon®)
5274	3.740	4.540	.492	•**100203T**⬅	FW-H	T	3.740	4.540	.492	Contains 733215 Gasket (Teflon®)
5276	7.369	9.010	.875	•**415551**	41	S	7.500	9.010	.750	Contains• JV1190 Wear Sleeve
5277	3.625	4.256	.390	•**100204T**⬅	FW-H	T	3.625	4.256	.390	(Teflon®)

Designed For A Specific Application - Not Recommended For General Use ⬅ Hydrodynamic Lip Design-CCW ⬅➡ Hydrodynamic Lip Design-Bidirectional
++ Not Sold Separately % External Bore & Flanged O.D.
* The U.S. customer service number is 877-4-TIMKEN. The Canadian customer service numbers are 800-565-4927 (English) and 800-565-0438 (French-Canadian).
• Sold Separately

	Kit Dimensions						Seal Dimensions			
Kit No.	Shaft	O.D.	Width	Seal No.	Type/ Illus.	Lip Mat'l	Shaft	O.D.	Width	Remarks
5278	3.750	4.506	.362	•**100205T**⬅	FW-H	T	3.750	4.506	.362	(Teflon®)
5279	3.583	4.375	.394	•**100052T**⬅	FW-H	T	3.583	4.375	.394	Contains 731414 Gasket (Teflon®)
5287	3.465	4.266	.437	•**100239T**⬅	FW-H	T	3.465	4.266	.437	Contains 732079 Gasket &• 733419 Gasket & 734280 Gasket (Teflon®)
5290	2.988	3.740	1.165	–	–	–	–	–	–	
5302	1.750	3.376	.667	•**8398**	39	S	1.937	3.376	.667	Contains• K259 Wiper
5313	3.010	8.250	.571	•**8369S**	#	S	3.125	–	.571	Contains• K282 Wiper & (2) • G523 Gasket
5327	3.500	6.625	.531	•**6245S**	#	S	3.500	6.625	.531	Contains (2) • G35 Gasket
5329	2.000	4.562	.562	**6465B**++	#	F	2.000	4.562	.562	Contains (2) G33 Gasket
5330	2.000	4.562	.562	•**6469**	#	F	2.000	4.562	.562	Contains (2) • G34 Gasket
5331	1.562	2.506	.500	•**450185**	45	S	1.562	2.506	.500	Contains• G199 Gasket
5332	2.187	3.194	.437	**450354**	45	S	2.187	3.194	.437	Contains• G25 Gasket
5336	1.875	2.762	.500	•**410283**	41	S	1.875	2.762	.500	Contains• G736 Gasket
5346	1.062	1.507	.250	•**340210**	34	S	1.062	1.507	.250	Contains (2) • 666215 'O' Ring &• 666232 'O' Ring &• 666334 'O' Ring
5347	3.562	4.630	.700	•**8480**	#	S	3.557	4.530	.320	Contains• JV1170 Wear Sleeve
5361	1.875	3.130	.625	•**450310N**	45	N	2.000	3.130	.500	Contains• J1107 Wear Sleeve
5364	1.766	3.005	.875	•**451139**	45	S	1.875	3.005	.375	Contains• JX825 Wear Sleeve
5373	3.250	4.254	.625	•**416294N**	41	N	3.375	4.254	.500	Contains• J1123 Wear Sleeve
5376	4.000	5.004	.625	•**415134N**	41	N	4.125	5.004	.468	Contains• J1129 Wear Sleeve
5377	4.750	6.256	.750	•**415068N**	41	N	4.875	6.256	.562	Contains• J1135 Wear Sleeve
5381	3.250	5.004	.625	•**415025**	41	S	3.375	5.004	.468	Contains• J1123 Wear Sleeve
5382	3.250	4.254	.625	•**415613**	41	S	3.375	4.254	.625	Contains• J1123 Wear Sleeve
5383	5.625	6.632	1.000	**455447**	45	S	5.750	6.632	.625	Contains• J1355 Wear Sleeve
5384	2.531	6.125	.500	•**7154S**	#	S	2.531	6.125	.500	Contains• G41 Gasket
5388	1.875	2.690	.625	**450360**	45	S	2.000	2.690	.500	Contains• J1107 Wear Sleeve
5390	–	6.600	.430	–	–	–	–	–	–	Contains (2) • G214 Gasket & (2) • G594 Gasket
5397	2.121	3.350	.500	•**9434**%	46	S	2.121	3.296	.460	
				•**482435**	48	S	2.172	3.350	.500	
5399	2.812	4.504	1.000	•**415356**	41	S	2.937	4.504	.468	Contains• JV1427 Wear Sleeve
5401	2.500	6.125	.435	•**7512S**	51	S	2.500	6.125	.400	Contains (2) • G41 Gasket &• G43 Gasket &• JV1304 Wear Sleeve
5403	2.860	6.562	.571	•**6479**	#	S	2.860	6.460	.520	Contains• J493 Wear Sleeve
5405	3.125	7.500	.625	•**6480**	#	S	3.125	7.500	.531	Contains• G49 Gasket &• K282 Wiper
5406	2.562	8.250	1.003	•**6481N**	–	–	–	–	–	Contains• G40 Gasket &• K282 Wiper
5408	3.124	8.250	.518	•**6477S**	#	S	3.226	8.250	.518	Contains (2) • G40 Gasket &• G42 Gasket &• J873 Wear Sleeve
5410	3.125	8.125	.571	•**6505S**	#	S	3.125	8.125	.571	Contains• G48 Gasket & (2) • G54 Gasket &• JV495 Wear Sleeve
5414	–	5.625	.430	–	–	–	–	–	–	Contains (2) • G129 Gasket &• G130 Gasket &• G131 Gasket
5419	–	6.906	.440	–	–	–	–	–	–	Contains (2) • G137 Gasket
5422	5.187	6.513	1.380	•**327984**⬅	32	T	5.312	6.513	.500	Contains• JF2280 Wear Sleeve
5424	5.179	6.513	1.380	•**327984**⬅	32	T	5.312	6.513	.500	Contains• JF2280 Wear Sleeve
5436	6.500	8.007	.750	**914412**⬅	91	T	6.625	8.007	.750	Contains JG2361 Wear Sleeve
5441	6.500	8.007	.750	**914411**⬅	91	T	6.625	8.007	.750	Contains JL2361 Wear Sleeve
5443	6.500	8.007	1.000	**914413**➡	91	T	6.625	8.007	1.000	Contains JG2345 Wear Sleeve
5452	3.000	8.250	.531	**6764S**	#	S	3.125	8.250	.500	Contains• G48 Gasket &• G167 Gasket &• J495 Wear Sleeve
5453	3.625	4.879	.585	•**485497**	48	S	3.625	4.879	.585	Contains• 633013 'O' Ring Kit
5458	1.880	2.414	.250	•**6910S**	35	S	1.880	2.414	.250	Contains• 610101 'O' Ring
5460	4.687	5.756	1.562	•**455251H**	45	H	4.812	5.756	.562	Contains• JV729 Wear Sleeve
5461	4.687	5.756	1.562	•**75251S**	7S	S	4.812	5.756	.750	Contains• J729 Wear Sleeve
5462	1.172	1.832	.422	•**6370N**	33	N	1.299	1.832	.375	Contains• J712 Wear Sleeve
5465	3.937	5.506	.859	•**455037**	45	S	4.062	5.506	.562	Contains• JV1362 Wear Sleeve
5471	4.812	6.316	1.250	•**6872S**	47	S	5.500	6.316	1.250	Contains• JV701 Wear Sleeve
5472	4.812	7.004	1.250	•**7006S**	43	S	5.500	7.004	1.250	Contains• JV701 Wear Sleeve
5473	4.812	6.505	1.125	•**6873S**	43	S	5.500	6.505	1.125	Contains• JV701 Wear Sleeve
5475	3.868	5.506	.921	•**6864S**	45	S	4.050	5.506	.671	Contains• J718 Wear Sleeve
5476	–	4.875	.455	–	–	–	–	–	–	Contains (2) • G211 Gasket
***5479**	–	4.862	.410	–	–	–	–	–	–	Contains (2) • G196 Gasket & (2) • G214 Gasket
5481	4.759	6.316	1.250	•**6872S**	47	S	5.500	6.316	1.250	Contains• JV753 Wear Sleeve
5483	4.759	6.505	1.125	•**6873S**	43	S	5.500	6.505	1.125	Contains• JV753 Wear Sleeve
5487	2.000	5.880	.448	–	–	–	–	–	–	Contains (2) • G221 Gasket &• K251 Wiper
5488	2.129	2.766	.250	•**6957**	48	N	2.129	2.766	.250	Contains• 610123 'O' Ring
5494	3.010	8.150	.925	•**6897**	#	S	3.125	8.250	.925	Contains (2) • G40 Gasket &• K156 Wiper
5495	4.759	7.004	1.250	•**7006S**	43	S	5.500	7.004	1.250	Contains• JV753 Wear Sleeve
5499	1.915	2.548	.250	•**7020**	#	S	1.915	2.548	.250	Contains• 610105 'O' Ring
5509	3.119	4.130	.750	•**255566H**	25	H	3.250	4.130	.500	Contains• J1401 Wear Sleeve
5518	3.119	4.756	.875	–	–	–	–	–	–	
***5520**	2.432	3.756	.750	•**415244**	41	S	2.562	3.756	.500	Contains• JV1455 Wear Sleeve
5521	2.120	3.505	.750	•**415093**	41	S	2.250	3.505	.500	Contains• JV1456 Wear Sleeve
5526	3.994	5.004	.718	•**415134**	41	S	4.125	5.004	.468	Contains• JV1461 Wear Sleeve
5527	4.743	6.256	.812	**415068**	41	S	4.875	6.256	.562	Contains• JV1462 Wear Sleeve

Designed For A Specific Application - Not Recommended For General Use ➡ Hydrodynamic Lip Design-CW ⬅ Hydrodynamic Lip Design-CCW ++ Not Sold Separately
% External Bore
* The U.S. customer service number is 877-4-TIMKEN. The Canadian customer service numbers are 800-565-4927 (English) and 800-565-0438 (French-Canadian).
• Sold Separately

	Kit Dimensions						Seal Dimensions			
Kit No.	Shaft	O.D.	Width	Seal No.	Type/ Illus.	Lip Mat'l	Shaft	O.D.	Width	Remarks
5531	1.812	2.879	.718	•**410295**	41	S	1.937	2.879	.468	Contains• JV1464 Wear Sleeve
5532	3.562	5.256	.468	•**416670**	41	S	3.687	5.256	.468	Contains• JV1469 Wear Sleeve
5537	4.062	6.000	.875	•**416673**	41	S	4.187	6.007	.625	Contains• JV1473 Wear Sleeve
5538	6.875	8.382	.750	•**416674**	41	S	7.000	8.382	.750	Contains• JV1474 Wear Sleeve
5550	1.438	2.192	.480	•**9249**	47	S	1.437	2.192	.480	Contains• 623017 'O' Ring
∗**5551**	3.500	5.256	.718	•**416335**	41	S	3.625	5.256	.468	Contains• JV1494 Wear Sleeve
5563	3.937	5.506	.859	•**6864S**	45	S	4.050	5.506	.671	Contains• JV1362 Wear Sleeve
5567	2.430	3.031	.380	–	–	–	–	–	–	
5573	1.915	2.548	.250	•**7020**	#	S	1.915	2.548	.250	Contains• 610145 'O' Ring
5575	4.687	7.635	.359	•**6701**	#	S	4.740	7.575	.410	Contains JV608 Wear Sleeve
∗**5576**	–	5.700	.415	–	–	–	–	–	–	Contains (2) • G427 Gasket
5578	3.125	4.130	1.000	•**485500N**	48	N	3.298	4.130	.562	Contains• K179 Wiper
5581	4.000	5.004	.937	•**7390**%	#	S	4.000	4.906	.821	Contains• JV943 Wear Sleeve
5584	2.750	3.881	1.000	•**415479N**	41	N	3.000	3.881	.468	Contains• K198 Wiper
5588	3.375	4.380	.812	•**8130**%	#	S	3.375	4.380	.730	Contains• JV976 Wear Sleeve
5589	2.129	2.766	.250	•**6957**	48	N	2.129	2.766	.250	Contains• 666151 'O' Ring
5591	–	6.240	.400	–	–	–	–	–	–	Contains (2) • G462 Gasket & (2) • G463 Gasket
5592	1.493	2.507	.700	•**8097**%	39	S	1.476	2.447	.620	Contains• JV970 Wear Sleeve
5593	3.250	4.572	.750	•**200870**%	200E	S	3.249	4.488	.318	Contains• JV980 Wear Sleeve
5594	1.875	4.812	.312	•**7105S**	#	S	1.875	4.812	.312	Contains (2) • G196 Gasket & (2) • G456 Gasket
5596	–	4.875	.410	–	–	–	–	–	–	Contains (2) • G196 Gasket & (2) • G456 Gasket
5599	1.875	2.627	.843	•**470455**	47	S	1.937	2.627	.500	Contains• J990 Wear Sleeve
5601	2.875	3.756	.625	•**476023N**	47	N	3.000	3.756	.375	Contains• JV1120 Wear Sleeve
5602	2.375	3.433	1.000	•**473274N**	47	N	2.500	3.433	.375	Contains• JV1802 Wear Sleeve
5603	2.375	4.943	1.000	•**3136N**⬅➡	47	N	2.500	4.943	.500	Contains• JV1802 Wear Sleeve
5604	2.125	3.072	.433	•**3948**	#	S	2.201	2.741	.197	Contains• JV2019 Wear Sleeve
5609	3.250	4.008	.866	–	–	–	–	–	–	
5613	6.079	7.336	.750	•**2628**	64	H	6.204	7.336	.562	Contains• K458 Wiper &• J1842 Wear Sleeve
5615	7.908	9.508	.960	•**3624**	#	S	8.000	9.508	.860	
				•**3776S**	#	S	7.908	9.535	.960	
5624	5.000	6.131	.875	•**456557**	45	V	5.125	6.131	.500	Contains• JX1831 Wear Sleeve
5625	4.646	5.756	.625	•**485138**	48	S	4.750	5.756	.500	Contains• JX1386 Wear Sleeve
5629	3.000	4.008	.625	•**457034**	45	V	3.125	4.008	.500	Contains• J1121 Wear Sleeve
5632	9.057	10.719	1.000	•**3689**	#	V	9.173	10.719	.625	Contains• J1984 Wear Sleeve
∗**5634**	6.204	7.336	.812	•**3807**	64	H	6.328	7.336	.500	Contains• J1825 Wear Sleeve
5637	6.079	7.336	.600	•**2628**	64	H	6.204	7.336	.562	Contains• J1895 Wear Sleeve
5643	4.875	6.006	.715	•**3782**	#	H	5.000	6.006	.500	Contains• J1606 Wear Sleeve
5645	5.998	6.757	.675	•**4165V**⬅	#	V	6.107	6.757	.500	Contains• J2051 Wear Sleeve
5649	3.562	5.125	.875	•**9584**&	74	S	3.562	4.761	.550	Contains• JV1509 Wear Sleeve
5650	–	5.700	.415	–	–	–	–	–	–	
5657	3.000	4.008	.687	•**457034**	45	V	3.125	4.008	.500	Contains• JX1747 Wear Sleeve
5665	4.841	5.756	.750	•**3492V**	48	V	5.000	5.756	.500	Contains JX1967 Wear Sleeve
5666	2.340	3.355	.650	•**3501V**	69	V	2.420	3.355	.375	Contains• JX1966 Wear Sleeve
5667	3.865	6.102	.975	•**4269**	74	S	4.000	5.700	.850	Contains• J2058 Wear Sleeve
5682	–	–	–	–	–	–	–	–	–	
5685	–	–	–	–	–	–	–	–	–	
5686	–	–	–	–	–	–	–	–	–	(Kit)
5690	–	–	–	–	–	–	–	–	–	(Repair Kit)
5694	–	–	–	•**1884**	32	S	2.047	2.688	.394	(Kit)
				•**4899**	66	S	2.205	2.958	.256	
				722111	–	–	–	–	–	
5695	2.010	2.965	.318	•**SK1**++	#	S	2.030	2.601	.295	Contains• SK3 Wear Sleeve (Kit)
				•**SK2**++	#	S	2.010	2.876	.318	
5696	2.047	2.964	.315	•**1993**	47	S	2.205	2.885	.492	(Kit)
				•**4898**	66	S	2.047	2.603	.295	
				722110	–	–	–	–	–	
5697	1.875	3.150	.315	**4051**	#	S	1.875	2.907	.315	Contains• AS232 'O' Ring
5698	2.420	3.558	.336	**4185**	#	S	2.420	3.558	.336	Contains• AS043 'O' Ring
5699	1.875	2.808	.433	**4310**	285	S	1.875	2.808	.433	Contains• AS232 'O' Ring
5700	–	–	–	–	–	–	–	–	–	(Kit)
5722	5.000	6.006	.717	•**947090**⬅	94	T	5.125	6.006	.413	Contains• JL2370 Wear Sleeve

Designed For A Specific Application - Not Recommended For General Use ⬅ Hydrodynamic Lip Design-CCW ⬅➡ Hydrodynamic Lip Design-Bidirectional
++ Not Sold Separately % External Bore & Flanged O.D.
∗ The U.S. customer service number is 877-4-TIMKEN. The Canadian customer service numbers are 800-565-4927 (English) and 800-565-0438 (French-Canadian).
• Sold Separately

Part No.	Shaft	I.D.	Eff. Shaft Dia.	Flanged O.D.	Width	Type/ Illus.
SK3++	2.896	2.965	–	–	.245	#
J121	1.737	1.732	–	3.100	.203	10
J493	2.763	2.758	2.860	–	.435	15
JV495	3.010	3.005	3.115	–	.435	15
* JV608	4.687	4.680	4.740	–	.283	15
JV701	4.812	4.812	5.510	–	.875	#
J712	1.177	1.172	1.300	–	.422	19
J729	4.687	4.683	4.812	–	1.562	19
JV729	4.687	4.683	4.826	–	1.562	19
JV753	4.764	4.759	5.510	–	.875	#
J756	2.289	2.284	2.386	–	.453	15
J790	2.536	2.531	3.128	–	.625	#
JV790	2.536	2.531	3.128	–	.625	#
J825	1.766	1.761	1.871	–	.875	19
JV825	1.766	1.761	1.871	–	.875	19
JX825	1.766	1.761	1.871	–	.875	19
JV829	9.265	9.256	9.365	–	.990	19
JX829	9.265	9.256	9.365	–	.990	19
JXS829	9.265	9.256	9.365	–	.990	19
JX845	5.641	5.634	5.743	–	.750	19
JX846	6.892	6.884	6.993	–	.937	19
JX847	4.636	4.631	4.744	–	.750	19
J872	–	3.187	3.322	–	.970	1
J873	3.130	3.124	3.226	–	.435	15
J892	7.117	7.109	8.356	8.453	1.684	#
J893	7.221	7.214	–	7.767	.491	#
J930	10.915	10.906	–	11.975	.815	10
JV933	–	2.437	2.570	–	.550	1
JV943	4.917	4.910	5.004	–	.937	1
JV949	3.146	3.140	3.224	–	.625	1
J953	5.637	5.630	5.755	–	1.175	1
JV970	2.458	2.453	2.507	–	.700	1
JV976	–	3.453	4.380	–	.812	2
JV980	4.481	4.312	4.572	–	.750	1
J983	1.646	1.641	1.745	–	.625	19
J986	12.345	11.260	12.400	–	.590	1
J990	1.876	1.871	1.933	–	.843	19
JV1002	5.875	5.868	6.000	–	.875	19
JX1002	5.875	5.868	6.000	–	.875	19
JV1018	2.288	2.284	2.386	–	.453	15
JV1019	6.444	6.437	6.526	–	.550	1
J1025	4.691	3.562	4.786	–	.840	1
J1043	2.423	2.418	–	2.680	.488	#
J1044	3.000	2.995	3.125	–	1.250	#
J1049	1.843	1.781	1.937	2.521	.782	8
J1059	6.575	6.515	6.687	7.531	1.040	8
JV1060	4.918	4.687	5.009	–	.906	1
J1063	1.875	1.870	2.000	–	.562	19
J1064	–	2.250	2.404	3.073	.770	#
J1065	2.097	2.093	2.187	2.725	.770	8
JV1074	3.874	3.868	4.035	–	.831	19
JV1076	2.809	2.804	2.894	3.250	.500	8
JV1077	–	4.500	5.130	–	.600	1
J1081	5.375	5.368	5.500	–	.750	19
J1082	3.125	3.119	3.225	–	.625	19
J1084	3.250	3.244	3.353	–	.625	19
J1086	2.641	2.562	2.755	–	.690	1
J1087	8.525	8.517	8.625	10.550	1.105	8
JV1091	3.419	3.414	3.510	–	.531	1
J1094	1.852	1.847	1.947	–	.647	19
* JV1099	2.906	2.900	3.000	3.125	.562	#
J1101	1.500	1.495	1.625	–	.625	19
JV1101	1.500	1.495	1.625	–	.625	19
J1102	1.562	1.557	1.687	–	.625	19
JV1102	1.562	1.557	1.687	–	.625	19
J1103	1.625	1.620	1.750	–	.625	19
JV1103	1.625	1.620	1.750	–	.625	19
J1105	1.750	1.745	1.875	–	.625	19
JV1105	1.750	1.745	1.875	–	.625	19
JX1105	1.750	1.745	1.875	–	.625	19

Part No.	Shaft	I.D.	Eff. Shaft Dia.	Flanged O.D.	Width	Type/ Illus.
J1106	1.812	1.807	1.937	–	.625	19
JV1106	1.812	1.807	1.937	–	.625	19
J1107	1.875	1.870	2.000	–	.625	19
JV1107	1.875	1.870	2.000	–	.625	19
J1109	2.000	1.995	2.125	–	.625	19
JV1109	2.000	1.995	2.125	–	.625	19
J1110	2.062	2.057	2.187	–	.625	19
JV1110	2.062	2.057	2.187	–	.625	19
J1111	2.125	2.120	2.250	–	.625	19
JV1111	2.125	2.120	2.250	–	.625	19
JX1111	2.125	2.120	2.250	2.250	.625	19
J1112	2.187	2.182	2.312	–	.625	19
JV1112	2.187	2.182	2.312	–	.625	19
J1113	2.250	2.245	2.375	–	.625	19
JV1113	2.250	2.245	2.375	–	.625	19
J1114	2.312	2.307	2.437	–	.625	19
JV1114	2.312	2.307	2.437	–	.625	19
J1115	2.375	2.370	2.500	–	.625	19
JV1115	2.375	2.370	2.500	–	.625	19
J1117	2.500	2.495	2.625	–	.625	19
JV1117	2.500	2.495	2.625	–	.625	19
JX1117	2.500	2.495	2.625	–	.625	19
J1118	2.625	2.620	2.750	–	.625	19
JV1118	2.625	2.620	2.750	–	.625	19
J1119	2.750	2.745	2.875	–	.625	19
JV1119	2.750	2.745	2.875	–	.625	19
J1120	2.875	2.870	3.000	–	.625	19
JV1120	2.875	2.870	3.000	–	.625	19
JX1120	2.875	2.870	3.000	–	.625	19
J1121	3.000	2.994	3.125	–	.625	19
JV1121	3.000	2.994	3.125	–	.625	19
J1122	3.125	3.119	3.250	–	.625	19
JV1122	3.125	3.119	3.250	–	.625	19
JX1122	3.125	3.119	3.250	–	.625	19
J1123	3.250	3.244	3.375	–	.625	19
JV1123	3.250	3.244	3.375	–	.625	19
J1124	3.375	3.369	3.500	–	.625	19
JV1124	3.375	3.369	3.500	–	.625	19
J1125	3.500	3.494	3.625	–	.625	19
JV1125	3.500	3.494	3.625	–	.625	19
JX1125	3.500	3.494	3.625	–	.625	19
J1126	3.625	3.619	3.750	–	.625	19
JV1126	3.625	3.619	3.750	–	.625	19
J1127	3.750	3.744	3.875	–	.625	19
JV1127	3.750	3.744	3.875	–	.625	19
J1128	3.875	3.869	4.000	–	.625	19
JV1128	3.875	3.869	4.000	–	.625	19
JX1128	3.875	3.869	4.000	–	.625	19
J1129	4.000	3.989	4.125	–	.625	19
JV1129	4.000	3.994	4.125	–	.625	19
J1130	4.125	4.119	4.250	–	.625	19
JV1130	4.125	4.119	4.250	–	.625	19
J1131	4.250	4.244	4.375	–	.750	19
JV1131	4.250	4.244	4.375	–	.750	19
JX1131	4.250	4.244	4.375	–	.750	19
J1132	4.375	4.369	4.500	–	.750	19
JV1132	4.375	4.369	4.500	–	.750	19
JX1132	4.375	4.369	4.500	–	.750	19
J1133	4.500	4.493	4.625	–	.750	19
JV1133	4.500	4.493	4.625	–	.750	19
J1134	4.625	4.618	4.750	–	.750	19
JV1134	4.625	4.618	4.750	–	.750	19
J1135	4.750	4.743	4.875	–	.750	19
JV1135	4.750	4.743	4.875	–	.750	19
J1136	4.875	4.868	5.000	–	.750	19
JV1136	4.875	4.868	5.000	–	.750	19
JX1136	4.875	4.868	5.000	–	.750	19
J1137	5.000	4.993	5.125	–	.750	19
JV1137	5.000	4.993	5.125	–	.750	19
JX1137	5.000	4.993	5.125	–	.750	19

For Illustration and Material Data See Technical Section

Designed For A Specific Application - Not Recommended For General Use ++ Not Sold Separately

* The U.S. customer service number is 877-4-TIMKEN. The Canadian customer service numbers are 800-565-4927 (English) and 800-565-0438 (French-Canadian).

Part No.	Shaft	I.D.	Eff. Shaft Dia.	Flanged O.D.	Width	Type/ Illus.
J1138	5.250	5.243	5.375	–	.750	19
JV1138	5.250	5.243	5.375	–	.750	19
J1139	5.500	5.493	5.625	–	.750	19
JV1139	5.500	5.493	5.625	–	.750	19
J1140	5.750	5.743	5.875	–	.750	19
JV1140	5.750	5.743	5.875	–	.750	19
J1141	6.000	5.993	6.125	–	.750	19
JV1141	6.000	5.993	6.125	–	.750	19
JX1141	6.000	5.993	6.125	6.125	.750	19
J1151	4.541	4.535	4.625	–	.468	1
JV1152	3.721	3.715	3.805	4.200	.458	19
J1155	4.625	4.618	4.739	–	.340	19
JV1157	–	2.140	2.331	2.625	.625	–
J1158	1.125	1.120	1.250	–	.500	19
JX1158	1.125	1.120	1.250	–	.500	19
J1159	–	4.937	5.128	5.875	.838	8
JV1161	2.567	2.562	3.115	–	.625	#
JV1166	3.686	3.680	3.767	–	.625	1
J1172	4.275	4.187	4.375	5.125	.898	8
JV1172	4.275	4.187	4.375	5.125	.898	8
J1173	2.890	2.885	3.000	–	1.000	19
JV1173	2.890	2.885	3.000	–	1.000	19
JV1179	3.475	3.375	3.573	–	.800	1
JV1190	7.375	7.367	7.500	–	.875	19
JX1190	7.375	7.367	7.500	–	.875	19
J1191	3.035	3.030	3.125	3.750	1.070	8
J1196	–	8.125	8.250	9.500	.875	8
J1197	4.500	4.494	5.500	–	.875	#
JV1210	4.260	4.256	4.387	4.625	.656	10
J1211	1.731	1.726	1.812	3.000	1.000	#
JV1215	2.728	2.722	2.806	–	.590	1
JV1216	2.698	2.690	2.774	–	.953	#
J1235	2.075	2.070	2.125	2.375	.448	10
JV1236	3.266	3.260	3.313	–	.453	1
J1238	4.500	4.493	4.625	–	.625	19
JX1238	4.500	4.493	4.625	–	.625	19
J1245	5.900	5.890	6.000	7.125	1.035	8
J1246	1.041	1.036	1.125	–	.625	19
JV1246	1.041	1.036	1.125	–	.625	19
JV1252	1.251	1.246	1.375	–	.500	19
JX1252	1.251	1.246	1.375	–	.500	19
J1267	.875	.869	.999	–	.562	19
JV1267	.875	.869	.999	–	.562	19
JV1277	1.375	1.370	1.500	–	.625	19
J1278	6.875	6.867	7.000	–	.750	19
JV1278	6.875	6.867	7.000	–	.750	19
J1284	4.535	4.530	4.625	–	.670	#
J1288	2.500	2.495	2.625	–	.875	19
J1289	2.750	2.745	2.875	–	.875	19
J1293	3.500	3.494	3.625	–	.875	19
JV1304	2.412	2.400	2.518	–	.435	15
J1355	5.625	5.618	5.750	–	1.000	19
JV1355	5.625	5.618	5.750	–	1.000	19
JV1361	3.874	3.868	4.040	4.500	.921	10
JV1362	3.936	3.930	4.042	4.375	.859	#
JV1363	4.500	4.493	4.625	–	.687	19
JX1363	4.500	4.493	4.625	–	.687	19
JV1368	3.625	3.619	3.750	–	.625	19
JV1371	2.906	2.900	3.000	3.125	.562	#
JV1373	2.636	2.630	2.722	–	.500	1
JV1378	–	7.500	7.881	8.562	.781	#
J1380	4.090	4.083	–	5.125	.235	#
JX1386	4.646	4.639	4.742	–	.625	19
J1396	2.000	1.995	2.125	–	.750	19
J1397	1.625	1.620	1.750	–	.750	19
J1401	3.125	3.119	3.250	–	.750	19
JX1401	3.125	3.119	3.250	–	.750	19
JV1403	1.875	1.870	2.000	–	.625	19
J1405	4.465	4.459	4.575	5.125	.230	14
JV1409	1.343	1.338	1.500	–	.625	19

Part No.	Shaft	I.D.	Eff. Shaft Dia.	Flanged O.D.	Width	Type/ Illus.
JV1410	1.365	1.360	1.496	–	.625	19
J1425	4.346	4.340	4.906	5.625	.563	#
J1427	2.812	2.807	2.943	3.156	1.000	10
JV1427	2.812	2.807	2.937	3.156	1.000	10
J1432	1.125	1.120	1.250	–	.625	19
JV1432	1.125	1.120	1.250	–	.625	19
JV1455	2.437	2.432	2.562	2.750	.750	10
JV1456	2.125	2.120	2.250	2.437	.750	10
JV1461	4.000	3.994	4.125	4.312	.718	10
JV1462	4.750	4.743	4.853	5.187	.812	10
JV1463	5.500	5.493	5.625	5.812	.875	10
JV1464	1.812	1.807	1.937	2.125	.718	10
J1469	3.562	3.556	3.666	3.825	.718	10
JV1469	3.562	3.556	3.687	3.825	.718	10
JV1473	4.062	4.056	4.187	4.375	.875	10
JV1474	6.875	6.867	7.000	7.187	1.000	10
J1493	1.468	1.463	1.625	–	.625	19
JV1493	1.468	1.463	1.625	–	.625	19
JV1494	3.500	3.494	3.625	3.937	.718	10
JV1500	1.625	1.620	1.755	–	.625	19
JX1505	1.625	1.620	1.750	–	.535	19
JV1508	3.125	3.118	3.261	3.562	.920	10
JV1509	3.437	3.430	3.566	3.875	.875	10
JV1511	3.937	3.930	4.070	4.375	.875	10
JV1511A	3.930	3.925	4.375	–	.875	#
JV1512	4.375	4.368	4.500	4.812	.843	10
JV1513	4.500	4.493	4.625	4.937	.912	10
J1515	2.750	2.745	2.875	–	.625	19
JV1517	3.678	3.670	3.755	–	.625	1
JV1550	5.795	5.785	5.880	–	1.000	1
JX1576	2.750	2.745	2.875	–	.750	19
JV1582	3.678	3.670	3.758	–	.625	1
J1594	.750	.745	.875	–	.500	19
JV1594	.750	.745	.875	–	.500	19
J1606	4.875	4.868	5.000	–	.715	19
J1629	–	8.125	8.250	9.375	1.085	#
JV1669	7.875	7.867	8.011	–	.750	19
JV1673	–	2.799	2.911	3.125	.640	#
JV1704	5.392	5.385	5.500	–	.625	19
J1718	3.375	3.369	3.500	–	1.125	19
JX1747	3.000	2.994	3.125	–	.687	19
J1750	3.742	3.732	3.821	–	.500	#
JV1759	7.625	7.617	7.750	–	1.125	19
JV1760	7.750	7.742	7.875	–	1.000	19
J1780	2.502	2.498	2.627	–	1.000	19
JV1802	2.375	2.370	2.500	–	1.000	19
J1807	1.500	1.495	1.625	–	.415	19
JV1808	10.312	10.303	10.479	–	1.125	19
J1824	6.081	6.073	6.204	–	1.031	19
J1825	6.206	6.198	6.328	–	.812	19
JV1825	6.206	6.198	6.328	–	.812	19
J1828	5.375	5.368	5.500	–	.848	#
JX1828	5.375	5.368	5.500	–	.848	#
JX1831	5.000	4.993	5.125	–	.875	19
JV1836	2.236	2.231	2.375	–	.625	19
JV1837	1.980	1.975	2.111	–	.625	19
J1838	6.187	6.180	6.312	–	.848	#
J1842	6.081	6.073	6.204	–	.750	19
JV1850	8.125	8.117	8.250	–	1.470	19
JX1867	4.687	4.680	4.812	–	1.240	19
J1869	6.375	6.368	6.500	–	.875	19
JV1869	6.375	6.368	6.500	–	.875	19
JV1872	1.062	1.057	1.187	1.437	.640	10
JV1873	1.250	1.245	1.375	1.562	.750	10
JV1874	3.625	3.619	3.750	4.000	.875	10
JV1875	3.250	3.244	3.375	3.625	.750	10
J1876	2.475	2.470	2.625	–	1.125	19
J1880	4.502	4.496	4.627	–	1.000	19
J1895	6.080	6.073	6.204	–	.600	19
JV1897	–	3.750	3.942	4.250	.500	#

For Illustration and Material Data See Technical Section
Designed For A Specific Application - Not Recommended For General Use

Part No.	Shaft	I.D.	Eff. Shaft Dia.	Flanged O.D.	Width	Type/ Illus.
JX1920	2.382	2.377	2.491	–	.937	19
J1929	4.500	4.493	4.625	–	.625	19
JV1931	–	–	2.515	2.855	.510	#
JV1935	4.474	4.468	4.604	–	.530	19
JV1936	3.668	3.662	3.798	–	.530	#
JV1944	5.400	5.393	5.442	–	.760	1
* **JX1967**	4.840	4.834	5.000	–	.750	19
JV1976	–	4.000	4.630	–	.700	1
JV1977	–	4.500	5.130	–	.700	1
JV1978	5.625	5.618	5.754	–	1.250	19
J1984	9.058	9.048	9.173	–	1.000	19
JX1990	2.375	2.370	2.500	–	1.000	19
JV1999	4.875	4.868	5.000	–	1.250	19
JV2019	2.126	2.121	2.200	2.953	.302	#
J2037	5.187	5.180	5.312	–	.750	19
JV2038	4.875	4.868	5.000	–	1.000	19
JX2045	4.212	4.207	4.325	–	.984	19
J2053	6.079	6.073	6.204	–	.866	19
JV2088	5.991	5.986	6.100	–	.455	#
JX2162	4.834	4.829	4.994	–	.710	#
JF2280	5.187	5.179	5.312	–	1.380	19
JF2282	4.687	4.679	4.812	–	1.240	19
* **JG2345**	6.500	6.492	6.625	–	.875	19
* **JG2361**	6.500	6.492	6.625	–	.750	19
* **JL2361**	6.500	6.492	6.625	–	.625	19
JL2370	5.000	–	5.125	–	.717	19

For Illustration and Material Data See Technical Section

Designed For A Specific Application - Not Recommended For General Use

* The U.S. customer service number is 877-4-TIMKEN. The Canadian customer service numbers are 800-565-4927 (English) and 800-565-0438 (French-Canadian).

Part No.	Shaft Range Minimum.	Shaft Range Maximum.	Width on Shaft	Overall Width	Flanged O.D.	Installation Depth
88176	1.761	1.767	.563	.688	2.063	.813
88179	1.778	1.784	.675	.800	2.125	1.000
88186	1.866	1.872	.889	1.025	2.187	1.000
88187	1.872	1.878	.563	.688	2.203	1.000
88199	1.997	2.003	.563	.688	2.406	1.000
88218	2.186	2.192	.781	.938	2.500	1.313
88225	2.249	2.255	.781	.938	2.531	1.313
88233	2.327	2.333	.750	.875	2.750	1.610
99049	.469	.475	.236	.331	.787	.472
99050	.498	.502	.250	.344	.610	2.008
99056	.560	.566	.250	.391	.750	1.831
99058	.626	.630	.313	.438	.718	2.000
99059	.589	.593	.197	.354	.750	.425
99060	.682	.686	.313	.438	.900	2.000
99062	.623	.627	.313	.406	.813	2.000
99068	.667	.671	.315	.433	1.063	2.008
99075	.748	.752	.375	.500	.900	2.000
99076	.748	.752	.313	.438	.938	2.000
99078	.785	.789	.313	.433	.999	2.000
99080	.780	.784	.313	.438	.935	2.000
99081	.759	.761	.313	.438	.938	2.000
99082	.704	.709	.315	.433	1.063	1.811
99085	.861	.866	.315	.472	1.058	1.813
99086	.857	.861	.250	.375	1.155	2.000
99087	.873	.877	.313	.438	1.093	2.000
99091	.908	.912	.313	.438	1.218	1.847
99094	.966	.970	.313	.438	1.130	2.000
99096	.966	.970	.625	.719	1.130	2.000
99098	.982	.986	.313	.433	1.378	2.000
99101	.998	1.002	.313	.438	1.219	2.000
99103	1.019	1.024	.313	.472	1.312	1.813
99106	1.060	1.064	.313	.438	1.320	2.812
99108	1.087	1.091	.313	.438	1.406	.625
99111	1.100	1.104	.375	.500	1.375	2.813
99112	1.123	1.127	.313	.438	1.575	.688
99114	1.179	1.184	.315	.433	1.400	.688
99118	1.185	1.190	.313	.438	1.400	.875
99120	1.154	1.158	.375	.500	1.350	.688
99122	1.173	1.178	.313	.438	1.575	.688
99123	1.216	1.222	.315	.438	1.575	.688
99125	1.247	1.253	.313	.438	1.500	.688
99128	1.257	1.263	.315	.437	1.496	.709
99129	1.308	1.314	.250	.375	1.600	.813
99131	1.310	1.316	.500	.625	1.594	.813
99133	1.371	1.377	.313	.438	1.638	.813
99134	1.336	1.342	.500	.625	1.638	.813
99138	1.371	1.377	.500	.625	1.638	.813
99139	1.375	1.381	.512	.630	1.638	.812
99141	1.237	1.243	.315	.438	1.540	.688
99143	1.432	1.438	.563	.688	1.781	1.000
99144	1.435	1.441	.375	.500	1.781	1.016
99145	1.453	1.460	.375	.500	1.781	.812
99146	1.412	1.417	.518	.669	1.689	.984
99147	1.490	1.496	.512	.669	1.780	.984
99149	1.497	1.503	.563	.688	1.781	1.000
99150	1.497	1.503	.375	.500	1.781	1.016
99152	1.520	1.526	.438	.563	1.859	1.016
99155	1.549	1.555	.438	.563	1.859	1.000
99156	1.559	1.565	.563	.688	1.859	1.000
99157	1.572	1.578	.512	.630	1.850	1.023
99160	1.602	1.608	.500	.641	1.938	1.000
99161	1.622	1.628	.313	.438	1.875	1.016
99162	1.623	1.628	.563	.688	1.875	.813
99166	1.647	1.654	.445	.571	2.087	.827
99167	1.685	1.691	.313	.438	1.906	.875
99168	1.684	1.690	.563	.688	1.906	.875
99169	1.647	1.654	.563	.688	2.087	.827
99170	1.736	1.742	.375	.500	2.063	.813
99171	1.715	1.721	.563	.688	2.031	.813
99172	1.747	1.753	.375	.500	2.055	.813

Part No.	Shaft Range Minimum.	Shaft Range Maximum.	Width on Shaft	Overall Width	Flanged O.D.	Installation Depth
99174	1.747	1.753	.563	.688	2.063	.813
99175	1.747	1.753	.750	.875	2.063	.813
99176	1.761	1.767	.563	.688	2.063	.813
99177	1.769	1.775	.551	.669	2.087	.812
99179	1.778	1.784	.675	.800	2.125	1.062
99180	1.747	1.753	.531	.625	2.063	.875
99181	1.809	1.815	.563	.688	2.156	1.000
99184	1.872	1.878	.375	.516	2.203	1.050
99185	1.857	1.863	.563	.688	2.156	1.000
99186	1.866	1.872	.889	1.025	2.187	1.000
99187	1.872	1.878	.563	.688	2.203	1.000
99188	1.872	1.878	.295	.415	2.203	.744
99189	1.887	1.893	.551	.668	2.205	.984
99190	1.872	1.878	.175	.295	2.203	.744
99192	1.909	1.915	.375	.500	2.219	1.000
99193	1.934	1.940	.563	.688	2.219	1.000
99196	1.965	1.971	.551	.688	2.244	.984
99198	1.977	1.983	.563	.704	2.313	1.050
99199	1.997	2.003	.563	.688	2.406	1.000
99200	1.997	2.003	.875	1.000	2.406	1.000
99204	2.041	2.047	.500	.625	2.469	1.000
99205	2.057	2.063	.781	.938	2.469	1.375
99210	2.123	2.128	.500	.750	2.422	1.281
99212	2.124	2.130	.781	.938	2.422	1.375
99215	2.162	2.168	.787	.905	2.441	1.250
99218	2.186	2.192	.781	.938	2.500	1.313
99220	2.197	2.205	.500	.625	2.500	1.250
99225	2.249	2.255	.781	.938	2.531	1.313
99226	2.237	2.243	.764	.900	2.562	1.250
99227	2.249	2.255	.313	.438	2.531	1.313
99229	2.227	2.233	.500	.625	2.531	1.313
99230	2.227	2.233	.781	.906	2.531	1.250
99231	2.309	2.315	.781	.938	2.688	1.600
99233	2.327	2.333	.750	.875	2.750	1.610
99235	2.359	2.365	.787	.905	2.785	1.375
99236	2.369	2.375	.781	.938	2.750	1.375
99237	2.374	2.380	.781	.938	2.734	1.375
99238	2.372	2.378	.594	.750	2.750	1.375
99240	2.374	2.380	.526	.683	2.750	1.375
99241	2.359	2.365	.370	.449	2.783	1.472
99242	2.435	2.441	.500	.626	2.827	1.417
99243	2.434	2.440	.781	.938	2.828	1.375
99248	2.500	2.506	.500	.656	2.828	1.375
99249	2.489	2.495	.781	.938	2.875	1.393
99250	2.500	2.506	.781	.938	2.828	1.375
99251	2.510	2.516	.781	.906	2.828	1.438
99253	2.497	2.503	.555	.650	2.820	.890
99254	2.556	2.562	.787	.905	2.850	1.378
99256	2.560	2.566	.781	.938	2.891	1.375
99259	2.595	2.602	.781	.938	2.990	1.250
99260	2.622	2.628	.500	.625	3.047	1.375
99261	2.618	2.624	.781	.938	3.047	1.375
99262	2.625	2.631	.781	.938	3.047	1.375
99264	2.621	2.627	.781	.906	3.047	1.375
99267	2.747	2.753	1.438	1.625	3.075	1.625
99268	2.727	2.733	.781	.906	3.125	1.313
99269	2.750	2.756	1.125	1.250	3.125	1.250
99270	2.747	2.753	.781	.906	3.125	1.250
99272	2.750	2.756	.406	.563	3.125	1.250
99273	2.740	2.746	.781	.938	3.065	1.250
99274	2.745	2.751	.781	.938	3.125	1.250
99275	2.750	2.756	.781	.938	3.125	1.250
99276	2.753	2.759	.787	.945	3.125	1.250
99281	2.809	2.815	.594	.688	3.188	1.250
99282	2.838	2.844	.500	.656	3.225	1.250
99286	2.866	2.872	.781	.938	3.188	1.250
99287	2.873	2.879	.781	.938	3.219	1.250
99289	2.950	2.956	.594	.689	3.272	1.102
99290	2.937	2.943	.500	.641	3.344	1.331
99291	2.990	2.996	.484	.625	3.359	1.331

Part No.	Shaft Range Minimum.	Shaft Range Maximum.	Width on Shaft	Overall Width	Flanged O.D.	Installation Depth
99292	2.972	2.976	.813	–	–	–
99293	2.937	2.943	.781	.938	3.344	1.250
99294	2.950	2.956	.866	1.024	3.305	1.312
99296	2.997	3.003	.813	.938	3.240	1.375
99298	2.990	2.996	.563	.688	3.359	1.375
99299	2.990	2.996	.813	1.000	3.359	1.250
99300	3.000	3.006	.813	1.000	3.453	1.250
99301	3.008	3.014	.500	.625	3.355	2.000
99303	3.000	3.006	.625	.813	3.345	1.063
99307	3.124	3.132	.551	.709	3.525	2.031
99311	3.120	3.126	.688	.813	3.531	2.000
99312	3.120	3.126	.813	1.000	3.531	2.000
99313	3.142	3.150	.750	.886	3.540	1.375
99315	3.146	3.153	.827	.945	3.543	1.375
99317	3.146	3.153	.433	.590	3.543	1.378
99322	3.247	3.253	.813	1.000	3.594	1.375
99323	3.248	3.254	.600	.725	3.585	1.375
99324	3.250	3.256	.595	.719	3.594	1.375
99325	3.250	3.256	.813	1.000	3.594	1.375
99326	3.250	3.256	.688	.875	3.585	1.250
99328	3.225	3.231	.661	.850	3.587	1.732
99331	3.307	3.313	.813	1.000	3.688	1.375
99333	3.337	3.346	.827	.984	3.700	1.378
99334	3.338	3.346	.827	.984	3.697	1.433
99337	3.373	3.379	.813	1.000	3.688	1.375
99338	3.373	3.379	.375	.500	3.688	1.410
99339	3.435	3.441	.781	.906	3.844	1.406
99340	3.477	3.483	.781	.906	3.835	1.406
99347	3.500	3.506	.315	.500	3.827	1.339
99349	3.501	3.507	.626	.811	3.842	1.339
99350	3.500	3.506	.813	1.000	3.844	1.375
99351	3.540	3.546	.710	.906	4.000	1.813
99353	3.540	3.546	.528	.665	4.000	1.732
99354	3.540	3.546	.906	1.102	4.000	1.750
99356	3.560	3.566	.813	1.000	3.900	1.750
99359	3.685	3.691	.813	.938	4.025	1.750
99360	3.618	3.624	.811	1.000	4.031	1.732
99362	3.623	3.629	.813	1.000	4.031	1.750
99363	3.623	3.629	.500	.625	4.025	1.750
99364	3.740	3.746	.469	.594	4.035	1.750
99365	3.685	3.691	.813	.938	4.025	1.750
99367	3.750	3.756	.344	.500	4.031	1.750
99368	3.684	3.690	.313	.438	3.830	.875
99369	3.737	3.743	.827	.945	4.025	1.750
99372	3.750	3.756	.688	.875	4.031	1.875
99374	3.740	3.746	.344	.500	4.031	1.750
99376	3.746	3.752	.563	.688	4.025	1.750
99387	3.873	3.879	.813	1.000	4.219	1.875
99393	3.935	3.941	.813	1.000	4.313	1.340
99395	3.998	4.006	.600	.725	–	2.050
99399	3.998	4.006	.813	1.000	4.375	1.250
99400	3.998	4.006	.650	.775	4.375	1.375
99401	3.998	4.006	.500	.625	4.375	2.066
99412	4.122	4.130	.813	1.000	4.420	1.375
99413	4.130	4.138	.787	.906	4.470	1.378
99418	4.183	4.191	.813	1.000	4.500	1.375
99423	4.226	4.234	.781	.906	4.610	1.438
99424	4.248	4.256	.813	1.000	4.813	1.375
99435	4.327	4.335	.509	.650	4.921	1.250
99437	4.370	4.378	.813	1.000	4.750	1.650
99439	4.434	4.442	1.000	1.142	4.813	1.313
99450	4.496	4.504	.813	1.000	5.000	1.375
99452	4.523	4.531	.813	.938	5.000	1.250
99463	4.621	4.629	1.000	1.250	5.063	1.375
99465	4.621	4.629	.438	.625	5.000	1.375
99468	4.685	4.693	.812	1.000	5.062	1.375
99472	4.801	4.807	.787	.945	5.177	1.260
99473	4.720	4.728	.787	.984	5.110	1.260
99475	4.746	4.754	.500	.750	5.250	1.500
99487	4.871	4.879	.625	.752	5.252	1.457

Part No.	Shaft Range Minimum.	Shaft Range Maximum.	Width on Shaft	Overall Width	Flanged O.D.	Installation Depth
99490	4.917	4.925	.394	.551	5.402	1.457
99491	5.117	5.125	.866	.996	5.492	1.299
99492	4.917	4.925	1.024	1.260	5.400	1.438
99494	5.110	5.118	.750	.938	5.493	1.181
99498	4.998	5.006	.688	.875	5.400	1.438
99499	4.998	5.006	.813	1.000	5.406	1.500
99525	5.246	5.254	.813	1.000	5.560	1.250
99537	5.371	5.379	.813	1.000	5.875	1.250
99549	5.498	5.506	.812	1.000	5.938	1.250
99552	5.508	5.516	.807	1.000	5.945	1.250
99575	5.746	5.754	.813	1.000	6.180	1.750
99587	5.871	5.879	1.000	1.250	6.188	1.313
99595	5.895	5.905	1.024	1.181	6.260	1.338
99596	5.934	5.942	1.000	1.125	6.375	1.875
99599	5.995	6.003	1.000	1.250	6.375	1.750
99601	5.995	6.003	.500	.750	6.360	1.750
99606	6.092	6.102	1.024	1.181	6.500	1.299
99625	6.245	6.255	1.031	1.250	6.625	1.750
99630	6.289	6.299	1.000	1.250	7.000	1.800
99640	6.683	6.693	1.250	1.496	7.188	1.750
99650	6.495	6.505	1.000	1.250	7.000	1.750
99675	6.745	6.755	.813	1.063	7.125	1.750
99700	6.995	7.005	1.000	1.250	7.500	1.750
99721	7.077	7.087	1.300	1.496	7.500	1.752
99725	7.244	7.254	1.250	1.500	7.760	2.175
99750	7.495	7.505	.813	1.000	7.875	1.250
99775	7.745	7.755	1.000	1.313	8.270	1.875
99787	7.869	7.879	1.359	1.500	8.375	1.750
99799	7.933	7.943	1.000	1.250	8.375	1.750
99800	7.995	8.005	1.000	1.250	8.375	1.750

Part No.	Mat'l Code	Style	Shaft Size Metric (d1)	Shaft Size Inch Min. (d1)	Shaft Size Inch Max. (d1)	Width On Shaft (A)	Overall Width (B)	Height (c)	Fitted Width (B1)	Width Tolerance (+/-)
800030	S	VRS1	3	0.11	0.14	0.08	0.12	0.06	0.10	0.012
800034	V	VRS1	3	0.11	0.14	0.08	0.12	0.06	0.10	0.012
800040	S	VRS1	4	0.14	0.18	0.09	0.15	0.08	0.12	0.016
800044	V	VRS1	4	0.14	0.18	0.09	0.15	0.08	0.12	0.016
800050	S	VRS1	5	0.18	0.21	0.09	0.15	0.08	0.12	0.016
800051	S	VRS2	5	0.18	0.21	0.15	0.21	0.08	0.18	0.016
800054	V	VRS1	5	0.18	0.21	0.09	0.15	0.08	0.12	0.016
800055	V	VRS2	5	0.18	0.21	0.15	0.21	0.08	0.18	0.016
800060	S	VRS1	6	0.21	0.26	0.09	0.15	0.08	0.12	0.016
800061	S	VRS2	6	0.21	0.26	0.15	0.21	0.08	0.18	0.016
800064	V	VRS1	6	0.21	0.26	0.09	0.15	0.08	0.12	0.016
800065	V	VRS2	6	0.21	0.26	0.15	0.21	0.08	0.18	0.016
800070	S	VRS1	7	0.26	0.31	0.09	0.15	0.08	0.12	0.016
800071	S	VRS2	7	0.26	0.31	0.15	0.21	0.08	0.18	0.016
800074	V	VRS1	7	0.26	0.31	0.09	0.15	0.08	0.12	0.016
800075	V	VRS2	7	0.26	0.31	0.15	0.21	0.08	0.18	0.016
800080	S	VRS1	8	0.31	0.37	0.09	0.15	0.08	0.12	0.016
800081	S	VRS2	8	0.31	0.37	0.15	0.21	0.08	0.18	0.016
800084	V	VRS1	8	0.31	0.37	0.09	0.15	0.08	0.12	0.016
800085	V	VRS2	8	0.31	0.37	0.15	0.21	0.08	0.18	0.016
800100	S	VRS1	10	0.37	0.45	0.13	0.22	0.12	0.18	0.020
800101	S	VRS2	10	0.37	0.45	0.22	0.30	0.12	0.26	0.020
800104	V	VRS1	10	0.37	0.45	0.13	0.22	0.12	0.18	0.020
800105	V	VRS2	10	0.37	0.45	0.22	0.30	0.12	0.26	0.020
800120	S	VRS1	12	0.45	0.49	0.13	0.22	0.12	0.18	0.020
800121	S	VRS2	12	0.45	0.49	0.22	0.30	0.12	0.26	0.020
800124	V	VRS1	12	0.45	0.49	0.13	0.22	0.12	0.18	0.020
800125	V	VRS2	12	0.45	0.49	0.22	0.30	0.12	0.26	0.020
800130	S	VRS1	13	0.49	0.53	0.13	0.22	0.12	0.18	0.020
800134	V	VRS1	13	0.49	0.53	0.13	0.22	0.12	0.18	0.020
800140	S	VRS1	14	0.53	0.61	0.13	0.22	0.12	0.18	0.020
800141	S	VRS2	14	0.53	0.61	0.22	0.30	0.12	0.26	0.020
800144	V	VRS1	14	0.53	0.61	0.13	0.22	0.12	0.18	0.020
800145	V	VRS2	14	0.53	0.61	0.22	0.30	0.12	0.26	0.020
800160	S	VRS1	16	0.61	0.69	0.13	0.22	0.12	0.18	0.020
800161	S	VRS2	16	0.61	0.69	0.22	0.30	0.12	0.26	0.020
800164	V	VRS1	16	0.61	0.69	0.13	0.22	0.12	0.18	0.020
800165	V	VRS2	16	0.61	0.69	0.22	0.30	0.12	0.26	0.020
800180	S	VRS1	18	0.69	0.75	0.13	0.22	0.12	0.18	0.020
800181	S	VRS2	18	0.69	0.75	0.22	0.30	0.12	0.26	0.020
800184	V	VRS1	18	0.69	0.75	0.13	0.22	0.12	0.18	0.020
800185	V	VRS2	18	0.69	0.75	0.22	0.30	0.12	0.26	0.020
800200	S	VRS1	20	0.75	0.83	0.18	0.30	0.16	0.24	0.030
800201	S	VRS2	20	0.75	0.83	0.31	0.41	0.16	0.35	0.030
800204	V	VRS1	20	0.75	0.83	0.18	0.30	0.16	0.24	0.030
800205	V	VRS2	20	0.75	0.83	0.31	0.41	0.16	0.35	0.030
800220	S	VRS1	22	0.83	0.95	0.18	0.30	0.16	0.24	0.030
800221	S	VRS2	22	0.83	0.95	0.31	0.41	0.16	0.35	0.030
800224	V	VRS1	22	0.83	0.95	0.18	0.30	0.16	0.24	0.030
800225	V	VRS2	22	0.83	0.95	0.31	0.41	0.16	0.35	0.030
800250	S	VRS1	25	0.95	1.07	0.18	0.30	0.16	0.24	0.030
800251	S	VRS2	25	0.95	1.07	0.31	0.41	0.16	0.35	0.030
800254	V	VRS1	25	0.95	1.07	0.18	0.30	0.16	0.24	0.030
800255	V	VRS2	25	0.95	1.07	0.31	0.41	0.16	0.35	0.030
800280	S	VRS1	28	1.07	1.14	0.18	0.30	0.16	0.24	0.030
800281	S	VRS2	28	1.07	1.14	0.31	0.41	0.16	0.35	0.030
800284	V	VRS1	28	1.07	1.14	0.18	0.30	0.16	0.24	0.030
800285	V	VRS2	28	1.07	1.14	0.31	0.41	0.16	0.35	0.030
800300	S	VRS1	30	1.14	1.22	0.18	0.30	0.16	0.24	0.030
800301	S	VRS2	30	1.14	1.22	0.31	0.41	0.16	0.35	0.030
800304	V	VRS1	30	1.14	1.22	0.18	0.30	0.16	0.24	0.030
800305	V	VRS2	30	1.14	1.22	0.31	0.41	0.16	0.35	0.030
800320	S	VRS1	32	1.22	1.30	0.18	0.30	0.16	0.24	0.030
800321	S	VRS2	32	1.22	1.30	0.31	0.41	0.16	0.35	0.030
800324	V	VRS1	32	1.22	1.30	0.18	0.30	0.16	0.24	0.030
800325	V	VRS2	32	1.22	1.30	0.31	0.41	0.16	0.35	0.030
800350	S	VRS1	35	1.30	1.42	0.18	0.30	0.16	0.24	0.030
800351	S	VRS2	35	1.30	1.42	0.31	0.41	0.16	0.35	0.030
800354	V	VRS1	35	1.30	1.42	0.18	0.30	0.16	0.24	0.030
800355	V	VRS2	36	1.30	1.42	0.31	0.41	0.16	0.35	0.030
800380	S	VRS1	38	1.42	1.50	0.18	0.30	0.16	0.24	0.030
800381	S	VRS2	38	1.42	1.50	0.31	0.41	0.16	0.35	0.030
800384	V	VRS1	38	1.42	1.50	0.18	0.30	0.16	0.24	0.030
800385	V	VRS2	38	1.42	1.50	0.31	0.41	0.16	0.35	0.030
800400	S	VRS1	40	1.50	1.70	0.21	0.35	0.20	0.28	0.040
800401	S	VRS2	40	1.50	1.70	0.37	0.51	0.20	0.43	0.040

Select the larger V-Seal when the dimension d1 is on the boundary between two sizes. All dimensions in inches unless noted.

Part No.	Mat'l Code	Style	Shaft Size Metric (d1)	Shaft Size Inch Min. (d1)	Shaft Size Inch Max. (d1)	Width On Shaft (A)	Overall Width (B)	Height (c)	Fitted Width (B1)	Width Tolerance (+/-)
800404	V	VRS1	40	1.50	1.70	0.21	0.35	0.20	0.28	0.040
800405	V	VRS2	40	1.50	1.70	0.37	0.51	0.20	0.43	0.040
800450	S	VRS1	45	1.70	1.89	0.21	0.35	0.20	0.28	0.040
800451	S	VRS2	45	1.70	1.89	0.37	0.51	0.20	0.43	0.040
800454	V	VRS1	45	1.70	1.89	0.21	0.35	0.20	0.28	0.040
800455	V	VRS2	45	1.70	1.89	0.37	0.51	0.20	0.43	0.040
800500	S	VRS1	50	1.89	2.09	0.21	0.35	0.20	0.28	0.040
800501	S	VRS2	50	1.89	2.09	0.37	0.51	0.20	0.43	0.040
800504	V	VRS1	50	1.89	2.09	0.21	0.35	0.20	0.28	0.040
800505	V	VRS2	50	1.89	2.09	0.37	0.51	0.20	0.43	0.040
800550	S	VRS1	55	2.09	2.29	0.21	0.35	0.20	0.28	0.040
800551	S	VRS2	55	2.09	2.29	0.37	0.51	0.20	0.43	0.040
800554	V	VRS1	55	2.09	2.29	0.21	0.35	0.20	0.28	0.040
800555	V	VRS2	55	2.09	2.29	0.37	0.51	0.20	0.43	0.040
800600	S	VRS1	60	2.29	2.48	0.21	0.35	0.20	0.28	0.040
800601	S	VRS2	60	2.29	2.48	0.37	0.51	0.20	0.43	0.040
800604	V	VRS1	60	2.29	2.48	0.21	0.35	0.20	0.28	0.040
800605	V	VRS2	60	2.29	2.48	0.37	0.51	0.20	0.43	0.040
800650	S	VRS1	65	2.48	2.68	0.21	0.35	0.20	0.28	0.040
800651	S	VRS2	65	2.48	2.68	0.37	0.51	0.20	0.43	0.040
800654	V	VRS1	65	2.48	2.68	0.21	0.35	0.20	0.28	0.040
800655	V	VRS2	65	2.48	2.68	0.37	0.51	0.20	0.43	0.040
800700	S	VRS1	70	2.68	2.88	0.26	0.43	0.24	0.35	0.050
800701	S	VRS2	70	2.68	2.88	0.44	0.61	0.24	0.53	0.050
800704	V	VRS1	70	2.68	2.88	0.26	0.43	0.24	0.35	0.050
800705	V	VRS2	70	2.68	2.88	0.44	0.61	0.24	0.53	0.050
800750	S	VRS1	75	2.88	3.07	0.26	0.43	0.24	0.35	0.050
800751	S	VRS2	75	2.88	3.07	0.44	0.61	0.24	0.53	0.050
800754	V	VRS1	75	2.88	3.07	0.26	0.43	0.24	0.35	0.050
800755	V	VRS2	75	2.88	3.07	0.44	0.61	0.24	0.53	0.050
800800	S	VRS1	80	3.07	3.27	0.26	0.43	0.24	0.35	0.050
800801	S	VRS2	80	3.07	3.27	0.44	0.61	0.24	0.53	0.050
800804	V	VRS1	80	3.07	3.27	0.26	0.43	0.24	0.35	0.050
800805	V	VRS2	80	3.07	3.27	0.44	0.61	0.24	0.53	0.050
800850	S	VRS1	85	3.27	3.47	0.26	0.43	0.24	0.35	0.050
800851	S	VRS2	85	3.27	3.47	0.44	0.61	0.24	0.53	0.050
800854	V	VRS1	85	3.27	3.47	0.26	0.43	0.24	0.35	0.050
800855	V	VRS2	85	3.27	3.47	0.44	0.61	0.24	0.53	0.050
800900	S	VRS1	90	3.47	3.66	0.26	0.43	0.24	0.35	0.050
800901	S	VRS2	90	3.47	3.66	0.44	0.61	0.24	0.53	0.050
800904	V	VRS1	90	3.47	3.66	0.26	0.43	0.24	0.35	0.050
800905	V	VRS2	90	3.47	3.66	0.44	0.61	0.24	0.53	0.050
800950	S	VRS1	95	3.66	3.86	0.26	0.43	0.24	0.35	0.050
800951	S	VRS2	95	3.66	3.86	0.44	0.61	0.24	0.53	0.050
800954	V	VRS1	95	3.66	3.86	0.26	0.43	0.24	0.35	0.050
800955	V	VRS2	95	3.66	3.86	0.44	0.61	0.24	0.53	0.050
801000	S	VRS1	100	3.86	4.14	0.26	0.43	0.24	0.35	0.050
801001	S	VRS2	100	3.86	4.14	0.44	0.61	0.24	0.53	0.050
801004	V	VRS1	100	3.86	4.14	0.26	0.43	0.24	0.35	0.050
801005	V	VRS2	100	3.86	4.14	0.44	0.61	0.24	0.53	0.050
801100	S	VRS1	110	4.14	4.53	0.31	0.50	0.28	0.41	0.060
801101	S	VRS2	110	4.14	4.53	0.52	0.71	0.28	0.61	0.060
801104	V	VRS1	110	4.14	4.53	0.31	0.50	0.28	0.41	0.060
801105	V	VRS2	110	4.14	4.53	0.52	0.71	0.28	0.61	0.060
801200	S	VRS1	120	4.53	4.92	0.31	0.50	0.28	0.41	0.060
801201	S	VRS2	120	4.53	4.92	0.52	0.71	0.28	0.61	0.060
801204	V	VRS1	120	4.53	4.92	0.31	0.50	0.28	0.41	0.060
801205	V	VRS2	120	4.53	4.92	0.52	0.71	0.28	0.61	0.060
801300	S	VRS1	130	4.92	5.32	0.31	0.50	0.28	0.41	0.060
801301	S	VRS2	130	4.92	5.32	0.52	0.71	0.28	0.61	0.060
801304	V	VRS1	130	4.92	5.32	0.31	0.50	0.28	0.41	0.060
801305	V	VRS2	130	4.92	5.32	0.52	0.71	0.28	0.61	0.060
801400	S	VRS1	140	5.32	5.71	0.31	0.50	0.28	0.41	0.060
801401	S	VRS2	140	5.32	5.71	0.52	0.71	0.28	0.61	0.060
801402	S	VRS3	140	5.32	5.71	0.24	0.41	0.26	0.31	0.060
801404	V	VRS1	140	5.32	5.71	0.31	0.50	0.28	0.41	0.060
801405	V	VRS2	140	5.32	5.71	0.52	0.71	0.28	0.61	0.060
801406	V	VRS3	140	5.32	5.71	0.24	0.41	0.26	0.31	0.060
801500	S	VRS1	150	5.71	6.10	0.31	0.50	0.28	0.41	0.060
801501	S	VRS2	150	5.71	6.10	0.52	0.71	0.28	0.61	0.060
801502	S	VRS3	150	5.71	6.10	0.24	0.41	0.26	0.31	0.060
801504	V	VRS1	150	5.71	6.10	0.31	0.50	0.28	0.41	0.060
801505	V	VRS2	150	5.71	6.10	0.52	0.71	0.28	0.61	0.060
801506	V	VRS3	150	5.71	6.10	0.24	0.41	0.26	0.31	0.060
801600	S	VRS1	160	6.10	6.50	0.35	0.57	0.32	0.47	0.070
801601	S	VRS2	160	6.10	6.50	0.59	0.81	0.32	0.71	0.070

Select the larger V-Seal when the dimension d1 is on the boundary between two sizes. All dimensions in inches unless noted.

Part No.	Mat'l Code	Style	Shaft Size Metric (d1)	Shaft Size Inch Min. (d1)	Shaft Size Inch Max. (d1)	Width On Shaft (A)	Overall Width (B)	Height (c)	Fitted Width (B1)	Width Tolerance (+/-)
801602	S	VRS3	160	6.10	6.50	0.24	0.41	0.26	0.31	0.060
801604	V	VRS1	160	6.10	6.50	0.35	0.57	0.32	0.47	0.070
801605	V	VRS2	160	6.10	6.50	0.59	0.81	0.32	0.71	0.070
801606	V	VRS3	160	6.10	6.50	0.24	0.41	0.26	0.31	0.060
801700	S	VRS1	170	6.50	6.89	0.35	0.57	0.32	0.47	0.070
801701	S	VRS2	170	6.50	6.89	0.59	0.81	0.32	0.71	0.070
801702	S	VRS3	170	6.50	6.89	0.24	0.41	0.26	0.31	0.060
801704	V	VRS1	170	6.50	6.89	0.35	0.57	0.32	0.47	0.070
801705	V	VRS2	170	6.50	6.89	0.59	0.81	0.32	0.71	0.070
801706	V	VRS3	170	6.50	6.89	0.24	0.41	0.26	0.31	0.060
801800	S	VRS1	180	6.89	7.29	0.35	0.57	0.32	0.47	0.070
801801	S	VRS2	180	6.89	7.29	0.59	0.81	0.32	0.71	0.070
801802	S	VRS3	180	6.89	7.29	0.24	0.41	0.26	0.31	0.060
801804	V	VRS1	180	6.89	7.29	0.35	0.57	0.32	0.47	0.070
801805	V	VRS2	180	6.89	7.29	0.59	0.81	0.32	0.71	0.070
801806	V	VRS3	180	6.89	7.29	0.24	0.41	0.26	0.31	0.060
801900	S	VRS1	190	7.29	7.68	0.35	0.57	0.32	0.47	0.070
801901	S	VRS2	190	7.29	7.68	0.59	0.81	0.32	0.71	0.070
801902	S	VRS3	190	7.29	7.68	0.24	0.41	0.26	0.31	0.060
801904	V	VRS1	190	7.29	7.68	0.35	0.57	0.32	0.47	0.070
801905	V	VRS2	190	7.29	7.68	0.59	0.81	0.32	0.71	0.070
801906	V	VRS3	190	7.29	7.68	0.24	0.41	0.26	0.31	0.060
801990	S	VRS1	199	7.68	8.27	0.35	0.57	0.32	0.47	0.070
801991	S	VRS2	199	7.68	8.27	0.59	0.81	0.32	0.71	0.070
801994	V	VRS1	199	7.68	8.27	0.35	0.57	0.32	0.47	0.070
801995	V	VRS2	199	7.68	8.27	0.59	0.81	0.32	0.71	0.070
802000	S	VRS1	200	7.48	8.27	0.56	0.98	0.59	0.79	0.160
802002	S	VRS3	200	7.48	8.27	0.24	0.41	0.26	0.31	0.060
802004	V	VRS1	200	7.48	8.27	0.56	0.98	0.59	0.79	0.160
802006	V	VRS3	200	7.48	8.27	0.24	0.41	0.26	0.31	0.060
802200	S	VRS1	220	8.27	9.25	0.56	0.98	0.59	0.79	0.160
802202	S	VRS3	220	8.27	9.25	0.24	0.41	0.26	0.31	0.060
802204	V	VRS1	220	8.27	9.25	0.56	0.98	0.59	0.79	0.160
802206	V	VRS3	220	8.27	9.25	0.24	0.41	0.26	0.31	0.060
802500	S	VRS1	250	9.25	10.43	0.56	0.98	0.59	0.79	0.160
802502	S	VRS3	250	9.25	10.43	0.24	0.41	0.26	0.31	0.060
802504	V	VRS1	250	9.25	10.43	0.56	0.98	0.59	0.79	0.160
802506	V	VRS3	250	9.25	10.43	0.24	0.41	0.26	0.31	0.060
802750	S	VRS1	275	10.43	11.42	0.56	0.98	0.59	0.79	0.160
802752	S	VRS3	275	10.43	11.42	0.24	0.41	0.26	0.31	0.060
802754	V	VRS1	275	10.43	11.42	0.56	0.98	0.59	0.79	0.160
802756	V	VRS3	275	10.43	11.42	0.24	0.41	0.26	0.31	0.060
803000	S	VRS1	300	11.42	12.20	0.56	0.98	0.59	0.79	0.160
803002	S	VRS3	300	11.42	12.20	0.24	0.41	0.26	0.31	0.060
803004	V	VRS1	300	11.42	12.20	0.56	0.98	0.59	0.79	0.160
803006	V	VRS3	300	11.42	12.20	0.24	0.41	0.26	0.31	0.060
803250	S	VRS1	325	12.20	13.19	0.56	0.98	0.59	0.79	0.160
803252	S	VRS3	325	12.20	13.19	0.24	0.41	0.26	0.31	0.060
803254	V	VRS1	325	12.20	13.19	0.56	0.98	0.59	0.79	0.160
803256	V	VRS3	325	12.20	13.19	0.24	0.41	0.26	0.31	0.060
803500	S	VRS1	350	13.19	14.37	0.56	0.98	0.59	0.79	0.160
803502	S	VRS3	350	13.19	14.37	0.24	0.41	0.26	0.31	0.060
803504	V	VRS1	350	13.19	14.37	0.56	0.98	0.59	0.79	0.160
803506	V	VRS3	350	13.19	14.37	0.24	0.41	0.26	0.31	0.060
803750	S	VRS1	375	14.37	15.35	0.56	0.98	0.59	0.79	0.160
803752	S	VRS3	375	14.37	15.35	0.24	0.41	0.26	0.31	0.060
803754	V	VRS1	375	14.37	15.35	0.56	0.98	0.59	0.79	0.160
803756	V	VRS3	375	14.37	15.35	0.24	0.41	0.26	0.31	0.060
804000	S	VRS1	400	15.35	16.93	0.56	0.98	0.59	0.79	0.160
804002	S	VRS3	400	15.35	16.93	0.24	0.41	0.26	0.31	0.060
804004	V	VRS1	400	15.35	16.93	0.56	0.98	0.59	0.79	0.160
804006	V	VRS3	400	15.35	16.93	0.24	0.41	0.26	0.31	0.060
804500	S	VRS1	450	16.93	18.90	0.56	0.98	0.59	0.79	0.160
804502	S	VRS3	450	16.93	18.90	0.24	0.41	0.26	0.31	0.060
804503	S	VRS4	450	17.72	17.91	0.56	0.98	0.59	0.79	0.160
804504	V	VRS1	450	16.93	18.90	0.56	0.98	0.59	0.79	0.160
804506	V	VRS3	450	16.93	18.90	0.24	0.41	0.26	0.31	0.060
805000	S	VRS1	500	18.90	20.87	0.56	0.98	0.59	0.79	0.160
805002	S	VRS3	500	18.90	20.87	0.24	0.41	0.26	0.31	0.060
805003	S	VRS4	500	19.69	19.88	0.56	0.98	0.59	0.79	0.160
805004	V	VRS1	500	18.90	20.87	0.56	0.98	0.59	0.79	0.160
805103	S	VRS4	510	20.08	20.28	0.56	0.98	0.59	0.79	0.160
805203	S	VRS4	520	20.47	20.67	0.56	0.98	0.59	0.79	0.160
805303	S	VRS4	530	20.87	21.06	0.56	0.98	0.59	0.79	0.160
805403	S	VRS4	540	21.26	21.46	0.56	0.98	0.59	0.79	0.160
805500	S	VRS1	550	20.87	22.83	0.56	0.98	0.59	0.79	0.160

Select the larger V-Seal when the dimension d1 is on the boundary between two sizes. All dimensions in inches unless noted.

Part No.	Mat'l Code	Style	Shaft Size Metric (d1)	Shaft Size Inch Min. (d1)	Shaft Size Inch Max. (d1)	Width On Shaft (A)	Overall Width (B)	Height (c)	Fitted Width (B1)	Width Tolerance (+/-)
805502	S	VRS3	550	20.87	22.83	0.24	0.41	0.26	0.31	0.060
805503	S	VRS4	550	21.65	21.85	0.56	0.98	0.59	0.79	0.160
805504	V	VRS1	550	20.87	22.83	0.56	0.98	0.59	0.79	0.160
805603	S	VRS4	560	22.05	22.24	0.56	0.98	0.59	0.79	0.160
805703	S	VRS4	570	22.44	22.64	0.56	0.98	0.59	0.79	0.160
805803	S	VRS4	580	22.84	23.03	0.56	0.98	0.59	0.79	0.160
805903	S	VRS4	590	23.23	23.62	0.56	0.98	0.59	0.79	0.160
806000	S	VRS1	600	22.83	24.80	0.56	0.98	0.59	0.79	0.160
806002	S	VRS3	600	22.83	24.80	0.24	0.41	0.26	0.31	0.060
806003	S	VRS4	600	23.62	24.02	0.56	0.98	0.59	0.79	0.160
806004	V	VRS1	600	22.83	24.80	0.56	0.98	0.59	0.79	0.160
806103	S	VRS4	610	24.02	24.41	0.56	0.98	0.59	0.79	0.160
806203	S	VRS4	620	24.41	24.80	0.56	0.98	0.59	0.79	0.160
806303	S	VRS4	630	24.80	25.20	0.56	0.98	0.59	0.79	0.160
806403	S	VRS4	640	25.20	25.59	0.56	0.98	0.59	0.79	0.160
806500	S	VRS1	650	24.80	26.18	0.56	0.98	0.59	0.79	0.160
806503	S	VRS4	650	25.59	25.98	0.56	0.98	0.59	0.79	0.160
806903	S	VRS4	690	27.10	27.50	0.56	0.98	0.59	0.79	0.160
807000	S	VRS1	700	26.18	27.76	0.56	0.98	0.59	0.79	0.160
807003	S	VRS4	700	27.56	27.95	0.56	0.98	0.59	0.79	0.160
807250	S	VRS1	725	27.76	29.33	0.56	0.98	0.59	0.79	0.160
807500	S	VRS1	750	29.33	30.91	0.56	0.98	0.59	0.79	0.160
807503	S	VRS4	750	29.53	29.84	0.56	0.98	0.59	0.79	0.160
807803	S	VRS4	780	30.40	30.80	0.56	0.98	0.59	0.79	0.160
808000	S	VRS1	800	30.91	32.68	0.56	0.98	0.59	0.79	0.160
808003	S	VRS4	800	31.18	31.54	0.56	0.98	0.59	0.79	0.160
808203	S	VRS4	820	31.50	33.26	0.56	0.98	0.59	0.79	0.160
808500	S	VRS1	850	32.68	34.45	0.56	0.98	0.59	0.79	0.160
808503	S	VRS4	850	33.11	33.50	0.56	0.98	0.59	0.79	0.160
809000	S	VRS1	900	34.45	36.22	0.56	0.98	0.59	0.79	0.160
809003	S	VRS4	900	35.12	35.91	0.56	0.98	0.59	0.79	0.160
809500	S	VRS1	950	36.22	37.99	0.56	0.98	0.59	0.79	0.160
809503	S	VRS4	950	37.17	37.60	0.56	0.98	0.59	0.79	0.160
810000	S	VRS1	1000	37.99	39.96	0.56	0.98	0.59	0.79	0.160
810003	S	VRS4	1000	39.33	39.76	0.56	0.98	0.59	0.79	0.160
810500	S	VRS1	1050	39.96	41.93	0.56	0.98	0.59	0.79	0.160
810603	S	VRS4	1060	41.10	41.90	0.56	0.98	0.59	0.79	0.160
811000	S	VRS1	1100	41.93	43.90	0.56	0.98	0.59	0.79	0.160
811003	S	VRS4	1100	42.72	43.50	0.56	0.98	0.59	0.79	0.160
811500	S	VRS1	1150	43.90	45.87	0.56	0.98	0.59	0.79	0.160
812000	S	VRS1	1200	45.87	47.84	0.56	0.98	0.59	0.79	0.160
812003	S	VRS4	1200	46.65	47.44	0.56	0.98	0.59	0.79	0.160
812500	S	VRS1	1250	47.84	50.00	0.56	0.98	0.59	0.79	0.160
813000	S	VRS1	1300	50.00	51.97	0.56	0.98	0.59	0.79	0.160
813003	S	VRS4	1300	50.98	51.77	0.56	0.98	0.59	0.79	0.160
813500	S	VRS1	1300	51.97	53.94	0.56	0.98	0.59	0.79	0.160
813503	S	VRS4	1350	52.76	53.74	0.56	0.98	0.59	0.79	0.160
814000	S	VRS1	1400	53.94	55.91	0.56	0.98	0.59	0.79	0.160
814003	S	VRS4	1400	54.72	55.71	0.56	0.98	0.59	0.79	0.160
814500	S	VRS1	1450	55.91	57.87	0.56	0.98	0.59	0.79	0.160
814503	S	VRS4	1450	56.69	57.68	0.56	0.98	0.59	0.79	0.160
815000	S	VRS1	1500	57.87	59.84	0.56	0.98	0.59	0.79	0.160
815003	S	VRS4	1500	58.66	59.65	0.56	0.98	0.59	0.79	0.160
815500	S	VRS1	1550	59.84	61.81	0.56	0.98	0.59	0.79	0.160
815503	S	VRS4	1550	60.63	61.81	0.56	0.98	0.59	0.79	0.160
816000	S	VRS1	1600	61.81	63.78	0.56	0.98	0.59	0.79	0.160
816003	S	VRS4	1600	62.99	64.57	0.56	0.98	0.59	0.79	0.160
816500	S	VRS1	1650	63.78	65.75	0.56	0.98	0.59	0.79	0.160
816503	S	VRS4	1650	64.57	66.14	0.56	0.98	0.59	0.79	0.160
817000	S	VRS1	1700	65.75	67.72	0.56	0.98	0.59	0.79	0.160
817003	S	VRS4	1700	66.15	67.72	0.56	0.98	0.59	0.79	0.160
817500	S	VRS1	1750	67.72	69.69	0.56	0.98	0.59	0.79	0.160
817503	S	VRS4	1750	67.72	69.49	0.56	0.98	0.59	0.79	0.160
818000	S	VRS1	1800	69.69	71.65	0.56	0.98	0.59	0.79	0.160
818003	S	VRS4	1800	69.49	71.26	0.56	0.98	0.59	0.79	0.160
818500	S	VRS1	1850	71.65	73.62	0.56	0.98	0.59	0.79	0.160
818503	S	VRS4	1850	71.26	73.03	0.56	0.98	0.59	0.79	0.160
819000	S	VRS1	1900	73.62	75.59	0.56	0.98	0.59	0.79	0.160
819003	S	VRS4	1900	73.03	75.00	0.56	0.98	0.59	0.79	0.160
819500	S	VRS1	1950	75.59	77.56	0.56	0.98	0.59	0.79	0.160
819503	S	VRS4	1950	75.00	76.97	0.56	0.98	0.59	0.79	0.160
819990	S	VRS1	1999	77.56	79.53	0.56	0.98	0.59	0.79	0.160
820003	S	VRS4	2000	76.90	79.10	0.56	0.98	0.59	0.79	0.160

Select the larger V-Seal when the dimension d1 is on the boundary between two sizes. All dimensions in inches unless noted.

Metric List Sizes & Type

Shaft Size	Hsg. Bore	Seal O.D.	Seal Width	Grp.	Part No.	Lip Mat'l	Illus./ Type
4,50	15,80	16,00	5,00	A	*4.5X16X5	S	32
4,50	15,80	16,00	7,00	A	*4.5X16X7	S	32
4,50	16,80	17,00	7,00	A	*4.5X17X7	S	32
4,80	14,80	15,00	5,00	A	*4.8X15X5	S	32
5,00	14,80	15,00	6,00	A	*5X15X6	S	32
5,00	15,80	16,00	6,00	A	*5X16X6	S	32
5,00	16,00	16,20	5,00	A	*5X16X5	S	32
5,00	16,80	17,00	7,00	A	*5X17X7	S	32
5,00	17,80	18,00	6,00	A	*5X18X6	S	32
5,00	17,80	18,00	7,00	A	*5X18X7	S	32
5,00	17,80	18,00	10,00	A	*5X18X10	S	32
5,00	18,80	19,00	7,00	A	*5X19X7	S	32
5,00	21,80	22,00	7,00	A	*5X22X7	S	32
5,50	17,80	18,00	8,00	A	*5.5X18X8	S	32
5,50	21,80	22,00	8,00	A	*5.5X22X8	S	32
6,00	16,00	16,20	5,00	A	6X16X5	S	35
6,00	16,00	16,20	7,00	A	*6X16X7V	V	35
6,00	16,00	16,28	7,00	A	6X16X7	S	35
6,00	16,80	17,00	7,00	A	*6X17X7	S	32
6,00	17,80	18,00	6,00	A	*6X18X6	S	32
6,00	17,80	18,00	7,00	A	*6X18X7	S	32
6,00	18,80	19,00	7,00	A	*6X19X7	S	32
6,00	19,80	20,00	5,50	A	*6X20X5.5	S	32
6,00	20,80	21,00	7,00	A	*6X21X7	S	32
6,00	22,00	22,28	7,00	A	6X22X7	S	35
6,00	25,80	26,00	7,00	A	*6X26X7	S	32
6,00	34,80	35,00	7,00	A	*6X35X7	S	32
6,50	14,30	14,50	7,00	A	*6.5X14.5X7	S	32
6,80	21,80	22,00	7,00	A	*6.8X22X7	S	32
7,00	16,00	16,20	7,00	A	*7X16X7V	V	35
7,00	16,00	16,28	7,00	A	7X16X7	S	32
7,00	16,80	17,00	7,00	A	*7X17X7	S	32
7,00	17,80	18,00	7,00	A	*7X18X7	S	32
7,00	18,80	19,00	7,00	A	*7X19X7	S	32
7,00	21,80	22,00	6,00	A	*7X22X6	S	32
7,00	21,80	22,00	8,00	A	*7X22X8	S	32
7,00	22,00	22,28	7,00	A	7X22X7	S	35
7,00	30,80	31,00	7,00	A	*7X31X7	S	32
8,00	13,80	14,00	7,00	A	*8X14X7	S	32
8,00	14,00	14,20	4,00	A	8X14X4	S	35
8,00	14,00	14,20	5,00	A	*8X14X5	S	32
8,00	14,80	15,00	5,00	A	*8X15X5	S	32
8,00	15,80	16,00	5,00	A	*8X16X5	S	32
8,00	15,80	16,00	6,00	A	*8X16X6	S	32
8,00	16,00	16,20	7,00	A	220860	S	35
8,00	16,00	16,23	7,00	A	8X16X7	S	35
8,00	16,80	17,00	7,00	A	*8X17X7	S	32
8,00	17,80	18,00	6,00	A	*8X18X6	S	32
8,00	17,80	18,00	8,00	A	*8X18X8	S	32
8,00	18,00	18,20	5,00	A	8X18X5	S	35
8,00	18,00	18,20	7,00	A	8X18X7	S	32
8,00	18,00	18,20	7,00	A	220818	S	32
8,00	18,80	19,00	7,00	A	*8X19X7	S	32
8,00	19,80	20,00	7,00	A	*8X20X7	S	32
8,00	21,80	22,00	6,00	A	*8X22X6	S	32
8,00	22,00	22,20	7,00	A	*8X22X7V	V	32
8,00	22,00	22,28	7,00	A	8X22X7	S	32
8,00	22,80	23,00	5,00	A	*8X23X5	S	32
8,00	24,00	24,28	7,00	A	8X24X7	S	35
8,00	24,80	25,00	7,00	A	*8X25X7	S	32
8,00	24,80	25,00	8,00	A	*8X25X8	S	32
8,00	24,80	25,00	9,00	A	*8X25X9	S	32
8,00	25,80	26,00	7,00	A	*8X26X7	S	32
8,00	29,80	30,00	6,00	A	*8X30X6	S	32
8,00	29,80	30,00	7,00	A	*8X30X7	S	32
8,00	33,80	34,00	8,00	A	*8X34X8	S	32
8,85	16,80	17,00	5,00	A	*8.85X17X5	S	32
8,85	19,80	20,00	5,00	A	*8.85X20X5	S	32
9,00	15,80	16,00	5,50	A	*9X16X5.5	S	32
9,00	18,00	18,20	7,00	A	9X18X7	S	35
9,00	18,00	18,20	7,00	A	220918	S	35
9,00	18,80	19,00	5,00	A	*9X19X5	S	32
9,00	18,80	19,00	7,00	A	*9X19X7	S	32
9,00	19,80	20,00	7,00	A	*9X20X7	S	32
9,00	22,00	22,20	7,00	A	9X22X7	S	35
9,00	22,00	22,20	7,00	A	*9X22X7V	V	35
9,00	24,00	24,28	7,00	A	9X24X7	S	35
9,00	24,80	25,00	7,00	A	*9X25X7	S	32
9,00	26,00	26,28	7,00	A	9X26X7	S	35
9,00	28,80	29,00	7,00	A	*9X29X7	S	32
9,00	29,80	30,00	7,00	A	*9X30X7	S	32
10,00	15,80	16,00	4,00	A	*10X16X4	S	32
10,00	15,80	16,00	4,50	A	*10X16X4.5	S	32
10,00	16,80	17,00	5,00	A	*10X17X5	S	32
10,00	16,80	17,00	7,00	A	*10X17X7	S	32
10,00	17,80	18,00	4,00	A	*10X18X4	S	32
10,00	17,80	18,00	5,00	A	*10X18X5	S	32
10,00	17,80	18,00	6,00	A	*10X18X6	S	32
10,00	17,80	18,00	7,00	A	*10X18X7	S	32
10,00	19,00	19,20	7,00	A	10X19X7	S	35
10,00	19,00	19,20	7,00	A	221040	S	35
10,00	19,80	20,00	5,00	A	*10X20X5	S	32
10,00	19,80	20,00	6,00	A	*10X20X6	S	32
10,00	19,80	20,00	7,00	A	*10X20X7	S	32
10,00	20,80	21,00	4,00	A	*10X21X4	S	32
10,00	20,80	21,00	6,00	A	*10X21X6	S	32
10,00	20,80	21,00	7,00	A	*10X21X7	S	32
10,00	21,80	22,00	5,00	A	*10X22X5	S	32
10,00	21,80	22,00	6,00	A	*10X22X6	S	32
10,00	22,00	22,20	7,00	A	*10X22X7V	V	35
10,00	22,00	22,28	7,00	A	10X22X7	S	32
10,00	22,80	23,00	7,00	A	*10X23X7	S	32
10,00	22,80	23,00	8,00	A	*10X23X8	S	32
10,00	23,30	23,50	10,00	A	*10X23.5X10	S	32
10,00	23,80	24,00	6,00	A	*10X24X6	S	32
10,00	24,00	24,23	7,00	A	10X24X7	S	35
10,00	24,80	25,00	5,00	A	*10X25X5	S	32
10,00	24,80	25,00	10,00	A	*10X25X10	S	32
10,00	25,00	25,28	7,00	A	10X25X7	S	32
10,00	25,80	26,00	8,00	A	*10X26X8	S	32
10,00	26,00	26,23	7,00	A	10X26X7	S	32
10,00	27,80	28,00	7,00	A	*10X28X7	S	32
10,00	27,80	28,00	8,00	A	*10X28X8	S	32
10,00	29,80	30,00	7,00	A	*10X30X7	S	32
10,00	29,80	30,00	10,00	A	*10X30X10	S	32
11,00	17,00	17,25	4,00	A	11X17X4	S	32
11,00	20,80	21,00	7,00	A	*11X21X7	S	32

For Illustration and Material Data See Technical Section

* The U.S. customer service number is 877-4-TIMKEN. The Canadian customer service numbers are 800-565-4927 (English) and 800-565-0438 (French-Canadian).

Shaft Size	Hsg. Bore	Seal O.D.	Seal Width	Grp.	Part No.	Lip Mat'l	Illus./ Type
11,00	20,80	21,00	8,00	A	* 11X21X8	S	32
11,00	22,00	22,23	7,00	A	221122	S	35
11,00	22,00	22,28	7,00	A	11X22X7	S	35
11,00	22,80	23,00	7,00	A	* 11X23X7	S	32
11,00	23,30	23,50	7,00	A	* 11X23.5X7	S	32
11,00	24,80	25,00	7,00	A	* 11X25X7	S	32
11,00	26,00	26,28	7,00	A	11X26X7	S	35
11,00	27,80	28,00	7,00	A	* 11X28X7	S	32
11,00	28,80	29,00	7,00	A	* 11X29X7	S	32
11,00	29,80	30,00	10,00	A	* 11X30X10	S	32
11,00	30,00	30,20	7,00	A	11X30X7	S	32
11,60	18,80	19,00	6,00	A	* 11.6X19X6	S	32
11,60	23,80	24,00	10,00	A	* 11.6X24X10	S	32
12,00	17,80	18,00	5,00	A	* 12X18X5	S	32
12,00	18,80	19,00	7,00	A	* 12X19X7	S	32
12,00	19,00	19,20	5,00	A	12X19X5	S	32
12,00	19,80	20,00	4,00	A	* 12X20X4	S	32
12,00	19,80	20,00	6,00	A	* 12X20X6	S	32
12,00	19,80	20,00	7,00	A	* 12X20X7	S	32
12,00	20,00	20,28	5,00	A	12X20X5	S	32
12,00	20,80	21,00	4,00	A	* 12X21X4	S	32
12,00	20,80	21,00	7,00	A	* 12X21X7	S	32
12,00	21,80	22,00	5,00	A	* 12X22X5	S	32
12,00	21,80	22,00	6,50	A	* 12X22X6.5	S	32
12,00	21,80	22,00	8,00	A	* 12X22X8	S	32
12,00	21,80	22,00	9,00	A	* 12X22X9	S	32
12,00	22,00	22,20	7,00	A	* 12X22X7V	V	35
12,00	22,00	22,25	7,00	A	12X22X7	S	35
12,00	22,00	22,25	7,00	A	221207	S	35
12,00	22,00	22,25	7,00	A	221208	V	35
12,00	22,80	23,00	7,00	A	* 12X23X7	S	32
12,00	23,30	23,50	7,00	A	* 12X23.5X7	S	32
12,00	23,80	24,00	8,00	A	* 12X24X8	S	32
12,00	24,00	24,23	7,00	A	12X24X7	S	32
12,00	24,80	25,00	8,00	A	* 12X25X8	S	32
12,00	24,80	25,00	10,00	A	* 12X25X10	S	32
12,00	25,00	25,20	4,50	A	12X25X4.5	S	32
12,00	25,00	25,25	7,00	A	12X25X7	S	48
12,00	25,30	25,50	7,00	A	* 12X25.5X7	S	32
12,00	25,80	26,00	8,00	A	* 12X26X8	S	32
12,00	26,00	26,20	7,00	A	12X26X7	S	32
12,00	26,80	27,00	9,00	A	* 12X27X9	S	32
12,00	27,00	27,20	7,00	A	* 12X27X7	S	32
12,00	27,80	28,00	8,00	A	* 12X28X8	S	32
12,00	28,00	28,20	7,00	A	12X28X7	S	35
12,00	28,00	28,20	7,00	A	* 12X28X7V	V	35
12,00	28,30	28,50	7,00	A	* 12X28.5X7	S	32
12,00	29,80	30,00	5,00	A	* 12X30X5	S	32
12,00	29,80	30,00	9,00	A	* 12X30X9	S	32
12,00	29,80	30,00	10,00	A	* 12X30X10	S	32
12,00	30,00	30,20	7,00	A	12X30X7	S	35
12,00	30,00	30,20	7,00	A	* 12X30X7V	V	35
12,00	31,80	32,00	5,00	A	* 12X32X5	S	32
12,00	31,80	32,00	10,00	A	* 12X32X10	S	32
12,00	32,00	32,20	7,00	A	12X32X7	S	35
12,00	34,80	35,00	10,00	A	* 12X35X10	S	32
12,00	35,00	35,20	7,00	A	12X35X7	S	32
12,00	36,80	37,00	7,00	A	* 12X37X7	S	32
12,45	21,80	22,00	7,00	A	* 12.45X22X7	S	32
12,50	21,80	22,00	6,00	A	* 12.5X22X6	S	32
12,50	23,30	23,50	8,00	A	* 12.5X23.5X8	S	32
12,50	23,30	23,50	10,00	A	* 12.5X23.5X10	S	32
12,50	24,80	25,00	8,00	A	* 12.5X25X8	S	32
12,50	28,30	28,50	7,00	A	* 12.5X28.5X7	S	32
13,00	19,80	20,00	5,00	A	* 13X20X5	S	32
13,00	21,80	22,00	5,00	A	* 13X22X5	S	32
13,00	21,80	22,00	7,00	A	* 13X22X7	S	32
13,00	22,00	22,20	6,00	A	13X22X6	S	32
13,00	22,00	22,20	6,00	A	710348	S	32
13,00	22,80	23,00	7,00	A	* 13X23X7	S	32
13,00	23,80	24,00	7,00	A	* 13X24X7	S	32
13,00	24,80	25,00	5,00	A	* 13X25X5	S	32
13,00	24,80	25,00	7,00	A	* 13X25X7	S	32
13,00	25,80	26,00	9,00	A	* 13X26X9	S	32
13,00	26,00	26,20	7,00	A	13X26X7	S	32
13,00	27,00	27,20	7,00	A	* 13X27X7	S	32
13,00	28,00	28,20	7,00	A	13X28X7	S	32
13,00	29,80	30,00	8,00	A	* 13X30X8	S	32
13,00	30,00	30,20	7,00	A	13X30X7	S	32
13,00	31,80	32,00	7,00	A	* 13X32X7	S	32
13,00	34,80	35,00	7,00	A	* 13X35X7	S	32
13,80	23,80	24,00	5,00	A	* 13.8X24X5	S	32
14,00	20,80	21,00	4,00	A	* 14X21X4	S	32
14,00	21,80	22,00	4,00	A	* 14X22X4	S	32
14,00	21,80	22,00	6,00	A	* 14X22X6	S	32
14,00	21,80	22,00	7,00	A	* 14X22X7	S	32
14,00	22,80	23,00	6,00	A	* 14X23X6	S	32
14,00	23,80	24,00	4,00	A	* 14X24X4	S	32
14,00	23,80	24,00	5,00	A	* 14X24X5	S	32
14,00	23,80	24,00	6,00	A	* 14X24X6	S	32
14,00	23,80	24,00	8,00	A	* 14X24X8	S	32
14,00	24,00	24,23	7,00	A	221410	S	35
14,00	24,00	24,23	7,00	A	14X24X7	S	35
14,00	24,00	24,25	12,70	A	2004 ⬅	S	#
14,00	24,80	25,00	4,00	A	* 14X25X4	S	32
14,00	24,80	25,00	7,00	A	* 14X25X7	S	32
14,00	24,80	25,00	9,00	A	* 14X25X9	S	32
14,00	25,00	25,20	7,00	A	710116	N	32
14,00	25,00	25,23	5,00	A	14X25X5	S	32
14,00	25,80	26,00	8,00	A	* 14X26X8	S	32
14,00	26,00	26,23	7,00	A	14X26X7	S	32
14,00	26,80	27,00	10,00	A	* 14X27X10	S	32
14,00	27,00	27,20	7,00	A	14X27X7	S	32
14,00	27,80	28,00	7,00	A	* 14X28X7	S	32
14,00	27,80	28,00	7,00	A	* 14X28X7	S	32
14,00	28,00	28,23	6,00	A	14X28X6	S	35
14,00	28,30	28,50	7,00	A	* 14X28.5X7	S	32
14,00	28,80	29,00	7,00	A	* 14X29X7	S	32
14,00	29,80	30,00	7,50	A	* 14X30X7.5	S	32
14,00	29,80	30,00	8,00	A	* 14X30X8	S	32
14,00	29,80	30,00	9,00	A	* 14X30X9	S	32
14,00	29,80	30,00	10,00	A	* 14X30X10	S	32
14,00	30,00	30,20	7,00	A	14X30X7	S	32
14,00	30,00	30,20	7,00	A	* 14X30X7V	V	35

For Illustration and Material Data See Technical Section

Designed For A Specific Application - Not Recommended For General Use ⬅ Hydrodynamic Lip Design-CCW

* The U.S. customer service number is 877-4-TIMKEN. The Canadian customer service numbers are 800-565-4927 (English) and 800-565-0438 (French-Canadian).

Shaft Size	Hsg. Bore	Seal O.D.	Seal Width	Grp.	Part No.	Lip Mat'l	Illus./ Type
14,00	31,80	32,00	7,50	A	* 14X32X7.5	S	32
14,00	31,80	32,00	10,00	A	* 14X32X10	S	32
14,00	32,00	32,20	7,00	A	14X32X7	S	32
14,00	34,80	35,00	8,00	A	* 14X35X8	S	32
14,00	34,80	35,00	10,00	A	* 14X35X10	S	32
14,00	35,00	35,22	7,00	A	14X35X7	S	35
14,00	35,80	36,00	7,00	A	* 14X36X7	S	32
14,00	39,80	40,00	7,00	A	* 14X40X7	S	32
14,00	39,80	40,00	10,00	A	* 14X40X10	S	32
14,50	31,80	32,00	7,00	A	* 14.5X32X7	S	32
14,80	29,80	30,00	7,50	A	* 14.8X30X7.5	S	32
15,00	20,00	20,10	5,00	A	710346	S	49
15,00	20,80	21,00	5,00	A	* 15X21X5	S	32
15,00	21,80	22,00	4,00	A	* 15X22X4	S	32
15,00	21,80	22,00	5,00	A	* 15X22X5	S	32
15,00	21,80	22,00	7,00	A	* 15X22X7	S	32
15,00	22,80	23,00	7,00	A	* 15X23X7	S	32
15,00	23,80	24,00	5,00	A	* 15X24X5	S	32
15,00	23,80	24,00	6,00	A	* 15X24X6	S	32
15,00	24,00	24,20	5,00	A	2027	S	35
15,00	24,00	24,23	7,00	A	15X24X7	S	35
15,00	25,00	25,20	5,00	A	**15X25X5**	S	32
15,00	25,00	25,20	7,00	A	15X25X7	S	35
15,00	25,00	25,22	7,00	A	* 350509	S	35
15,00	25,00	25,25	6,00	A	15X25X6	N	32
15,00	25,00	25,25	6,00	A	221510	N	32
15,00	25,30	25,50	4,50	A	* 15X25.5X4.5	S	32
15,00	25,30	25,50	7,00	A	* 15X25.5X7	S	32
15,00	25,80	26,00	6,00	A	* 15X26X6	S	32
15,00	25,80	26,00	8,00	A	* 15X26X8	S	32
15,00	25,80	26,00	9,00	A	* 15X26X9	S	32
15,00	26,00	26,23	7,00	A	15X26X7	S	35
15,00	26,80	27,00	7,00	A	* 15X27X7	S	32
15,00	26,80	27,00	8,00	A	* 15X27X8	S	32
15,00	27,80	28,00	6,00	A	* 15X28X6	S	32
15,00	27,80	28,00	8,00	A	* 15X28X8	S	32
15,00	27,80	28,00	10,00	A	* 15X28X10	S	32
15,00	27,93	28,13	7,00	A	* 15X28.13X7	S	32
15,00	28,00	28,20	7,00	A	15X28X7	S	32
15,00	28,30	28,50	7,00	A	* 15X28.5X7	S	32
15,00	28,80	29,00	7,00	A	* 15X29X7	S	32
15,00	29,80	30,00	5,00	A	* 15X30X5	S	32
15,00	29,80	30,00	7,50	A	* 15X30X7.5	S	32
15,00	29,80	30,00	8,00	A	* 15X30X8	S	32
15,00	29,80	30,00	10,00	A	* 15X30X10	S	32
15,00	30,00	30,23	7,00	A	221540	S	35
15,00	30,00	30,23	7,00	A	15X30X7	S	35
15,00	30,80	31,00	7,00	A	* 15X31X7	S	32
15,00	31,80	32,00	5,00	A	* 15X32X5	S	32
15,00	31,80	32,00	7,50	A	* 15X32X7.5	S	32
15,00	31,80	32,00	9,00	A	* 15X32X9	S	32
15,00	32,00	32,20	7,00	A	15X32X7	S	35
15,00	32,00	32,20	7,00	A	* 15X32X7V	V	35
15,00	32,00	32,22	8,00	A	15X32X8	S	35
15,00	34,80	35,00	5,00	A	* 15X35X5	S	32
15,00	34,80	35,00	6,00	A	* 15X35X6	S	32
15,00	34,80	35,00	8,00	A	* 15X35X8	S	32
15,00	34,80	35,00	10,00	A	* 15X35X10	S	32
15,00	35,00	35,20	7,00	A	* 15X35X7V	V	35
15,00	35,00	35,23	7,00	A	15X35X7	S	35
15,00	35,80	36,00	7,00	A	* 15X36X7	S	32
15,00	36,80	37,00	7,00	A	* 15X37X7	S	32
15,00	37,00	37,20	6,00	A	15X37X6	S	32
15,00	37,80	38,00	10,00	A	* 15X38X10	S	32
15,00	38,00	38,20	7,00	A	* 15X38X7	S	32
15,00	39,80	40,00	8,00	A	* 15X40X8	S	32
15,00	39,80	40,00	10,00	A	* 15X40X10	S	32
15,00	40,00	40,20	7,00	A	15X40X7	S	32
15,00	41,80	42,00	7,00	A	* 15X42X7	S	32
15,00	41,80	42,00	8,00	A	* 15X42X8	S	32
15,00	41,80	42,00	10,00	A	* 15X42X10	S	32
15,60	25,30	25,50	7,00	A	* 15.6X25.5X7	S	32
16,00	20,80	21,00	6,00	A	* 16X21X6	S	32
16,00	21,80	22,00	7,00	A	* 16X22X7	S	32
16,00	22,00	22,20	4,00	A	16X22X4	S	32
16,00	23,80	24,00	4,00	A	* 16X24X4	S	32
16,00	24,00	24,20	6,00	A	16X24X6	S	32
16,00	24,00	24,20	7,00	A	16X24X7	S	32
16,00	24,80	25,00	5,00	A	* 16X25X5	S	32
16,00	24,80	25,00	6,00	A	* 16X25X6	S	32
16,00	24,80	25,00	7,00	A	* 16X25X7	S	32
16,00	25,00	25,20	5,00	A	16X24X5	S	35
16,00	25,80	26,00	5,00	A	* 16X26X5	S	32
16,00	25,80	26,00	6,00	A	* 16X26X6	S	32
16,00	25,80	26,00	6,00	A	* 16X26X6	S	32
16,00	26,00	26,10	7,00	A	710243	S	25
16,00	26,00	26,20	7,00	A	16X26X7	S	32
16,00	26,80	27,00	7,00	A	* 16X27X7	S	32
16,00	27,00	27,20	14,00	A	221607	N	#
16,00	27,23	27,33	9,00	A	* 4662V	V	47
16,00	27,23	27,33	9,00	A	714662	V	47
16,00	28,00	28,20	7,00	A	* 16X28X7V	V	32
16,00	28,00	28,23	7,00	A	221610	N	32
16,00	28,00	28,23	7,00	A	16X28X7	S	35
16,00	28,30	28,50	8,00	A	* 16X28.5X8	S	32
16,00	28,80	29,00	7,00	A	* 16X29X7	S	32
16,00	29,80	30,00	4,50	A	* 16X30X4.5	S	32
16,00	29,80	30,00	5,00	A	* 16X30X5	S	32
16,00	29,80	30,00	6,00	A	* 16X30X6	S	32
16,00	29,80	30,00	8,00	A	* 16X30X8	S	32
16,00	29,80	30,00	10,00	A	* 16X30X10	S	32
16,00	30,00	30,20	7,00	A	* 16X30X7V	V	35
16,00	30,00	30,20	7,00	A	* 713026	V	25
16,00	30,00	30,23	7,00	A	221620	S	35
16,00	30,00	30,23	7,00	A	16X30X7	S	35
16,00	31,80	32,00	10,00	A	* 16X32X10	S	32
16,00	32,00	32,28	7,00	A	16X32X7	S	32
16,00	33,80	34,00	4,00	A	* 16X34X4	S	32
16,00	34,80	35,00	8,00	A	* 16X35X8	S	32
16,00	34,80	35,00	10,00	A	* 16X35X10	S	32
16,00	35,00	35,23	7,00	A	16X35X7	S	35
16,00	36,00	36,20	7,00	A	* 16X36X7	S	32
16,00	36,80	37,00	7,00	A	* 16X37X7	S	32
16,00	37,80	38,00	8,00	A	* 16X38X8	S	32
16,00	38,00	38,20	7,00	A	16X38X7	S	32
16,00	39,80	40,00	10,00	A	* 16X40X10	S	32
16,00	40,00	40,20	7,00	A	16X40X7	S	32

For Illustration and Material Data See Technical Section

Designed For A Specific Application - Not Recommended For General Use

* The U.S. customer service number is 877-4-TIMKEN. The Canadian customer service numbers are 800-565-4927 (English) and 800-565-0438 (French-Canadian).

Shaft Size	Hsg. Bore	Seal O.D.	Seal Width	Grp.	Part No.	Lip Mat'l	Illus./ Type
16,00	44,75	44,96	9,00	A	* 4616V	V	#
16,00	44,75	44,96	9,00	A	714616	V	#
16,00	56,00	56,20	6,50	A	710261➡	V	32
16,40	29,80	30,00	5,00	A	* 16.4X30X5	S	32
17,00	20,80	20,90	3,10	A	710361	S	44
17,00	23,80	24,00	7,00	A	* 17X24X7	S	32
17,00	24,80	25,00	4,00	A	* 17X25X4	S	32
17,00	24,80	25,00	6,00	A	* 17X25X6	S	32
17,00	24,80	25,00	7,00	A	* 17X25X7	S	32
17,00	25,00	25,10	5,00	A	710362	S	49
17,00	25,80	26,00	6,00	A	* 17X26X6	S	32
17,00	25,80	26,00	7,00	A	* 17X26X7	S	32
17,00	26,80	27,00	5,00	A	* 17X27X5	S	32
17,00	26,80	27,00	8,00	A	* 17X27X8	S	32
17,00	26,80	27,00	10,00	A	* 17X27X10	S	32
17,00	27,00	27,20	7,00	A	17X27X7	S	32
17,00	27,80	28,00	4,50	A	* 17X28X4.5	S	32
17,00	27,80	28,00	5,00	A	* 17X28X5	S	32
17,00	27,80	28,00	6,00	A	* 17X28X6	S	32
17,00	27,80	28,00	8,00	A	* 17X28X8	S	32
17,00	28,00	28,20	5,00	A	* 713001	V	32
17,00	28,00	28,20	7,00	A	* 17X28X7V	V	35
17,00	28,00	28,20	7,00	A	* 713080	S	47
17,00	28,00	28,23	7,00	A	221710	S	35
17,00	28,00	28,23	7,00	A	17X28X7	S	35
17,00	28,30	28,50	7,00	A	* 17X28.5X7	S	32
17,00	28,80	29,00	5,00	A	* 17X29X5	S	32
17,00	29,00	29,20	7,00	A	* 17X29X7	S	32
17,00	29,80	30,00	5,00	A	* 17X30X5	S	32
17,00	29,80	30,00	6,00	A	* 17X30X6	S	32
17,00	29,80	30,00	6,00	A	* 17X30X6	S	32
17,00	29,80	30,00	8,00	A	* 17X30X8	S	32
17,00	29,80	30,00	10,00	A	* 17X30X10	S	32
17,00	30,00	30,20	7,00	A	* 17X30X7V	V	35
17,00	30,00	30,23	8,00	A	221720	S	47
17,00	30,00	30,23	7,00	A	17X30X7	S	35
17,00	30,80	31,00	7,00	A	* 17X31X7	S	32
17,00	30,80	31,00	8,00	A	* 17X31X8	S	32
17,00	31,55	31,75	8,00	A	* 17X31.75X8	S	32
17,00	31,80	32,00	5,00	A	* 17X32X5	S	32
17,00	31,80	32,00	6,00	A	* 17X32X6	S	32
17,00	31,80	32,00	8,00	A	* 17X32X8	S	32
17,00	32,00	32,22	7,00	A	221730	S	35
17,00	32,00	32,22	7,00	A	17X32X7	S	35
17,00	32,80	33,00	7,00	A	* 17X33X7	S	32
17,00	33,80	34,00	4,00	A	* 17X34X4	S	32
17,00	33,80	34,00	7,00	A	* 17X34X7	S	32
17,00	34,00	34,10	7,90	A	710251	N	47
17,00	34,30	34,50	4,00	A	* 17X34.5X4	S	32
17,00	34,80	35,00	6,00	A	* 17X35X6	S	32
17,00	34,80	35,00	10,00	A	* 17X35X10	S	32
17,00	35,00	35,18	7,00	A	17X35X7	S	35
17,00	35,00	35,18	7,00	A	221735	S	35
17,00	35,00	35,20	7,00	A	* 17X35X7V	V	35
17,00	35,00	35,20	8,00	A	17X35X8	S	35
17,00	36,00	36,20	7,00	A	* 17X36X7	S	32
17,00	36,80	37,00	10,00	A	* 17X37X10	S	32
17,00	37,00	37,20	7,00	A	17X37X7	S	32
17,00	37,80	38,00	10,00	A	* 17X38X10	S	32
17,00	38,00	38,20	7,00	A	17X38X7	S	32
17,00	39,80	40,00	5,00	A	* 17X40X5	S	32
17,00	39,80	40,00	8,00	A	* 17X40X8	S	32
17,00	39,80	40,00	10,00	A	* 17X40X10	S	32
17,00	40,00	40,23	7,00	A	17X40X7	S	35
17,00	42,00	42,20	7,00	A	* 17X42X7	S	32
17,00	45,00	45,20	7,00	A	* 17X45X7	S	32
17,00	45,80	46,00	6,00	A	* 17X46X6	S	32
17,00	46,00	46,20	7,00	A	* 17X46X7	S	32
17,00	46,80	47,00	10,00	A	* 17X47X10	S	32
17,00	47,00	47,20	7,00	A	17X47X7	S	35
17,00	47,00	47,20	8,00	A	17X47X8	S	32
17,40	30,00	30,20	7,00	A	710344	S	32
17,50	27,50	27,70	7,00	A	710299	N	#
17,50	31,80	32,00	6,00	A	* 17.5X32X6	S	32
17,60	29,80	30,00	7,00	A	* 17.6X30X7	S	32
18,00	23,00	23,20	4,00	A	710297	S	34
18,00	24,80	25,00	7,00	A	* 18X25X7	S	32
18,00	25,80	26,00	7,00	A	* 18X26X7	S	32
18,00	26,00	26,10	4,00	A	710222	S	98
18,00	26,80	27,00	7,00	A	* 18X27X7	S	32
18,00	27,80	28,00	7,00	A	* 18X28X7	S	32
18,00	27,80	28,00	8,00	A	* 18X28X8	S	32
18,00	27,80	28,00	10,00	A	* 18X28X10	S	32
18,00	28,00	28,20	6,00	A	1015	S	35
18,00	28,00	28,20	6,00	A	1015N	S	35
18,00	28,00	28,20	6,00	A	* 4400	N	34
18,00	28,00	28,20	7,00	A	* 18X28X7V	V	35
18,00	28,00	28,28	6,00	A	18X28X6	S	35
18,00	28,80	29,00	7,00	A	* 18X29X7	S	32
18,00	29,80	30,00	6,00	A	* 18X30X6	S	32
18,00	29,80	30,00	6,00	A	* 18X30X6	S	32
18,00	29,80	30,00	8,00	A	* 18X30X8	S	32
18,00	29,80	30,00	10,00	A	* 18X30X10	S	32
18,00	30,00	30,10	6,70	A	3816&	S	271
18,00	30,00	30,23	7,00	A	18X30X7	S	35
18,00	30,00	30,23	9,00	A	221820➡	S	32
18,00	30,80	31,00	7,00	A	* 18X31X7	S	32
18,00	31,80	32,00	6,00	A	* 18X32X6	S	32
18,00	31,80	32,00	10,00	A	* 18X32X10	S	32
18,00	32,00	32,10	7,00	A	710156	S	#
18,00	32,00	32,20	7,00	A	18X32X7	S	35
18,00	32,00	32,20	7,00	A	* 18X32X7V	V	35
18,00	32,00	32,22	8,00	A	221830	S	35
18,00	32,00	32,22	8,00	A	18X32X8	S	35
18,00	32,00	32,23	12,70	A	* 4401	N	#
18,00	33,80	34,00	7,00	A	* 18X34X7	S	32
18,00	34,00	34,20	8,00	A	710412	S	32
18,00	34,80	35,00	8,00	A	* 18X35X8	S	32
18,00	34,80	35,00	10,00	A	* 18X35X10	S	32
18,00	35,00	35,18	7,00	A	18X35X7	S	32
18,00	35,00	35,20	8,00	A	* 18X35X8V	V	35
18,00	36,00	36,20	7,00	A	* 18X36X7	S	32
18,00	36,80	37,00	7,00	A	* 18X37X7	S	32
18,00	37,00	37,20	8,00	A	18X37X8	S	32
18,00	37,80	38,00	10,00	A	* 18X38X10	S	32

For Illustration and Material Data See Technical Section

Designed For A Specific Application - Not Recommended For General Use ➡ Hydrodynamic Lip Design-CW & Flanged O.D.

* The U.S. customer service number is 877-4-TIMKEN. The Canadian customer service numbers are 800-565-4927 (English) and 800-565-0438 (French-Canadian).

Shaft Size	Hsg. Bore	Seal O.D.	Seal Width	Grp.	Part No.	Lip Mat'l	Illus./ Type
18,00	38,00	38,20	7,00	A	18X38X7	S	32
18,00	39,80	40,00	10,00	A	* 18X40X10	S	32
18,00	40,00	40,22	7,00	A	18X40X7	S	35
18,00	40,00	40,20	7,00	A	* 18X40X7V	V	35
18,00	41,80	42,00	7,00	A	* 18X42X7	S	32
18,00	41,80	42,00	10,00	A	* 18X42X10	S	32
18,70	35,00	35,20	7,00	A	710272	N	32
19,00	24,80	25,00	6,00	A	* 19X25X6	S	32
19,00	26,80	27,00	5,00	A	* 19X27X5	S	32
19,00	26,80	27,00	10,00	A	* 19X27X10	S	32
19,00	27,00	27,20	6,00	A	19X27X6	S	35
19,00	27,80	28,00	7,00	A	* 19X28X7	S	32
19,00	28,80	29,00	7,00	A	* 19X29X7	S	32
19,00	30,00	30,20	7,00	A	**19X30X7**	S	32
19,00	30,00	30,20	7,00	A	221920	S	32
19,00	31,80	32,00	5,00	A	* 19X32X5	S	32
19,00	31,80	32,00	6,00	A	* 19X32X6	S	32
19,00	31,80	32,00	10,00	A	* 19X32X10	S	32
19,00	32,00	32,20	7,00	A	19X32X7	S	35
19,00	32,00	32,20	8,00	A	19X32X8	S	32
19,00	32,00	32,20	8,00	A	221922	S	32
19,00	32,80	33,00	8,00	A	* 19X33X8	S	32
19,00	33,30	33,50	7,00	A	* 19X33.5X7	S	32
19,00	33,80	34,00	7,00	A	* 19X34X7	S	32
19,00	34,80	35,00	7,00	A	* 19X35X7	S	32
19,00	34,80	35,00	8,00	A	* 19X35X8	S	32
19,00	34,93	35,00	8,00	A	710445	S	35
19,00	35,00	35,23	10,00	A	19X35X10	S	35
19,00	35,00	35,23	10,00	A	710273	S	35
19,00	35,80	36,00	7,00	A	* 19X36X7	S	32
19,00	36,00	36,23	6,50	A	221925	S	35
19,00	36,80	37,00	10,00	A	* 19X37X10	S	32
19,00	37,00	37,20	7,00	A	* 19X37X7	S	32
19,00	37,80	38,00	8,00	A	* 19X38X8	S	32
19,00	37,80	38,00	10,00	A	* 19X38X10	S	32
19,00	38,00	38,20	7,00	A	* 19X38X7	S	32
19,00	38,00	38,20	7,00	A	710154	S	32
19,00	39,80	40,00	7,00	A	* 19X40X7	S	32
19,00	40,00	40,23	10,00	A	19X40X10	S	35
19,00	40,80	41,00	7,00	A	* 19X41X7	S	32
19,00	42,00	42,20	7,00	A	* 19X42X7	S	32
19,00	45,00	45,20	7,00	A	* 19X45X7	S	32
19,00	46,00	46,20	7,00	A	* 19X46X7	S	32
19,00	47,00	47,20	7,00	A	19X47X7	S	32
19,00	47,63	47,73	6,35	A	* 43361	S	4S
19,50	34,80	35,00	6,00	A	* 19.5X35X6	S	32
19,80	29,80	30,00	5,00	A	* 19.8X30X5	S	32
20,00	24,80	25,00	7,00	A	* 20X25X7	S	32
20,00	25,80	26,00	4,00	A	* 20X26X4	S	32
20,00	25,80	26,00	5,00	A	* 20X26X5	S	32
20,00	25,80	26,00	5,60	A	* 20X26X5.6	S	32
20,00	26,00	26,20	4,00	A	710249	S	97
20,00	26,80	27,00	5,00	A	* 20X27X5	S	32
20,00	27,80	28,00	4,00	A	* 20X28X4	S	32
20,00	27,80	28,00	7,00	A	* 20X28X7	S	32
20,00	28,00	28,20	6,00	A	20X28X6	S	32
20,00	29,80	30,00	4,50	A	* 20X30X4.5	S	32
20,00	29,80	30,00	5,50	A	* 20X30X5.5	S	32
20,00	29,80	30,00	6,00	A	* 20X30X6	S	32
20,00	29,80	30,00	9,00	A	* 20X30X9	S	32
20,00	29,80	30,00	10,00	A	* 20X30X10	S	32
20,00	30,00	30,20	5,00	A	20X30X5	S	35
20,00	30,00	30,20	5,00	A	* 20X30X5V	V	35
20,00	30,00	30,20	7,00	A	* 20X30X7V	V	35
20,00	30,00	30,28	7,00	A	222025	S	35
20,00	30,00	30,28	7,00	A	20X30X7	S	35
20,00	30,80	31,00	5,00	A	* 20X31X5	S	32
20,00	31,00	31,20	7,00	A	* 20X31X7	S	32
20,00	31,80	32,00	5,00	A	* 20X32X5	S	32
20,00	31,80	32,00	6,00	A	* 20X32X6	S	32
20,00	31,80	32,00	7,50	A	* 20X32X7.5	S	32
20,00	31,80	32,00	8,00	A	* 20X32X8	S	32
20,00	31,80	32,00	10,00	A	* 20X32X10	S	32
20,00	32,00	32,23	7,00	A	222020	S	35
20,00	32,00	32,23	7,00	A	20X32X7	S	35
20,00	32,80	33,00	7,00	A	* 20X33X7	S	32
20,00	32,80	33,00	10,00	A	* 20X33X10	S	32
20,00	33,80	34,00	7,00	A	* 20X34X7	S	32
20,00	34,00	34,25	7,00	A	222028⬅	S	32
20,00	34,80	35,00	6,00	A	* 20X35X6	S	32
20,00	34,80	35,00	8,00	A	* 20X35X8	S	32
20,00	34,80	35,00	10,00	A	* 20X35X10	S	32
20,00	35,00	35,20	7,00	A	* 710280	V	32
20,00	35,00	35,23	5,50	A	222030➡	S	32
20,00	35,00	35,23	7,00	A	20X35X7	S	35
20,00	35,80	36,00	8,00	A	* 20X36X8	S	32
20,00	35,80	36,00	10,00	A	* 20X36X10	S	32
20,00	35,80	36,00	12,00	A	* 20X36X12	S	32
20,00	36,00	36,20	7,00	A	20X36X7	S	32
20,00	36,00	36,20	7,00	A	222036	V	32
20,00	36,80	37,00	6,00	A	* 20X37X6	S	32
20,00	36,80	37,00	10,00	A	* 20X37X10	S	32
20,00	37,00	37,20	7,00	A	20X37X7	S	32
20,00	37,00	37,20	8,00	A	20X37X8	S	32
20,00	37,50	37,70	7,00	A	* 20X37.7X7	S	32
20,00	37,80	38,00	5,00	A	* 20X38X5	S	32
20,00	37,80	38,00	8,00	A	* 20X38X8	S	32
20,00	37,80	38,00	10,00	A	* 20X38X10	S	32
20,00	38,00	38,20	7,00	A	20X38X7	S	32
20,00	38,80	39,00	6,00	A	* 20X39X6	S	32
20,00	39,60	39,80	6,50	A	* 20X39.8X6.5	S	32
20,00	39,80	40,00	8,00	A	* 20X40X8	S	32
20,00	39,80	40,00	9,00	A	* 20X40X9	S	32
20,00	39,80	40,00	12,00	A	* 20X40X12	S	32
20,00	40,00	40,20	7,00	A	* 20X40X7V	V	32
20,00	40,00	40,23	7,00	A	222050	S	35
20,00	40,00	40,23	7,00	A	20X40X7	S	35
20,00	40,00	40,23	10,00	A	20X40X10	S	35
20,00	40,00	40,30	5,70	A	* 713029	N	#
20,00	40,00	40,30	7,50	A	* 713019	N	45
20,00	41,05	41,25	7,00	A	* 20X41.25X7	S	32
20,00	41,80	42,00	6,00	A	* 20X42X6	S	32
20,00	41,80	42,00	8,00	A	* 20X42X8	S	32
20,00	42,00	42,15	10,00	A	20X42X10	S	32
20,00	42,00	42,25	7,00	A	20X42X7	S	35
20,00	42,00	42,25	7,00	A	* 20X42X7V	V	35

For Illustration and Material Data See Technical Section

Designed For A Specific Application - Not Recommended For General Use ➡ Hydrodynamic Lip Design-CW ⬅ Hydrodynamic Lip Design-CCW

* The U.S. customer service number is 877-4-TIMKEN. The Canadian customer service numbers are 800-565-4927 (English) and 800-565-0438 (French-Canadian).

Shaft Size	Hsg. Bore	Seal O.D.	Seal Width	Grp.	Part No.	Lip Mat'l	Illus./ Type
20,00	43,80	44,00	7,00	A	* 20X44X7	S	32
20,00	44,80	45,00	7,00	A	* 20X45X7	S	32
20,00	44,80	45,00	8,00	A	* 20X45X8	S	32
20,00	44,80	45,00	10,00	A	* 20X45X10	S	32
20,00	44,80	45,00	12,00	A	* 20X45X12	S	32
20,00	45,80	46,00	8,00	A	* 20X46X8	S	32
20,00	46,00	46,20	7,00	A	* 20X46X7	S	32
20,00	46,80	47,00	6,00	A	* 20X47X6	S	32
20,00	46,80	47,00	8,00	A	* 20X47X8	S	32
20,00	46,80	47,00	9,00	A	* 20X47X9	S	32
20,00	46,80	47,00	10,00	A	* 20X47X10	S	32
20,00	46,80	47,00	12,00	A	* 20X47X12	S	32
20,00	46,80	47,00	13,00	A	* 20X47X13	S	32
20,00	47,00	47,20	7,00	A	* 20X47X7V	V	35
20,00	47,00	47,20	7,00	A	222060	S	35
20,00	47,00	47,20	8,50	A	710342➡	S	32
20,00	47,00	47,22	7,00	A	20X47X7	S	35
20,00	47,80	48,00	8,00	A	* 20X48X8	S	32
20,00	47,80	48,00	10,00	A	* 20X48X10	S	32
20,00	48,00	48,20	7,00	A	* 20X48X7	S	32
20,00	48,80	49,00	7,00	A	* 20X49X7	S	32
20,00	49,80	50,00	8,00	A	* 20X50X8	S	32
20,00	49,80	50,00	10,00	A	* 20X50X10	S	32
20,00	50,00	50,20	7,00	A	* 20X50X7	S	32
20,00	51,75	52,00	8,00	A	* 20X52X8	S	32
20,00	51,75	52,00	9,00	A	* 20X52X9	S	32
20,00	51,75	52,00	10,00	A	* 20X52X10	S	32
20,00	51,75	52,00	12,00	A	* 20X52X12	S	32
20,00	52,00	52,20	7,00	A	20X52X7	S	35
21,00	30,80	31,00	7,00	A	* 21X31X7	S	32
21,00	31,80	32,00	5,00	A	* 21X32X5	S	32
21,00	32,80	33,00	7,00	A	* 21X33X7	S	32
21,00	35,00	35,20	7,00	A	21X35X7	S	32
21,00	35,00	35,20	8,00	A	21X35X8	S	32
21,00	36,00	36,20	8,00	A	* 21X36X8	S	32
21,00	36,80	37,00	5,50	A	* 21X37X5.5	S	32
21,00	36,80	37,00	7,00	A	* 21X37X7	S	32
21,00	37,00	37,20	8,00	A	* 21X37X8	S	32
21,00	38,00	38,20	8,00	A	* 21X38X8	S	32
21,00	39,80	40,00	7,00	A	* 21X40X7	S	32
21,00	40,00	40,20	8,00	A	* 21X40X8	S	32
21,00	52,00	52,20	8,00	A	* 21X52X8	S	32
21,50	34,80	35,00	8,00	A	* 21.5X35X8	S	32
21,70	34,80	35,00	6,50	A	* 21.7X35X6.5	S	32
22,00	28,00	28,20	8,00	A	* 22X28X8	S	32
22,00	29,80	30,00	7,00	A	* 22X30X7	S	32
22,00	29,80	30,00	8,00	A	* 22X30X8	S	32
22,00	30,80	31,00	7,00	A	* 22X31X7	S	32
22,00	31,00	31,20	6,00	A	22X31X6	S	32
22,00	31,00	31,20	8,00	A	* 22X31X8	S	32
22,00	31,80	32,00	5,00	A	* 22X32X5	S	32
22,00	31,80	32,00	6,00	A	* 22X32X6	S	32
22,00	32,00	32,20	7,00	A	* 22X32X7V	V	35
22,00	32,00	32,23	7,00	A	222210	S	35
22,00	32,00	32,23	7,00	A	22X32X7	S	35
22,00	32,80	33,00	7,00	A	* 22X33X7	S	32
22,00	32,80	33,00	10,00	A	* 22X33X10	S	32
22,00	33,80	34,00	7,00	A	* 22X34X7	S	32
22,00	34,80	35,00	5,00	A	* 22X35X5	S	32
22,00	34,80	35,00	8,00	A	* 22X35X8	S	32
22,00	34,80	35,00	9,00	A	* 22X35X9	S	32
22,00	34,80	35,00	10,00	A	* 22X35X10	S	32
22,00	35,00	35,20	7,00	A	* 22X35X7V	V	35
22,00	35,00	35,20	7,00	A	* 713031	V	35
22,00	35,00	35,23	7,00	A	222220	S	32
22,00	35,00	35,23	7,00	A	22X35X7	S	35
22,00	35,80	36,00	8,00	A	* 22X36X8	S	32
22,00	35,80	36,00	10,00	A	* 22X36X10	S	32
22,00	36,00	36,20	7,00	A	22X36X7	S	32
22,00	36,80	37,00	6,00	A	* 22X37X6	S	32
22,00	37,00	37,23	7,00	A	22X37X7	S	35
22,00	38,00	38,20	7,00	A	22X38X7	S	35
22,00	38,00	38,20	7,00	A	* 22X38X7V	V	35
22,00	38,00	38,20	8,00	A	22X38X8	S	32
22,00	38,00	38,20	8,00	A	222238	S	32
22,00	38,80	39,00	7,00	A	* 22X39X7	S	32
22,00	39,80	40,00	4,00	A	* 22X40X4	S	32
22,00	39,80	40,00	10,00	A	* 22X40X10	S	32
22,00	39,80	40,00	11,00	A	* 22X40X11	S	32
22,00	39,80	40,00	12,00	A	* 22X40X12	S	32
22,00	40,00	40,18	16,00	A	* 1163	S	#
22,00	40,00	40,20	7,00	A	* 22X40X7V	V	32
22,00	40,00	40,20	7,50	A	* 713032	N	45
22,00	40,00	40,20	8,00	A	22X40X8	S	35
22,00	40,00	40,23	7,00	A	22X40X7	S	35
22,00	40,00	40,23	7,00	A	222240	S	35
22,00	40,00	40,23	12,00	A	222242	N	32
22,00	40,00	40,34	7,75	A	1963➡	N	35
22,00	41,05	41,25	6,00	A	* 22X41.25X6	S	32
22,00	41,30	41,50	6,00	A	* 22X41.5X6	S	32
22,00	41,80	42,00	6,00	A	* 22X42X6	S	32
22,00	41,80	42,00	11,00	A	* 22X42X11	S	32
22,00	42,00	42,20	7,00	A	22X42X7	S	32
22,00	42,00	42,20	10,00	A	22X42X10	S	35
22,00	43,80	44,00	7,00	A	* 22X44X7	S	32
22,00	44,80	45,00	5,00	A	* 22X45X5	S	32
22,00	44,80	45,00	8,00	A	* 22X45X8	S	32
22,00	44,80	45,00	10,00	A	* 22X45X10	S	32
22,00	45,00	45,20	8,00	A	222267⬅	H	32
22,00	45,00	45,23	7,00	A	22X45X7	S	35
22,00	46,00	46,20	8,00	A	* 22X46X8	S	32
22,00	46,80	47,00	10,00	A	* 22X47X10	S	32
22,00	47,00	47,23	7,00	A	222270	S	35
22,00	47,00	47,23	7,00	A	22X47X7	S	35
22,00	47,80	48,00	7,00	A	* 22X48X7	S	32
22,00	47,80	48,00	11,00	A	* 22X48X11	S	32
22,00	48,00	48,20	8,00	A	* 22X48X8	S	32
22,00	49,80	50,00	5,00	A	* 22X50X5	S	32
22,00	49,80	50,00	10,00	A	* 22X50X10	S	32
22,00	50,00	50,20	8,00	A	* 22X50X8	S	32
22,00	51,75	52,00	10,00	A	* 22X52X10	S	32
22,00	52,00	52,20	8,00	A	* 22X52X8	S	32
22,00	55,75	56,00	7,00	A	* 22X56X7	S	32
23,00	31,80	32,00	5,50	A	710254	S	34
23,00	32,00	32,20	5,00	A	222310	S	34
23,00	34,00	34,23	6,50	A	710155	S	35
23,00	34,00	34,23	8,00	A	222330⬅	N	32
23,00	35,00	35,20	7,00	A	* 713033	V	#
23,00	35,00	35,20	8,50	A	* 713020	N	25

For Illustration and Material Data See Technical Section

Designed For A Specific Application - Not Recommended For General Use ➡ Hydrodynamic Lip Design-CW ⬅ Hydrodynamic Lip Design-CCW

* The U.S. customer service number is 877-4-TIMKEN. The Canadian customer service numbers are 800-565-4927 (English) and 800-565-0438 (French-Canadian).

Metric List Sizes & Type

Shaft Size	Hsg. Bore	Seal O.D.	Seal Width	Grp.	Part No.	Lip Mat'l	Illus./ Type
23,00	40,00	40,23	7,00	A	222340➡	N	32
23,00	31,80	32,00	7,00	A	*23X32X7	S	32
23,00	34,80	35,00	7,00	A	*23X35X7	S	32
23,00	35,80	36,00	6,00	A	*23X36X6	S	32
23,00	35,80	36,00	7,00	A	*23X36X7	S	32
23,00	35,80	36,00	10,00	A	*23X36X10	S	32
23,00	35,80	36,00	13,00	A	*23X36X13	S	32
23,00	36,80	37,00	7,00	A	*23X37X7	S	32
23,00	37,80	38,00	7,00	A	*23X38X7	S	32
23,00	39,80	40,00	6,00	A	*23X40X6	S	32
23,00	39,80	40,00	10,00	A	*23X40X10	S	32
23,00	40,00	40,10	7,50	A	*713030	N	45
23,00	41,80	42,00	7,00	A	*23X42X7	S	32
23,00	42,80	43,00	8,00	A	*23X43X8	S	32
23,00	46,80	47,00	7,00	A	*23X47X7	S	32
23,00	46,80	47,00	8,00	A	*23X47X8	S	32
23,00	46,80	47,00	10,00	A	*23X47X10	S	32
24,00	31,80	32,00	4,00	A	*24X32X4	S	32
24,00	31,80	32,00	7,00	A	*24X32X7	S	32
24,00	32,80	33,00	7,00	A	*24X33X7	S	32
24,00	33,80	34,00	7,00	A	*24X34X7	S	32
24,00	34,80	35,00	6,00	A	*24X35X6	S	32
24,00	34,80	35,00	8,00	A	*24X35X8	S	32
24,00	35,00	35,23	7,00	A	222410	S	35
24,00	35,00	35,23	7,00	A	24X35X7	S	35
24,00	35,80	36,00	7,00	A	*24X36X7	S	32
24,00	35,80	36,00	8,00	A	*24X36X8	S	32
24,00	36,00	36,20	7,00	A	*24X36X7V	V	35
24,00	37,00	37,23	7,00	A	24X37X7	S	35
24,00	37,80	38,00	8,00	A	*24X38X8	S	32
24,00	37,80	38,00	8,50	A	*24X38X8.5	S	32
24,00	37,80	38,00	10,00	A	*24X38X10	S	32
24,00	38,00	38,20	7,00	A	24X38X7	S	32
24,00	39,80	40,00	8,00	A	*24X40X8	S	32
24,00	40,00	40,20	6,00	A	*24X40X6V	V	35
24,00	40,00	40,23	7,00	A	222430	S	35
24,00	40,00	40,23	7,00	A	24X40X7	S	35
24,00	42,00	42,20	7,00	A	24X42X7	S	32
24,00	42,00	42,25	8,00	A	*24X42X8	S	35
24,00	42,00	42,25	10,00	A	24X42X10	S	32
24,00	42,80	43,00	6,00	A	*24X43X6	S	32
24,00	42,80	43,00	7,00	A	*24X43X7	S	32
24,00	43,00	43,23	8,00	A	222450	S	25
24,00	44,80	45,00	6,00	A	*24X45X6	S	32
24,00	44,80	45,00	7,00	A	*24X45X7	S	32
24,00	44,80	45,00	11,00	A	*24X45X11	S	32
24,00	45,00	45,20	8,00	A	*24X45X8	S	32
24,00	45,80	46,00	10,00	A	*24X46X10	S	32
24,00	46,00	46,20	8,00	A	*24X46X8	S	32
24,00	46,80	47,00	10,00	A	*24X47X10	S	32
24,00	47,00	47,23	7,00	A	24X47X7	S	35
24,00	47,80	48,00	7,00	A	*24X48X7	S	32
24,00	48,00	48,20	8,00	A	*24X48X8	S	32
24,00	48,80	49,00	12,00	A	*24X49X12	S	32
24,00	50,00	50,20	8,00	A	*24X50X8	S	32
24,00	52,00	52,20	7,00	A	24X52X7	S	32
24,00	76,72	77,00	18,00	A	*24X77X18	S	32
25,00	31,80	32,00	4,00	A	*25X32X4	S	32
25,00	31,80	32,00	6,00	A	*25X32X6	S	32
25,00	31,80	32,00	7,00	A	*25X32X7	S	32
25,00	32,80	33,00	6,00	A	*25X33X6	S	32
25,00	33,80	34,00	5,00	A	*25X34X5	S	32
25,00	34,80	35,00	5,00	A	*25X35X5	S	32
25,00	34,80	35,00	8,00	A	*25X35X8	S	32
25,00	34,80	35,00	8,50	A	*25X35X8.5	S	32
25,00	34,80	35,00	9,00	A	*25X35X9	S	32
25,00	34,80	35,00	10,00	A	*25X35X10	S	32
25,00	35,00	35,10	7,00	A	*25X35X7V	V	48
25,00	35,00	35,20	6,00	A	25X35X6	S	32
25,00	35,00	35,25	7,00	A	25X35X7	S	35
25,00	35,00	35,25	7,00	A	222510	S	35
25,00	35,00	35,25	7,00	A	712007	V	48
25,00	35,80	36,00	6,00	A	*25X36X6	S	32
25,00	36,00	36,23	7,00	A	25X36X7	S	32
25,00	36,00	36,22	8,00	A	25X36X8	S	35
25,00	36,80	37,00	5,00	A	*25X37X5	S	32
25,00	36,80	37,00	6,00	A	*25X37X6	S	32
25,00	36,80	37,00	8,00	A	*25X37X8	S	32
25,00	37,00	37,20	5,00	A	*25X37X5V	V	35
25,00	37,00	37,20	7,00	A	25X37X7	S	32
25,00	37,00	37,26	7,00	A	320603➡	S	32
25,00	37,80	38,00	6,00	A	*25X38X6	S	32
25,00	37,80	38,00	8,00	A	*25X38X8	S	32
25,00	37,80	38,00	10,00	A	*25X38X10	S	32
25,00	38,00	38,20	7,00	A	*25X38X7V	V	35
25,00	38,00	38,23	7,00	A	25X38X7	S	35
25,00	38,00	38,23	7,00	A	222535	S	32
25,00	38,80	39,00	8,00	A	*25X39X8	S	32
25,00	39,80	40,00	5,00	A	*25X40X5	S	32
25,00	39,80	40,00	6,00	A	*25X40X6	S	32
25,00	39,80	40,00	6,00	A	*25X40X6	S	32
25,00	39,80	40,00	8,00	A	*25X40X8	S	32
25,00	39,80	40,00	10,00	A	*25X40X10	S	32
25,00	39,80	40,00	11,00	A	*25X40X11	S	32
25,00	39,80	40,00	12,00	A	*25X40X12	S	32
25,00	40,00	40,10	9,50	A	*450908	S	45
25,00	40,00	40,22	7,00	A	25X40X7	S	35
25,00	40,00	40,20	7,00	A	*25X40X7V	V	35
25,00	40,00	40,22	7,00	A	222540	S	47
25,00	40,00	40,20	7,00	A	710307⬅	N	32
25,00	40,00	40,20	8,00	A	710316➡	S	32
25,00	40,00	40,31	8,00	A	*324151	S	32
25,00	40,00	40,31	8,00	A	*324151N	N	32
24,99	40,54	40,64	6,35	A	712018	S	#
25,00	40,80	41,00	6,00	A	*25X41X6	S	32
25,00	40,80	41,00	7,00	A	*25X41X7	S	32
25,00	41,00	41,09	8,00	A	39867⬅	T	W-H
25,00	41,00	41,20	8,00	A	*25X41.2X8	S	32
25,00	41,05	41,25	6,00	A	*25X41.25X6	S	32
25,00	41,05	41,25	7,00	A	*25X41.25X7	S	32
24,99	41,25	41,35	11,10	A	*450811	S	45
25,00	41,30	41,50	7,00	A	*25X41.5X7	S	32
25,00	41,30	41,50	10,00	A	*25X41.5X10	S	32
25,00	41,80	42,00	5,50	A	*25X42X5.5	S	32
25,00	41,80	42,00	7,00	A	*25X42X7	S	32
25,00	41,80	42,00	8,50	A	*25X42X8.5	S	32
25,00	41,80	42,00	12,00	A	*25X42X12	S	32
25,00	42,00	42,20	6,00	A	25X42X6	S	35
25,00	42,00	42,20	7,00	A	*25X42X7V	V	32
25,00	42,00	42,20	8,00	A	25X42X8	S	32
25,00	42,00	42,30	8,00	A	222556➡	H	32

For Illustration and Material Data See Technical Section

Designed For A Specific Application - Not Recommended For General Use ➡ Hydrodynamic Lip Design-CW ⬅ Hydrodynamic Lip Design-CCW

* The U.S. customer service number is 877-4-TIMKEN. The Canadian customer service numbers are 800-565-4927 (English) and 800-565-0438 (French-Canadian).

Shaft Size	Hsg. Bore	Seal O.D.	Seal Width	Grp.	Part No.	Lip Mat'l	Illus./ Type
25,00	42,00	42,28	10,00	A	25X42X10	S	35
25,00	42,70	42,90	9,50	A	*25X42.9X9.5	S	32
25,00	42,80	43,00	7,00	A	*25X43X7	S	32
25,00	42,80	43,00	9,00	A	*25X43X9	S	32
25,00	42,80	43,00	10,00	A	*25X43X10	S	32
25,00	43,80	44,00	7,00	A	*25X44X7	S	32
25,00	43,80	44,00	8,00	A	*25X44X8	S	32
25,00	44,00	44,20	7,00	A	222558	S	32
25,00	44,25	44,45	10,00	A	*25X44.45X10	S	32
25,00	44,80	45,00	7,00	A	*25X45X7	S	32
25,00	44,80	45,00	9,00	A	*25X45X9	S	32
25,00	44,80	45,00	10,00	A	*25X45X10	S	32
25,00	44,80	45,00	11,00	A	*25X45X11	S	32
25,00	44,80	45,00	12,00	A	*25X45X12	S	32
25,00	45,00	45,23	8,00	A	25X45X8	S	35
25,00	46,00	46,20	7,00	A	25X46X7	S	32
25,00	46,00	46,20	8,00	A	*25X46X8	S	32
25,00	46,80	47,00	6,00	A	*25X47X6	S	32
25,00	46,80	47,00	8,00	A	*25X47X8	S	32
25,00	46,80	47,00	10,00	A	*25X47X10	S	32
25,00	47,00	47,20	10,00	A	*713114	N	47
25,00	47,00	47,10	9,50	A	*482583	S	48
25,00	47,00	47,20	10,00	A	*25X47X10V	V	35
25,00	47,00	47,23	7,00	A	25X47X7	S	35
25,00	47,80	48,00	7,00	A	*25X48X7	S	32
25,00	47,80	48,00	10,00	A	*25X48X10	S	32
25,00	48,00	48,20	8,00	A	25X48X8	S	32
25,00	48,80	49,00	10,00	A	*25X49X10	S	32
25,00	49,80	50,00	12,00	A	*25X50X12	S	32
25,00	50,00	50,20	8,00	A	25X50X8	S	32
25,00	50,00	50,20	10,00	A	*25X50X10V	V	35
25,00	50,00	50,28	10,00	A	25X50X10	S	35
25,00	51,75	52,00	9,50	A	*25X52X9.5	S	32
25,00	51,75	52,00	12,00	A	*25X52X12	S	32
25,00	52,00	52,10	7,90	A	*472184	S	47
25,00	52,00	52,20	7,00	A	*25X52X7V	V	35
25,00	52,00	52,20	8,00	A	25X52X8	S	35
25,00	52,00	52,20	10,00	A	25X52X10	S	35
25,00	52,00	52,27	7,00	A	25X52X7	S	35
24,99	52,37	52,48	11,10	A	**450693**	S	45
25,00	52,75	53,00	10,00	A	*25X53X10	S	32
25,00	54,00	54,20	8,00	A	*25X54X8	S	32
25,00	54,75	55,00	10,00	A	*25X55X10	S	32
25,00	54,75	55,00	12,00	A	*25X55X12	S	32
25,00	55,00	55,20	8,00	A	*25X55X8	S	32
25,00	56,00	56,20	8,00	A	*25X56X8	S	32
25,00	57,75	58,00	10,00	A	*25X58X10	S	32
25,00	58,00	58,20	8,00	A	*25X58X8	S	32
25,00	59,75	60,00	10,00	A	*25X60X10	S	32
25,00	60,00	60,20	8,00	A	*25X60X8	S	32
25,00	61,75	62,00	8,00	A	*25X62X8	S	32
25,00	62,00	62,20	7,00	A	25X62X7	S	32
25,00	62,00	62,20	7,00	A	*25X62X7V	V	35
25,00	62,00	62,28	10,00	A	25X62X10	S	32
25,00	62,00	62,28	10,00	A	222580	S	32
25,00	64,75	65,00	10,00	A	*25X65X10	S	32
25,00	65,75	66,00	8,50	A	*25X66X8.5	S	32
25,00	69,75	70,00	10,00	A	*25X70X10	S	32
25,00	71,75	72,00	8,00	A	*25X72X8	S	32
25,00	79,72	80,00	10,00	A	*25X80X10	S	32
25,50	38,50	38,70	8,50	A	710303	S	35
25,70	34,80	35,00	7,00	A	*25.7X35X7	S	32
26,00	34,80	35,00	7,00	A	*26X35X7	S	32
26,00	35,80	36,00	5,00	A	*26X36X5	S	32
26,00	35,80	36,00	7,00	A	*26X36X7	S	32
26,00	36,80	37,00	8,00	A	*26X37X8	S	32
26,00	37,00	37,20	7,00	A	26X37X7	S	32
26,00	37,80	38,00	7,00	A	*26X38X7	S	32
26,00	37,80	38,00	8,00	A	*26X38X8	S	32
26,00	38,00	38,20	5,00	A	26X38X5	S	32
26,00	38,00	38,20	8,00	A	222630	N	32
26,00	39,80	40,00	8,00	A	*26X40X8	S	32
26,00	39,80	40,00	10,00	A	*26X40X10	S	32
26,00	40,00	40,20	7,00	A	26X40X7	S	32
26,00	41,10	41,30	10,00	A	*26X41.3X10	S	32
26,00	41,80	42,00	8,00	A	*26X42X8	S	32
26,00	42,00	42,20	7,00	A	26X42X7	S	32
26,00	42,00	42,20	8,00	A	710399➡	S	32
26,00	42,00	42,23	10,00	A	26X42X10	S	35
26,00	42,80	43,00	8,00	A	*26X43X8	S	32
26,00	43,80	44,00	7,00	A	*26X44X7	S	32
26,00	44,00	44,20	8,00	A	710153	S	#
26,00	44,80	45,00	7,00	A	*26X45X7	S	32
26,00	44,80	45,00	10,00	A	*26X45X10	S	32
26,00	45,00	45,20	8,00	A	*26X45X8	S	32
26,00	46,00	46,20	8,00	A	*26X46X8	S	32
26,00	46,80	47,00	6,00	A	*26X47X6	S	32
26,00	46,80	47,00	8,00	A	*26X47X8	S	32
26,00	46,80	47,00	10,00	A	*26X47X10	S	32
26,00	46,80	47,00	11,00	A	*26X47X11	S	32
26,00	46,80	47,00	12,00	A	*26X47X12	S	32
26,00	47,00	47,23	7,00	A	26X47X7	S	35
26,00	47,80	48,00	8,00	A	*26X48X8	S	32
26,00	48,00	48,23	7,00	A	26X48X7	S	32
26,00	48,00	48,23	7,00	A	222655	S	32
26,00	49,80	50,00	7,00	A	*26X50X7	S	32
26,00	49,80	50,00	10,00	A	*26X50X10	S	32
26,00	50,00	50,20	8,00	A	*26X50X8	S	32
26,00	51,75	52,00	7,00	A	*26X52X7	S	32
26,00	52,00	52,20	8,00	A	26X52X8	S	32
26,00	61,75	62,00	9,00	A	*26X62X9	S	32
26,00	71,75	72,00	10,00	A	*26X72X10	S	32
27,00	35,80	36,00	6,00	A	*27X36X6	S	32
27,00	36,80	37,00	8,50	A	*27X37X8.5	S	32
27,00	37,00	37,15	7,00	A	27X37X7	S	35
27,00	37,00	37,20	7,00	A	*27X37X7V	V	35
27,00	37,00	37,30	7,00	A	*713034	V	32
27,00	37,80	38,00	5,00	A	*27X38X5	S	32
27,00	37,80	38,00	6,00	A	*27X38X6	S	32
27,00	39,80	40,00	6,00	A	*27X40X6	S	32
27,00	39,80	40,00	7,00	A	*27X40X7	S	32
27,00	39,80	40,00	8,00	A	*27X40X8	S	32
27,00	39,80	40,00	10,00	A	*27X40X10	S	32
27,00	39,80	40,00	12,00	A	*27X40X12	S	32

For Illustration and Material Data See Technical Section

Designed For A Specific Application - Not Recommended For General Use ➡ Hydrodynamic Lip Design-CW

* The U.S. customer service number is 877-4-TIMKEN. The Canadian customer service numbers are 800-565-4927 (English) and 800-565-0438 (French-Canadian).

Shaft Size	Hsg. Bore	Seal O.D.	Seal Width	Grp.	Part No.	Lip Mat'l	Illus./ Type
27,00	40,00	40,20	8,00	A	712009	V	32
27,00	41,00	41,10	9,50	A	*1193	S	#
27,00	41,80	42,00	5,00	A	*27X42X5	S	32
27,00	41,80	42,00	8,00	A	*27X42X8	S	32
27,00	42,00	42,10	7,00	A	222742	V	48
27,00	42,00	42,20	7,00	A	27X42X7	S	35
27,00	42,00	42,23	10,00	A	27X42X10	S	35
27,00	42,80	43,00	9,00	A	*27X43X9	S	32
27,00	43,00	43,20	8,00	A	27X43X8	S	32
27,00	43,00	43,20	9,00	A	222743⬅	H	32
27,00	43,00	43,25	9,00	A	1990➡	N	32
27,00	45,00	45,25	8,00	A	27X45X8	S	35
27,00	45,00	45,25	9,00	A	222745➡	N	32
27,00	46,00	46,20	8,00	A	*27X46X8	S	32
27,00	46,80	47,00	7,00	A	*27X47X7	S	32
27,00	47,00	47,23	8,00	A	*27X47X8	S	35
27,00	47,00	47,23	10,00	A	27X47X10	S	35
27,00	48,00	48,20	8,00	A	*27X48X8	S	32
27,00	49,80	50,00	10,00	A	*27X50X10	S	32
27,00	50,00	50,20	8,00	A	*27X50X8	S	32
27,00	52,00	52,20	8,00	A	27X52X8	S	35
27,00	52,75	53,00	7,00	A	*27X53X7	S	32
27,60	39,80	40,00	5,50	A	*27.6X40X5.5	S	32
28,00	–	47,00	8,00	A	*713115	V	32
28,00	34,80	35,00	5,00	A	*28X35X5	S	32
28,00	34,80	35,00	7,00	A	*28X35X7	S	32
28,00	34,80	35,00	10,00	A	*28X35X10	S	32
28,00	35,80	36,00	7,00	A	*28X36X7	S	32
28,00	37,80	38,00	5,00	A	*28X38X5	S	32
28,00	37,80	38,00	8,00	A	*28X38X8	S	32
28,00	38,00	38,20	7,00	A	*713087	N	35
28,00	38,00	38,20	10,00	A	710347⬅	S	32
28,00	38,00	38,23	7,00	A	28X38X7	S	35
28,00	38,00	38,25	7,00	A	712104➡	T	PDW
28,00	39,80	40,00	9,00	A	*28X40X9	S	32
28,00	39,80	40,00	10,00	A	*28X40X10	S	32
28,00	40,00	40,20	7,00	A	*28X40X7V	V	35
28,00	40,00	40,20	7,00	A	710325➡	S	32
28,00	40,00	40,20	8,00	A	28X40X8	S	32
28,00	40,00	40,26	7,00	A	28X40X7	S	35
28,00	40,00	40,31	7,00	A	*1107	S	33
28,00	40,00	40,34	7,00	A	222820	S	33
28,00	41,00	41,10	8,00	A	39869➡	T	#
28,00	41,00	41,27	7,00	A	222830⬅	N	32
28,00	41,05	41,25	6,00	A	*28X41.25X6	S	32
28,00	41,30	41,50	8,00	A	*28X41.5X8	S	32
28,00	41,80	42,00	6,00	A	*28X42X6	S	32
28,00	41,80	42,00	7,00	A	*28X42X7	S	32
28,00	41,80	42,00	10,00	A	*28X42X10	S	32
28,00	42,00	42,20	8,00	A	712008	H	32
28,00	42,00	42,20	10,00	A	*28X42X10V	V	35
28,00	42,00	42,23	8,00	A	28X42X8	S	35
28,00	42,30	42,50	8,00	A	*28X42.5X8	S	32
28,00	42,50	42,72	8,00	A	710216	S	35
28,00	42,80	43,00	6,00	A	*28X43X6	S	32
28,00	42,80	43,00	10,00	A	*28X43X10	S	32
28,00	43,00	43,23	7,00	A	710157➡	S	32
28,00	43,00	43,23	8,00	A	710119	N	32
28,00	43,80	44,00	7,00	A	*28X44X7	S	32
28,00	43,80	44,00	8,00	A	*28X44X8	S	32
28,00	44,00	44,20	6,00	A	222835	N	32
28,00	44,00	44,23	6,00	A	28X44X6	N	32
28,00	44,80	45,00	7,00	A	*28X45X7	S	32
28,00	44,80	45,00	8,70	A	*28X45X8.7	S	32
28,00	44,80	45,00	10,00	A	*28X45X10	S	32
28,00	45,00	45,20	7,00	A	*28X45X7V	V	35
28,00	45,00	45,20	8,00	A	28X45X8	S	32
28,00	46,00	46,20	8,00	A	*28X46X8	S	32
28,00	46,80	47,00	6,00	A	*28X47X6	S	32
28,00	46,80	47,00	9,00	A	*28X47X9	S	32
28,00	46,80	47,00	10,00	A	*28X47X10	S	32
28,00	46,89	47,00	8,00	A	*333860	S	33
28,00	47,00	47,20	7,00	A	*28X47X7V	V	35
28,00	47,00	47,22	7,00	A	28X47X7	S	35
28,00	47,00	47,22	8,00	A	*28X47X8	S	33
28,00	47,00	47,22	8,00	A	222860➡	N	32
28,00	47,00	47,30	8,00	A	*713035	V	32
28,00	47,00	47,30	8,00	A	*713036	V	35
28,00	47,80	48,00	7,00	A	*28X48X7	S	32
28,00	47,80	48,00	11,00	A	*28X48X11	S	32
28,00	48,00	48,20	8,00	A	28X48X8	S	32
28,00	48,00	48,30	8,00	A	*713037	N	48
28,00	49,80	50,00	10,00	A	*28X50X10	S	32
28,00	50,00	50,20	8,00	A	*28X50X8	S	32
28,00	50,75	51,00	10,00	A	*28X51X10	S	32
28,00	51,75	52,00	6,00	A	*28X52X6	S	32
28,00	51,75	52,00	8,00	A	*28X52X8	S	32
28,00	51,75	52,00	10,00	A	*28X52X10	S	32
28,00	52,00	52,20	7,00	A	*28X52X7V	V	32
28,00	52,00	52,23	7,00	A	28X52X7	S	35
28,00	55,75	56,00	6,00	A	*28X56X6	S	32
28,00	55,75	56,00	7,00	A	*28X56X7	S	32
28,00	57,75	58,00	6,00	A	*28X58X6	S	32
28,00	57,75	58,00	10,00	A	*28X58X10	S	32
28,00	61,75	62,00	10,00	A	*28X62X10	S	32
28,50	39,30	39,50	9,50	A	*28.5X39.5X9.5	S	32
28,60	39,80	40,00	8,00	A	*28.6X40X8	S	32
28,60	43,00	43,15	6,50	A	1989	S	47
29,00	42,80	43,00	8,00	A	*29X43X8	S	32
29,00	43,80	44,00	7,00	A	*29X44X7	S	32
29,00	44,80	45,00	9,00	A	*29X45X9	S	32
29,00	45,00	45,23	8,00	A	320595	S	32
29,00	45,80	46,00	10,00	A	*29X46X10	S	32
29,00	46,80	47,00	8,00	A	*29X47X8	S	32
29,00	46,80	47,00	10,00	A	*29X47X10	S	32
29,00	49,80	50,00	10,00	A	*29X50X10	S	32
29,00	55,75	56,00	10,00	A	*29X56X10	S	32
29,00	61,95	62,20	9,00	A	*29X62.2X9	S	32
30,00	36,80	37,00	6,00	A	*30X37X6	S	32
30,00	37,00	37,30	3,50	A	710401	S	#
30,00	37,80	38,00	5,00	A	*30X38X5	S	32
30,00	37,80	38,00	6,00	A	*30X38X6	S	32
30,00	37,80	38,00	7,00	A	*30X38X7	S	32
30,00	39,80	40,00	5,00	A	*30X40X5	S	32
30,00	39,80	40,00	8,00	A	*30X40X8	S	32
30,00	39,80	40,00	10,00	A	*30X40X10	S	32
30,00	39,80	40,00	12,00	A	*30X40X12	S	32
30,00	40,00	40,20	7,00	A	*30X40X7V	V	32

For Illustration and Material Data See Technical Section

Designed For A Specific Application - Not Recommended For General Use ➡ Hydrodynamic Lip Design-CW ⬅ Hydrodynamic Lip Design-CCW

* The U.S. customer service number is 877-4-TIMKEN. The Canadian customer service numbers are 800-565-4927 (English) and 800-565-0438 (French-Canadian).

Shaft Size	Hsg. Bore	Seal O.D.	Seal Width	Grp.	Part No.	Lip Mat'l	Illus./ Type
30,00	40,00	40,23	7,00	A	30X40X7	S	35
30,00	40,00	40,23	7,00	A	223005	S	48
30,00	40,00	40,25	7,00	A	1129	S	35
30,00	40,80	41,00	7,00	A	* 30X41X7	S	32
30,00	41,80	42,00	4,50	A	* 30X42X4.5	S	32
30,00	41,80	42,00	8,00	A	* 30X42X8	S	32
30,00	41,80	42,00	10,00	A	* 30X42X10	S	32
30,00	42,00	42,20	7,00	A	30X42X7	S	35
30,00	42,00	42,20	7,00	A	* 30X42X7V	V	32
30,00	42,00	42,20	7,00	A	223010➡	S	32
30,00	42,00	42,27	7,00	A	1970	S	35
30,00	42,00	42,30	7,00	A	* 713039	N	32
30,00	42,00	42,30	7,00	A	* 713040	V	32
30,00	42,80	43,00	7,00	A	* 30X43X7	S	32
30,00	42,80	43,00	8,00	A	* 30X43X8	S	32
30,00	42,80	43,00	8,50	A	* 30X43X8.5	S	32
30,00	42,80	43,00	9,00	A	* 30X43X9	S	32
30,00	43,00	43,30	8,00	A	* 713041	S	48
30,00	43,00	43,30	8,00	A	* 713042	N	32
30,00	43,00	44,00	8,00	A	* 713003	V	32
30,00	43,80	44,00	9,00	A	* 30X44X9	S	32
30,00	43,80	44,00	10,00	A	* 30X44X10	S	32
30,00	44,00	44,20	7,00	A	223012➡	N	32
30,00	44,00	44,28	7,00	A	30X44X7	S	25
30,00	44,00	44,30	8,00	A	* 713043	V	32
30,00	44,30	44,50	7,00	A	* 30X44.5X7	S	32
30,00	44,80	45,00	6,00	A	* 30X45X6	S	32
30,00	44,80	45,00	7,00	A	* 30X45X7	S	32
30,00	44,80	45,00	10,00	A	* 30X45X10	S	32
30,00	44,80	45,00	13,00	A	* 30X45X13	S	32
30,00	45,00	45,22	5,00	A	30X45X5	S	32
30,00	45,00	45,20	6,00	A	223014	S	32
30,00	45,00	45,20	8,00	A	30X45X8	S	32
30,00	45,00	45,20	8,00	A	* 30X45X8V	V	35
30,00	45,00	45,20	8,00	A	710359⬅	S	#
30,00	45,00	45,20	15,00	A	2016⬅	S	#
30,00	45,00	45,23	8,00	A	1981	S	35
30,00	45,80	46,00	8,00	A	* 30X46X8	S	32
30,00	46,00	46,20	7,00	A	30X46X7	S	32
30,00	46,00	46,23	7,00	A	223018	S	32
30,00	46,00	46,30	8,00	A	712001➡	N	32
30,00	46,80	47,00	5,00	A	* 30X47X5	S	32
30,00	46,80	47,00	6,00	A	* 30X47X6	S	32
30,00	46,80	47,00	8,00	A	* 30X47X8	S	32
30,00	46,80	47,00	10,00	A	* 30X47X10	S	32
30,00	47,00	47,25	8,00	A	* 713116	N	48
30,00	47,00	47,20	7,00	A	* 30X47X7V	V	32
30,00	47,00	47,25	7,00	A	30X47X7	S	35
30,00	47,00	47,25	8,00	A	223020	S	35
30,00	47,80	48,00	7,00	A	* 30X48X7	S	32
30,00	47,80	48,00	10,00	A	* 30X48X10	S	32
30,00	48,00	48,28	8,00	A	30X48X8	S	35
30,00	48,00	48,30	8,00	A	714619	S	35
30,00	48,30	48,50	8,00	A	* 30X48.5X8	S	32
30,00	48,80	49,00	8,00	A	* 30X49X8	S	32
30,00	49,80	50,00	10,00	A	* 30X50X10	S	32
30,00	49,80	50,00	11,00	A	* 30X50X11	S	32
30,00	49,80	50,00	11,00	A	* 30X50X11	S	32
30,00	49,80	50,00	12,00	A	* 30X50X12	S	32
30,00	50,00	50,20	8,00	A	30X50X8	S	48
30,00	50,00	50,20	10,00	A	* 30X50X10V	V	35
30,00	50,00	50,23	7,00	A	30X50X7	S	35
30,00	50,00	50,23	7,00	A	223050➡	S	32
30,00	50,00	52,20	13,50	A	* 713038	N	32
30,00	50,75	51,00	10,00	A	* 30X51X10	S	32
30,00	51,75	52,00	8,00	A	* 30X52X8	S	32
30,00	51,75	52,00	10,00	A	* 30X52X10	S	32
30,00	51,75	52,00	11,00	A	* 30X52X11	S	32
30,00	51,75	52,00	12,00	A	* 30X52X12	S	32
30,00	52,00	52,18	7,00	A	223035	S	35
30,00	52,00	52,20	7,00	A	* 713044	N	32
30,00	52,00	52,20	7,00	A	* 713045	V	35
30,00	52,00	52,20	7,00	A	* 713157➡	V	32
30,00	52,00	52,20	10,00	A	* 30X52X10V	V	32
30,00	52,00	52,23	7,00	A	30X52X7	S	35
30,00	52,00	52,80	7,00	A	* 713004	N	32
30,00	52,00	52,30	13,50	A	* 713002	N	32
30,00	53,75	54,00	9,00	A	* 30X54X9	S	32
30,00	54,00	54,20	9,00	A	710267	S	32
30,00	54,75	55,00	8,00	A	* 30X55X8	S	32
30,00	54,75	55,00	11,00	A	* 30X55X11	S	32
30,00	54,75	55,00	12,00	A	* 30X55X12	S	32
30,00	55,00	55,20	7,00	A	30X55X7	S	47
30,00	55,00	55,20	10,00	A	* 30X55X10V	V	32
30,00	55,00	55,28	10,00	A	30X55X10	S	35
30,00	55,75	56,00	10,00	A	* 30X56X10	S	32
30,00	55,75	56,00	12,00	A	* 30X56X12	S	32
30,00	56,00	56,20	8,00	A	30X56X8	S	35
30,00	56,75	57,00	10,00	A	* 30X57X10	S	32
30,00	57,75	58,00	10,00	A	* 30X58X10	S	32
30,00	58,00	58,09	9,50	A	3907⬅➡	N	57
30,00	58,00	58,20	8,00	A	* 30X58X8	S	32
30,00	58,00	63,50	13,90	A	* 3607⬅➡	N	57
30,00	59,75	60,00	7,00	A	* 30X60X7	S	32
30,00	59,75	60,00	10,00	A	* 30X60X10	S	32
30,00	60,00	60,20	8,00	A	* 30X60X8	S	32
30,00	61,75	62,00	5,00	A	* 30X62X5	S	32
30,00	61,75	62,00	8,00	A	* 30X62X8	S	32
30,00	61,75	62,00	9,00	A	* 30X62X9	S	32
30,00	61,75	62,00	10,00	A	* 30X62X10	S	32
30,00	61,75	62,00	11,00	A	* 30X62X11	S	32
30,00	61,75	62,00	12,00	A	* 30X62X12	S	32
30,00	62,00	62,10	7,00	A	* 473049V	V	47
30,00	62,00	62,10	9,50	A	* 471353	S	47
30,00	62,00	62,15	6,35	A	* 43493	S	4S
30,00	62,00	62,20	7,00	A	* 30X62X7V	V	35
30,00	62,00	62,28	7,00	A	30X62X7	S	35
30,00	64,75	65,00	10,00	A	* 30X65X10	S	32
30,00	65,00	65,20	8,00	A	* 30X65X8	S	32
30,00	65,00	65,23	34,00	A	710065	S	#
30,00	67,75	68,00	10,00	A	* 30X68X10	S	32
30,00	68,00	68,20	8,00	A	* 30X68X8	S	32
30,00	70,00	70,20	8,00	A	* 30X70X8	S	32
30,00	71,75	72,00	8,00	A	* 30X72X8	S	32
30,00	72,00	72,14	9,50	A	* 470442V	V	47
30,00	72,00	72,20	7,00	A	30X72X7	S	47
30,00	72,00	72,20	8,00	A	* 30X72X8V	V	32
30,00	72,00	72,27	10,00	A	30X72X10	S	35
30,00	74,75	75,00	9,00	A	* 30X75X9	S	32
30,00	74,75	75,00	10,00	A	* 30X75X10	S	32
30,00	76,72	77,00	9,00	A	* 30X77X9	S	32
30,00	76,72	77,00	10,00	A	* 30X77X10	S	32
30,00	79,72	80,00	10,00	A	* 30X80X10	S	32
30,20	42,00	42,10	6,00	A	710340	V	44

For Illustration and Material Data See Technical Section

Designed For A Specific Application - Not Recommended For General Use ➡ Hydrodynamic Lip Design-CW ⬅ Hydrodynamic Lip Design-CCW

⬅➡ Hydrodynamic Lip Design-Bidirectional

* The U.S. customer service number is 877-4-TIMKEN. The Canadian customer service numbers are 800-565-4927 (English) and 800-565-0438 (French-Canadian).

Shaft Size	Hsg. Bore	Seal O.D.	Seal Width	Grp.	Part No.	Lip Mat'l	Illus./ Type
30,50	51,75	52,00	8,00	A	*30.5X52X8	S	32
31,00	42,00	42,20	8,00	A	710172	V	35
31,00	44,00	44,20	8,00	A	31X44X8	S	32
31,00	46,00	46,20	8,00	A	710332⬅	N	32
31,00	46,00	46,28	8,00	A	1121⬅	V	32
31,00	46,80	47,00	10,00	A	*31X47X10	S	32
31,00	48,80	49,00	7,00	A	*31X49X7	S	32
31,00	49,80	50,00	8,00	A	*31X50X8	S	32
31,00	51,75	52,00	6,00	A	*31X52X6	S	32
31,00	51,75	52,00	7,00	A	*31X52X7	S	32
32,00	39,80	40,00	7,00	A	*32X40X7	S	32
32,00	39,80	40,00	10,00	A	*32X40X10	S	32
32,00	40,00	40,15	5,00	A	223210	S	34
32,00	40,80	41,00	7,00	A	*32X41X7	S	32
32,00	41,80	42,00	6,00	A	*32X42X6	S	32
32,00	42,00	42,20	7,00	A	32X42X7	S	35
32,00	42,00	42,20	8,00	A	32X42X8	S	32
32,00	42,00	42,20	8,00	A	710282	S	32
32,00	42,00	42,20	10,00	A	223215⬅	S	32
32,00	43,00	43,20	7,00	A	32X43X7	S	32
32,00	43,00	43,20	7,00	A	710370	S	32
32,00	43,00	43,28	4,00	A	*4596	N	35
32,00	43,80	44,00	5,00	A	*32X44X5	S	32
32,00	43,80	44,00	6,00	A	*32X44X6	S	32
32,00	43,80	44,00	7,00	A	*32X44X7	S	32
32,00	43,80	44,00	8,00	A	*32X44X8	S	32
32,00	43,80	44,00	8,00	A	*32X44X8	S	32
32,00	43,80	44,00	9,00	A	*32X44X9	S	32
32,00	43,80	44,00	10,00	A	*32X44X10	S	32
32,00	44,00	44,23	6,00	A	223220➡	N	32
32,00	44,30	44,50	8,00	A	*32X44.5X8	S	32
32,00	44,30	44,50	10,00	A	*32X44.5X10	S	32
32,00	44,80	45,00	6,00	A	*32X45X6	S	32
32,00	44,80	45,00	6,50	A	*32X45X6.5	S	32
32,00	44,80	45,00	8,00	A	*32X45X8	S	32
32,00	44,80	45,00	10,00	A	*32X45X10	S	32
32,00	45,00	45,21	6,00	A	320348➡	V	32
32,00	45,00	45,23	7,00	A	223230	S	32
32,00	45,00	45,23	7,00	A	32X45X7	S	32
32,00	45,80	46,00	7,00	A	*32X46X7	S	32
32,00	45,80	46,00	8,00	A	*32X46X8	S	32
32,00	46,00	46,20	6,00	A	*324115N	N	32
32,00	46,00	46,23	6,00	A	32X46X6	S	32
32,00	46,00	46,23	6,00	A	223235	N	32
32,00	46,80	47,00	6,00	A	*32X47X6	S	32
32,00	46,80	47,00	8,00	A	*32X47X8	S	32
32,00	46,80	47,00	10,00	A	*32X47X10	S	32
32,00	47,00	47,20	6,00	A	710310➡	N	32
32,00	47,00	47,20	7,00	A	*32X47X7V	V	32
32,00	47,00	47,20	8,00	A	*580387➡	S	32
32,00	47,00	47,23	7,00	A	32X47X7	S	35
32,00	47,00	47,24	10,00	A	3476➡	N	32
32,00	47,80	48,00	7,00	A	*32X48X7	S	32
32,00	47,80	48,00	10,00	A	*32X48X10	S	32
32,00	48,00	48,20	7,00	A	710327➡	S	32
32,00	48,00	48,20	8,00	A	32X48X8	S	35
32,00	48,00	48,20	8,00	A	*32X48X8V	V	35
31,50	48,00	48,20	9,00	A	223240	N	40
32,00	48,00	48,20	10,00	A	710317⬅	S	32
32,00	49,80	50,00	7,00	A	*32X50X7	S	32
32,00	49,80	50,00	10,00	A	*32X50X10	S	32
32,00	50,00	50,14	8,00	A	710164	V	48
32,00	50,00	50,20	10,00	A	*32X50X10V	V	35
32,00	50,00	50,23	8,00	A	**32X50X8**	S	35
32,00	50,00	50,23	8,00	A	223250➡	S	32
32,00	50,00	50,23	8,00	A	710415➡	S	32
32,00	51,75	52,00	8,00	A	*32X52X8	S	32
32,00	51,75	52,00	10,00	A	*32X52X10	S	32
32,00	51,75	52,00	11,00	A	*32X52X11	S	32
32,00	51,75	52,00	12,00	A	*32X52X12	S	32
32,00	52,00	52,20	7,00	A	*32X52X7V	V	35
32,00	52,00	52,20	10,00	A	710306⬅	S	32
32,00	52,00	52,25	11,00	A	1167	N	32
32,00	52,00	52,28	7,00	A	32X52X7	S	35
32,00	52,00	52,28	7,00	A	223255	S	35
32,00	52,00	52,28	11,00	A	223252⬅	N	32
32,00	52,00	52,40	135,00	A	*713146	N	32
32,00	52,75	53,00	7,00	A	*32X53X7	S	32
32,00	53,00	53,28	7,00	A	223253➡	N	32
32,00	53,75	54,00	8,00	A	*32X54X8	S	32
32,00	54,00	54,20	10,00	A	2008&	S	#
32,00	54,00	54,23	10,00	A	32X54X10	S	32
32,00	54,75	55,00	6,50	A	*32X55X6.5	S	32
32,00	54,75	55,00	7,00	A	*32X55X7	S	32
32,00	54,75	55,00	8,00	A	*32X55X8	S	32
32,00	54,75	55,00	10,00	A	*32X55X10	S	32
32,00	54,75	55,00	11,00	A	*32X55X11	S	32
32,00	55,75	56,00	8,00	A	*32X56X8	S	32
32,00	56,00	56,28	10,00	A	32X56X10	S	35
32,00	57,75	58,00	10,00	A	*32X58X10	S	32
32,00	57,75	58,00	12,00	A	*32X58X12	S	32
32,00	58,00	58,20	8,00	A	32X58X8	S	32
32,00	58,00	58,29	12,70	A	*1204	S	32
32,00	60,00	60,20	8,00	A	32X60X8	S	32
32,00	60,00	60,20	10,00	A	32X60X10	S	48
32,00	61,75	62,00	10,00	A	*32X62X10	S	32
32,00	61,75	62,00	12,00	A	*32X62X12	S	32
32,00	62,00	62,20	8,00	A	32X62X8	S	32
32,00	64,75	65,00	7,50	A	*32X65X7.5	S	32
32,00	64,75	65,00	8,00	A	*32X65X8	S	32
32,00	64,75	65,00	10,00	A	*32X65X10	S	32
32,00	69,75	70,00	8,00	A	*32X70X8	S	32
32,00	69,75	70,00	11,00	A	*32X70X11	S	32
32,00	71,75	72,00	10,00	A	*32X72X10	S	32
32,00	72,00	72,20	8,00	A	32X72X8	S	32
33,00	43,80	44,00	7,00	A	*33X44X7	S	32
33,00	43,80	44,00	8,00	A	*33X44X8	S	32
33,00	44,00	44,18	7,00	A	710070	S	47
33,00	44,80	45,00	8,00	A	*33X45X8	S	32
33,00	44,80	45,00	10,00	A	*33X45X10	S	32
33,00	45,80	46,00	7,00	A	*33X46X7	S	32
32,99	46,43	46,53	9,53	A	6370N	N	33
33,00	46,80	47,00	8,00	A	*33X47X8	S	32
33,00	47,00	47,20	8,00	A	223340➡	S	32
33,00	47,10	47,30	7,00	A	*33X47.3X7	S	32
33,00	47,80	48,00	6,00	A	*33X48X6	S	32
33,00	47,80	48,00	8,00	A	*33X48X8	S	32
33,00	49,00	49,23	8,00	A	710236➡	N	32
33,00	49,80	50,00	6,00	A	*33X50X6	S	32
33,00	49,80	50,00	7,00	A	*33X50X7	S	32

For Illustration and Material Data See Technical Section

Designed For A Specific Application - Not Recommended For General Use ➡ Hydrodynamic Lip Design-CW ⬅ Hydrodynamic Lip Design-CCW & Flanged O.D.

* The U.S. customer service number is 877-4-TIMKEN. The Canadian customer service numbers are 800-565-4927 (English) and 800-565-0438 (French-Canadian).

Shaft Size	Hsg. Bore	Seal O.D.	Seal Width	Grp.	Part No.	Lip Mat'l	Illus./ Type
33,00	49,80	50,00	10,00	A	*33X50X10	S	32
33,00	50,00	50,20	7,00	A	710328	S	35
33,00	50,00	50,25	12,00	A	33X50X12	S	32
33,00	50,00	50,25	12,00	A	1168	S	32
33,00	56,00	56,23	8,00	A	710132	N	#
33,00	51,75	52,00	5,00	A	*33X52X5	S	32
33,00	51,75	52,00	10,00	A	*33X52X10	S	32
32,99	51,92	52,02	12,45	A	3348⬅➡	S	47
33,00	52,00	52,25	6,00	A	33X52X6	S	32
33,00	54,75	55,00	10,00	A	*33X55X10	S	32
33,00	55,75	56,00	10,00	A	*33X56X10	S	32
33,00	55,75	56,00	12,00	A	*33X56X12	S	32
33,00	59,00	59,20	17,00	A	710124	N	#
33,00	61,75	62,00	7,00	A	*33X62X7	S	32
33,00	71,75	72,00	10,00	A	*33X72X10	S	32
33,00	89,90	89,60	40,00	A	5210⑤	N	35
34,00	41,80	42,00	5,00	A	*34X42X5	S	32
34,00	43,80	44,00	7,00	A	*34X44X7	S	32
34,00	43,80	44,00	8,00	A	*34X44X8	S	32
34,00	44,00	44,23	8,00	A	223400	N	32
34,00	45,00	45,20	8,00	A	34X45X8	S	32
34,00	45,80	46,00	8,00	A	*34X46X8	S	32
34,00	46,80	47,00	8,00	A	*34X47X8	S	32
34,00	46,80	47,00	9,00	A	*34X47X9	S	32
34,00	47,80	48,00	7,00	A	*34X48X7	S	32
34,00	47,80	48,00	8,00	A	*34X48X8	S	32
34,00	48,00	48,20	7,00	A	*580388➡	S	32
34,00	48,00	48,28	7,50	A	710416	S	35
34,00	48,00	48,28	7,50	A	223410	S	35
34,00	48,00	48,28	8,00	A	223420➡	N	32
34,00	49,80	50,00	7,00	A	*34X50X7	S	32
34,00	49,80	50,00	8,00	A	*34X50X8	S	32
34,00	49,80	50,00	10,00	A	*34X50X10	S	32
34,00	49,80	50,00	12,00	A	*34X50X12	S	32
34,00	50,00	50,20	8,00	A	223430➡	N	35
34,00	50,00	50,20	8,00	A	710417	N	35
34,00	51,75	52,00	10,00	A	*34X52X10	S	32
34,00	51,75	52,00	11,00	A	*34X52X11	S	32
34,00	52,00	52,28	8,00	A	34X52X8	S	32
34,00	52,75	53,00	8,00	A	*34X53X8	S	32
34,00	53,00	53,28	8,00	A	710418	N	32
34,00	53,00	53,28	8,00	A	223440	N	32
34,00	53,75	54,00	8,00	A	*34X54X8	S	32
34,00	54,00	54,20	9,00	A	34X54X9	S	35
34,00	54,00	54,25	9,00	A	710110⬅➡	N	40
34,00	54,75	55,00	11,00	A	*34X55X11	S	32
34,00	55,00	55,20	9,00	A	34X55X9	S	32
34,00	56,00	56,20	8,00	A	*34X56X8	S	32
34,00	57,75	58,00	10,00	A	*34X58X10	S	32
34,00	58,00	58,20	8,00	A	*34X58X8	S	32
34,00	60,00	60,20	8,00	A	*34X60X8	S	32
34,00	61,75	62,00	7,00	A	*34X62X7	S	32
34,00	61,75	62,00	14,00	A	*34X62X14	S	32
34,00	62,00	62,18	10,00	A	34X62X10	S	35
34,00	62,00	62,20	10,00	A	710422	S	35
34,00	62,00	62,20	10,00	A	223462	S	35
34,00	63,00	63,09	9,00	A	710109⬅➡	N	40
34,00	65,00	65,10	12,00	A	710151	S	47
34,00	69,75	70,00	10,00	A	*34X70X10	S	32
34,00	71,75	72,00	10,00	A	*34X72X10	S	32
34,00	71,75	72,00	12,00	A	*34X72X12	S	32
34,50	71,00	71,10	42,00	A	710250	N	#
35,00	41,80	42,00	6,00	A	*35X42X6	S	32
35,00	41,80	42,00	8,00	A	*35X42X8	S	32
35,00	43,80	44,00	7,00	A	*35X44X7	S	32
35,00	44,00	44,10	7,00	A	710383	S	47
35,00	44,80	45,00	6,00	A	*35X45X6	S	32
35,00	44,80	45,00	8,00	A	*35X45X8	S	32
35,00	44,80	45,00	10,00	A	*35X45X10	S	32
35,00	44,80	45,00	12,00	A	*35X45X12	S	32
35,00	45,00	45,15	7,00	A	35X45X7	S	35
35,00	45,80	46,00	10,00	A	*35X46X10	S	32
35,00	46,30	46,50	8,00	A	*35X46.5X8	S	32
35,00	46,80	47,00	7,50	A	*35X47X7.5	S	32
35,00	46,80	47,00	8,00	A	*35X47X8	S	32
35,00	46,80	47,00	10,00	A	*35X47X10	S	32
35,00	47,00	47,20	7,00	A	*35X47X7V	V	32
35,00	47,00	47,23	7,00	A	223510	S	35
35,00	47,00	47,23	7,00	A	35X47X7	S	35
35,00	47,00	47,40	7,00	A	1172➡	H	32
35,00	47,80	48,00	7,00	A	*35X48X7	S	32
35,00	47,80	48,00	9,00	A	*35X48X9	S	32
35,00	47,80	48,00	10,00	A	*35X48X10	S	32
35,00	48,00	48,21	7,60	A	320249➡	V	32
35,00	48,00	48,20	8,00	A	35X48X8	S	32
35,00	48,00	48,20	8,00	A	714436	S	32
35,00	48,00	48,25	14,00	A	1215	N	#
35,00	48,00	48,25	14,00	A	1215N	N	#
35,00	48,00	48,28	15,00	A	710051&	S	86
35,00	48,00	48,40	7,00	A	1108➡	V	32
35,00	48,00	48,80	2,00	A	*713005	N	47
35,00	48,80	49,00	6,00	A	*35X49X6	S	32
35,00	48,80	49,00	8,00	A	*35X49X8	S	32
35,00	49,00	49,30	8,00	A	710178	S	#
35,00	49,21	49,63	6,00	A	1987	N	33
35,00	49,30	49,50	10,00	A	*35X49.5X10	S	32
35,00	49,60	49,83	11,00	A	1940➡	N	32
35,00	49,80	50,00	9,00	A	*35X50X9	S	32
35,00	49,80	50,00	10,00	A	*35X50X10	S	32
35,00	49,80	50,00	11,00	A	*35X50X11	S	32
35,00	50,00	50,20	7,00	A	35X50X7	S	35
35,00	50,00	50,20	8,00	A	*35X50X8V	V	32
35,00	50,00	50,20	8,00	A	710329⬅	H	32
35,00	50,00	50,20	11,00	A	710324⬅	S	32
35,00	50,00	50,24	8,00	A	35X50X8	S	35
35,00	50,00	50,24	8,00	A	223520	S	35
35,00	50,00	50,25	10,00	A	*1980➡	H	32
35,00	50,00	50,24	12,00	A	*1169	N	32
35,00	50,00	50,30	8,00	A	*713150	N	35
35,00	50,00	50,30	9,00	A	*713046	V	35
35,00	50,00	50,28	11,50	A	710111⬅	N	#
35,00	50,00	50,34	7,00	A	3771➡	H	35
35,00	50,00	50,34	7,00	A	713771➡	V	35
35,00	50,00	50,80	10,00	A	*713006	N	47
35,00	50,00	50,80	10,00	A	*713007	V	32
35,00	50,75	51,00	7,00	A	*35X51X7	S	32
35,00	50,75	51,00	8,00	A	*35X51X8	S	32
35,00	50,75	51,00	10,00	A	*35X51X10	S	32
35,00	51,75	52,00	9,00	A	*35X52X9	S	32

For Illustration and Material Data See Technical Section
Designed For A Specific Application - Not Recommended For General Use ➡ Hydrodynamic Lip Design-CW ⬅ Hydrodynamic Lip Design-CCW
⬅➡ Hydrodynamic Lip Design-Bidirectional ⑤ Seal & Installation Sleeve & Flanged O.D.
* The U.S. customer service number is 877-4-TIMKEN. The Canadian customer service numbers are 800-565-4927 (English) and 800-565-0438 (French-Canadian).

Shaft Size	Hsg. Bore	Seal O.D.	Seal Width	Grp.	Part No.	Lip Mat'l	Illus./ Type
35,00	51,75	52,00	10,00	A	∗35X52X10	S	32
35,00	51,75	52,00	11,00	A	∗35X52X11	S	32
35,00	51,75	52,00	12,00	A	∗35X52X12	S	32
35,00	52,00	52,10	7,90	A	∗484063	S	48
35,00	52,00	52,13	8,00	A	35X52X8	S	33
35,00	52,00	52,13	8,00	A	223535	S	33
35,00	52,00	52,13	8,00	A	∗4052➡	N	47
35,00	52,00	52,13	8,50	A	∗1077	S	33
35,00	52,00	52,20	7,00	A	35X52X7	S	35
35,00	52,00	52,25	10,00	A	1170	S	32
35,00	52,00	52,35	7,75	A	3655➡	N	32
35,00	52,00	52,35	7,75	A	713655⬅	N	32
35,00	53,26	53,67	7,75	A	4040N⬅	N	32
35,00	53,75	54,00	10,00	A	∗35X54X10	S	32
35,00	54,00	54,10	8,00	A	710217	S	#
35,00	54,00	54,10	9,00	A	710199⬅➡	N	#
35,00	54,00	54,20	8,00	A	35X54X8	S	35
35,00	54,00	54,20	8,00	A	710331⬅	V	32
35,00	54,00	54,20	10,00	A	∗35X54X10V	V	35
35,00	54,00	54,30	8,00	A	1119➡	V	32
35,00	54,75	55,00	7,00	A	∗35X55X7	S	32
35,00	54,75	55,00	9,00	A	∗35X55X9	S	32
35,00	54,75	55,00	10,00	A	∗35X55X10	S	32
35,00	54,75	55,00	12,00	A	∗35X55X12	S	32
35,00	54,89	55,04	14,66	A	3543⬅➡	H	57
35,00	55,00	55,18	8,00	A	473823	S	47
35,00	55,00	55,20	10,00	A	∗35X55X10V	V	32
35,00	55,00	55,20	10,00	A	∗713117	N	47
35,00	55,00	55,10	8,00	A	35X55X8	S	47
35,00	55,00	55,23	11,00	A	35X55X11	S	32
35,00	55,00	55,23	11,00	A	223542	N	32
35,00	55,00	55,30	11,00	A	∗1171	S	32
35,00	55,00	55,45	8,00	A	223540⬅➡	N	32
35,00	55,75	56,00	5,80	A	∗35X56X5.8	S	32
35,00	55,75	56,00	12,00	A	∗35X56X12	S	32
35,00	56,00	56,10	16,00	A	710218	V	#
35,00	56,00	56,20	8,00	A	35X56X8	S	35
35,00	56,00	56,20	8,00	A	710314⬅	N	40
35,00	56,00	56,20	8,00	A	710315➡	S	40
35,00	56,00	56,20	9,00	A	710396⬅➡	S	40
35,00	56,00	56,20	10,00	A	∗35X56X10V	V	35
35,00	56,00	56,27	10,00	A	35X56X10	S	32
35,00	56,00	56,27	10,00	A	223543	S	32
35,00	56,00	56,27	10,00	A	∗320857	S	32
35,00	56,00	56,30	9,00	A	2007➡	S	#
35,00	56,00	56,30	9,00	A	2007N➡	S	#
35,00	56,75	57,00	9,00	A	∗35X57X9	S	32
35,00	56,75	57,00	10,00	A	∗35X57X10	S	32
35,00	56,90	57,05	18,64	A	∗4150N⬅➡	N	#
35,00	56,90	57,05	19,41	A	710096⬅➡	N	74
35,00	57,00	57,30	15,27	A	100165	S	#
35,00	57,75	58,00	9,00	A	∗35X58X9	S	32
35,00	57,75	58,00	12,00	A	∗35X58X12	S	32
35,00	57,75	58,00	13,00	A	∗35X58X13	S	32
35,00	57,75	58,00	18,00	A	∗35X58X18	S	32
35,00	58,00	58,10	10,00	A	223550	S	45
35,00	58,00	58,14	11,90	A	∗1086	S	33
35,00	58,00	58,28	10,00	A	35X58X10	S	35
35,00	58,00	58,80	10,00	A	∗713008	N	47
35,00	58,00	58,80	10,00	A	∗713009	N	32
35,00	58,75	59,00	12,00	A	∗35X59X12	S	32
35,00	59,75	60,00	8,00	A	∗35X60X8	S	32
35,00	59,75	60,00	11,00	A	∗35X60X11	S	32
35,00	59,75	60,00	12,00	A	∗35X60X12	S	32
35,00	60,00	60,23	10,00	A	35X60X10	S	35
35,00	60,00	60,23	10,00	A	223551	S	35
35,00	60,00	60,23	10,00	A	710424	S	35
35,00	60,00	60,30	12,00	A	710201	S	47
35,00	61,75	62,00	6,00	A	∗35X62X6	S	32
35,00	61,75	62,00	8,00	A	∗35X62X8	S	32
35,00	61,75	62,00	8,00	A	∗35X62X8	S	32
35,00	61,75	62,00	9,50	A	∗35X62X9.5	S	32
35,00	61,75	62,00	11,00	A	∗35X62X11	S	32
35,00	61,75	62,00	12,00	A	∗35X62X12	S	32
35,00	62,00	62,20	7,00	A	∗35X62X7V	V	35
35,00	62,00	62,20	10,00	A	35X62X10	S	35
35,00	62,00	62,28	7,00	A	35X62X7	S	35
35,00	62,00	62,28	8,00	A	4901⬅➡	N	40
35,00	62,00	62,28	9,00	A	223553➡	N	40
35,00	62,00	62,28	9,50	A	223552	S	32
35,00	63,00	63,20	9,00	A	710138⬅➡	S	40
35,00	63,00	63,28	10,00	A	710419	S	#
35,00	63,00	63,28	10,00	A	223554	S	#
35,00	63,45	63,55	7,92	A	∗6952S	S	#
35,00	63,50	63,83	11,05	A	7687S	S	#
35,00	63,75	64,00	12,00	A	∗35X64X12	S	32
35,00	63,75	64,00	13,00	A	∗35X64X13	S	32
35,00	64,00	64,13	8,00	A	35X64X8	N	47
35,00	64,00	64,13	8,00	A	223555	N	47
35,00	64,00	64,14	9,50	A	∗474125N	N	47
35,00	64,75	65,00	12,00	A	∗35X65X12	S	32
35,00	65,00	65,20	8,00	A	35X65X8	S	32
35,00	65,00	65,20	10,00	A	35X65X10	S	32
35,00	65,00	65,20	12,00	A	710335	S	32
35,00	67,00	67,27	12,00	A	1173	N	32
35,00	67,75	68,00	6,00	A	∗35X68X6	S	32
35,00	68,00	68,16	9,00	A	223580➡	S	40
35,00	68,00	68,20	9,00	A	710336⬅	N	40
35,00	68,00	68,20	10,00	A	∗35X68X10V	V	35
35,00	68,00	68,23	10,00	A	∗35X68X10	S	35
35,00	68,00	68,23	12,50	A	∗1140	N	32
35,00	69,00	69,20	8,00	A	∗35X69X8	S	32
35,00	69,75	70,00	10,00	A	∗35X70X10	S	32
35,00	70,00	70,20	8,00	A	35X70X8	S	32
35,00	71,75	72,00	7,00	A	∗35X72X7	S	32
35,00	71,75	72,00	11,00	A	∗35X72X11	S	32
35,00	71,75	72,00	12,00	A	∗35X72X12	S	32
35,00	72,00	72,20	8,00	A	35X72X8	S	32
35,00	72,00	72,20	10,00	A	∗35X72X10V	V	35
35,00	72,00	72,28	10,00	A	35X72X10	S	35
35,00	72,00	72,28	10,00	A	710360	S	35
35,00	74,75	75,00	8,00	A	∗35X75X8	S	32
35,00	76,00	76,28	9,00	A	1147➡	N	32
35,00	76,00	76,30	12,50	A	1136⬅	N	30
35,00	78,00	78,20	8,00	A	∗35X78X8	S	32
35,00	79,72	80,00	10,00	A	∗35X80X10	S	32
35,00	79,72	80,00	12,00	A	∗35X80X12	S	32
35,00	79,72	80,00	13,00	A	∗35X80X13	S	32
35,00	80,00	80,20	8,00	A	35X80X8	S	32
35,00	81,72	82,00	7,00	A	∗35X82X7	S	32
36,00	43,80	44,00	5,00	A	∗36X44X5	S	32
36,00	44,00	44,23	5,00	A	710252	S	32
36,00	45,80	46,00	6,00	A	∗36X46X6	S	32
36,00	45,80	46,00	9,00	A	∗36X46X9	S	32
36,00	46,00	46,10	9,00	A	710343	S	33

For Illustration and Material Data See Technical Section

Designed For A Specific Application - Not Recommended For General Use ➡ Hydrodynamic Lip Design-CW ⬅ Hydrodynamic Lip Design-CCW

⬅➡ Hydrodynamic Lip Design-Bidirectional

∗ The U.S. customer service number is 877-4-TIMKEN. The Canadian customer service numbers are 800-565-4927 (English) and 800-565-0438 (French-Canadian).

Shaft Size	Hsg. Bore	Seal O.D.	Seal Width	Grp.	Part No.	Lip Mat'l	Illus./ Type
36,00	46,80	47,00	8,00	A	*36X47X8	S	32
36,00	47,00	47,20	7,00	A	36X47X7	S	35
36,00	47,00	47,20	7,00	A	223601	S	35
36,00	47,80	48,00	7,00	A	*36X48X7	S	32
36,00	47,80	48,00	10,00	A	*36X48X10	S	32
36,00	48,80	49,00	7,00	A	*36X49X7	S	32
36,00	49,00	49,28	7,00	A	223602➡	N	32
36,00	49,80	50,00	10,00	A	*36X50X10	S	32
36,00	50,00	50,08	7,00	A	36X50X7	S	47
36,00	50,00	50,08	7,00	A	223605	S	47
36,00	50,00	50,08	7,00	A	*474097	S	47
36,00	50,00	50,20	8,00	A	710341⬅	S	32
36,00	50,75	51,00	7,00	A	*36X51X7	S	32
36,00	51,75	52,00	8,00	A	*36X52X8	S	32
36,00	51,75	52,00	10,00	A	*36X52X10	S	32
36,00	52,00	52,20	7,00	A	36X52X7	S	35
36,00	52,00	52,20	7,00	A	*36X52X7V	V	32
36,00	52,00	52,20	10,00	A	223608⬅	S	32
36,00	53,75	54,00	7,00	A	*36X54X7	S	32
36,00	53,75	54,00	10,00	A	*36X54X10	S	32
36,00	54,00	54,20	7,50	A	*36X54X8V	V	35
36,00	54,00	54,20	7,50	A	36X54X7.5	S	35
36,00	54,00	54,20	8,00	A	36X54X8	S	35
36,00	54,00	54,28	7,00	A	710197	N	40
36,00	54,00	54,28	7,50	A	223610	S	35
36,00	54,75	55,00	10,00	A	*36X55X10	S	32
36,00	54,75	55,00	12,00	A	*36X55X12	S	32
36,00	55,00	55,09	6,50	A	2003	S	47
36,00	55,00	55,09	6,50	A	2003N	S	47
36,00	55,00	55,09	6,50	A	*474113	S	47
36,00	55,00	55,12	9,50	A	*474121	S	47
36,00	55,75	56,00	12,00	A	*36X56X12	S	32
36,00	56,00	56,20	10,00	A	*713066	N	#
36,00	56,00	56,20	13,50	A	*713067	N	#
36,00	56,00	56,25	10,00	A	36X56X10	S	35
36,00	56,00	56,80	9,00	A	*713010	V	25
36,00	58,00	58,25	8,00	A	36X58X8	S	47
36,00	58,00	58,23	12,00	A	36X58X12	S	35
36,00	58,00	58,30	8,00	A	474288	S	47
36,00	59,75	60,00	6,00	A	*36X60X6	S	32
36,00	60,00	60,20	7,00	A	36X60X7	S	32
36,00	60,00	60,20	8,00	A	1965	V	48
36,00	61,75	62,00	10,00	A	*36X62X10	S	32
36,00	62,00	62,28	7,00	A	36X62X7	S	32
36,00	63,25	63,50	13,00	A	*36X63.5X13	S	32
36,00	64,00	64,20	11,00	A	710152	S	#
36,00	65,00	65,20	8,00	A	710057	S	48
36,00	68,00	68,18	8,00	A	223620➡	S	48
36,00	68,00	68,28	10,00	A	36X68X10	S	35
36,00	70,00	70,20	8,00	A	*36X70X8	S	32
36,00	72,00	72,20	8,00	A	*36X72X8	S	32
36,50	61,75	62,00	7,00	A	*36.5X62X7	S	32
37,00	46,80	47,00	10,00	A	*37X47X10	S	32
37,00	50,00	50,25	6,00	A	223750➡	N	32
37,00	50,50	50,70	7,00	A	710355➡	N	32
37,00	52,00	52,15	6,00	A	710149	S	#
37,00	52,00	52,28	8,00	A	37X52X8	S	35
37,00	52,75	53,00	7,00	A	*37X53X7	S	32
37,00	54,75	55,00	8,00	A	*37X55X8	S	32
37,00	56,00	56,20	12,50	A	710259⬅➡	V	32
37,00	56,75	57,00	10,00	A	*37X57X10	S	32
37,00	57,75	58,00	7,00	A	*37X58X7	S	32
37,00	57,75	58,00	10,00	A	*37X58X10	S	32
37,00	57,75	58,00	13,00	A	*37X58X13	S	32
37,00	58,00	58,10	10,00	A	710353➡	S	66
37,00	62,00	62,23	10,00	A	710228	S	40
37,00	63,75	64,00	13,00	A	*37X64X13	S	32
37,00	78,00	78,30	12,00	A	239134	S	#
38,00	46,80	47,00	7,00	A	*38X47X7	S	32
38,00	47,00	47,10	7,00	A	223805	S	25
38,00	47,00	47,25	8,00	A	*38X47X8	S	25
38,00	47,80	48,00	6,00	A	*38X48X6	S	32
38,00	47,80	48,00	7,00	A	*38X48X7	S	32
38,00	47,80	48,00	10,00	A	*38X48X10	S	32
38,00	49,80	50,00	8,00	A	*38X50X8	S	32
38,00	49,80	50,00	10,00	A	*38X50X10	S	32
38,00	50,00	50,20	7,00	A	*38X50X7V	V	35
38,00	50,00	50,25	6,00	A	223802➡	N	32
38,00	50,00	50,25	7,00	A	38X50X7	S	35
38,00	50,00	50,28	8,00	A	223801	S	32
38,00	50,00	50,28	10,50	A	223800➡	N	32
38,00	50,75	51,00	7,00	A	*38X51X7	S	32
38,00	51,75	52,00	6,00	A	*38X52X6	S	32
38,00	51,75	52,00	8,00	A	*38X52X8	S	32
38,00	51,75	52,00	9,00	A	*38X52X9	S	32
38,00	51,75	52,00	10,00	A	*38X52X10	S	32
38,00	52,00	52,20	6,00	A	710309	S	#
38,00	52,00	52,20	7,00	A	**38X52X7**	S	32
38,00	52,00	52,20	7,00	A	*38X52X7V	V	35
38,00	52,00	52,20	9,00	A	239128	S	#
38,00	52,00	52,25	6,00	A	1196	S	47
38,00	52,00	52,25	8,50	A	38X52X8.5	S	32
38,00	52,00	52,25	8,50	A	1174	S	32
38,00	52,00	52,25	8,50	A	*320833	S	32
38,00	52,00	52,30	8,00	A	1966➡	H	35
38,00	52,00	52,30	10,00	A	*713047	S	48
38,00	52,04	52,15	6,35	A	3357&	S	283
38,00	52,27	52,40	6,35	A	482415	S	48
38,00	52,35	52,60	6,00	A	*38X52.6X6	S	32
38,00	52,91	53,01	8,26	A	*293751	S	29
38,00	53,00	53,20	8,00	A	38X53X8	S	32
38,00	53,00	53,30	8,00	A	1120⬅	V	32
38,00	54,00	54,10	25,00	A	39875➡	T	#
38,00	54,00	54,18	7,00	A	38X54X7	S	48
38,00	54,00	54,18	10,00	A	38X54X10	S	32
38,00	54,00	54,20	10,00	A	*38X54X10V	V	35
38,00	54,00	54,30	7,00	A	239146	S	48
38,00	54,75	55,00	6,00	A	*38X55X6	S	32
38,00	54,75	55,00	8,00	A	*38X55X8	S	32
38,00	54,75	55,00	9,00	A	*38X55X9	S	32
38,00	54,75	55,00	10,00	A	*38X55X10	S	32
38,00	55,00	55,23	7,00	A	38X55X7	N	35
38,00	55,00	55,28	7,00	A	223830	N	35
38,00	55,00	55,30	9,00	A	223831➡	N	32
38,00	55,75	56,00	7,00	A	*38X56X7	S	32
38,00	55,75	56,00	12,00	A	*38X56X12	S	32
38,00	56,00	56,20	10,00	A	*38X56X10V	V	35
38,00	56,00	56,28	10,00	A	38X56X10	S	35
38,00	56,00	56,30	13,50	A	*713048	N	47
38,00	56,75	57,00	10,00	A	*38X57X10	S	32
38,00	57,75	58,00	7,00	A	*38X58X7	S	32
38,00	57,75	58,00	10,00	A	*38X58X10	S	32

For Illustration and Material Data See Technical Section

Designed For A Specific Application - Not Recommended For General Use ➡ Hydrodynamic Lip Design-CW ⬅ Hydrodynamic Lip Design-CCW

⬅➡ Hydrodynamic Lip Design-Bidirectional & Flanged O.D.

* The U.S. customer service number is 877-4-TIMKEN. The Canadian customer service numbers are 800-565-4927 (English) and 800-565-0438 (French-Canadian).

Metric List Sizes & Type

Shaft Size	Hsg. Bore	Seal O.D.	Seal Width	Grp.	Part No.	Lip Mat'l	Illus./ Type
38,00	57,75	58,00	11,00	A	*38X58X11	S	32
38,00	58,00	58,10	11,00	A	710319	S	47
38,00	58,00	58,11	8,00	A	38X58X8	S	47
38,00	58,00	58,11	8,00	A	223840	S	47
38,00	58,00	58,11	8,00	A	223842	V	48
38,00	58,00	58,11	8,00	A	*474119	S	47
38,00	58,00	58,20	10,00	A	710139	N	#
38,00	58,00	58,25	11,00	A	1175➡	S	32
38,00	59,00	59,30	9,00	A	1038➡	N	32
38,00	59,75	60,00	9,00	A	*38X60X9	S	32
38,00	60,00	60,20	8,00	A	38X60X8	S	32
38,00	60,00	60,20	10,00	A	*38X60X10V	V	35
38,00	60,00	60,35	10,00	A	38X60X10	S	35
38,00	60,00	60,35	10,00	A	223843	S	35
38,00	60,25	60,50	12,00	A	*38X60.5X12	S	32
38,00	61,75	62,00	9,00	A	*38X62X9	S	32
38,00	61,75	62,00	10,00	A	*38X62X10	S	32
38,00	61,75	62,00	12,00	A	*38X62X12	S	32
38,00	62,00	62,10	6,00	A	710224	S	49
38,00	62,00	62,20	7,00	A	*38X62X7V	V	32
38,00	62,00	62,24	13,00	A	710209	N	#
38,00	62,00	62,28	7,00	A	38X62X7	S	35
38,00	63,00	63,12	10,00	A	2009	N	#
38,00	63,25	63,50	10,00	A	*38X63.5X10	S	32
38,00	64,75	65,00	10,00	A	*38X65X10	S	32
38,00	64,75	65,00	11,00	A	*38X65X11	S	32
38,00	64,75	65,00	13,00	A	*38X65X13	S	32
38,00	65,00	65,20	8,00	A	38X65X8	S	32
38,00	65,00	65,20	8,00	A	710435	S	32
38,00	65,00	65,27	12,00	A	1176	N	#
38,00	68,00	68,20	8,00	A	38X68X8	S	32
38,00	68,00	68,20	8,00	A	710165	S	#
38,00	68,00	68,20	10,00	A	38X68X10	S	32
38,00	70,00	70,20	10,00	A	38X70X10	S	35
38,00	71,75	72,00	12,00	A	*38X72X12	S	32
38,00	72,00	72,20	10,00	A	38X72X10	S	35
38,00	74,00	74,20	8,00	A	38X74X8	S	32
38,00	74,00	74,20	11,00	A	38X74X11	N	32
38,00	74,00	74,27	11,00	A	1177	N	32
38,00	74,00	74,27	11,00	A	*320834	S	32
38,00	75,00	75,20	8,00	A	*38X75X8	S	32
38,00	78,00	78,20	8,00	A	*38X78X8	S	32
38,00	79,72	80,00	10,00	A	*38X80X10	S	32
38,00	80,00	80,20	8,00	A	*38X80X8	S	32
38,00	90,00	90,20	8,00	A	*38X90X8	S	32
38,50	53,00	53,23	8,00	A	710233➡	N	32
38,50	58,00	58,20	8,50	A	710318➡	N	32
39,00	50,00	50,29	11,00	A	710120	N	#
39,00	50,50	50,75	8,50	A	1126	S	25
39,00	50,75	51,00	7,50	A	*39X51X7.5	S	32
39,00	50,80	51,00	7,50	A	1128	S	35
39,00	52,00	52,10	6,00	A	710338	S	66
39,00	52,00	52,10	11,30	A	1205N	S	47
39,00	52,00	52,30	11,30	A	1205	S	47
39,00	54,00	54,10	6,00	A	710404	S	49
39,00	54,75	55,00	9,00	A	*39X55X9	S	32
39,00	55,00	55,11	7,50	A	710158	S	40
39,00	55,75	56,00	7,00	A	*39X56X7	S	32
39,00	57,00	57,20	17,00	A	710123	N	40
39,00	57,00	57,20	21,50	A	710122	N	40
39,00	57,00	57,38	9,65	A	324204➡	V	32
39,00	58,75	59,00	8,00	A	*39X59X8	S	32
39,00	59,00	59,28	11,00	A	710214	N	40
39,00	59,00	59,30	11,00	A	710118	S	40
39,00	64,75	65,00	8,00	A	*39X65X8	S	32
39,60	51,75	52,00	11,00	A	*39.6X52X11	S	32
40,00	49,80	50,00	5,00	A	*40X50X5	S	32
40,00	49,80	50,00	6,50	A	*40X50X6.5	S	32
40,00	49,80	50,00	7,00	A	*40X50X7	S	32
40,00	49,80	50,00	10,00	A	*40X50X10	S	32
40,00	50,00	50,20	8,00	A	40X50X8	S	35
40,00	51,75	52,00	6,00	A	*40X52X6	S	32
40,00	51,75	52,00	8,00	A	*40X52X8	S	32
40,00	51,75	52,00	9,00	A	*40X52X9	S	32
40,00	51,75	52,00	10,00	A	*40X52X10	S	32
40,00	52,00	52,12	7,50	A	*3967	S	#
40,00	52,00	52,12	8,00	A	*3609	S	47
40,00	52,00	52,12	8,50	A	1962&	S	78
40,00	52,00	52,20	6,00	A	710308➡	S	32
40,00	52,00	52,20	6,50	A	239201&	S	32
40,00	52,00	52,20	7,00	A	*40X52X7V	V	32
40,00	52,00	52,22	9,00	A	4175	S	#
40,00	52,00	52,25	6,00	A	1178	S	32
40,00	52,00	52,25	7,00	A	40X52X7	S	35
40,00	52,00	52,28	7,00	A	224010	S	35
40,00	52,00	52,28	7,00	A	224015	S	32
40,00	52,00	52,28	7,00	A	224052➡	H	32
40,00	52,00	52,28	9,00	A	1217&	N	35
40,00	52,75	53,00	8,00	A	*40X53X8	S	32
40,00	53,75	54,00	7,00	A	*40X54X7	S	32
40,00	53,75	54,00	8,00	A	*40X54X8	S	32
40,00	53,75	54,00	10,00	A	*40X54X10	S	32
40,00	53,90	54,00	6,00	A	710444⬅	S	32
40,00	54,00	54,10	5,50	A	1213	S	47
40,00	54,00	54,10	5,50	A	1213N	S	47
40,00	54,00	54,10	8,00	A	710311	S	25
40,00	54,00	54,20	5,50	A	40X54X6	S	47
40,00	54,00	54,20	10,00	A	710287⬅➡	N	32
40,00	54,75	55,00	7,00	A	*40X55X7	S	32
40,00	54,75	55,00	10,00	A	*40X55X10	S	32
40,00	54,89	55,00	13,00	A	710443	N	#
40,00	55,00	55,09	8,00	A	473677	S	47
40,00	55,00	55,09	8,00	A	*476677	S	47
40,00	55,00	55,17	9,60	A	3392⬅➡	S	47
40,00	55,00	55,20	6,50	A	40X55X6	S	35
40,00	55,00	55,20	7,00	A	*713155	V	32
40,00	55,00	55,20	8,00	A	*40X55X8V	V	32
40,00	55,00	55,28	8,00	A	40X55X8	S	35
40,00	55,00	55,28	9,00	A	224020➡	S	32
40,00	55,75	56,00	8,00	A	*40X56X8	S	32
40,00	55,75	56,00	8,00	A	*40X56X8	S	32
40,00	55,75	56,00	8,00	A	*40X56X8	S	32
40,00	56,00	56,10	8,00	A	*713118	N	47
40,00	56,00	56,20	7,00	A	40X56X7	S	32
40,00	56,00	56,20	7,00	A	*713049	V	32
40,00	56,00	56,20	7,00	A	*713158➡	S	48
40,00	56,00	56,20	7,00	A	*713159➡	S	41
40,00	56,00	56,20	8,00	A	*40X56X8V	V	35
40,00	56,00	56,20	9,00	A	710300	S	#
40,00	56,00	56,20	10,00	A	40X56X10	S	35
40,00	56,00	56,25	7,00	A	224025➡	N	32
40,00	56,00	56,26	7,00	A	*350612	V	35
40,00	56,00	56,26	8,00	A	712551	S	32
40,00	56,00	56,26	9,00	A	224026	V	35
40,00	56,00	56,80	10,00	A	*713011	N	47
40,00	56,00	56,80	10,00	A	*713012	V	32

For Illustration and Material Data See Technical Section
Designed For A Specific Application - Not Recommended For General Use ➡ Hydrodynamic Lip Design-CW ⬅ Hydrodynamic Lip Design-CCW
⬅➡ Hydrodynamic Lip Design-Bidirectional & Flanged O.D.
* The U.S. customer service number is 877-4-TIMKEN. The Canadian customer service numbers are 800-565-4927 (English) and 800-565-0438 (French-Canadian).

Shaft Size	Hsg. Bore	Seal O.D.	Seal Width	Grp.	Part No.	Lip Mat'l	Illus./ Type
40,00	56,75	57,00	7,00	A	* 40X57X7	S	32
40,00	56,90	57,15	10,00	A	* 40X57.15X10	S	32
40,00	57,00	57,20	10,00	A	40X57X10	S	32
40,00	57,00	57,20	10,00	A	710432	S	32
40,00	57,75	58,00	6,50	A	* 40X58X6.5	S	32
40,00	58,00	58,14	9,00	A	3459⬅➡	N	74
40,00	58,00	58,20	8,00	A	40X58X8	S	35
40,00	58,00	58,20	10,00	A	* 40X58X10V	V	35
40,00	58,00	58,28	10,00	A	40X58X10	S	32
40,00	58,00	58,30	10,00	A	* 713154	N	48
40,00	58,75	59,00	10,00	A	* 40X59X10	S	32
40,00	59,75	60,00	7,00	A	* 40X60X7	S	32
40,00	59,75	60,00	12,00	A	* 40X60X12	S	32
40,00	60,00	60,20	8,00	A	710147	S	#
40,00	60,00	60,20	10,00	A	224040	S	35
40,00	60,00	60,20	10,00	A	40X60X10	S	35
40,00	60,00	60,20	10,00	A	* 40X60X10V	V	35
40,00	60,00	60,20	10,00	A	* 1078	S	33
40,00	61,75	62,00	9,00	A	* 40X62X9	S	32
40,00	61,75	62,00	10,00	A	* 40X62X10	S	32
40,00	61,75	62,00	11,00	A	* 40X62X11	S	32
40,00	61,75	62,00	11,50	A	* 40X62X11.5	S	32
40,00	62,00	62,20	7,00	A	40X62X7	S	35
40,00	62,00	62,20	7,00	A	* 40X62X7V	V	32
40,00	62,00	62,20	9,00	A	710131	S	#
40,00	62,00	62,20	10,00	A	* 713021	N	25
40,00	62,00	62,25	8,00	A	40X62X8	S	32
40,00	62,00	62,25	10,00	A	* 1179	S	#
40,00	62,00	62,25	11,50	A	40X62X12	S	35
40,00	62,00	62,27	10,00	A	710196	V	32
40,00	62,00	62,27	11,00	A	224045	S	32
40,00	62,00	62,30	6,50	A	710227	S	#
40,00	62,25	62,50	11,00	A	* 40X62.5X11	S	32
40,00	62,75	63,00	7,00	A	* 40X63X7	S	32
40,00	63,00	63,30	8,00	A	224063➡	N	32
40,00	63,25	63,50	10,00	A	* 40X63.5X10	S	32
40,00	63,75	64,00	10,00	A	* 40X64X10	S	32
40,00	63,75	64,00	12,00	A	* 40X64X12	S	32
40,00	64,00	64,00	11,98	A	1216&	N	74
40,00	64,00	64,10	12,00	A	1216N&	N	74
40,00	64,00	64,10	12,00	A	710326	S	66
40,00	64,75	65,00	8,00	A	* 40X65X8	S	32
40,00	64,75	65,00	12,00	A	* 40X65X12	S	32
40,01	65,00	65,13	9,53	A	474161	S	47
40,00	65,00	65,20	20,00	A	710134	S	#
40,00	65,00	65,28	10,00	A	40X65X10	S	35
40,00	65,00	65,28	10,00	A	224100	S	35
40,00	66,00	66,30	8,00	A	224066➡	N	40
40,00	67,75	68,00	7,00	A	* 40X68X7	S	32
40,00	67,75	68,00	10,00	A	* 40X68X10	S	32
40,00	68,00	68,10	9,00	A	224068	N	40
40,00	68,00	68,25	12,00	A	40X68X12	S	35
40,00	68,00	68,80	8,00	A	40X68X8	S	35
40,00	69,75	70,00	10,00	A	* 40X70X10	S	32
40,00	69,75	70,00	12,00	A	* 40X70X12	S	32
40,00	70,00	70,20	8,00	A	40X70X8	S	32
40,00	71,75	72,00	10,00	A	* 40X72X10	S	32
40,00	71,75	72,00	12,00	A	* 40X72X12	S	32
40,00	72,00	72,35	7,00	A	40X72X7	S	35
40,00	72,00	72,35	7,00	A	350572	V	35
40,00	73,00	73,10	10,00	A	710284	N	#
40,00	73,75	74,00	10,00	A	* 40X74X10	S	32
40,00	74,00	74,12	10,00	A	474133	S	47
40,00	74,00	74,20	8,00	A	* 40X74X8	S	32
40,00	74,75	75,00	10,00	A	* 40X75X10	S	32
40,00	74,75	75,00	13,00	A	* 40X75X13	S	32
40,00	75,00	75,20	8,00	A	40X75X8	S	32
40,00	75,00	75,20	12,00	A	712011	S	32
40,00	75,00	75,26	12,00	A	2011➡	N	40
40,00	75,00	75,26	18,00	A	712020⬅	N	32
40,00	75,00	75,30	12,00	A	* 710050	S	32
40,00	75,00	75,30	12,00	A	710113	S	#
40,00	75,75	76,00	8,00	A	* 40X76X8	S	32
40,00	76,00	76,25	8,00	A	1036➡	S	40
40,00	76,00	76,28	12,50	A	1146⬅	N	32
40,00	78,00	78,20	10,00	A	40X78X10	S	35
40,00	78,00	78,80	8,00	A	40X78X8	S	32
40,00	79,72	80,00	7,00	A	* 40X80X7	S	32
40,00	79,72	80,00	12,00	A	* 40X80X12	S	32
40,00	80,00	80,20	10,00	A	* 40X80X10V	V	32
40,00	80,00	80,28	10,00	A	40X80X10	S	35
40,00	80,22	80,50	10,00	A	* 40X80.5X10	S	32
40,00	82,00	82,20	8,00	A	* 40X82X8	S	32
40,00	85,00	85,20	8,00	A	* 40X85X8	S	32
40,00	88,00	88,20	8,00	A	* 40X88X8	S	32
40,00	89,72	90,00	10,00	A	* 40X90X10	S	32
40,00	89,72	90,00	12,00	A	* 40X90X12	S	32
40,00	90,00	90,20	8,00	A	40X90X8	S	35
41,00	50,75	51,00	5,00	A	* 41X51X5	S	32
41,00	52,75	53,00	7,00	A	* 41X53X7	S	32
41,00	53,00	53,25	7,00	A	1950	S	41
41,00	53,75	54,00	7,00	A	* 41X54X7	S	32
41,00	54,00	54,23	7,00	A	224150	N	35
41,00	55,00	55,29	7,00	A	41X55X7	S	32
41,00	55,00	55,29	7,00	A	1180	S	32
41,00	55,45	55,70	9,00	A	* 41X55.7X9	S	32
41,00	56,00	56,25	7,00	A	41X56X7	S	35
41,00	56,00	56,25	7,00	A	1181	S	35
41,00	59,00	59,10	10,00	A	710114➡	N	98
41,00	61,00	61,20	10,00	A	710141⬅	N	#
41,00	62,00	62,20	8,00	A	* 41X62X8	S	32
41,00	62,00	62,23	9,00	A	710220➡	N	32
41,00	63,00	63,20	9,00	A	710291⬅	N	40
41,00	63,75	64,00	10,00	A	* 41X64X10	S	32
41,00	68,00	68,20	13,00	A	710402	S	#
41,70	54,75	55,00	7,00	A	* 41.7X55X7	S	32
41,70	54,75	55,00	10,00	A	* 41.7X55X10	S	32
42,00	49,80	50,00	6,00	A	* 42X50X6	S	32
42,00	49,80	50,00	7,00	A	* 42X50X7	S	32
42,00	51,75	52,00	4,00	A	* 42X52X4	S	32
42,00	51,75	52,00	6,00	A	* 42X52X6	S	32
42,00	51,75	52,00	7,00	A	* 42X52X7	S	32
42,00	53,75	54,00	7,00	A	* 42X54X7	S	32
42,00	54,75	55,00	9,00	A	* 42X55X9	S	32
42,00	54,89	55,00	8,00	A	1214	S	47
42,00	54,89	55,00	8,00	A	1214N	S	47
42,00	55,00	55,12	8,00	A	3051➡	H	33
42,00	55,00	55,12	8,00	A	3051N➡	H	33
42,00	55,00	55,20	7,00	A	42X55X7	S	32
42,00	55,00	55,20	7,50	A	224200	S	32

For Illustration and Material Data See Technical Section

Designed For A Specific Application - Not Recommended For General Use ➡ Hydrodynamic Lip Design-CW ⬅ Hydrodynamic Lip Design-CCW

⬅➡ Hydrodynamic Lip Design-Bidirectional & Flanged O.D.

* The U.S. customer service number is 877-4-TIMKEN. The Canadian customer service numbers are 800-565-4927 (English) and 800-565-0438 (French-Canadian).

Metric List Sizes & Type

Shaft Size	Hsg. Bore	Seal O.D.	Seal Width	Grp.	Part No.	Lip Mat'l	Illus./ Type
42,00	55,00	55,20	8,00	A	∗42X55X8V	V	35
42,00	55,00	55,28	8,00	A	224210	S	35
42,00	55,00	55,28	8,00	A	42X55X8	S	35
42,00	55,00	55,33	9,00	A	224205➡	N	32
42,00	55,75	56,00	6,00	A	∗42X56X6	S	32
42,00	55,75	56,00	10,00	A	∗42X56X10	S	32
42,00	56,00	56,10	14,00	A	710221	N	#
42,00	56,00	56,13	7,00	A	42X56X7	S	32
42,00	56,00	56,13	7,00	A	∗1944➡	H	32
42,00	56,00	56,16	7,00	A	473560N➡	N	47
42,00	56,00	56,21	6,00	A	710097	S	#
42,00	56,00	56,20	7,00	A	∗42X56X7V	V	35
42,00	56,00	56,21	7,00	A	224220	S	49
42,00	56,00	56,20	7,00	A	710386➡	H	32
42,00	56,00	56,28	7,00	A	494117	S	49
42,00	56,00	56,30	7,00	A	∗713050	V	32
42,00	56,00	56,34	7,00	A	3774➡	H	35
42,00	56,00	56,80	7,00	A	∗713013	S	25
42,00	56,30	56,44	8,00	A	710186	S	#
42,00	56,50	56,70	8,00	A	710244	S	#
42,00	57,15	57,35	10,00	A	∗713014	S	48
42,00	57,75	58,00	8,00	A	∗42X58X8	S	32
42,00	57,75	58,00	10,00	A	∗42X58X10	S	32
42,00	58,00	58,10	7,00	A	42X58X7	S	48
42,00	58,00	58,10	10,00	A	∗2000	S	33
42,00	58,00	58,17	7,00	A	474241V➡	V	47
42,00	58,00	58,18	7,00	A	224235	S	48
42,00	58,00	58,28	8,00	A	224215⬅	N	32
42,00	59,00	59,10	7,00	A	710442➡	N	48
42,00	59,75	60,00	8,00	A	∗42X60X8	S	32
42,00	59,75	60,00	9,00	A	∗42X60X9	S	32
42,00	59,75	60,00	10,00	A	∗42X60X10	S	32
42,00	59,75	60,00	12,00	A	∗42X60X12	S	32
42,00	60,00	60,20	10,00	A	∗42X60X10V	V	35
42,00	60,00	60,22	7,00	A	42X60X7	S	32
42,00	60,00	60,22	7,00	A	∗320563	V	32
42,00	60,00	60,22	7,00	A	∗323715	S	32
42,00	60,00	60,22	7,04	A	1953	N	32
42,00	60,00	60,42	7,00	A	2025	V	32
42,00	61,75	62,00	7,00	A	∗42X62X7	S	32
42,00	61,75	62,00	10,00	A	∗42X62X10	S	32
42,00	61,75	62,00	12,00	A	∗42X62X12	S	32
42,00	62,00	62,30	8,00	A	∗713119	N	47
42,00	62,00	62,10	12,00	A	710403	S	#
42,00	62,00	62,20	7,00	A	710301	S	97
42,00	62,00	62,20	8,00	A	∗42X62X8V	V	32
42,00	62,00	62,20	8,00	A	710408	N	32
42,00	62,00	62,27	8,00	A	224250	S	35
42,00	62,00	62,27	8,00	A	42X62X8	S	35
42,00	62,00	62,27	10,00	A	∗1946	S	35
42,00	62,00	62,27	10,00	A	224252	S	32
42,00	62,75	63,00	7,00	A	∗42X63X7	S	32
42,00	63,00	63,20	9,00	A	710298➡	N	40
42,00	63,00	63,30	7,00	A	∗713051	N	48
42,00	63,75	64,00	8,00	A	∗42X64X8	S	32
42,00	64,00	64,18	6,00	A	224254	S	34
42,00	64,75	65,00	7,50	A	∗42X65X7.5	S	32
42,00	64,75	65,00	9,00	A	∗42X65X9	S	32
42,00	64,75	65,00	12,00	A	∗42X65X12	S	32
42,00	64,80	65,00	13,50	A	710179➡	S	32
42,00	65,00	65,15	10,00	A	42X65X10	N	47
42,00	65,00	65,15	10,00	A	224255	N	47
42,00	65,00	65,20	10,00	A	∗42X65X10V	V	35
42,00	65,00	65,30	12,00	A	∗713081	N	32
42,00	65,05	65,15	9,50	A	∗474135N	N	47
42,00	66,00	66,28	10,00	A	224266	S	32
42,00	67,00	67,13	7,16	A	4615V➡	V	83
42,00	67,00	67,20	10,00	A	710286⬅➡	N	32
42,00	68,00	68,20	8,00	A	42X68X8	S	32
42,00	68,00	68,20	10,00	A	42X68X10	S	32
42,00	69,75	70,00	8,00	A	∗42X70X8	S	32
42,00	69,75	70,00	12,00	A	∗42X70X12	S	32
42,00	70,00	70,20	10,00	A	42X70X10	S	32
42,00	72,00	72,20	8,00	A	**42X72X8**	S	32
42,00	72,00	72,20	10,00	A	∗42X72X10V	V	35
42,00	72,00	72,27	10,00	A	42X72X10	S	32
42,00	72,00	72,27	10,00	A	224270	S	35
42,00	72,00	72,28	10,00	A	710207	S	40
42,00	74,00	74,30	10,00	A	∗713120	S	#
42,00	74,75	75,00	10,00	A	∗42X75X10	S	32
42,00	74,75	75,00	12,00	A	∗42X75X12	S	32
42,00	75,00	75,20	8,00	A	∗42X75X8	S	32
42,00	75,75	76,00	12,00	A	∗42X76X12	S	32
42,00	76,00	76,10	14,00	A	710245➡	N	#
42,00	76,00	76,28	12,00	A	710195	S	40
42,00	77,72	78,00	10,00	A	∗42X78X10	S	32
42,00	78,00	78,20	8,00	A	∗42X78X8	S	32
42,00	80,00	80,20	8,00	A	42X80X8	S	32
42,00	80,00	80,20	10,00	A	42X80X10	S	35
42,00	90,00	90,09	9,00	A	710133	N	#
42,00	90,00	90,28	12,00	A	710246	N	#
42,90	61,75	62,00	8,00	A	∗42.9X62X8	S	32
43,00	49,80	50,00	7,00	A	∗43X50X7	S	32
43,00	54,00	54,10	6,50	A	224400	S	25
43,00	54,00	54,10	7,50	A	334111	S	33
43,00	54,75	55,00	9,00	A	∗43X55X9	S	32
43,00	55,00	55,20	6,00	A	2012➡	V	32
43,00	55,00	55,20	6,00	A	2012V➡	V	32
43,00	55,00	55,20	8,00	A	710264➡	H	32
43,00	55,00	55,20	8,00	A	43X55X8	S	32
43,00	55,00	55,25	8,00	A	1183	S	34
43,00	57,00	57,20	8,00	A	∗43X57X8	S	32
43,00	57,75	58,00	8,00	A	∗43X58X8	S	32
43,00	58,47	58,62	7,50	A	710159	S	#
43,00	60,00	60,30	8,00	A	320583➡	S	32
43,00	61,75	62,00	8,00	A	∗43X62X8	S	32
43,00	61,75	62,00	12,00	A	∗43X62X12	S	32
43,00	62,00	62,10	9,50	A	224320	S	47
43,00	62,00	62,10	9,50	A	∗474137	S	47
43,00	65,00	65,20	8,00	A	43X65X8	S	32
43,00	65,04	65,14	9,50	A	710387	S	47
43,00	65,75	66,00	10,00	A	∗43X66X10	S	32
43,00	69,00	69,20	8,00	A	∗43X69X8	S	32
43,00	70,00	70,20	9,00	A	710142	S	#
43,00	73,00	73,20	8,00	A	∗43X73X8	S	32
43,50	61,75	62,00	6,50	A	∗43.5X62X6.5	S	32
44,00	53,75	54,00	7,00	A	∗44X54X7	S	32
44,00	58,00	58,20	8,00	A	∗44X58X8	S	32
44,00	59,00	59,23	6,80	A	224450➡	N	35
44,00	59,75	60,00	9,00	A	∗44X60X9	S	32
44,00	60,00	60,20	7,00	A	44X60X7	S	32
44,00	60,00	60,20	10,00	A	44X60X10	S	35
44,00	60,00	60,28	10,00	A	224460➡	H	35

For Illustration and Material Data See Technical Section
Designed For A Specific Application - Not Recommended For General Use ➡ Hydrodynamic Lip Design-CW ⬅ Hydrodynamic Lip Design-CCW
⬅➡ Hydrodynamic Lip Design-Bidirectional
∗ The U.S. customer service number is 877-4-TIMKEN. The Canadian customer service numbers are 800-565-4927 (English) and 800-565-0438 (French-Canadian).

Shaft Size	Hsg. Bore	Seal O.D.	Seal Width	Grp.	Part No.	Lip Mat'l	Illus./ Type
44,00	61,75	62,00	7,00	A	* 44X62X7	S	32
44,00	61,75	62,00	10,00	A	* 44X62X10	S	32
44,00	62,00	62,26	8,00	A	44X62X8 ⬅➡	S	32
44,00	62,00	62,26	8,00	A	224462 ⬅➡	S	32
44,00	62,00	62,28	10,00	A	224464 ⬅	N	32
44,00	64,75	65,00	11,00	A	* 44X65X11	S	32
44,00	65,00	65,20	11,00	A	224465 ➡	S	32
44,00	65,00	65,28	10,00	A	44X65X10	S	35
44,00	66,00	66,10	6,00	A	710223	S	#
44,00	68,00	68,30	8,00	A	350609 ⬅	N	35
44,00	69,75	70,00	12,00	A	* 44X70X12	S	32
44,00	70,00	70,20	8,00	A	44X70X8	S	32
44,00	72,00	72,11	10,00	A	44X72X10	S	35
44,00	72,00	72,11	10,00	A	224470	S	35
44,00	80,00	80,12	8,00	A	710115 ⬅➡	S	98
44,00	90,00	90,10	9,00	A	710283	N	#
44,00	92,00	92,28	12,50	A	710208	S	#
44,50	61,75	62,00	10,00	A	* 44.5X62X10	S	32
45,00	53,75	54,00	4,50	A	* 45X54X4.5	S	32
45,00	54,75	55,00	5,00	A	* 45X55X5	S	32
45,00	54,75	55,00	7,00	A	* 45X55X7	S	32
45,00	54,75	55,00	8,00	A	* 45X55X8	S	32
45,00	54,75	55,00	10,00	A	* 45X55X10	S	32
45,00	55,75	56,00	6,00	A	* 45X56X6	S	32
45,00	55,75	56,00	8,00	A	* 45X56X8	S	32
45,00	56,75	57,00	5,50	A	* 45X57X5.5	S	32
45,00	56,75	57,00	9,00	A	* 45X57X9	S	32
45,00	57,75	58,00	8,00	A	* 45X58X8	S	32
45,00	57,75	58,00	10,00	A	* 45X58X10	S	32
45,00	58,00	58,28	7,00	A	45X58X7	S	35
45,00	58,00	58,30	7,00	A	224510	S	32
45,00	58,75	59,00	7,00	A	* 45X59X7	S	32
45,00	58,75	59,00	10,00	A	* 45X59X10	S	32
45,00	59,00	59,28	7,50	A	710193	S	32
45,00	59,75	60,00	9,00	A	* 45X60X9	S	32
45,00	59,75	60,00	12,00	A	* 45X60X12	S	32
45,00	60,00	60,20	7,00	A	45X60X7	S	35
45,00	60,00	60,20	8,00	A	45X60X8	S	35
45,00	60,00	60,20	8,00	A	* 45X60X8V	V	35
45,00	60,00	60,25	10,00	A	45X60X10	S	35
45,00	60,00	60,25	10,00	A	* 1184	N	35
45,00	60,00	60,25	10,00	A	224520	S	35
45,00	60,00	60,25	10,80	A	2440 ➡	N	69
45,00	61,00	61,16	9,00	A	* 484236V	V	48
45,00	61,75	62,00	7,00	A	* 45X62X7	S	32
45,00	61,75	62,00	9,00	A	* 45X62X9	S	32
45,00	61,75	62,00	10,00	A	* 45X62X10	S	32
45,00	61,75	62,00	12,00	A	* 45X62X12	S	32
45,00	61,90	62,00	10,00	A	* 323871	S	32
45,00	62,00	62,10	6,00	A	494122	S	49
45,00	62,00	62,10	9,00	A	710321	S	47
45,00	62,00	62,10	10,16	A	* 1997	S	#
45,00	62,00	62,15	8,00	A	710078	V	47
45,00	62,00	62,20	8,00	A	* 45X62X8V	V	35
45,00	62,00	62,30	8,00	A	45X62X8	S	35
45,00	62,00	62,30	8,00	A	1012	S	35
45,00	62,00	62,30	8,00	A	1012N	S	32
45,00	62,00	62,30	8,00	A	* 713053	V	32
45,00	62,00	62,30	8,00	A	* 713054	V	32
45,00	62,00	62,30	10,00	A	* 1185	S	32
45,00	62,00	62,30	10,00	A	* 713052	V	48
45,00	62,00	62,30	12,00	A	* 2013	S	32
45,00	62,00	66,00	10,00	A	* 713056	N	48
45,00	62,75	63,00	7,00	A	* 45X63X7	S	32
45,00	63,25	63,50	10,00	A	* 45X63.5X10	S	32
45,00	63,75	64,00	7,00	A	* 45X64X7	S	32
45,00	63,75	64,00	10,00	A	* 45X64X10	S	32
45,00	64,00	64,11	11,86	A	1951&	S	87
45,00	64,00	64,11	16,40	A	* 3966	S	#
45,00	64,00	64,26	13,00	A	1939	S	#
45,00	64,00	64,25	19,00	A	1938	S	#
45,00	64,00	64,30	12,00	A	* 713121	S	47
45,00	64,75	65,00	7,00	A	* 45X65X7	S	32
45,00	64,75	65,00	9,00	A	* 45X65X9	S	32
45,00	64,75	65,00	10,00	A	* 45X65X10	S	32
45,00	64,75	65,00	12,00	A	* 45X65X12	S	32
45,00	65,00	65,10	5,00	A	1992	S	47
45,00	65,00	65,10	5,00	A	* 3985	S	#
45,00	65,00	65,20	8,00	A	* 45X65X8V	V	35
45,00	65,00	65,28	8,00	A	45X65X8	S	35
45,00	65,00	65,28	8,00	A	224550	S	35
45,00	65,00	65,30	10,00	A	* 713122	N	48
45,00	65,00	65,30	10,00	A	* 713153	V	32
45,00	65,75	66,00	10,00	A	* 45X66X10	S	32
45,00	66,00	66,24	7,50	A	710160	S	#
45,00	66,00	66,30	10,00	A	* 713055	N	48
45,00	67,00	67,20	8,00	A	710289 ➡	S	32
45,00	67,75	68,00	8,00	A	* 45X68X8	S	32
45,00	67,75	68,00	9,00	A	* 45X68X9	S	32
45,00	67,75	68,00	10,00	A	* 45X68X10	S	32
45,00	67,75	68,00	12,00	A	* 45X68X12	S	32
45,00	68,00	68,20	10,00	A	* 45X68X10V	V	35
45,00	68,00	68,20	12,00	A	710345 ➡	S	32
45,00	68,00	68,28	7,00	A	45X68X7	S	32
45,00	68,00	68,28	7,00	A	224560	S	32
45,00	68,00	68,28	7,00	A	320564	V	32
45,00	68,05	68,30	7,00	A	* 45X68.3X7	S	32
45,00	69,75	70,00	12,00	A	* 45X70X12	S	32
45,00	70,00	70,18	10,00	A	45X70X10	S	32
45,00	71,75	72,00	8,00	A	* 45X72X8	S	32
45,00	72,00	72,20	8,00	A	* 45X72X8V	V	32
45,00	72,00	72,20	10,00	A	45X72X10	S	35
45,00	72,00	72,20	12,00	A	710270	N	32
45,00	72,00	72,25	10,00	A	45X72X95	S	32
45,00	72,00	72,28	7,00	A	45X72X7	S	35
45,00	72,00	72,28	12,00	A	45X72X12	S	35
45,00	72,00	72,28	12,00	A	224570	S	35
45,00	72,20	72,34	7,50	A	1943	S	44
45,00	72,20	72,34	7,50	A	* 444118	S	44
45,00	74,25	74,50	12,00	A	* 45X74.5X12	S	32
45,00	74,75	75,00	8,00	A	* 45X75X8	S	32
45,00	74,75	75,00	10,00	A	* 45X75X10	S	32
45,00	74,75	75,00	12,00	A	* 45X75X12	S	32
45,00	75,00	75,10	12,00	A	1979 ➡	N	47
45,00	75,00	75,20	7,00	A	45X75X7	S	32
45,00	75,00	75,20	10,00	A	* 45X75X10V	V	32
45,00	75,00	75,30	12,00	A	* 713123	V	32
45,00	77,72	78,00	12,00	A	* 45X78X12	S	32
45,00	78,00	78,10	11,00	A	710248 ➡	N	66
45,00	79,72	80,00	12,00	A	* 45X80X12	S	32
45,00	80,00	80,28	10,00	A	45X80X10	S	35
45,00	81,72	82,00	12,00	A	* 45X82X12	S	32
45,00	82,00	82,20	8,00	A	* 45X82X8	S	32
45,00	84,72	85,00	12,00	A	* 45X85X12	S	32

For Illustration and Material Data See Technical Section

Designed For A Specific Application - Not Recommended For General Use ➡ Hydrodynamic Lip Design-CW ⬅ Hydrodynamic Lip Design-CCW

⬅➡ Hydrodynamic Lip Design-Bidirectional & Flanged O.D.

* The U.S. customer service number is 877-4-TIMKEN. The Canadian customer service numbers are 800-565-4927 (English) and 800-565-0438 (French-Canadian).

Shaft Size	Hsg. Bore	Seal O.D.	Seal Width	Grp.	Part No.	Lip Mat'l	Illus./ Type
45,00	85,00	85,20	10,00	A	45X85X10	S	35
45,00	85,00	85,25	13,00	A	45X85X13	S	45
45,00	89,72	90,00	10,00	A	∗45X90X10	S	32
45,00	98,00	98,10	10,50	A	710364	N	#
45,00	99,72	100,00	10,00	A	∗45X100X10	S	32
46,00	53,75	54,00	9,00	A	∗46X54X9	S	32
46,00	57,75	58,00	7,00	A	∗46X58X7	S	32
46,00	58,00	58,28	7,00	A	224650➡	N	32
46,00	58,85	59,10	12,00	A	∗46X59.1X12	S	32
46,00	59,00	59,20	8,00	A	∗46X59X8	S	32
46,00	59,75	60,00	7,00	A	∗46X60X7	S	32
46,00	59,75	60,00	10,00	A	∗46X60X10	S	32
46,00	60,00	60,20	8,00	A	∗46X60X8	S	32
46,00	60,00	60,28	7,00	A	224660➡	H	32
46,00	62,00	62,10	8,00	A	224662	S	35
46,00	62,00	62,20	8,00	A	∗46X62X8	S	32
46,00	62,00	62,20	20,50	A	710394	S	#
46,00	63,00	63,40	7,70	A	224663➡	N	35
46,00	65,00	65,20	7,00	A	46X65X7	S	32
46,00	68,00	68,20	8,00	A	∗46X68X8	S	32
46,00	68,50	68,70	7,50	A	710161	S	#
46,00	69,40	69,60	10,00	A	710128	S	#
46,00	69,40	69,60	11,00	A	710126	S	#
46,00	70,00	70,10	8,00	A	710238➡	S	32
46,00	70,00	70,20	8,00	A	46X70X8	S	32
45,00	61,00	61,20	8,00	A	710260⬅	S	32
46,00	72,00	72,20	8,00	A	∗46X72X8	S	32
46,00	73,00	73,20	8,00	A	∗46X73X8	S	32
46,00	94,50	94,70	8,00	A	710377	S	#
46,50	90,00	90,20	12,00	A	710397	N	#
47,00	56,75	57,00	7,00	A	∗47X57X7	S	32
47,00	59,75	60,00	7,00	A	∗47X60X7	S	32
47,00	60,00	60,20	8,00	A	∗47X60X8	S	32
47,00	61,75	62,00	6,00	A	∗47X62X6	S	32
47,00	62,00	62,10	9,00	A	710320	S	48
47,00	62,00	62,20	8,00	A	47X62X8	S	32
47,00	64,00	64,08	7,00	A	710191	S	25
47,00	64,00	64,28	14,00	A	1937	S	#
47,00	64,75	65,00	10,00	A	∗47X65X10	S	32
47,00	65,00	65,20	8,00	A	47X65X8	S	32
47,00	66,00	66,10	11,00	A	710215	S	66
47,00	68,00	68,27	10,00	A	47X68X10	S	32
47,00	68,00	68,27	10,00	A	1187	S	32
47,00	69,00	69,14	10,10	A	3606⬅➡	N	7S
47,00	70,00	70,20	10,00	A	47X70X10	S	32
47,00	72,00	72,23	8,00	A	224772	S	48
47,00	72,20	72,40	6,00	A	710337	S	34
47,00	80,00	80,20	12,70	A	710150	S	#
47,00	84,00	84,20	11,00	A	710143	S	#
47,60	68,00	68,30	14,00	A	712516➡	N	#
48,00	57,75	58,00	4,00	A	∗48X58X4	S	32
48,00	58,00	58,20	8,00	A	∗48X58X8	S	32
48,00	58,75	59,00	6,00	A	∗48X59X6	S	32
48,00	59,75	60,00	8,00	A	∗48X60X8	S	32
48,00	59,75	60,00	10,00	A	∗48X60X10	S	32
48,00	60,00	60,20	9,00	A	710356➡	S	47
48,00	61,75	62,00	7,00	A	∗48X62X7	S	32
48,00	61,75	62,00	9,00	A	∗48X62X9	S	32
48,00	61,75	62,00	10,00	A	∗48X62X10	S	32
48,00	61,75	62,00	12,00	A	∗48X62X12	S	32
48,00	62,00	62,10	8,00	A	48X62X8	S	35
48,00	62,00	62,10	8,00	A	224820	S	32
48,00	62,00	62,10	24,00	A	1956	S	#
48,00	62,00	62,20	6,00	A	710322	S	34
48,00	62,00	62,20	8,00	A	∗48X62X8V	V	35
48,00	62,00	62,20	8,00	A	∗320832	S	32
48,00	62,00	62,25	6,00	A	1188	S	34
48,00	62,00	62,28	8,00	A	224810	N	32
48,00	63,00	63,09	9,00	A	48X63X9	S	47
48,00	63,00	63,09	9,00	A	1969	S	47
48,00	64,00	64,20	14,00	A	710167	S	#
48,00	64,75	65,00	7,00	A	∗48X65X7	S	32
48,00	64,75	65,00	9,00	A	∗48X65X9	S	32
48,00	64,75	65,00	12,00	A	∗48X65X12	S	32
48,00	65,00	65,10	7,00	A	∗493759	S	49
48,00	65,00	65,15	24,50	A	4528N⬅	N	66
48,00	65,00	65,20	10,00	A	∗48X65X10V	V	32
48,00	65,00	65,20	10,00	A	224865	S	32
48,00	65,00	65,30	8,00	A	1973	S	25
48,00	65,00	65,30	10,00	A	48X65X10	S	32
48,00	65,00	65,30	10,00	A	∗713152	S	48
48,00	65,00	65,30	10,00	A	716484	V	32
48,00	65,00	65,80	10,00	A	∗713015	V	32
48,01	65,07	65,20	12,70	A	∗2820	S	#
48,00	66,75	67,00	11,00	A	∗48X67X11	S	32
48,00	67,75	68,00	8,00	A	∗48X68X8	S	32
48,00	68,00	68,27	10,00	A	48X68X10	N	32
48,00	68,00	68,27	10,00	A	224835	N	32
48,00	68,00	68,30	11,00	A	224840➡	S	32
48,01	68,58	68,68	14,78	A	9449⬅	S	74
48,00	69,75	70,00	7,00	A	∗48X70X7	S	32
48,00	69,75	70,00	10,00	A	∗48X70X10	S	32
48,00	69,75	70,00	12,00	A	∗48X70X12	S	32
48,00	70,00	70,20	8,00	A	48X70X8	S	35
48,00	70,00	70,20	9,00	A	710255	S	#
48,00	70,00	70,20	12,00	A	710313➡	S	32
48,00	70,00	70,25	9,00	A	712010➡	H	32
48,00	70,00	70,28	9,00	A	48X70X9	S	35
48,00	70,00	70,28	10,00	A	1994	S	32
48,00	70,25	70,50	10,00	A	∗48X70.5X10	S	32
48,00	71,75	72,00	8,00	A	∗48X72X8	S	32
48,00	71,75	72,00	9,00	A	∗48X72X9	S	32
48,00	71,75	72,00	10,00	A	∗48X72X10	S	32
48,00	71,75	72,00	12,00	A	∗48X72X12	S	32
48,00	72,00	72,20	8,00	A	∗48X72X8V	V	35
48,00	72,00	72,28	10,00	A	224850	S	35
48,00	72,00	72,31	7,00	A	48X72X7	S	32
48,00	72,00	72,31	7,00	A	1208	S	32
48,00	72,00	72,35	8,50	A	224872	S	32
48,00	72,25	72,50	10,00	A	∗48X72.5X10	S	32
48,00	73,00	73,10	7,00	A	224870	S	47
48,00	73,75	74,00	10,00	A	∗48X74X10	S	32
48,00	73,75	74,00	12,00	A	∗48X74X12	S	32
48,00	74,00	74,23	10,00	A	224874	S	32
48,00	74,00	74,30	10,00	A	224815	N	40
48,00	74,75	75,00	12,00	A	∗48X75X12	S	32
48,00	75,00	75,20	10,00	A	48X75X10	S	32
48,00	78,00	78,20	8,00	A	∗48X78X8	S	32
48,00	79,72	80,00	10,00	A	∗48X80X10	S	32

For Illustration and Material Data See Technical Section

Designed For A Specific Application - Not Recommended For General Use ➡ Hydrodynamic Lip Design-CW ⬅ Hydrodynamic Lip Design-CCW

⬅➡ Hydrodynamic Lip Design-Bidirectional

∗ The U.S. customer service number is 877-4-TIMKEN. The Canadian customer service numbers are 800-565-4927 (English) and 800-565-0438 (French-Canadian).

Shaft Size	Hsg. Bore	Seal O.D.	Seal Width	Grp.	Part No.	Lip Mat'l	Illus./ Type
48,00	80,00	80,20	8,00	A	48X80X8	S	32
48,00	81,72	82,00	10,00	A	* 48X82X10	S	32
48,00	82,00	82,20	8,00	A	* 48X82X8	S	32
48,00	84,72	85,00	10,00	A	* 48X85X10	S	32
48,00	85,00	85,20	8,00	A	* 48X85X8	S	32
48,00	88,00	88,20	8,00	A	* 48X88X8	S	32
48,00	89,72	90,00	13,00	A	* 48X90X13	S	32
48,00	90,00	90,20	10,00	A	48X90X10	S	35
48,00	108,50	108,70	13,00	A	710296	S	#
49,00	61,75	62,00	6,00	A	* 49X62X6	S	32
49,00	62,00	62,15	8,00	A	4904	S	66
49,00	64,00	64,28	12,50	A	1936	S	#
49,00	65,10	65,20	8,00	A	39877⬅➡	T	WW
49,00	70,00	70,10	12,50	A	710305&	S	#
49,00	72,20	72,50	8,00	A	710148	S	97
49,00	75,75	76,00	15,00	A	* 49X76X15	S	32
49,00	79,00	79,10	17,50	A	224979➡	N	47
49,00	100,00	100,20	8,00	A	710374	S	#
50,00	59,75	60,00	8,00	A	* 50X60X8	S	32
50,00	59,75	60,00	10,00	A	* 50X60X10	S	32
50,00	60,00	60,25	6,00	A	710192	S	32
50,00	61,75	62,00	9,00	A	* 50X62X9	S	32
50,00	61,75	62,00	10,00	A	* 50X62X10	S	32
50,00	62,00	62,08	6,00	A	* 331356	S	33
50,00	62,00	62,10	9,00	A	225008	S	47
50,00	62,00	62,28	7,00	A	50X62X7	S	35
50,00	62,00	62,28	7,00	A	225005	S	32
50,00	62,75	63,00	8,00	A	* 50X63X8	S	32
50,00	63,75	64,00	8,00	A	* 50X64X8	S	32
50,00	63,75	64,00	9,00	A	* 50X64X9	S	32
50,00	63,75	64,00	10,00	A	* 50X64X10	S	32
50,00	64,00	64,10	6,50	A	1971	S	47
50,00	64,10	64,19	6,50	A	710098	S	71
50,00	64,75	65,00	9,00	A	* 50X65X9	S	32
50,00	64,75	65,00	10,00	A	* 50X65X10	S	32
50,00	65,00	65,10	14,00	A	3743	S	66
50,00	65,00	65,28	8,00	A	225010	S	47
50,00	65,00	65,15	8,00	A	* 470856	S	47
50,00	65,00	65,20	8,00	A	* 50X65X8V	V	32
50,00	65,00	65,20	8,00	A	710354➡	N	32
50,00	65,00	65,28	8,00	A	50X65X8	S	32
50,00	65,00	65,33	8,50	A	1209	S	35
50,00	65,30	65,53	8,00	A	710226	S	32
50,00	65,75	66,00	6,00	A	* 50X66X6	S	32
50,00	66,00	66,22	8,00	A	* 473810V	V	47
50,00	66,50	66,62	9,52	A	474134	S	47
50,00	66,75	67,00	9,00	A	* 50X67X9	S	32
50,00	66,75	67,00	10,00	A	* 50X67X10	S	32
50,00	67,00	67,20	9,00	A	710357	S	47
50,00	67,00	67,27	11,00	A	1974	S	97
50,00	67,75	68,00	7,00	A	* 50X68X7	S	32
50,00	67,75	68,00	9,00	A	* 50X68X9	S	32
50,00	67,75	68,00	10,00	A	* 50X68X10	S	32
50,00	68,00	68,15	8,00	A	* 483738V	V	48
50,00	68,00	68,20	8,00	A	* 50X68X8V	V	32
50,00	68,00	68,20	9,00	A	710420➡	S	32
50,00	68,00	68,27	7,00	A	710194	S	32
50,00	68,00	68,28	8,00	A	50X68X8	S	35
50,00	68,00	68,28	8,00	A	1948	S	35
50,00	68,00	68,28	8,00	A	* 353676	S	35
50,00	68,00	68,28	9,00	A	225020➡	V	32
50,00	69,75	70,00	10,00	A	* 50X70X10	S	32
50,00	69,75	70,00	12,00	A	* 50X70X12	S	32
50,00	69,75	70,00	13,00	A	* 50X70X13	S	32
50,00	70,00	70,10	7,00	A	413818	S	41
50,00	70,00	70,10	9,00	A	* 470824	S	47
50,00	70,00	70,10	11,00	A	* 481371H	H	48
50,00	70,00	70,20	8,00	A	50X70X8	S	32
50,00	70,00	70,20	9,00	A	50X70X9	S	32
50,00	70,00	70,20	10,00	A	* 50X70X10V	V	35
50,00	70,00	70,20	10,00	A	710173	N	#
50,00	70,00	70,20	14,00	A	710135	S	#
50,00	70,00	70,23	9,00	A	1960	S	47
50,00	70,00	70,30	9,50	A	* 1189	S	32
50,00	70,00	70,30	10,00	A	* 713057	V	32
50,00	71,75	72,00	7,00	A	* 50X72X7	S	32
50,00	71,75	72,00	9,00	A	* 50X72X9	S	32
50,00	71,75	72,00	10,00	A	* 50X72X10	S	32
50,00	71,75	72,00	12,00	A	* 50X72X12	S	32
50,00	72,00	72,20	8,00	A	* 50X72X8V	V	32
50,00	72,00	72,20	10,00	A	710398	S	#
50,00	72,00	72,28	8,00	A	225030	S	35
50,00	72,00	72,28	8,00	A	50X72X8	S	35
50,00	72,00	72,35	10,00	A	225035	S	32
50,00	72,00	72,35	12,00	A	225040➡	S	32
50,00	72,75	73,00	9,00	A	* 50X73X9	S	32
50,00	74,00	74,20	9,00	A	710137	S	#
50,00	74,75	75,00	10,00	A	* 50X75X10	S	32
50,00	75,00	75,10	9,00	A	710437	S	47
50,00	75,00	75,20	7,00	A	**50X75X7**	S	32
50,00	75,00	75,20	8,00	A	* 50X75X8	S	32
50,00	75,00	75,28	12,00	A	50X75X12	S	32
50,00	75,75	76,00	12,00	A	* 50X76X12	S	32
50,00	77,50	77,70	9,00	A	1941	S	47
50,00	77,72	78,00	12,00	A	* 50X78X12	S	32
50,00	78,00	78,20	8,00	A	* 50X78X8	S	32
50,00	79,72	80,00	10,00	A	* 50X80X10	S	32
50,00	79,72	80,00	12,00	A	* 50X80X12	S	32
50,00	79,72	80,00	13,00	A	* 50X80X13	S	32
50,00	80,00	80,20	8,00	A	* 50X80X8V	V	32
50,00	80,00	80,28	8,00	A	225050	S	35
50,00	80,00	80,28	8,00	A	50X80X8	S	35
50,00	80,00	80,30	10,00	A	* 713082	N	47
50,00	80,00	80,30	16,00	A	710112⬅➡	N	#
50,00	80,72	81,00	12,00	A	* 50X81X12	S	32
50,00	81,00	81,30	13,00	A	* 713124	N	47
50,00	81,72	82,00	12,00	A	* 50X82X12	S	32
50,00	82,00	82,18	11,50	A	225082	S	#
50,00	84,72	85,00	10,00	A	* 50X85X10	S	32
50,00	84,72	85,00	12,00	A	* 50X85X12	S	32
50,00	85,00	85,20	8,00	A	50X85X8	S	32
50,00	86,00	86,30	13,00	A	710117	N	#
50,00	88,00	88,20	8,00	A	* 50X88X8	S	32
50,00	89,72	90,00	13,00	A	* 50X90X13	S	32
50,00	90,00	90,20	8,00	A	**50X90X8**	S	32
50,00	90,00	90,20	10,00	A	* 50X90X10V	V	35
50,00	90,00	90,28	10,00	A	50X90X10	S	35

For Illustration and Material Data See Technical Section

Designed For A Specific Application - Not Recommended For General Use ➡ Hydrodynamic Lip Design-CW ⬅➡ Hydrodynamic Lip Design-Bidirectional & Flanged O.D.

* The U.S. customer service number is 877-4-TIMKEN. The Canadian customer service numbers are 800-565-4927 (English) and 800-565-0438 (French-Canadian).

Shaft Size	Hsg. Bore	Seal O.D.	Seal Width	Grp.	Part No.	Lip Mat'l	Illus./ Type
50,00	94,00	94,28	24,00	A	710071	S	#
50,00	99,72	100,00	10,00	A	*50X100X10	S	32
50,00	110,00	110,13	9,50	A	476512	S	47
51,00	62,00	62,10	7,00	A	710407	S	33
51,00	63,00	63,12	6,00	A	494123	S	49
51,00	63,00	63,20	8,00	A	*51X63X8	S	32
51,00	63,00	63,20	8,50	A	710323	S	49
51,00	64,75	65,00	13,00	A	*51X65X13	S	32
51,00	65,00	65,10	7,00	A	51X65X7	S	47
51,00	65,00	65,10	7,00	A	225110	S	47
51,00	65,00	65,10	7,00	A	*474096	S	47
51,00	66,00	66,20	6,50	A	710265	N	35
51,00	66,25	66,50	10,00	A	*51X66.5X10	S	32
51,00	70,00	70,28	11,00	A	8316➡	N	32
51,00	73,00	73,20	8,00	A	*51X73X8	S	32
51,00	80,00	80,20	8,00	A	*51X80X8	S	32
51,00	81,00	81,20	8,00	A	*51X81X8	S	32
51,00	90,00	90,20	8,00	A	*51X90X8	S	32
51,00	92,00	92,20	8,00	A	*51X92X8	S	32
52,00	61,75	62,00	7,00	A	*52X62X7	S	32
52,00	61,75	62,00	10,00	A	*52X62X10	S	32
52,00	62,00	63,00	5,50	A	710253%	S	#
52,00	62,75	63,00	8,00	A	*52X63X8	S	32
52,00	63,00	63,23	8,00	A	1975	S	32
52,00	63,75	64,00	9,00	A	*52X64X9	S	32
52,00	64,75	65,00	8,00	A	*52X65X8	S	32
52,00	64,75	65,00	10,00	A	*52X65X10	S	32
52,00	65,00	65,20	9,00	A	225208	S	32
52,00	65,00	65,30	9,00	A	52X65X9	S	35
52,00	65,00	65,30	9,00	A	1955	S	35
52,00	66,00	66,12	7,50	A	4898	S	66
52,00	66,00	66,23	9,00	A	225210	N	35
52,00	67,00	67,30	7,00	A	1883%	S	#
52,00	67,75	68,00	7,00	A	*52X68X7	S	32
52,00	67,75	68,00	10,00	A	*52X68X10	S	32
52,00	68,00	68,10	6,50	A	710292	S	#
52,00	68,00	68,09	12,09	A	*710064	S	#
52,00	68,00	68,15	8,00	A	710190	V	48
52,00	68,00	68,20	8,00	A	*52X68X8V	V	35
52,00	68,00	68,20	13,00	A	710312	S	32
52,00	68,00	68,28	7,00	A	4990	S	281
52,00	68,00	68,28	8,00	A	225220	S	35
52,00	68,00	68,28	8,00	A	52X68X8	S	35
52,00	68,00	68,28	10,00	A	1884	S	32
52,00	68,00	68,30	13,50	A	*713058	S	47
52,00	68,00	68,43	10,00	A	*324186	S	32
52,00	68,00	68,80	8,00	A	*713016	N	32
52,00	69,00	69,28	10,00	A	52X69X10	S	35
52,00	69,75	70,00	9,00	A	*52X70X9	S	32
52,00	69,75	70,00	13,00	A	*52X70X13	S	32
52,00	70,00	70,20	8,00	A	52X70X8	S	32
52,00	70,00	70,27	8,50	A	710187➡	N	32
52,00	70,00	70,27	7,50	A	225540%	S	#
52,00	70,00	70,27	8,00	A	225225	S	47
52,00	71,75	72,00	9,00	A	*52X72X9	S	32
52,00	71,75	72,00	10,00	A	*52X72X10	S	32
52,00	71,75	72,00	12,00	A	*52X72X12	S	32
52,00	72,00	72,20	8,00	A	52X72X8	S	35
52,00	72,00	72,20	8,00	A	*52X72X8V	V	32
52,00	72,00	72,28	8,00	A	225230	S	35
52,00	72,00	72,28	8,00	A	*350858	S	35
52,00	72,00	72,28	8,00	A	710242➡	N	32
52,00	74,75	75,00	10,00	A	*52X75X10	S	32
52,00	75,00	75,11	7,50	A	225275	S	66
52,00	75,00	75,28	12,00	A	52X75X12	S	35
52,00	75,00	75,30	14,70	A	*713059	S	47
52,00	77,00	78,00	9,00	A	710107%	S	#
52,00	77,72	78,00	10,00	A	*52X78X10	S	32
52,00	78,00	78,28	9,00	A	225278	N	35
52,00	79,72	80,00	13,00	A	*52X80X13	S	32
52,00	80,00	80,28	10,00	A	52X80X10⬅➡	S	32
52,00	82,00	82,20	8,00	A	52X82X8	S	32
52,00	84,72	85,00	9,00	A	*52X85X9	S	32
52,00	84,72	85,00	10,00	A	*52X85X10	S	32
52,00	85,00	85,20	8,00	A	52X85X7	S	32
52,00	85,00	85,20	8,00	A	*52X85X8	S	32
52,00	89,72	90,00	10,00	A	*52X90X10	S	32
53,00	67,95	68,20	7,00	A	*53X68.2X7	S	32
53,00	68,00	68,28	10,00	A	53X68X10	S	32
53,00	68,20	68,48	7,00	A	710175	S	32
53,00	69,00	69,11	10,30	A	*205009	F	205
53,00	71,75	72,00	10,00	A	*53X72X10	S	32
53,00	72,75	73,00	10,00	A	*53X73X10	S	32
53,00	79,72	80,00	13,00	A	*53X80X13	S	32
54,00	63,75	64,00	9,00	A	*54X64X9	S	32
54,00	64,75	65,00	10,00	A	*54X65X10	S	32
54,00	64,75	65,00	13,00	A	*54X65X13	S	32
54,00	65,00	65,20	8,00	A	54X65X8	S	32
54,00	65,00	65,28	12,50	A	2002	S	47
54,00	66,00	66,23	7,50	A	225410	S	#
54,00	67,75	68,00	10,00	A	*54X68X10	S	32
54,00	69,00	69,23	7,00	A	710239	N	40
54,00	69,75	70,00	9,00	A	*54X70X9	S	32
54,00	72,00	72,25	10,00	A	54X72X10	S	32
54,00	72,00	72,25	10,00	A	225420	S	32
54,00	72,25	72,50	9,00	A	*54X72.5X9	S	32
54,00	73,00	73,20	8,00	A	54X73X8	S	32
54,00	73,00	73,40	12,75	A	712125➡	T	FW-H
54,00	73,75	74,00	10,00	A	*54X74X10	S	32
54,00	74,75	75,00	10,00	A	*54X75X10	S	32
54,00	75,18	75,48	17,00	A	710073	S	#
54,00	75,75	76,00	8,00	A	*54X76X8	S	32
54,00	76,00	76,20	14,00	A	710438	S	#
54,00	79,72	80,00	10,00	A	*54X80X10	S	32
54,00	80,72	81,00	10,00	A	*54X81X10	S	32
54,00	81,00	81,20	8,00	A	*54X81X8	S	32
54,00	81,72	82,00	11,00	A	*54X82X11	S	32
54,00	81,99	82,17	8,00	A	710203	S	66
54,00	82,00	82,30	10,00	A	225450	S	32
54,00	82,00	82,35	10,00	A	54X82X10	S	32
54,00	85,00	85,25	10,00	A	225460	S	32
54,00	85,00	85,28	10,00	A	54X85X10	S	32
54,50	69,75	70,00	8,00	A	*54.5X70X8	S	32
55,00	55,00	80,30	10,00	A	*713126	N	48

For Illustration and Material Data See Technical Section

Designed For A Specific Application - Not Recommended For General Use ➡ Hydrodynamic Lip Design-CW ⬅➡ Hydrodynamic Lip Design-Bidirectional % External Bore

* The U.S. customer service number is 877-4-TIMKEN. The Canadian customer service numbers are 800-565-4927 (English) and 800-565-0438 (French-Canadian).

Shaft Size	Hsg. Bore	Seal O.D.	Seal Width	Grp.	Part No.	Lip Mat'l	Illus./ Type
55,00	64,75	65,00	8,00	A	* 55X65X8	S	32
55,00	64,75	65,00	10,00	A	* 55X65X10	S	32
55,00	67,75	68,00	10,00	A	* 55X68X10	S	32
55,00	68,00	68,20	8,00	A	710127	S	#
55,00	68,00	68,28	8,00	A	55X68X8	S	32
55,00	68,00	68,30	8,00	A	225500	S	32
54,99	68,53	68,91	4,11	A	* 9471	S	#
55,00	69,75	70,00	9,00	A	* 55X70X9	S	32
55,00	69,75	70,00	10,00	A	* 55X70X10	S	32
55,00	69,75	70,00	12,00	A	* 55X70X12	S	32
55,00	70,00	70,10	10,26	A	3723	S	66
55,00	70,00	70,20	8,00	A	* 55X70X8V	V	32
55,00	70,00	70,20	8,00	A	710279	V	32
55,00	70,00	70,20	8,00	A	* 713064	V	32
55,00	70,00	70,27	8,00	A	55X70X8	S	35
55,00	70,00	70,27	9,00	A	225505	S	32
55,00	71,75	72,00	9,00	A	* 55X72X9	S	32
55,00	71,75	72,00	10,00	A	* 55X72X10	S	32
55,00	71,75	72,00	12,00	A	* 55X72X12	S	32
55,00	72,00	72,20	8,00	A	* 55X72X8V	V	32
55,00	72,00	72,20	10,50	A	225535	S	32
55,00	72,00	72,20	12,00	A	* 713065	N	48
55,00	72,00	72,25	8,00	A	225530	S	35
55,00	72,00	72,25	8,00	A	55X72X8	S	35
55,00	72,75	73,00	10,00	A	* 55X73X10	S	32
55,00	74,00	74,10	9,20	A	1207N	S	49
55,00	74,00	74,28	9,20	A	1207	S	49
55,00	74,75	75,00	9,00	A	* 55X75X9	S	32
55,00	74,75	75,00	12,00	A	* 55X75X12	S	32
55,00	75,00	75,20	7,00	A	**55X100X7**	S	32
55,00	75,00	75,20	8,00	A	55X75X8	S	35
55,00	75,00	75,20	10,00	A	* 55X75X10V	V	35
55,00	75,00	75,35	10,00	A	55X75X10	S	35
55,00	75,00	75,35	10,00	A	225545	S	35
55,00	75,75	76,00	12,00	A	* 55X76X12	S	32
55,00	76,00	76,20	10,00	A	* 713125	S	47
55,00	77,72	78,00	9,00	A	* 55X78X9	S	32
55,00	77,72	78,00	12,00	A	* 55X78X12	S	32
55,00	78,00	78,28	10,00	A	55X78X10	S	35
55,00	79,72	80,00	10,00	A	* 55X80X10	S	32
55,00	79,72	80,00	12,00	A	* 55X80X12	S	32
55,00	80,00	80,20	8,00	A	* 55X80X8V	V	35
55,00	80,00	80,28	8,00	A	55X80X8	S	35
55,00	80,00	80,30	10,00	A	* 713127	S	47
55,00	81,72	82,00	9,00	A	* 55X82X9	S	32
55,00	82,00	82,30	12,00	A	55X82X12	S	35
55,00	82,00	82,30	10,00	A	1958	S	35
55,00	84,72	85,00	12,00	A	* 55X85X12	S	32
55,00	84,72	85,00	14,00	A	* 55X85X14	S	32
55,00	85,00	85,20	8,00	A	55X85X8	S	32
55,00	85,00	85,31	10,00	A	55X85X10	S	35
55,00	88,00	88,20	8,00	A	55X88X8 ⬅➡	S	32
55,00	88,00	88,20	8,00	A	* 55X88X10	S	32
55,00	89,72	90,00	8,00	A	* 55X90X8	S	32
55,00	89,72	90,00	10,00	A	* 55X90X10	S	32
55,00	90,00	90,28	13,00	A	55X90X13	S	35
55,00	95,00	95,20	8,00	A	* 55X95X8	S	32
55,00	99,72	100,00	10,00	A	* 55X100X10	S	32
55,00	99,72	100,00	12,00	A	* 55X100X12	S	32
55,00	100,00	100,30	12,70	A	55X100X13	S	45
54,99	101,68	101,80	11,10	A	* 477674V	V	47
56,00	66,00	66,20	17,00	A	710382	S	#
56,00	67,00	67,20	6,00	A	710169	S	#
56,00	68,00	68,12	10,00	A	56X68X10	N	48
56,00	68,00	68,28	10,00	A	1932	S	49
56,00	69,75	70,00	9,00	A	* 56X70X9	S	32
56,00	70,00	70,20	8,00	A	56X70X8	S	35
56,00	70,00	70,20	8,00	A	* 56X70X8V	V	35
56,00	71,75	72,00	8,00	A	* 56X72X8	S	32
56,00	71,75	72,00	9,00	A	* 56X72X9	S	32
56,00	72,00	72,20	7,00	A	56X72X7	S	32
56,00	72,00	72,20	8,00	A	710393	S	#
56,00	72,00	72,27	12,50	A	225227	S	#
56,00	72,00	72,29	11,50	A	225650 ⬅➡	S	32
56,00	72,00	72,40	11,50	A	56X72X11.5	S	35
56,00	72,75	73,00	10,00	A	* 56X73X10	S	32
56,00	73,00	73,23	7,50	A	225673	S	#
56,00	73,00	73,28	12,50	A	1993	S	47
56,00	74,00	74,14	8,50	A	710176	S	87
56,00	74,00	74,20	8,00	A	710125	S	#
56,00	75,00	75,13	6,50	A	4899	S	66
56,00	75,00	75,20	7,00	A	56X75X7	S	32
56,00	75,00	75,33	8,00	A	225775	S	#
56,00	75,75	76,00	8,00	A	* 56X76X8	S	32
56,00	76,00	76,12	12,30	A	710108	S	66
56,00	76,00	76,15	11,50	A	* 4905	S	72
56,00	76,00	76,15	11,50	A	710146	S	72
56,00	78,00	78,20	8,00	A	* 56X78X8	S	32
56,00	78,00	78,28	7,50	A	225678	S	#
56,00	79,72	80,00	10,00	A	* 56X80X10	S	32
56,00	79,72	80,00	13,00	A	* 56X80X13	S	32
56,00	80,00	80,28	8,00	A	56X80X8	S	32
56,00	82,00	82,20	8,00	A	56X82X8	S	32
56,00	84,72	85,00	10,00	A	* 56X85X10	S	32
56,00	85,00	85,28	8,00	A	56X85X8	S	35
56,00	88,00	88,20	8,00	A	56X88X8	S	32
56,00	90,00	90,20	8,00	A	56X90X8	S	32
56,00	122,00	122,25	8,00	A	710086	S	#
57,00	57,12	82,55	7,47	A	* 7068%	S	200E
57,00	66,75	67,00	6,00	A	* 57X67X6	S	32
57,00	67,00	67,11	6,00	A	1984	S	25
57,00	67,00	67,11	6,00	A	* 253752	S	25
57,00	72,00	72,25	8,40	A	1964	S	47
57,00	74,75	75,00	12,00	A	* 57X75X12	S	32
57,00	77,00	77,20	8,00	A	710129	S	#
57,00	79,00	79,28	13,50	A	710072	S	#
57,00	79,00	79,28	14,98	A	710074	S	#
57,00	79,72	80,00	12,00	A	* 57X80X12	S	32
57,00	80,00	80,10	8,00	A	710225	S	#
57,00	81,00	81,10	9,00	A	1928	S	47
57,00	81,00	81,20	8,00	A	* 57X81X8	S	32
57,00	82,22	82,50	10,00	A	* 57X82.5X10	S	32
57,00	84,72	85,00	10,00	A	* 57X85X10	S	32
57,00	84,72	85,00	12,00	A	* 57X85X12	S	32
57,00	84,72	85,00	15,00	A	* 57X85X15	S	32
57,00	85,00	85,20	13,00	A	57X85X13	S	32
57,00	92,00	92,20	8,00	A	* 57X92X8	S	32

For Illustration and Material Data See Technical Section

Designed For A Specific Application - Not Recommended For General Use ⬅➡ Hydrodynamic Lip Design-Bidirectional % External Bore

* The U.S. customer service number is 877-4-TIMKEN. The Canadian customer service numbers are 800-565-4927 (English) and 800-565-0438 (French-Canadian).

Shaft Size	Hsg. Bore	Seal O.D.	Seal Width	Grp.	Part No.	Lip Mat'l	Illus./ Type
58,00	67,75	68,00	9,00	A	∗58X68X9	S	32
58,00	69,75	70,00	7,00	A	∗58X70X7	S	32
58,00	69,75	70,00	11,00	A	∗58X70X11	S	32
58,00	71,75	72,00	9,00	A	∗58X72X9	S	32
58,00	71,75	72,00	10,00	A	∗58X72X10	S	32
58,00	72,00	72,18	8,00	A	225872	S	33
58,00	72,00	72,20	8,00	A	∗58X72X8V	V	35
58,00	72,00	72,28	8,00	A	58X72X8	S	35
58,00	73,00	73,10	8,50	A	710439	S	#
58,00	73,75	74,00	10,00	A	∗58X74X10	S	32
58,00	74,00	74,12	13,00	A	225874	N	101
58,00	74,00	74,20	10,00	A	710271⬅	S	32
58,00	74,75	75,00	9,00	A	∗58X75X9	S	32
58,00	74,75	75,00	10,00	A	∗58X75X10	S	32
58,00	74,75	75,00	12,00	A	∗58X75X12	S	32
58,00	75,00	75,10	9,00	A	710400	S	47
58,00	75,00	75,20	7,00	A	710136	S	#
58,00	75,00	75,28	11,00	A	58X75X11	S	35
58,00	75,00	75,28	11,00	A	225875	S	32
58,00	76,00	76,10	6,50	A	710183	S	66
58,00	76,00	76,23	7,80	A	710230	S	#
58,00	77,00	77,28	8,50	A	225877	N	35
58,00	77,72	78,00	9,00	A	∗58X78X9	S	32
58,00	77,72	78,00	12,00	A	∗58X78X12	S	32
58,00	78,00	78,20	8,00	A	∗58X78X8	S	32
58,00	78,00	78,20	10,00	A	710144⬅	S	#
58,00	79,72	80,00	9,00	A	∗58X80X9	S	32
58,00	79,72	80,00	10,00	A	∗58X80X10	S	32
58,00	79,72	80,00	12,00	A	∗58X80X12	S	32
58,00	79,72	80,00	13,00	A	∗58X80X13	S	32
58,00	80,00	80,20	8,00	A	∗58X80X8V	V	35
58,00	80,00	80,28	8,00	A	225880	S	35
58,00	80,00	80,28	8,00	A	58X80X8	S	35
57,99	80,14	80,24	9,53	A	493291	S	49
58,00	80,98	81,18	6,35	A	∗341119	S	34
58,00	81,72	82,00	12,00	A	∗58X82X12	S	32
58,00	82,00	82,20	8,00	A	∗58X82X8	S	32
58,00	84,72	85,00	8,00	A	∗58X85X8	S	32
58,00	84,72	85,00	12,00	A	∗58X85X12	S	32
58,00	85,00	85,25	13,00	A	58X85X13	S	32
58,00	85,00	85,28	10,00	A	58X85X10	S	35
58,00	88,00	88,20	8,00	A	58X88X8	S	32
58,00	90,00	90,28	10,00	A	58X90X10	S	35
58,00	91,72	92,00	8,00	A	∗58X92X8	S	32
58,00	103,00	103,20	11,00	A	710268⬅	N	40
59,00	75,00	75,11	10,00	A	710168	S	47
59,00	78,30	78,55	8,00	A	710229	S	40
59,00	78,30	78,55	8,00	A	710231	S	32
59,00	100,00	100,28	10,00	A	710121	N	#
60,00	69,75	70,00	10,00	A	∗60X70X10	S	32
60,00	69,75	70,00	12,00	A	∗60X70X12	S	32
60,00	71,75	72,00	9,00	A	∗60X72X9	S	32
60,00	71,75	72,00	10,00	A	∗60X72X10	S	32
60,00	72,00	72,10	7,50	A	710379	S	47
60,00	72,00	72,28	8,00	A	60X72X8	S	35
60,00	73,75	74,00	10,00	A	∗60X74X10	S	32
60,00	74,00	74,10	10,00	A	226001⬅	V	25
60,00	74,75	75,00	9,00	A	∗60X75X9	S	32
60,00	74,75	75,00	10,00	A	∗60X75X10	S	32
60,00	74,75	75,00	12,00	A	∗60X75X12	S	32
60,00	75,00	75,20	8,00	A	∗60X75X8V	V	32
60,00	75,00	75,28	8,00	A	60X75X8	S	35
60,00	75,00	75,33	9,00	A	226015⬅	N	32
60,00	75,00	75,50	10,00	A	712113➡	T	FW-H
60,00	75,00	86,00	11,80	A	710093	S	#
60,00	75,75	76,00	9,00	A	∗60X76X9	S	32
60,00	76,72	77,00	12,00	A	∗60X77X12	S	32
60,00	77,72	78,00	9,00	A	∗60X78X9	S	32
60,00	77,72	78,00	10,00	A	∗60X78X10	S	32
60,00	78,00	78,20	8,00	A	∗60X78X8	S	32
60,00	78,00	78,28	8,00	A	226018	N	35
60,00	79,22	79,50	10,00	A	∗60X79.5X10	S	32
60,00	79,72	80,00	9,00	A	∗60X80X9	S	32
60,00	79,72	80,00	10,00	A	∗60X80X10	S	32
60,00	79,72	80,00	12,00	A	∗60X80X12	S	32
60,00	79,72	80,00	13,00	A	∗60X80X13	S	32
60,00	80,00	80,20	8,00	A	60X80X8	S	35
60,00	80,00	80,20	8,00	A	∗60X80X8V	V	32
60,00	80,00	80,20	8,00	A	710333⬅	S	32
60,00	80,00	80,29	8,00	A	226020	S	35
60,00	81,72	82,00	9,00	A	∗60X82X9	S	32
60,00	82,00	82,20	7,00	A	**60X82X7**	S	32
60,00	82,00	82,20	10,00	A	710390➡	N	32
60,00	82,00	82,20	12,00	A	710350➡	V	#
60,00	82,00	82,20	12,00	A	712006⬅	H	32
60,00	82,00	82,28	12,00	A	2001⬅	S	32
60,00	82,00	82,30	12,00	A	60X82X12	S	35
60,00	83,72	84,00	10,00	A	∗60X84X10	S	32
60,00	84,72	85,00	6,00	A	∗60X85X6	S	32
60,00	84,72	85,00	10,00	A	∗60X85X10	S	32
60,00	84,72	85,00	13,00	A	∗60X85X13	S	32
60,00	85,00	85,20	8,00	A	∗60X85X8V	V	32
60,00	85,00	85,20	12,00	A	60X85X12	S	32
60,00	85,00	85,28	8,00	A	60X85X8	S	35
60,00	85,50	85,70	7,00	A	∗4599H➡	H	#
60,00	85,72	86,00	10,00	A	∗60X86X10	S	32
60,00	86,00	86,10	7,00	A	710182	S	66
60,00	88,00	88,20	8,00	A	∗60X88X8	S	32
60,00	89,72	90,00	11,00	A	∗60X90X11	S	32
60,00	89,72	90,00	12,00	A	∗60X90X12	S	32
60,00	89,72	90,00	13,00	A	∗60X90X13	S	32
60,00	90,00	90,25	8,00	A	60X90X8	S	32
60,00	90,00	90,25	22,00	A	1985	S	#
60,00	90,00	90,27	10,00	A	60X90X10	S	35
60,00	90,00	90,30	12,50	A	∗713128	V	#
60,00	94,72	95,00	10,00	A	∗60X95X10	S	32
60,00	94,72	95,00	12,00	A	∗60X95X12	S	32
60,00	94,72	95,00	13,00	A	∗60X95X13	S	32
60,00	95,00	95,20	8,00	A	60X95X8	S	32
60,00	99,72	100,00	13,00	A	∗60X100X13	S	32
60,00	100,00	100,20	8,00	A	∗60X100X8	S	32
60,00	100,00	100,20	10,00	A	60X100X10⬅➡	N	32
60,00	103,00	103,10	12,00	A	710276⬅➡	N	40
60,00	103,72	104,00	12,00	A	∗60X104X12	S	32
60,00	105,00	105,20	8,00	A	∗60X105X8	S	32
60,00	109,72	110,00	12,00	A	∗60X110X12	S	32
60,00	110,00	110,20	8,00	A	60X110X8	S	32
60,50	77,72	78,00	10,00	A	∗60.5X78X10	S	32

For Illustration and Material Data See Technical Section

Designed For A Specific Application - Not Recommended For General Use ➡ Hydrodynamic Lip Design-CW ⬅ Hydrodynamic Lip Design-CCW

⬅➡ Hydrodynamic Lip Design-Bidirectional

∗ The U.S. customer service number is 877-4-TIMKEN. The Canadian customer service numbers are 800-565-4927 (English) and 800-565-0438 (French-Canadian).

Shaft Size	Hsg. Bore	Seal O.D.	Seal Width	Grp.	Part No.	Lip Mat'l	Illus./ Type
61,00	76,00	76,28	7,00	A	226150	S	#
61,00	88,00	88,00	7,00	A	710170	S	#
62,00	74,00	74,10	7,00	A	710392	S	#
62,00	74,75	75,00	10,00	A	* 62X75X10	S	32
62,00	74,75	75,00	12,00	A	* 62X75X12	S	32
62,00	77,72	78,00	10,00	A	* 62X78X10	S	32
62,00	78,00	78,10	7,00	A	710213	S	281
62,00	78,00	78,20	8,00	A	* 62X78X8	S	32
62,00	79,72	80,00	12,00	A	* 62X80X12	S	32
62,00	80,00	80,30	10,00	A	* 713130	N	47
62,00	80,00	80,20	9,00	A	62X80X9	S	32
62,00	80,00	80,20	10,00	A	* 62X80X10V	V	35
62,00	80,00	80,28	10,00	A	62X80X10	S	35
62,00	80,00	80,30	12,00	A	* 713156	N	48
62,00	80,00	80,80	12,00	A	* 713017	V	32
62,00	81,72	82,00	10,00	A	* 62X82X10	S	32
62,00	82,00	82,20	8,00	A	* 62X82X8	S	32
62,00	84,72	85,00	10,00	A	* 62X85X10	S	32
62,00	84,72	85,00	12,00	A	* 62X85X12	S	32
62,00	84,72	85,00	13,00	A	* 62X85X13	S	32
62,00	85,00	85,30	10,00	A	* 713131	N	47
62,00	85,00	85,13	8,00	A	62X85X8	S	41
62,00	85,00	85,13	8,00	A	226285	S	41
62,00	85,00	85,13	8,00	A	* 414072	S	41
62,00	88,00	88,20	8,00	A	62X88X8	S	32
62,00	88,72	89,00	12,00	A	* 62X89X12	S	32
62,00	89,72	90,00	13,00	A	* 62X90X13	S	32
62,00	90,00	90,28	10,00	A	62X90X10	S	35
62,00	92,00	92,20	8,00	A	62X92X8	S	32
62,00	94,72	95,00	12,00	A	* 62X95X12	S	32
62,00	99,72	100,00	10,00	A	* 62X100X10	S	32
62,00	99,72	100,00	12,00	A	* 62X100X12	S	32
62,00	100,00	100,40	12,00	A	* 713129	N	47
62,00	100,00	100,20	8,00	A	* 62X100X8	S	32
62,00	100,00	100,30	7,00	A	62X100X7	S	32
62,00	109,72	110,00	13,00	A	* 62X110X13	S	32
63,00	78,00	78,20	8,00	A	* 63X78X8	S	32
63,00	79,72	80,00	9,00	A	* 63X80X9	S	32
63,00	80,00	80,20	8,00	A	* 63X80X8	S	32
63,00	80,00	80,30	12,00	A	* 713068	S	47
63,00	82,00	82,20	8,00	A	* 63X82X8	S	32
63,00	82,22	82,50	10,00	A	* 63X82.5X10	S	32
62,99	84,07	84,23	12,70	A	6785	F	35
63,00	84,72	85,00	12,00	A	* 63X85X12	S	32
63,00	85,00	85,28	10,00	A	63X85X10	S	32
63,00	87,72	88,00	12,00	A	* 63X88X12	S	32
63,00	88,00	88,20	8,00	A	* 63X88X8	S	32
63,00	89,72	90,00	12,00	A	* 63X90X12	S	32
63,00	90,00	90,14	10,00	A	63X90X10	S	32
63,00	90,00	90,10	7,00	A	1935	S	47
63,00	99,72	100,00	10,00	A	* 63X100X10	S	32
63,00	99,72	100,00	13,00	A	* 63X100X13	S	32
63,50	84,72	85,00	12,00	A	* 63.5X85X12	S	32
64,00	76,00	76,20	7,00	A	710256	S	#
64,00	77,00	77,20	8,00	A	710130	S	#
64,00	79,72	80,00	12,00	A	* 64X80X12	S	32
64,00	79,72	80,00	13,00	A	* 64X80X13	S	32
64,00	80,00	80,20	8,00	A	226480⬅	H	33
64,00	80,00	80,20	8,00	A	* 713160➡	S	48
64,00	80,00	80,20	8,00	A	* 713161⬅	S	47
64,00	80,00	80,20	8,00	A	* 713162⬅	S	32
64,00	80,00	80,28	8,00	A	64X80X8	S	32
64,00	80,00	80,30	8,00	A	* 713069	V	32
64,00	84,72	85,00	10,00	A	* 64X85X10	S	32
64,00	84,72	85,00	12,00	A	* 64X85X12	S	32
64,00	90,00	90,28	13,00	A	* 64X90X13	S	32
64,00	119,72	120,00	12,00	A	* 64X120X12	S	32
64,00	132,00	132,10	13,00	A	710277	N	#
65,00	74,75	75,00	8,00	A	* 65X75X8	S	32
65,00	74,75	75,00	10,00	A	* 65X75X10	S	32
65,00	74,75	75,00	12,00	A	* 65X75X12	S	32
65,00	77,72	78,00	12,00	A	* 65X78X12	S	32
65,00	79,72	80,00	10,00	A	* 65X80X10	S	32
65,00	79,72	80,00	12,00	A	* 65X80X12	S	32
65,00	80,00	80,20	8,00	A	* 65X80X8V	V	32
65,00	80,00	80,28	8,00	A	65X80X8	S	32
65,00	81,00	81,28	7,00	A	226510➡	N	32
65,00	81,72	82,00	9,00	A	* 65X82X9	S	32
65,00	81,72	82,00	12,00	A	* 65X82X12	S	32
65,00	82,00	82,09	8,00	A	710094	S	66
65,00	82,00	82,20	8,00	A	* 65X82X8	S	32
65,00	84,00	84,30	9,00	A	712005➡	H	32
65,00	84,72	85,00	12,00	A	* 65X85X12	S	32
65,00	84,72	85,00	13,00	A	* 65X85X13	S	32
65,00	85,00	85,30	13,00	A	* 713132	V	32
65,00	85,00	85,10	10,00	A	710373	S	47
65,00	85,00	85,20	8,00	A	65X85X8	S	35
65,00	85,00	85,20	8,00	A	* 65X85X8V	V	35
65,00	85,00	85,27	10,00	A	226520	S	35
65,00	85,00	85,27	10,00	A	65X85X10	S	35
65,00	87,72	88,00	12,00	A	* 65X88X12	S	32
65,00	87,72	88,00	13,00	A	* 65X88X13	S	32
65,00	88,00	88,20	8,00	A	65X88X8	S	35
65,00	88,00	88,20	10,00	A	65X88X10	S	32
65,00	88,00	88,20	12,00	A	710367➡	S	40
65,00	89,72	90,00	8,00	A	* 65X90X8	S	32
65,00	89,72	90,00	12,00	A	* 65X90X12	S	32
65,00	90,00	90,20	7,00	A	65X90X7	S	32
65,00	90,00	90,20	10,00	A	* 65X90X10V	V	32
65,00	90,00	90,20	13,00	A	65X90X13	S	35
65,00	90,00	90,28	10,00	A	226530	S	35
65,00	90,00	90,28	10,00	A	65X90X10	S	35
65,00	94,72	95,00	10,00	A	* 65X95X10	S	32
65,00	94,72	95,00	12,00	A	* 65X95X12	S	32
65,00	94,72	95,00	13,00	A	* 65X95X13	S	32
65,00	94,72	95,00	14,00	A	* 65X95X14	S	32
65,00	95,00	95,20	7,00	A	**65X95X7**	S	32
65,00	95,00	95,20	8,00	A	* 65X95X8	S	32
65,00	99,72	100,00	9,50	A	* 65X100X9.5	S	32
65,00	99,72	100,00	12,00	A	* 65X100X12	S	32
65,00	99,72	100,00	13,00	A	* 65X100X13	S	32
65,00	100,00	100,20	10,00	A	* 65X100X10V	V	35
65,00	100,00	100,28	10,00	A	65X100X10	S	35
65,00	100,00	100,30	7,00	A	65X100X7	S	32
65,00	101,72	102,00	13,00	A	* 65X102X13	S	32
65,00	104,72	105,00	12,00	A	* 65X105X12	S	32

For Illustration and Material Data See Technical Section

Designed For A Specific Application - Not Recommended For General Use ➡ Hydrodynamic Lip Design-CW ⬅ Hydrodynamic Lip Design-CCW

* The U.S. customer service number is 877-4-TIMKEN. The Canadian customer service numbers are 800-565-4927 (English) and 800-565-0438 (French-Canadian).

Metric List Sizes & Type

Shaft Size	Hsg. Bore	Seal O.D.	Seal Width	Grp.	Part No.	Lip Mat'l	Illus./ Type
65,00	105,00	105,20	8,00	A	*65X105X8	S	32
65,00	109,72	110,00	10,00	A	*65X110X10	S	32
65,00	109,72	110,00	12,00	A	*65X110X12	S	32
65,00	109,72	110,00	13,00	A	*65X110X13	S	32
65,00	110,00	110,20	8,00	A	*65X110X8	S	32
65,00	114,72	115,00	12,00	A	*65X115X12	S	32
65,00	114,72	115,00	13,00	A	*65X115X13	S	32
65,00	115,00	115,20	8,00	A	*65X115X8	S	32
65,00	119,72	120,00	13,00	A	*65X120X13	S	32
65,00	120,00	120,20	8,00	A	*65X120X8	S	32
65,00	139,70	140,00	14,00	A	*65X140X14	S	32
66,00	80,00	80,11	9,00	A	226610	N	41
66,00	85,00	85,12	10,00	A	710092	S	41
67,00	81,72	82,00	7,00	A	*67X82X7	S	32
68,00	82,00	82,20	7,00	A	68X82X7	S	35
68,00	82,00	82,20	7,00	A	710378	S	35
68,00	84,00	84,23	8,50	A	710234⬅	N	32
68,00	84,72	85,00	10,00	A	*68X85X10	S	32
68,00	85,00	85,20	8,00	A	68X85X8	S	35
68,00	86,00	86,20	8,00	A	710334⬅	N	32
68,00	86,00	86,31	8,00	A	226820➡	H	32
68,00	88,00	88,20	8,00	A	*68X88X8	S	32
68,00	88,00	88,20	8,00	A	710446➡	S	35
68,00	89,00	89,20	11,00	A	712511➡	V	32
68,00	89,72	90,00	8,00	A	*68X90X8	S	32
68,00	89,72	90,00	12,00	A	*68X90X12	S	32
68,00	89,72	90,00	13,00	A	*68X90X13	S	32
68,00	90,00	90,10	12,00	A	710440	S	47
68,00	90,00	90,15	10,00	A	712108➡	T	FW-H
68,00	90,00	90,20	7,00	A	68X90X7	S	32
68,00	90,00	90,20	10,00	A	*68X90X10V	V	32
68,00	90,00	90,32	10,00	A	68X90X10	S	35
68,00	94,72	95,00	13,00	A	*68X95X13	S	32
68,00	95,00	95,20	8,00	A	*68X95X8	S	32
68,00	95,00	95,20	10,00	A	68X95X10	S	35
68,00	95,00	95,30	13,00	A	226840	V	#
68,00	97,72	98,00	10,00	A	*68X98X10	S	32
68,00	99,72	100,00	12,00	A	*68X100X12	S	32
68,00	100,00	100,20	10,00	A	68X100X10	S	35
68,00	100,00	100,28	13,00	A	68X100X13	S	35
68,00	124,00	124,10	12,00	A	710275⬅	N	40
69,00	85,00	85,20	10,00	A	*713070	S	47
69,00	91,72	92,00	12,00	A	*69X92X12	S	32
70,00	–	90,00	10,00	A	*713134	V	32
70,00	–	90,00	12,00	A	*713135	N	32
70,00	–	100,00	12,00	A	*713133	N	47
70,00	79,72	80,00	10,00	A	*70X80X10	S	32
70,00	82,72	83,00	10,00	A	*70X83X10	S	32
70,00	84,72	85,00	9,00	A	*70X85X9	S	32
70,00	84,72	85,00	10,00	A	*70X85X10	S	32
70,00	85,00	85,10	8,00	A	*713022	V	48
70,00	85,00	85,28	8,00	A	70X85X8	S	35
70,00	86,72	87,00	10,00	A	*70X87X10	S	32
70,00	87,00	87,40	8,50	A	1021⬅	V	32
70,00	87,00	87,40	8,50	A	1021V⬅	V	32
70,00	87,72	88,00	10,00	A	*70X88X10	S	32
70,00	88,00	88,20	8,00	A	*713071	V	32
70,00	88,00	88,20	9,00	A	*70X88X9V	V	35
70,00	88,00	88,25	8,00	A	70X88X8	S	48
70,00	88,00	88,25	12,00	A	70X88X12	S	32
70,00	88,00	88,25	12,00	A	227020⬅	H	32
70,00	89,72	90,00	8,00	A	*70X90X8	S	32
70,00	89,72	90,00	12,00	A	*70X90X12	S	32
70,00	89,72	90,00	13,00	A	*70X90X13	S	32
70,00	90,00	90,10	10,00	A	*713164	N	48
70,00	90,00	90,20	7,00	A	70X90X7	S	32
70,00	90,00	90,20	10,00	A	*70X90X10V	V	32
70,00	90,00	90,30	10,00	A	*713072	N	32
70,00	90,00	90,30	13,50	A	*713073	S	47
70,00	90,00	90,30	15,00	A	*713083	V	48
70,00	90,00	90,32	10,00	A	70X90X10	S	35
70,00	90,00	90,32	10,00	A	227040⬅	H	35
70,00	90,00	90,40	10,00	A	*1162	S	35
70,00	92,00	92,15	11,90	A	*477936H	H	47
70,00	92,00	92,20	12,00	A	70X92X12	S	32
70,00	92,00	92,23	12,00	A	227045	H	47
70,00	94,72	95,00	12,00	A	*70X95X12	S	32
70,00	95,00	95,20	10,00	A	*70X95X10V	V	35
70,00	95,00	95,28	10,00	A	70X95X10	S	35
70,00	95,00	95,28	13,00	A	70X95X13	S	35
70,00	99,72	100,00	12,00	A	*70X100X12	S	32
70,00	99,72	100,00	14,00	A	*70X100X14	S	32
70,00	100,00	100,20	10,00	A	70X100X10	S	32
70,00	100,00	100,20	10,00	A	*70X100X10V	V	35
70,00	100,00	100,28	13,00	A	70X100X13	S	35
70,00	101,60	101,83	11,91	A	40392⬅	T	FW-H
70,00	101,72	102,00	13,00	A	*70X102X13	S	32
70,00	104,72	105,00	12,00	A	*70X105X12	S	32
70,00	105,00	105,20	10,00	A	*70X105X10	S	32
70,00	105,00	105,20	13,00	A	70X105X13	S	35
70,00	105,00	105,30	7,00	A	70X105X7	S	32
70,00	109,72	110,00	12,00	A	*70X110X12	S	32
70,00	109,72	110,00	13,00	A	*70X110X13	S	32
70,00	110,00	110,20	10,00	A	70X110X10	S	35
70,00	111,72	112,00	13,00	A	*70X112X13	S	32
70,00	112,00	112,10	14,00	A	710339	S	25
70,00	114,72	115,00	13,00	A	*70X115X13	S	32
70,00	114,72	115,00	15,00	A	*70X115X15	S	32
70,00	119,72	120,00	13,00	A	*70X120X13	S	32
70,00	120,00	120,40	13,00	A	*713137	S	47
71,00	87,72	88,00	8,00	A	*71X88X8	S	32
72,00	85,72	86,00	7,50	A	*72X86X7.5	S	32
72,00	88,00	88,25	8,00	A	1986	S	48
72,00	89,72	90,00	8,00	A	*72X90X8	S	32
72,00	90,00	90,20	10,00	A	72X90X10	S	35
72,00	91,72	92,00	12,00	A	*72X92X12	S	32
72,00	93,72	94,00	12,00	A	*72X94X12	S	32
72,00	94,72	95,00	12,00	A	*72X95X12	S	32
72,00	94,72	95,00	13,00	A	*72X95X13	S	32
72,00	95,00	95,28	10,00	A	72X95X10	S	35
72,00	96,00	96,28	9,00	A	227235⬅	H	32
72,00	100,00	100,20	10,00	A	72X100X10	S	35
72,00	100,00	100,31	12,00	A	72X100X12⬅➡	S	32
72,00	104,72	105,00	13,00	A	*72X105X13	S	32
72,00	105,00	105,20	10,00	A	*72X105X10	S	32

For Illustration and Material Data See Technical Section
Designed For A Specific Application - Not Recommended For General Use ➡ Hydrodynamic Lip Design-CW ⬅ Hydrodynamic Lip Design-CCW
⬅➡ Hydrodynamic Lip Design-Bidirectional
* The U.S. customer service number is 877-4-TIMKEN. The Canadian customer service numbers are 800-565-4927 (English) and 800-565-0438 (French-Canadian).

Shaft Size	Hsg. Bore	Seal O.D.	Seal Width	Grp.	Part No.	Lip Mat'l	Illus./ Type
72,00	110,00	110,20	10,00	A	*72X110X10	S	32
73,00	86,00	86,28	5,00	A	239129	S	#
74,00	88,00	88,30	8,00	A	*713074	V	32
74,00	89,72	90,00	10,00	A	*74X90X10	S	32
74,00	90,00	90,15	10,00	A	227409⬅	H	32
74,00	90,00	90,30	10,00	A	*713075	N	32
74,00	90,00	90,30	10,00	A	*713076	V	32
74,00	93,72	94,00	10,00	A	*74X94X10	S	32
74,00	94,72	95,00	7,00	A	*74X95X7	S	32
74,00	98,00	98,20	12,00	A	227410➡	H	32
74,00	99,72	100,00	13,00	A	*74X100X13	S	32
75,00	83,00	87,00	4,00	A	710240%	S	#
75,00	89,72	90,00	12,00	A	*75X90X12	S	32
75,00	90,00	90,20	8,00	A	75X90X8	S	32
75,00	90,00	90,25	10,00	A	75X90X10	S	32
75,00	91,72	92,00	12,00	A	*75X92X12	S	32
75,00	93,00	93,12	8,00	A	39804➡	T	FW-H
75,00	94,72	95,00	8,00	A	*75X95X8	S	32
75,00	94,72	95,00	12,00	A	*75X95X12	S	32
75,00	94,72	95,00	13,00	A	*75X95X13	S	32
75,00	95,00	95,20	10,00	A	*75X95X10V	V	32
75,00	95,00	95,28	10,00	A	227530	S	35
75,00	95,00	95,28	10,00	A	75X95X10	S	35
75,00	95,00	95,27	10,00	A	716445	V	35
75,00	99,72	100,00	13,00	A	*75X100X13	S	32
75,00	100,00	100,10	13,00	A	710384	S	25
75,00	100,00	100,20	10,00	A	75X100X10	S	32
75,00	100,00	100,20	10,00	A	*75X100X10V	V	32
75,00	100,00	100,20	12,00	A	227540	S	32
75,00	100,00	100,27	12,00	A	75X100X12	S	32
75,00	100,00	100,27	13,00	A	227550⬅	H	32
75,00	100,00	100,30	10,00	A	*713085	N	48
75,00	100,00	100,30	17,00	A	*713084	V	48
75,00	101,72	102,00	13,00	A	*75X102X13	S	32
75,00	104,72	105,00	15,00	A	*75X105X15	S	32
75,00	105,00	105,27	13,00	A	75X105X13	S	32
75,00	105,00	105,40	12,00	A	*713136	N	48
75,00	105,72	106,00	10,00	A	*75X106X10	S	32
75,00	109,72	110,00	13,00	A	*75X110X13	S	32
75,00	110,00	110,20	10,00	A	*75X110X10	S	32
75,00	110,00	110,20	12,00	A	75X110X12	S	32
75,00	112,00	112,10	10,00	A	710376	S	#
75,00	112,00	112,17	10,00	A	710087	S	45
75,00	114,72	115,00	9,50	A	*75X115X9.5	S	32
75,00	114,72	115,00	13,00	A	*75X115X13	S	32
75,00	115,00	115,20	10,00	A	*75X115X10	S	32
75,00	115,00	115,30	12,00	A	75X115X12	S	35
75,00	119,72	120,00	12,00	A	*75X120X12	S	32
75,00	120,00	120,12	8,13	A	200322	S	200
75,00	120,00	120,20	10,00	A	75X120X10	S	32
75,00	133,70	134,00	10,00	A	*75X134X10	S	32
76,00	91,72	92,00	10,00	A	*76X92X10	S	32
76,00	92,00	92,28	9,50	A	4307V⬅	V	32
76,00	92,00	92,28	9,60	A	327995⬅	V	32
76,00	93,00	93,30	10,00	A	1019⬅	H	32
76,00	93,72	94,00	12,00	A	*76X94X12	S	32
76,00	98,00	98,20	12,00	A	227610➡	H	32
76,00	102,00	102,20	9,50	A	710375	S	#
76,00	104,72	105,00	12,00	A	*76X105X12	S	32
76,00	104,72	105,00	13,00	A	*76X105X13	S	32
77,00	99,72	100,00	10,00	A	*77X100X10	S	32
77,00	100,10	100,30	11,00	A	*712138	N	35
78,00	95,00	95,20	10,00	A	*78X95X10	S	32
78,00	99,72	100,00	13,00	A	*78X100X13	S	32
78,00	100,00	100,27	10,00	A	78X100X10	S	35
78,00	100,00	100,30	10,00	A	*713138	V	32
78,00	105,00	105,20	10,00	A	78X105X10	S	32
78,00	109,72	110,00	12,00	A	*78X110X12	S	32
78,00	109,72	110,00	13,00	A	*78X110X13	S	32
78,00	110,00	110,20	10,00	A	*78X110X10	S	32
78,00	115,00	115,20	10,00	A	78X115X10	S	32
80,00	94,72	95,00	8,00	A	*80X95X8	S	32
80,00	96,00	96,28	9,00	A	228005⬅	V	32
80,00	97,72	98,00	10,00	A	*80X98X10	S	32
80,00	98,00	98,40	10,00	A	228008⬅	V	32
80,00	99,72	100,00	8,00	A	*80X100X8	S	32
80,00	99,72	100,00	12,00	A	*80X100X12	S	32
80,00	99,72	100,00	13,00	A	*80X100X13	S	32
80,00	100,00	100,20	10,00	A	80X100X10	S	35
80,00	100,00	100,20	10,00	A	*80X100X10V	V	32
80,00	100,00	100,20	10,00	A	228015➡	H	32
80,00	100,00	100,20	10,00	A	228011⬅	V	32
80,00	100,00	100,23	10,00	A	228009⬅	H	32
80,00	100,00	100,30	10,00	A	*713077	N	47
80,00	100,00	100,30	10,00	A	*713151	V	32
80,00	100,00	100,35	13,00	A	228010⬅	H	32
80,00	100,00	100,40	10,00	A	712111➡	T	FW-H
80,00	100,00	100,40	13,00	A	712115➡	T	FW-H
80,00	100,00	100,40	13,00	A	712120➡	T	FW-H
80,00	100,00	100,40	13,00	A	712123➡	T	FW-H
80,00	104,72	105,00	12,00	A	*80X105X12	S	32
80,00	105,00	105,20	10,00	A	80X105X10	S	32
80,00	105,00	105,20	12,00	A	*80X105X12V	V	35
80,00	105,00	105,27	13,00	A	80X105X13	S	48
80,00	105,00	105,27	14,00	A	*80X105X14	S	32
80,00	105,00	105,27	14,00	A	228020	S	32
80,00	109,72	110,00	13,00	A	*80X110X13	S	32
80,00	110,00	110,20	10,00	A	*80X110X10V	V	32
80,00	110,00	110,28	10,00	A	80X110X10	S	32
80,00	110,00	110,28	12,00	A	228030	S	35
80,00	110,00	110,28	12,00	A	80X110X12	S	35
80,00	110,00	110,30	13,00	A	*713139	N	47
80,00	114,72	115,00	10,00	A	*80X115X10	S	32
80,00	114,72	115,00	13,00	A	*80X115X13	S	32
80,00	115,00	115,20	12,00	A	*80X115X12	S	32
80,00	120,00	120,20	10,00	A	80X120X10	S	32
80,00	120,00	120,28	13,00	A	80X120X13	S	32
80,00	124,72	125,00	10,00	A	*80X125X10	S	32
80,00	124,72	125,00	13,00	A	*80X125X13	S	32
80,00	124,72	125,00	14,00	A	*80X125X14	S	32
80,00	125,00	125,20	12,00	A	*80X125X12	S	32
80,00	129,70	130,00	13,00	A	*80X130X13	S	32

For Illustration and Material Data See Technical Section

Designed For A Specific Application - Not Recommended For General Use ➡ Hydrodynamic Lip Design-CW ⬅ Hydrodynamic Lip Design-CCW % External Bore

* The U.S. customer service number is 877-4-TIMKEN. The Canadian customer service numbers are 800-565-4927 (English) and 800-565-0438 (French-Canadian).

Shaft Size	Hsg. Bore	Seal O.D.	Seal Width	Grp.	Part No.	Lip Mat'l	Illus./ Type
80,00	130,00	130,20	12,00	A	*80X130X12	S	32
80,00	135,00	135,20	12,00	A	*80X135X12	S	32
80,00	140,00	140,20	12,00	A	*80X140X12	S	32
82,00	99,50	99,77	12,70	A	320691⬅	V	32
82,00	105,00	105,25	13,00	A	82X105X13	S	25
82,00	105,00	105,30	13,00	A	1945⬅	H	32
82,00	105,00	105,30	13,00	A	228480⬅	H	#
83,00	100,00	100,20	9,00	A	228250⬅	H	32
83,00	103,72	104,00	9,00	A	*83X104X9	S	32
83,00	109,72	110,00	13,00	A	*83X110X13	S	32
83,00	116,72	117,00	14,00	A	*83X117X14	S	32
84,00	99,72	100,00	10,00	A	*84X100X10	S	32
84,00	100,00	100,10	10,00	A	710294	S	47
84,00	100,00	100,20	12,00	A	*84X100X12	S	32
84,00	104,00	104,28	11,00	A	228410⬅	V	32
84,00	105,00	105,40	12,00	A	*713018	V	32
84,00	118,00	118,10	7,00	A	710363⬅	V	#
85,00	–	102,57	25,40	A	*100467➡	T	#
85,00	99,72	100,00	9,00	A	*85X100X9	S	32
85,00	99,72	100,00	10,00	A	*85X100X10	S	32
85,00	99,72	100,00	12,00	A	*85X100X12	S	32
85,00	104,72	105,00	12,00	A	*85X105X12	S	32
85,00	105,00	105,28	10,00	A	85X105X10	S	32
85,00	105,00	105,28	10,00	A	716102⬅	H	32
85,00	105,00	105,28	13,00	A	85X105X13	S	32
85,00	105,00	105,40	12,00	A	*713148	V	32
85,00	109,72	110,00	13,00	A	*85X110X13	S	32
85,00	110,00	110,20	10,00	A	85X110X10	S	35
85,00	110,00	110,20	12,00	A	*85X110X12V	V	32
85,00	110,00	110,28	12,00	A	228520	S	35
85,00	110,00	110,28	12,00	A	85X110X12	S	35
85,00	110,00	110,40	12,00	A	*713140	V	45
85,00	110,00	110,40	13,00	A	*713141	N	48
85,00	110,72	111,00	10,00	A	*85X111X10	S	32
85,00	113,00	113,20	10,50	A	710330	N	#
85,00	114,22	114,50	12,00	A	*85X114.5X12	S	32
85,00	114,72	115,00	15,00	A	*85X115X15	S	32
85,00	115,00	115,00	13,00	A	85X115X13	S	35
85,00	115,00	115,20	12,00	A	*85X115X12	S	32
85,00	119,72	120,00	10,00	A	*85X120X10	S	32
85,00	119,72	120,00	13,00	A	*85X120X13	S	32
85,00	119,72	120,00	15,00	A	*85X120X15	S	32
85,00	120,00	120,28	12,00	A	85X120X12	S	32
85,00	124,72	125,00	13,00	A	*85X125X13	S	32
85,00	124,72	125,00	14,00	A	*85X125X14	S	32
85,00	125,00	125,20	12,00	A	85X125X12	S	32
85,00	129,70	130,00	12,00	A	*85X130X12	S	32
85,00	129,70	130,00	14,00	A	*85X130X14	S	32
85,00	130,00	130,15	12,70	A	85X130X13	S	48
85,00	130,00	130,15	12,70	A	*476516	S	47
85,00	139,70	140,00	12,00	A	*85X140X12	S	32
86,00	99,72	100,00	10,00	A	*86X100X10	S	32
86,00	103,00	103,23	10,00	A	710235⬅	V	32
86,00	104,00	104,23	11,00	A	710232⬅	V	32
87,00	100,00	100,20	8,00	A	228700⬅	H	32
88,00	106,00	106,28	8,50	A	710188⬅	V	32
88,00	107,72	108,00	11,00	A	*88X108X11	S	32
88,00	108,00	108,36	11,10	A	3772⬅	H	35
88,00	108,00	108,36	11,10	A	*100239T⬅	T	FW-H
88,00	110,00	110,28	12,00	A	88X110X12	S	35
88,00	115,00	115,20	12,00	A	*88X115X12	S	32
88,00	120,00	120,20	12,00	A	*88X120X12	S	32
89,00	105,00	105,20	10,00	A	710189⬅	V	47
89,00	109,00	109,20	9,00	A	229004⬅	H	32
90,00	99,72	100,00	7,00	A	*90X100X7	S	32
90,00	99,72	100,00	12,00	A	*90X100X12	S	32
90,00	104,00	104,10	11,00	A	710237⬅	V	32
90,00	104,72	105,00	12,00	A	*90X105X12	S	32
90,00	104,72	105,00	13,00	A	*90X105X13	S	32
90,00	108,00	108,23	10,00	A	710219⬅	N	32
90,00	109,72	110,00	10,00	A	*90X110X10	S	32
90,00	110,00	110,20	9,00	A	229006⬅	H	32
90,00	110,00	110,20	12,00	A	90X110X12	S	35
90,00	110,00	110,20	12,00	A	*90X110X12V	V	32
90,00	110,00	110,31	8,50	A	229010⬅	H	32
90,00	110,00	110,31	12,00	A	229005⬅	V	32
90,00	110,00	110,31	13,00	A	*90X110X13	S	35
90,00	110,00	110,40	12,00	A	712124➡	T	FW-H
90,00	111,72	112,00	12,00	A	*90X112X12	S	32
90,00	112,42	112,70	13,00	A	*90X112.7X13	S	32
90,00	114,72	115,00	10,00	A	*90X115X10	S	32
90,00	114,72	115,00	13,00	A	*90X115X13	S	32
90,00	115,00	115,14	17,12	A	*4789S⬅➡	S	#
90,00	115,00	115,20	12,00	A	90X115X12	S	32
90,00	117,72	118,00	12,00	A	*90X118X12	S	32
90,00	119,72	120,00	13,00	A	*90X120X13	S	32
90,00	120,00	120,20	12,00	A	*90X120X12V	V	35
90,00	120,00	120,28	12,00	A	90X120X12⬅➡	S	32
90,00	124,72	125,00	15,00	A	*90X125X15	S	32
90,00	125,00	125,20	12,00	A	*90X125X12	S	32
90,00	125,00	125,30	13,00	A	90X125X13	S	32
90,00	125,00	125,70	7,00	A	90X125X7	S	32
90,00	129,70	130,00	10,00	A	*90X130X10	S	32
90,00	129,70	130,00	13,00	A	*90X130X13	S	32
90,00	130,00	130,20	12,00	A	*90X130X12	S	32
90,00	130,00	130,40	13,00	A	*713142	V	48
90,00	134,70	135,00	13,00	A	*90X135X13	S	32
90,00	135,00	135,20	12,00	A	*90X135X12	S	32
90,00	140,00	140,20	12,00	A	*90X140X12	S	32
90,00	145,00	145,20	14,00	A	90X145X14	S	32
90,00	157,86	158,00	14,27	A	39865➡	T	#
90,00	159,70	160,00	10,00	A	*90X160X10	S	32
91,00	110,00	110,26	8,50	A	229210⬅➡	V	32
91,01	111,00	111,13	10,01	A	*100052T⬅	T	FW-H
91,00	111,00	111,20	10,00	A	710056⬅	V	47
92,00	119,72	120,00	12,00	A	*92X120X12	S	32
92,00	120,00	120,24	13,00	A	92X120X13	S	35
93,00	114,00	114,20	14,00	A	710288⬅	S	32
93,00	154,00	154,10	8,00	A	710266	S	#
95,00	104,72	105,00	13,00	A	*95X105X13	S	32
95,00	109,72	110,00	11,00	A	*95X110X11	S	32
95,00	109,72	110,00	12,00	A	*95X110X12	S	32

For Illustration and Material Data See Technical Section

Designed For A Specific Application - Not Recommended For General Use ➡ Hydrodynamic Lip Design-CW ⬅ Hydrodynamic Lip Design-CCW

⬅➡ Hydrodynamic Lip Design-Bidirectional

* The U.S. customer service number is 877-4-TIMKEN. The Canadian customer service numbers are 800-565-4927 (English) and 800-565-0438 (French-Canadian).

Shaft Size	Hsg. Bore	Seal O.D.	Seal Width	Grp.	Part No.	Lip Mat'l	Illus./ Type
95,00	110,00	110,20	10,00	A	95X110X10	S	32
95,00	110,00	110,26	11,00	A	717005⬅	S	32
95,00	113,00	113,10	10,00	A	710352⬅	V	47
95,00	114,99	115,32	12,50	A	*100203T⬅	T	FW-H
95,00	115,00	115,20	13,00	A	*95X115X13V	V	32
95,00	115,00	115,25	10,00	A	717006	S	45
95,00	115,00	115,28	12,00	A	95X115X12	S	35
95,00	115,00	115,28	13,00	A	*95X115X13	S	35
95,00	115,00	115,32	12,12	A	*600305⬅	T	#
95,00	115,00	115,31	12,50	A	4359V⬅	V	32
95,00	115,00	115,40	13,50	A	*713143	N	45
95,00	118,00	118,16	8,50	A	710060⬅	H	32
95,00	119,72	120,00	8,00	A	*95X120X8	S	32
95,00	119,72	120,00	13,00	A	*95X120X13	S	32
95,00	120,00	120,20	12,00	A	*95X120X12V	V	35
95,00	120,00	120,28	12,00	A	95X120X12	S	35
95,00	120,00	120,40	13,00	A	*713086	V	48
95,00	124,72	125,00	13,00	A	*95X125X13	S	32
95,00	125,00	125,28	12,00	A	95X125X12	S	35
95,00	129,70	130,00	13,00	A	*95X130X13	S	32
95,00	130,00	130,28	12,00	A	95X130X12	S	35
95,00	130,00	130,28	12,00	A	229520	S	35
95,00	132,00	132,26	12,00	A	710085	S	#
95,00	134,70	135,00	13,00	A	*95X135X13	S	32
95,00	172,00	172,09	28,00	A	39926➡	T	W-H
95,25	120,37	120,65	12,70	A	*95.25X120.65X12S	T	32
96,00	116,00	116,26	9,00	A	710262⬅	V	32
96,00	117,00	117,28	12,00	A	710205⬅	V	32
96,00	135,00	135,76	13,00	A	*713144	S	47
97,99	114,94	115,32	15,75	A	100085⬅	T	#
98,00	120,00	120,20	13,00	A	98X120X13	S	35
100,00	113,72	114,00	10,00	A	*100X114X10	S	32
100,00	114,00	114,10	12,00	A	710410	S	47
100,00	114,72	115,00	9,00	A	*100X115X9	S	32
100,00	114,72	115,00	10,00	A	*100X115X10	S	32
100,00	114,72	115,00	12,00	A	*100X115X12	S	32
100,00	118,00	118,40	12,00	A	*713088	N	48
100,00	118,00	188,40	12,00	A	*713024	V	32
100,00	119,72	120,00	11,00	A	*100X120X11	S	32
100,00	119,72	120,00	13,00	A	*100X120X13	S	32
100,00	120,00	120,20	12,00	A	*100X120X12V	V	32
100,00	120,00	120,25	11,00	A	*712105⬅	T	W
100,00	120,00	120,12	11,00	A	231004	H	32
100,00	120,00	120,28	12,00	A	231002	S	35
100,00	120,00	120,28	12,00	A	100X120X12	S	35
100,00	120,00	120,30	10,00	A	100X120X10	S	35
100,00	123,85	123,98	12,70	A	**417967**	S	41
100,00	123,85	123,98	12,70	A	*717003	S	41
100,00	123,85	123,98	15,88	A	455186	S	45
100,00	123,85	124,00	15,88	A	*415186	S	41
100,00	124,00	124,20	13,00	A	710290⬅	V	32
100,00	124,72	125,00	10,00	A	*100X125X10	S	32
100,00	124,72	125,00	13,00	A	*100X125X13	S	32
100,00	125,00	125,20	12,00	A	*100X125X12V	V	35
100,00	125,00	125,28	12,00	A	231003	S	35
100,00	125,00	125,28	12,00	A	100X125X12	S	35
100,00	125,00	125,40	13,00	A	*713147	V	47
100,00	126,72	127,00	10,00	A	*100X127X10	S	32
100,00	129,70	130,00	10,00	A	*100X130X10	S	32
100,00	129,70	130,00	13,00	A	*100X130X13	S	32
100,00	130,00	130,20	12,00	A	*100X130X12V	V	32
100,00	130,00	130,28	12,00	A	100X130X12	S	35
100,00	130,00	130,40	12,00	A	*713089	N	48
100,00	130,00	130,40	13,50	A	*713090	N	45
100,00	130,00	130,40	13,50	A	*713091	S	41
100,00	134,70	135,00	12,00	A	*100X135X12	S	32
100,00	134,70	135,00	13,00	A	*100X135X13	S	32
100,00	134,70	135,00	14,00	A	*100X135X14	S	32
100,00	135,00	135,20	10,00	A	710351⬅	H	32
100,00	135,00	135,20	15,00	A	710391⬅	H	94
100,00	139,70	140,00	12,00	A	*100X140X12	S	32
100,00	139,70	140,00	13,00	A	*100X140X13	S	32
100,00	145,00	145,10	26,00	A	710278	N	#
100,00	149,70	150,00	10,00	A	*100X150X10	S	32
100,00	149,70	150,00	13,00	A	*100X150X13	S	32
101,00	114,00	114,10	10,00	A	710371	S	25
102,00	125,00	125,20	12,00	A	*102X125X12	S	32
102,00	130,00	130,28	13,00	A	102X130X13	S	35
105,00	120,00	120,20	11,00	A	231052	H	32
105,00	124,72	125,00	12,00	A	*105X125X12	S	32
105,00	125,00	125,28	13,00	A	105X125X13	S	32
105,00	129,70	130,00	13,00	A	*105X130X13	S	32
105,00	129,70	130,00	15,00	A	*105X130X15	S	32
105,00	130,00	130,16	11,00	A	712107➡	T	FW-H
105,00	130,00	130,20	12,00	A	*105X130X12V	V	32
105,00	130,00	130,25	12,00	A	712004⬅	V	32
105,00	130,00	130,28	12,00	A	105X130X12	S	35
105,00	134,70	135,00	13,00	A	*105X135X13	S	32
105,00	134,70	135,00	14,00	A	*105X135X14	S	32
105,00	134,70	135,00	15,00	A	*105X135X15	S	32
105,00	135,00	135,20	12,00	A	*105X135X12	S	32
105,00	135,00	135,20	14,50	A	710349⬅	V	#
105,00	136,00	136,40	13,00	A	*713092	S	#
105,00	139,70	140,00	13,00	A	*105X140X13	S	32
105,00	139,70	140,00	15,00	A	*105X140X15	S	32
105,00	140,00	140,28	12,00	A	105X140X12	S	35
105,00	144,70	145,00	15,00	A	*105X145X15	S	32
105,00	145,00	145,20	12,00	A	*105X145X12	S	32
105,00	160,00	160,20	15,00	A	*105X160X15	S	32
106,00	123,00	123,10	11,00	A	710295	S	47
106,00	125,72	126,00	12,00	A	*106X126X12	S	32
106,00	126,00	126,20	12,00	A	710366⬅	H	32
108,00	135,00	135,40	15,00	A	*713093	V	47
110,00	124,72	125,00	12,00	A	*110X125X12	S	32
110,00	129,70	130,00	13,00	A	*110X130X13	S	32
110,00	130,00	130,10	13,00	A	*713094	S	47
110,00	130,00	130,18	12,70	A	2261⬅	V	47
110,00	130,00	130,20	12,00	A	*110X130X12V	V	32
110,00	130,00	130,28	12,00	A	110X130X12	S	35
110,00	130,00	130,40	13,00	A	712112⬅	T	W
110,00	135,00	135,20	12,00	A	*110X135X12	S	32
110,00	135,00	135,30	13,00	A	110X135X13	S	32
110,00	135,00	135,30	13,00	A	*713078	V	47
110,00	139,70	140,00	14,00	A	*110X140X14	S	32
110,00	140,00	140,23	13,00	A	110X140X13	S	45
110,00	140,00	140,28	12,00	A	110X140X12	S	32

For Illustration and Material Data See Technical Section

Designed For A Specific Application - Not Recommended For General Use ➡ Hydrodynamic Lip Design-CW ⬅ Hydrodynamic Lip Design-CCW

* The U.S. customer service number is 877-4-TIMKEN. The Canadian customer service numbers are 800-565-4927 (English) and 800-565-0438 (French-Canadian).

Metric List Sizes & Type

Shaft Size	Hsg. Bore	Seal O.D.	Seal Width	Grp.	Part No.	Lip Mat'l	Illus./ Type
110,00	140,00	140,28	12,00	A	* 110X140X12V	V	32
110,00	144,70	145,00	14,00	A	* 110X145X14	S	32
110,00	145,00	145,20	12,00	A	* 110X145X12	S	32
110,00	145,00	145,30	13,00	A	110X145X13	S	35
110,00	150,00	150,25	12,00	–	110X150X12	S	35
110,00	149,70	150,00	13,00	A	* 110X150X13	S	32
110,00	150,00	150,28	15,00	A	110X150X15	S	35
110,00	155,00	155,20	15,00	A	* 110X155X15	S	32
110,00	159,70	160,00	12,00	A	* 110X160X12	S	32
110,00	160,00	160,20	15,00	A	* 110X160X15	S	32
110,00	166,70	167,00	17,00	A	* 110X167X17	S	32
110,00	169,70	170,00	12,00	A	* 110X170X12	S	32
110,00	170,00	170,18	12,70	A	476518	S	47
112,00	135,00	135,20	15,00	A	* 112X135X15	S	32
112,00	140,00	140,32	13,00	A	112X140X13	S	35
112,00	141,70	142,00	14,00	A	* 112X142X14	S	32
112,00	145,00	145,20	15,00	A	* 112X145X15	S	32
112,00	150,00	150,20	15,00	A	* 112X150X15	S	32
114,00	135,00	135,40	13,00	A	* 713095	V	32
114,00	135,00	135,25	13,00	A	713163⬅	S	47
114,00	140,00	140,28	13,00	A	114X140X13	S	35
115,00	135,00	135,20	10,00	A	710258⬅	V	32
115,00	135,00	135,20	15,00	A	* 115X135X15	S	32
115,00	139,70	140,00	13,00	A	* 115X140X13	S	32
115,00	139,70	140,00	14,00	A	* 115X140X14	S	32
115,00	140,00	140,40	13,00	A	* 713096	N	47
115,00	140,00	140,40	13,00	A	* 713097	V	32
115,00	140,00	140,20	12,00	A	* 115X140X12V	V	35
115,00	140,00	140,28	12,00	A	115X140X12	S	35
115,00	144,70	145,00	16,00	A	* 115X145X16	S	32
115,00	145,00	145,20	14,00	A	115X145X14⬅➡	S	32
115,00	145,00	145,20	15,00	A	* 115X145X15	S	32
115,00	145,00	145,30	13,00	A	115X145X13	S	35
115,00	146,20	146,50	13,00	A	* 115X146.5X13	S	32
115,00	149,70	150,00	15,00	A	* 115X150X15	S	32
115,00	150,00	150,28	12,00	A	115X150X12	S	35
115,00	155,00	155,20	15,00	A	* 115X155X15	S	32
115,00	156,00	156,10	28,00	A	710372	S	#
115,00	158,70	159,00	14,00	A	* 115X159X14	S	32
115,00	160,00	160,20	15,00	A	* 115X160X15	S	32
116,00	131,70	132,00	12,00	A	* 116X132X12	S	32
116,50	135,00	135,30	13,00	A	* 355590V⬅➡	V	35
118,00	136,00	136,40	13,00	A	* 713099	N	48
118,00	148,00	148,40	15,00	A	* 713100	V	32
118,00	173,00	173,80	28,00	A	710089	S	#
120,00	139,70	140,00	12,00	A	* 120X140X12	S	32
120,00	139,70	140,00	15,00	A	* 120X140X15	S	32
120,00	140,00	140,21	10,50	A	710084	S	47
120,00	140,00	140,20	13,00	A	712106	T	32
120,00	140,00	140,25	12,00	A	717004	S	48
120,00	140,00	140,28	13,00	A	120X140X13	S	35
120,00	140,00	140,30	13,00	A	712003⬅	V	32
120,00	145,00	145,28	12,00	A	120X145X12	S	35
120,00	145,00	145,28	12,00	A	231204	S	35
120,00	145,70	146,00	13,00	A	* 120X146X13	S	32
120,00	146,20	146,50	13,00	A	* 120X146.5X13	S	32
120,00	149,70	150,00	13,00	A	* 120X150X13	S	32
120,00	149,70	150,00	14,00	A	* 120X150X14	S	32
120,00	149,70	150,00	15,00	A	* 120X150X15	S	32
119,99	150,01	150,16	14,99	A	370220A	S	11
120,00	150,00	150,20	12,00	A	* 120X150X12V	V	32
120,00	150,00	150,28	12,00	A	120X150X12	S	35
120,00	154,70	155,00	14,00	A	* 120X155X14	S	32
120,00	154,70	155,00	16,00	A	* 120X155X16	S	32
120,00	155,00	155,20	15,00	A	* 120X155X15	S	32
120,00	158,70	159,00	14,00	A	* 120X159X14	S	32
120,00	159,70	160,00	15,00	A	* 120X160X15	S	32
120,00	160,00	160,20	12,00	A	* 120X160X12V	V	35
120,00	160,00	160,28	12,00	A	120X160X12	S	35
120,00	179,67	180,00	15,00	A	* 120X180X15	S	32
122,00	139,70	140,00	13,00	A	* 122X140X13	S	32
124,00	146,00	146,10	14,00	A	710405	S	47
124,00	158,70	159,00	14,00	A	* 124X159X14	S	32
124,00	169,70	170,00	14,50	A	* 124X170X14.5	S	32
124,00	170,00	–	14,50	A	710381%	S	#
125,00	140,00	140,18	7,00	A	* 315286	S	31
125,00	144,70	145,00	13,00	A	* 125X145X13	S	32
125,00	146,20	146,50	13,00	A	* 125X146.5X13	S	32
125,00	149,70	150,00	13,00	A	* 125X150X13	S	32
125,00	149,70	150,00	14,00	A	* 125X150X14	S	32
125,00	149,70	150,00	15,00	A	* 125X150X15	S	32
125,00	150,00	150,20	12,00	A	* 125X150X12V	V	32
125,00	150,00	150,28	12,00	A	125X150X12	S	32
125,00	150,00	150,28	12,00	A	231250	S	35
125,00	150,00	150,40	15,00	A	* 713023	V	32
125,00	154,70	155,00	14,00	A	* 125X155X14	S	32
125,00	155,00	155,20	12,00	A	125X155X12	S	32
125,00	155,00	155,20	15,00	A	* 125X155X15	S	32
125,00	159,70	160,00	15,00	A	* 125X160X15	S	32
125,00	160,00	160,28	12,00	A	125X160X12	S	35
125,00	170,00	170,20	15,00	A	125X170X15	S	32
128,00	146,00	146,10	10,00	A	710411	S	47
128,00	150,00	150,28	15,00	A	* 128X150X15	S	35
130,00	149,70	150,00	12,00	A	* 130X150X12	S	32
130,00	149,70	150,00	13,00	A	* 130X150X13	S	32
130,00	150,00	150,10	10,00	A	130X150X10	S	47
130,00	150,00	150,10	10,00	A	710380	S	47
130,00	150,00	150,20	15,00	A	* 130X150X15	S	32
130,00	150,00	150,40	13,00	A	712114⬅	T	FW-H
130,00	150,00	150,44	14,50	A	39806➡	T	FW-H
130,00	150,00	150,44	14,80	A	39805⬅	T	FW-H
130,00	154,70	155,00	14,00	A	* 130X155X14	S	32
130,00	159,70	160,00	13,00	A	* 130X160X13	S	32
130,00	159,70	160,00	14,00	A	* 130X160X14	S	32
130,00	160,00	160,20	12,00	A	* 130X160X12V	V	32
130,00	160,00	160,20	15,00	A	130X160X15	S	32
130,00	160,00	160,28	12,00	A	130X160X12	S	35
130,00	160,00	161,00	12,00	A	* 713101	N	48
130,00	164,70	165,00	13,00	A	* 130X165X13	S	32
130,00	164,70	165,00	15,00	A	* 130X165X15	S	32
130,00	169,70	170,00	13,00	A	* 130X170X13	S	32
130,00	170,00	170,20	12,00	A	* 130X170X12V	V	35
130,00	170,00	170,28	15,00	A	130X170X15	S	35

For Illustration and Material Data See Technical Section

Designed For A Specific Application - Not Recommended For General Use ➡ Hydrodynamic Lip Design-CW ⬅ Hydrodynamic Lip Design-CCW

⬅➡ Hydrodynamic Lip Design-Bidirectional % External Bore

* The U.S. customer service number is 877-4-TIMKEN. The Canadian customer service numbers are 800-565-4927 (English) and 800-565-0438 (French-Canadian).

Shaft Size	Hsg. Bore	Seal O.D.	Seal Width	Grp.	Part No.	Lip Mat'l	Illus./ Type
130,00	170,00	170,30	12,00	A	130X170X12	S	35
130,00	189,67	190,00	12,00	A	* 130X190X12	S	32
130,00	199,67	200,00	12,00	A	* 130X200X12	S	32
134,00	152,00	152,50	13,00	A	* 713102	S	47
134,00	152,00	152,50	13,50	A	* 713104	N	32
135,00	154,70	155,00	13,00	A	* 135X155X13	S	32
135,00	159,70	160,00	15,00	A	* 135X160X15	S	32
135,00	160,00	160,38	13,00	A	135X160X13	S	35
135,00	160,00	160,50	15,00	A	* 713149	S	47
135,00	162,00	162,50	13,00	A	* 713105	S	47
135,00	164,70	165,00	13,00	A	* 135X165X13	S	32
135,00	164,70	165,00	14,00	A	* 135X165X14	S	32
135,00	170,00	170,38	12,00	A	135X170X12	S	35
138,00	152,00	152,10	12,00	A	138X152X12	S	47
138,00	152,00	152,10	12,00	A	710368	S	47
138,00	152,00	152,20	15,00	A	* 138X152X15	S	32
140,00	159,70	160,00	14,00	A	* 140X160X14	S	32
140,00	160,00	160,20	12,00	A	140X160X12	S	32
140,00	160,00	160,27	13,00	A	140X160X13	S	35
140,00	160,00	160,27	13,00	A	231402	S	35
140,00	164,70	165,00	13,00	A	* 140X165X13	S	32
140,00	165,00	165,10	15,00	A	* 713106	V	47
140,00	165,00	165,28	15,00	A	* 140X165X15	S	32
140,00	165,00	165,40	15,00	A	* 713079	V	32
140,00	167,70	168,00	15,00	A	* 140X168X15	S	32
140,00	169,70	170,00	13,00	A	* 140X170X13	S	32
140,00	169,70	170,00	14,00	A	* 140X170X14	S	32
140,00	170,00	170,10	14,00	A	710406	S	47
140,00	170,00	170,20	12,00	A	* 140X170X12V	V	32
140,00	170,00	170,28	15,00	A	231405	S	35
140,00	170,00	170,30	12,00	A	140X170X12	S	32
140,00	170,00	170,43	15,00	A	140X170X15	S	35
140,00	174,70	175,00	15,00	A	* 140X175X15	S	32
140,00	179,67	180,00	15,00	A	* 140X180X15	S	32
140,00	180,00	180,30	12,00	A	140X180X12	S	35
140,00	180,00	180,38	18,00	A	140X180X18	S	32
140,00	184,67	185,00	16,00	A	* 140X185X16	S	32
142,00	156,70	157,00	10,00	A	* 142X157X10	S	32
144,00	160,00	160,25	12,00	A	144X160X12	S	35
145,00	164,00	164,10	14,00	A	145X164X14	S	47
145,00	164,00	164,10	14,00	A	710369	S	47
145,00	164,00	164,20	15,00	A	* 145X164X15	S	32
145,00	164,70	165,00	13,00	A	* 145X165X13	S	32
145,00	164,70	165,00	14,00	A	* 145X165X14	S	32
145,00	166,70	167,00	13,00	A	* 145X167X13	S	32
145,00	169,70	170,00	13,00	A	* 145X170X13	S	32
145,00	169,70	170,00	15,00	A	* 145X170X15	S	32
145,00	170,00	170,45	12,00	A	145X170X12	S	35
145,00	170,00	170,50	13,00	A	* 713107	S	47
145,00	170,00	170,50	15,00	A	* 713108	S	47
145,00	174,70	175,00	13,00	A	* 145X175X13	S	32
145,00	174,70	175,00	14,00	A	* 145X175X14	S	32
145,00	175,00	175,38	15,00	A	145X175X15	S	35
145,00	180,00	180,28	12,00	A	145X180X12	S	35
145,00	180,00	180,40	15,00	A	* 713145	S	47
148,00	170,00	170,28	15,00	A	148X170X15	S	35
150,00	167,70	168,00	13,00	A	* 150X168X13	S	32
150,00	168,00	168,10	13,00	A	* 713109	N	48
150,00	169,70	170,00	15,00	A	* 150X170X15	S	32
150,00	174,70	175,00	10,00	A	* 150X175X10	S	32
150,00	179,67	180,00	13,00	A	* 150X180X13	S	32
150,00	179,67	180,00	14,00	A	* 150X180X14	S	32
150,00	180,00	180,20	15,00	A	* 150X180X15V	V	32
150,00	180,00	180,35	12,00	A	150X180X12	S	35
150,00	180,00	180,35	15,00	A	150X180X15	S	35
150,00	184,67	185,00	16,00	A	* 150X185X16	S	32
150,00	189,67	190,00	15,00	A	* 150X190X15	S	32
150,00	199,67	200,00	13,00	A	* 150X200X13	S	32
150,00	209,67	210,00	15,00	A	* 150X210X15	S	32
150,00	224,67	225,00	12,00	A	* 150X225X12	S	32
154,00	171,70	172,00	14,00	A	* 154X172X14	S	32
154,00	172,00	172,20	15,00	A	* 154X172X15	S	32
155,00	171,70	172,00	14,00	A	* 155X172X14	S	32
155,00	173,70	174,00	12,00	A	* 155X174X12	S	32
155,00	179,67	180,00	12,00	A	* 155X180X12	S	32
155,00	179,67	180,00	13,00	A	* 155X180X13	S	32
155,00	180,00	180,23	15,00	A	155X180X15	S	32
155,00	184,67	185,00	16,00	A	* 155X185X16	S	32
156,00	180,00	180,20	15,00	A	712110⬅	T	W
156,00	180,00	180,40	15,00	A	712122⬅	T	FW-H
160,00	179,67	180,00	10,00	A	* 160X180X10	S	32
160,00	179,67	180,00	13,00	A	* 160X180X13	S	32
160,00	181,67	182,00	18,00	A	* 160X182X18	S	32
160,00	184,67	185,00	13,00	A	* 160X185X13	S	32
160,00	185,00	185,10	13,00	A	* 713110	S	47
160,00	185,00	185,20	10,00	A	* 160X185X10V	V	35
160,00	185,00	185,35	10,00	A	160X185X10	S	35
160,00	189,67	190,00	13,00	A	* 160X190X13	S	32
160,00	190,00	190,20	15,00	A	* 160X190X15V	V	32
160,00	190,00	190,35	15,00	A	160X190X15	S	35
160,00	190,00	190,40	13,00	A	712118⬅	T	FW-H
160,00	199,67	200,00	14,00	A	* 160X200X14	S	32
160,00	200,00	200,20	12,00	A	160X200X12	S	32
160,00	200,00	200,20	15,00	A	160X200X15	S	32
160,00	239,67	240,00	15,00	A	* 160X240X15	S	32
162,00	200,00	200,20	15,00	A	* 162X200X15	S	32
165,00	189,67	190,00	14,00	A	* 165X190X14	S	32
165,00	189,67	190,00	15,00	A	* 165X190X15	S	32
165,00	190,00	190,35	13,00	A	165X190X13	S	41
165,00	194,67	195,00	15,00	A	* 165X195X15	S	32
165,00	199,67	200,00	14,00	A	* 165X200X14	S	32
170,00	189,67	190,00	10,00	A	* 170X190X10	S	32
170,00	189,67	190,00	14,00	A	* 170X190X14	S	32
170,00	200,00	200,35	15,00	A	170X200X15	S	35
170,00	210,00	210,20	15,00	A	170X210X15	S	32
175,00	200,00	200,35	15,00	A	175X200X15	S	32
175,00	209,67	210,00	15,00	A	* 175X210X15	S	32
175,00	229,67	230,00	20,00	A	* 175X230X20	S	32
180,00	199,67	200,00	14,00	A	* 180X200X14	S	32
180,00	199,67	200,00	15,00	A	* 180X200X15	S	32
180,00	200,00	200,40	12,00	A	* 713111	V	32
180,00	200,00	200,40	15,00	A	* 713112	S	47
180,00	200,00	200,40	17,00	A	* 713113	V	#

For Illustration and Material Data See Technical Section

Designed For A Specific Application - Not Recommended For General Use ⬅ Hydrodynamic Lip Design-CCW

* The U.S. customer service number is 877-4-TIMKEN. The Canadian customer service numbers are 800-565-4927 (English) and 800-565-0438 (French-Canadian).

Metric List Sizes & Type

Shaft Size	Hsg. Bore	Seal O.D.	Seal Width	Grp.	Part No.	Lip Mat'l	Illus./ Type
180,00	200,00	200,20	12,00	A	*713165	S	32
180,00	210,00	210,35	15,00	A	180X210X15	S	35
180,00	214,67	215,00	15,00	A	*180X215X15	S	32
180,00	219,67	220,00	15,00	A	*180X220X15	S	32
180,00	219,67	220,00	16,00	A	*180X220X16	S	32
185,00	209,67	210,00	15,00	A	*185X210X15	S	32
185,00	210,00	210,35	13,00	A	185X210X13	S	35
185,00	215,00	215,22	16,00	A	*185X215X16	S	32
190,00	209,67	210,00	10,00	A	*190X210X10	S	32
190,00	209,67	210,00	15,00	A	*190X210X15	S	32
190,00	220,00	220,35	15,00	A	*190X220X15	S	32
190,00	220,00	220,35	16,00	A	*231905	S	35
190,00	220,00	220,35	16,00	A	190X220X16	S	35
190,00	224,67	225,00	12,00	A	*190X225X12	S	32
190,00	224,67	225,00	16,00	A	*190X225X16	S	32
190,00	225,00	225,20	16,00	A	*190X225X16V	V	32
190,00	229,67	230,00	15,00	A	*190X230X15	S	32
190,00	230,00	230,20	16,00	A	190X230X16	S	32
195,00	229,67	230,00	16,00	A	*195X230X16	S	32
195,00	229,67	230,00	20,00	A	*195X230X20	S	32
200,00	229,67	230,00	13,00	A	*200X230X13	S	32
200,00	230,00	230,20	15,00	A	*200X230X15V	V	32
200,00	230,00	230,35	15,00	A	200X230X15	S	45
200,00	234,67	235,00	15,00	A	*200X235X15	S	32
200,00	239,67	240,00	15,00	A	*200X240X15	S	32
200,00	239,67	240,00	20,00	A	*200X240X20	S	32
200,00	249,67	250,00	16,00	A	*200X250X16	S	32
200,00	249,67	250,00	20,00	A	*200X250X20	S	32
205,00	224,67	225,00	18,00	A	*205X225X18	S	32
205,00	234,67	235,00	18,00	A	*205X235X18	S	32
210,00	240,00	240,35	15,00	A	210X240X15	S	35
210,00	249,67	250,00	16,00	A	*210X250X16	S	32
210,00	250,00	250,20	15,00	A	210X250X15	S	32
210,00	269,67	270,00	16,00	A	*210X270X16	S	32
220,00	250,00	250,20	15,00	A	*220X250X15V	V	35
220,00	250,00	250,35	15,00	A	220X250X15	S	35
220,00	254,67	255,00	16,00	A	*220X255X16	S	32
220,00	259,67	260,00	14,00	A	*220X260X14	S	32
220,00	259,67	260,00	16,00	A	*220X260X16	S	32
220,00	260,00	260,20	15,00	A	*220X260X15	S	32
222,00	244,67	245,00	13,00	A	*222X245X13	S	32
230,00	260,00	260,35	15,00	A	230X260X15	S	35
233,00	272,00	272,26	15,88	A	*3689	V	#
240,00	270,00	270,35	15,00	A	240X270X15	S	35
240,00	270,00	270,35	16,00	A	*240X270X16	S	35
240,00	279,67	280,00	18,00	A	*240X280X18	S	32
240,00	279,67	280,00	20,00	A	*240X280X20	S	32
240,00	280,00	280,20	16,00	A	240X280X16	S	32
250,00	280,00	280,35	15,00	A	*250X280X15	S	35
250,00	289,67	290,00	15,00	A	*250X290X15	S	32
260,00	289,67	290,00	15,00	A	*260X290X15	S	32
260,00	300,00	300,45	20,00	A	*260X300X20	S	32
265,00	289,67	290,00	16,00	A	*265X290X16	S	32
270,00	310,00	310,45	16,00	A	*270X310X16	S	35
280,00	320,00	320,45	20,00	A	280X320X20	S	32
285,00	319,67	320,00	20,00	A	*285X320X20	S	32
290,00	329,67	330,00	18,00	A	*290X330X18	S	32
300,00	340,00	340,45	20,00	A	300X340X20	S	32
320,00	360,00	360,45	20,00	A	*320X360X20	S	32
340,00	380,00	380,45	20,00	A	*340X380X20	S	32
360,00	400,00	400,45	20,00	A	*360X400X20	S	32
380,00	420,00	420,45	20,00	A	*380X420X20	S	32
400,00	440,00	440,45	20,00	A	*400X440X20	S	32

For Illustration and Material Data See Technical Section
Designed For A Specific Application - Not Recommended For General Use
* The U.S. customer service number is 877-4-TIMKEN. The Canadian customer service numbers are 800-565-4927 (English) and 800-565-0438 (French-Canadian).

Width	ID	OD	Packaged Part No.	Std. Unit Pack	Bulk Part No.	Std. Bulk Pack
1/32"	1/32"	3/32"	**001PKG**	5	001BULK	500
3/64"	3/64"	9/64"	**002PKG**	10	002BULK	500
1/16"	1/16"	3/16"	**003PKG**	5	003BULK	500
1/16"	5/64"	13/16"	**004PKG**	5	004BULK	500
1/16"	3/32"	7/32"	**005PKG**	5	005BULK	500
1/16"	1/8"	1/4"	**006PKG**	20	006BULK	500
1/16"	1/8"	1/4"	**006V35***	10	NA	NA
1/16"	5/32"	9/32"	**007PKG**	20	007BULK	500
1/16"	5/32"	9/32"	**007V35***	10	NA	NA
1/16"	3/16"	5/16"	**008PKG**	20	008BULK	500
1/16"	3/16"	5/16"	**008V35***	10	NA	NA
1/16"	7/32"	11/32"	**009PKG**	20	009BULK	500
1/16"	7/32"	11/32"	**009V35***	10	NA	NA
1/16"	1/4"	3/8"	**010PKG**	20	010BULK	500
1/16"	1/4"	3/8"	**010V35***	10	NA	NA
1/16"	5/16"	7/16"	**011PKG**	20	011BULK	500
1/16"	5/16"	7/16"	**011V35***	10	NA	NA
1/16"	3/8"	1/2"	**012PKG**	20	012BULK	500
1/16"	3/8"	1/2"	**012V35***	10	NA	NA
1/16"	7/16"	9/16"	**013PKG**	10	013BULK	250
1/16"	1/2"	5/8"	**014PKG**	10	014BULK	250
1/16"	9/16"	11/16"	**015PKG**	10	015BULK	250
1/16"	5/8"	3/4"	**016PKG**	10	016BULK	250
1/16"	11/16"	13/16"	**017PKG**	10	017BULK	250
1/16"	3/4"	7/8"	**018PKG**	10	018BULK	250
1/16"	13/16"	15/16"	**019PKG**	10	019BULK	250
1/16"	7/8"	1"	**020PKG**	10	020BULK	250
1/16"	15/16"	1 1/16"	**021PKG**	10	021BULK	250
1/16"	1"	1 1/8"	**022PKG**	10	022BULK	250
1/16"	1 1/16"	1 3/16"	**023PKG**	10	023BULK	250
1/16"	1 1/8"	1 1/4"	**024PKG**	10	024BULK	250
1/16"	1 3/16"	1 5/16"	**025PKG**	10	025BULK	250
1/16"	1 1/4"	1 3/8"	**026PKG**	10	026BULK	250
1/16"	1 5/16"	1 7/16"	**027PKG**	10	027BULK	250
1/16"	1 3/8"	1 1/2"	**028PKG**	10	028BULK	250
1/16"	1 1/2"	1 5/8"	**029PKG**	5	029BULK	100
1/16"	1 5/8"	1 3/4"	**030PKG**	5	030BULK	100
1/16"	1 3/4"	1 7/8"	**031PKG**	5	031BULK	100
1/16"	1 7/8"	2"	**032PKG**	5	032BULK	100
1/16"	2"	2 1/8"	**033PKG**	5	033BULK	100
1/16"	2 1/8"	2 1/4"	**034PKG**	5	034BULK	100
1/16"	2 1/4"	2 3/8"	**035PKG**	5	035BULK	100
1/16"	2 3/8"	2 1/2"	**036PKG**	5	036BULK	100
1/16"	2 1/2"	2 5/8"	**037PKG**	5	037BULK	100
1/16"	2 5/8"	2 3/4"	**038PKG**	5	038BULK	50
1/16"	2 3/4"	2 7/8"	**039PKG**	5	039BULK	50
1/16"	2 7/8"	3"	**040PKG**	5	040BULK	50
1/16"	3"	3 1/8"	**041PKG**	5	041BULK	50
1/16"	3 1/4"	3 3/8"	**042PKG**	5	042BULK	50
1/16"	3 1/2"	3 5/8"	**043PKG**	5	043BULK	50
1/16"	3 3/4"	3 7/8"	**044PKG**	5	044BULK	50
1/16"	4"	4 1/8"	**045PKG**	5	045BULK	50
3/32"	3/8"	9/16"	**110PKG**	20	110BULK	500
3/32"	3/8"	9/16"	**110V35***	10	NA	NA
3/32"	7/16"	5/8"	**111PKG**	20	111BULK	500
3/32"	7/16"	5/8"	**111V35***	10	NA	NA
3/32"	1/2"	11/16"	**112PKG**	20	112BULK	500
3/32"	1/2"	11/16"	**112V35***	10	NA	NA
3/32"	9/16"	3/4"	**113PKG**	10	113BULK	500
3/32"	9/16"	3/4"	**113V35***	10	NA	NA
3/32"	5/8"	13/16	**114PKG**	10	114BULK	500
3/32"	5/8"	13/16"	**114V35***	10	NA	NA
3/32"	11/16"	7/8"	**115PKG**	10	115BULK	500
3/32"	11/16"	7/8"	**115V35***	5	NA	NA
3/32"	3/4"	15/16"	**116PKG**	10	116BULK	500
3/32"	3/4"	15/16"	**116V35***	5	NA	NA
3/32"	13/16"	1"	**117PKG**	10	117BULK	250
3/32"	7/8"	1 1/16"	**118PKG**	10	118BULK	250
3/32"	15/16"	1 1/8"	**119PKG**	10	119BULK	250
3/32"	1"	1 3/16"	**120PKG**	10	120BULK	250
3/32"	1 1/16"	1 1/4"	**121PKG**	10	121BULK	250
3/32"	1 1/8"	1 5/16"	**122PKG**	10	122BULK	250
3/32"	1 3/16"	1 3/8"	**123PKG**	10	123BULK	250
3/32"	1 1/4"	1 7/16"	**124PKG**	10	124BULK	250
3/32"	1 5/16"	1 1/2"	**125PKG**	10	125BULK	250
3/32"	1 3/8"	1 9/16"	**126PKG**	5	126BULK	250
3/32"	1 7/16"	1 5/8"	**127PKG**	5	127BULK	250
3/32"	1 1/2"	1 11/16"	**128PKG**	5	128BULK	250
3/32"	1 9/16"	1 3/4"	**129PKG**	5	129BULK	250
3/32"	1 5/8"	1 13/16"	**130PKG**	5	130BULK	100
3/32"	1 11/16"	1 7/8"	**131PKG**	5	131BULK	100
3/32"	1 3/4"	1 15/16"	**132PKG**	5	132BULK	100
3/32"	1 13/16"	2"	**133PKG**	5	133BULK	100
3/32"	1 7/8"	2 1/16"	**134PKG**	5	134BULK	100
3/32"	1 15/16"	2 1/8"	**135PKG**	5	135BULK	100
3/32"	2"	2 3/16"	**136PKG**	5	136BULK	100
3/32"	2 1/16"	2 1/4"	**137PKG**	5	137BULK	100
3/32"	2 1/8"	2 5/16"	**138PKG**	5	138BULK	100
3/32"	2 3/16"	2 3/8"	**139PKG**	5	139BULK	100
3/32"	2 1/4"	2 7/16"	**140PKG**	5	140BULK	100
3/32"	2 5/16"	2 1/2"	**141PKG**	5	141BULK	100
3/32"	2 3/8"	2 9/16"	**142PKG**	5	142BULK	100
3/32"	2 7/16"	2 5/8"	**143PKG**	5	143BULK	100
3/32"	2 1/2"	2 11/16"	**144PKG**	5	144BULK	100
3/32"	2 9/16"	2 3/4"	**145PKG**	5	145BULK	100
3/32"	2 5/8"	2 13/16"	**146PKG**	5	146BULK	100
3/32"	2 11/16"	2 7/8"	**147PKG**	5	147BULK	100
3/32"	2 3/4"	2 5/16"	**148PKG**	5	148BULK	100
3/32"	2 13/16"	3"	**149PKG**	5	149BULK	100
3/32"	2 7/8"	3 1/16"	**150PKG**	5	150BULK	100
3/32"	3"	3 3/16"	**151PKG**	5	151BULK	100
3/32"	3 1/4"	3 7/16"	**152PKG**	5	152BULK	100
3/32"	3 1/2"	3 11/16"	**153PKG**	5	153BULK	100
3/32"	3 3/4"	3 15/16"	**154PKG**	5	154BULK	100
3/32"	4"	4 3/16"	**155PKG**	5	155BULK	50
3/32"	3/4"	1"	**210PKG**	10	210BULK	250
1/8"	3/4"	1"	**210V35***	5	NA	NA
1/8"	13/16"	1 1/16"	**211PKG**	10	211BULK	250
1/8"	13/16"	1 1/16"	**211V35***	5	NA	NA
1/8"	7/8"	1 1/8"	**212PKG**	10	212BULK	250
1/8"	7/8"	1 1/8"	**212V35***	5	NA	NA
1/8"	15/16"	1 3/16"	**213PKG**	10	213BULK	250
1/8"	15/16"	1 3/16"	**213V35***	5	NA	NA
1/8"	1"	1 1/4"	**214PKG**	10	214BULK	250
1/8"	1"	1 1/4"	**214V35***	5	NA	NA
1/8"	1 1/16"	1 5/16"	**215PKG**	10	215BULK	250
1/8"	1 1/16"	1 5/16"	**215V35***	5	NA	NA
1/8"	1 1/8"	1 3/8"	**216PKG**	10	216BULK	250
1/8"	1 1/8"	1 3/8"	**216V35***	2	NA	NA
1/8"	1 3/16"	1 7/16"	**217PKG**	10	217BULK	250
1/8"	1 3/16"	1 7/16"	**217V35***	2	NA	NA
1/8"	1 1/4"	1 1/2"	**218PKG**	10	218BULK	250
1/8"	1 1/4"	1 1/2"	**218V35***	2	NA	NA
1/8"	1 5/16"	1 9/16"	**219PKG**	10	219BULK	250
1/8"	1 5/16"	1 9/16"	**219V35***	2	NA	NA
1/8"	1 3/8"	1 5/8"	**220PKG**	10	220BULK	250
1/8"	1 3/8"	1 5/8"	**220V35***	2	NA	NA
1/8"	1 7/16"	1 11/16"	**221PKG**	10	221BULK	250
1/8"	1 7/16"	1 11/16"	**221V35***	2	NA	NA
1/8"	1 1/2"	1 3/4"	**222PKG**	10	222BULK	250
1/8"	1 1/2"	1 3/4"	**222V35***	2	NA	NA
1/8"	1 5/8"	1 7/8"	**223PKG**	10	223BULK	250
1/8"	1 3/4"	2"	**224PKG**	10	224BULK	250
1/8"	7/8"	2 1/8"	**225PKG**	10	225BULK	250

* Fluoroelastomer

Width	ID	OD	Packaged Part No.	Std. Unit Pack	Bulk Part No.	Std. Bulk Pack
1/8"	2"	2 1/4"	**226PKG**	10	226BULK	250
1/8"	2 1/8"	2 3/8"	**227PKG**	10	227BULK	250
1/8"	2 1/4"	2 1/2"	**228PKG**	10	228BULK	250
1/8"	2 3/8"	2 5/8"	**229PKG**	10	229BULK	250
1/8"	2 1/2"	2 3/4"	**230PKG**	10	230BULK	250
1/8"	2 5/8"	2 7/8"	**231PKG**	10	231BULK	250
1/8"	2 3/4"	3	**232PKG**	10	232BULK	250
1/8"	2 7/8"	3 1/4"	**234PKG**	10	234BULK	250
1/8"	3 1/8"	3 3/8"	**235PKG**	10	235BULK	250
1/8"	3 1/4"	3 1/2"	**236PKG**	10	236BULK	100
1/8"	3 3/8"	3 5/8"	**237PKG**	10	237BULK	100
1/8"	3 1/2"	3 3/4"	**238PKG**	10	238BULK	100
1/8"	3 5/8"	3 7/8"	**239PKG**	10	239BULK	100
1/8"	3 3/4"	4"	**240PKG**	10	240BULK	100
1/8"	3 7/8"	4 1/8"	**241PKG**	10	241BULK	100
1/8"	4	4 1/4"	**242PKG**	10	242BULK	100
1/8"	4 1/8"	4 3/8"	**243PKG**	10	243BULK	100
1/8"	4 1/4"	4 1/2"	**244PKG**	10	244BULK	100
1/8"	4 3/8"	4 5/8"	**245PKG**	10	245BULK	100
1/8"	4 1/2"	4 3/4"	**246PKG**	5	246BULK	100
1/8"	4 5/8"	4 7/8"	**247PKG**	5	247BULK	100
1/8"	4 3/4"	5	**248PKG**	5	248BULK	50
1/8"	4 7/8"	5 1/8"	**249PKG**	5	249BULK	50
1/8"	5	5 1/4"	**250PKG**	5	250BULK	50
1/8"	5 1/8"	5 3/8"	**251PKG**	5	251BULK	50
1/8"	5 1/4"	5 1/2"	**252PKG**	5	252BULK	50
1/8"	5 3/8"	5 5/8"	**253PKG**	5	253BULK	50
1/8"	5 1/2"	5 3/4"	**254PKG**	5	254BULK	50
1/8"	5 5/8"	5 7/8"	**255PKG**	5	255BULK	50
1/8"	5 3/4"	6	**256PKG**	5	256BULK	50
1/8"	5 7/8"	6 1/8"	**257PKG**	5	257BULK	10
1/8"	6	6 1/4"	**258PKG**	5	258BULK	10
1/8"	6 1/4"	6 1/2"	**259PKG**	5	259BULK	10
1/8"	6 1/2"	6 3/4"	**260PKG**	5	260BULK	10
1/8"	6 3/4"	7	**261PKG**	5	261BULK	10
1/8"	7	7 1/4"	**262PKG**	5	262BULK	10
1/8"	7 1/4"	7 1/2"	**263PKG**	5	263BULK	10
1/8"	7 1/2"	7 3/4"	**264PKG**	5	264BULK	10
1/8"	7 3/4"	8	**265PKG**	5	265BULK	10
1/8"	8	8 1/4"	**266PKG**	5	266BULK	10
1/8"	8 1/4"	8 1/2"	**267PKG**	5	267BULK	10
1/8"	8 1/2"	8 3/4"	**268PKG**	5	268BULK	10
1/8"	8 3/4"	9	**269PKG**	5	269BULK	10
1/8"	9	9 1/4"	**270PKG**	5	270BULK	10
1/8"	9 1/4"	9 1/2"	**271PKG**	5	271BULK	10
1/8"	9 1/2"	9 3/4"	**272PKG**	5	272BULK	10
1/8"	9 3/4"	10	**273PKG**	5	273BULK	10
1/8"	10	10 1/4"	**274PKG**	5	274BULK	10
3/16"	1 1/2"	1 7/8"	**325PKG**	5	325BULK	100
3/16"	1 1/2"	1 7/8"	**325V35***	2	NA	NA
3/16"	1 5/8"	2"	**326PKG**	5	326BULK	100
3/16"	1 5/8"	2"	**326V35***	2	NA	NA
3/16"	1 3/4"	2 1/8"	**327PKG**	5	327BULK	100
3/16"	1 3/4"	2 1/8"	**327V35***	2	NA	NA
3/16"	1 7/8"	2 1/4"	**328PKG**	5	328BULK	100
3/16"	2"	2 3/8"	**329PKG**	5	329BULK	100
3/16"	2 1/8"	2 1/2"	**330PKG**	5	330BULK	100
3/16"	2 1/4"	2 5/8"	**331PKG**	5	331BULK	100
3/16"	2 3/8"	2 3/4"	**332PKG**	5	332BULK	100
3/16"	2 1/2"	2 7/8"	**333PKG**	5	333BULK	100
3/16"	2 5/8"	3	**334PKG**	5	334BULK	100
3/16"	2 3/4"	3 1/8"	**335PKG**	5	335BULK	100
3/16"	2 7/8"	3 1/4"	**336PKG**	5	336BULK	100
3/16"	3	3 3/8"	**337PKG**	5	337BULK	100
3/16"	3 1/8"	3 1/2"	**338PKG**	5	338BULK	50
3/16"	3 1/4"	3 5/8"	**339PKG**	5	339BULK	50
3/16"	3 3/8"	3 3/4"	**340PKG**	5	340BULK	50
3/16"	3 1/2"	3 7/8"	**341PKG**	5	341BULK	50
3/16"	3 5/8"	4	**342PKG**	5	342BULK	50
3/16"	3 3/4"	4 1/8"	**343PKG**	5	343BULK	50
3/16"	3 7/8"	4 1/4"	**344PKG**	5	344BULK	50
3/16"	4	4 3/8"	**345PKG**	5	345BULK	50
3/16"	4 1/8"	4 1/2"	**346PKG**	5	346BULK	50
3/16"	4 1/4"	4 5/8"	**347PKG**	5	347BULK	50
3/16"	4 3/8"	4 3/4"	**348PKG**	2	348BULK	50
3/16"	4 1/2"	4 7/8"	**349PKG**	2	349BULK	50
3/16"	5 1/2"	5 7/8"	**357PKG**	2	357BULK	10
1/4"	4 1/2"	5	**425PKG**	2	425BULK	25
1/4"	4 5/8"	5 1/8"	**426PKG**	2	426BULK	25
1/4"	4 3/4"	5 1/4"	**427PKG**	2	427BULK	25
1/4"	4 7/8"	5 3/8"	**428PKG**	2	428BULK	25
1/4"	5"	5 1/2"	**429PKG**	2	492BULK	25
1/4"	5 1/8"	5 5/8"	**430PKG**	2	430BULK	25
1/4"	5 1/4"	5 3/4"	**431PKG**	2	431BULK	25
1/4"	5 3/8"	5 7/8"	**432PKG**	2	432BULK	25
1/4"	5 1/2"	6"	**433PKG**	2	433BULK	25
1/4"	5 5/8"	6 1/8"	**434PKG**	2	434BULK	10
1/4"	5 3/4"	6 1/4"	**435PKG**	2	435BULK	10
1/4"	5 7/8"	6 3/8"	**436PKG**	2	436BULK	10
1/4"	6	6 1/2"	**437PKG**	2	437BULK	10
1/4"	6 1/4"	6 3/4"	**438PKG**	2	438BULK	10
1/4"	6 1/2"	7	**439PKG**	2	439BULK	10
1/4"	6 3/4"	7 1/4"	**440PKG**	2	440BULK	10
1/4"	7	7 1/2"	**441PKG**	2	441BULK	10
1/4"	7 1/4"	7 3/4"	**442PKG**	2	442BULK	10
1/4"	7 1/2"	8"	**443PKG**	2	443BULK	10
1/4"	7 3/4"	8 1/4"	**444PKG**	2	444BULK	10
1/4"	8	8 1/2"	**445PKG**	2	445BULK	10
1/4"	8 1/2"	9"	**446PKG**	2	446BULK	10
1/4"	9"	9 1/2"	**447PKG**	2	447BULK	10
1/4"	9 1/2"	10"	**448PKG**	2	448BULK	10
1/4"	10"	10 1/2"	**449PKG**	1	449BULK	10
1/4"	10 1/2"	11"	**450PKG**	1	450BULK	10
1/4"	11"	11 1/2"	**451PKG**	1	451BULK	10
1/4"	11 1/2"	12"	**452PKG**	1	452BULK	10
1/4"	12"	12 1/2"	**453PKG**	1	453BULK	10
1/4"	12 1/2"	13"	**454PKG**	1	454BULK	10
1/4"	13"	13 1/2"	**455PKG**	1	455BULK	10
1/4"	13 1/2"	14"	**456PKG**	1	456BULK	10
1/4"	14"	14 1/2"	**457PKG**	1	457BULK	10
1/4"	14 1/2"	15"	**458PKG**	1	458BULK	10
1/4"	15"	15 1/2"	**459PKG**	1	459BULK	10
1/4"	15 1/2"	16"	**460PKG**	1	460BULK	10

* Fluoroelastomer

OK 311

Designed for emergency maintenance, this kit reduces downtime to a minimum by providing quick and easy selection of the proper replacement O-rings. O-rings in this kit are all nitrile (BUNA-N) rubber and in popular inch dimensions from ¼" O.D. to 2 ⅛" O.D. in thirty sizes

Kit Part	I.D.	O.D.	Width	Pcs.	Refill
006	⅛"	¼"	1/16"	20	006PKG
007	5/32"	9/32"	1/16"	20	007PKG
008	3/16"	5/16"	1/16"	20	008PKG
009	7/32"	11/32"	1/16"	20	009PKG
010	¼"	⅜"	1/16"	20	010PKG
011	5/16"	7/16"	1/16"	20	011PKG
012	⅜"	½"	1/16"	20	012PKG
110	⅜"	9/16"	3/32"	13	110PKG
111	7/16"	⅝"	3/32"	13	111PKG
112	½"	11/16"	3/32"	13	112PKG
113	9/16"	¾"	3/32"	13	113PKG
114	⅝"	13/16"	3/32"	13	114PKG
115	11/16"	⅞"	3/32"	13	115PKG
116	¾"	15/16"	3/32"	13	116PKG
210	¾"	1"	⅛"	10	210PKG
211	13/16"	1 1/16"	⅛"	10	211PKG
212	⅞"	1 ⅛"	⅛"	10	212PKG
213	15/16"	1 3/16"	⅛"	10	213PKG
214	1"	1 ¼"	⅛"	10	214PKG
215	1 1/16"	1 5/16"	⅛"	10	215PKG
216	1 ⅛"	1 ⅜"	⅛"	10	216PKG
217	1 3/16"	1 7/16"	⅛"	10	217PKG
218	1 ¼"	1 ½"	⅛"	10	218PKG
219	1 5/16"	1 9/16"	⅛"	10	219PKG
220	1 ⅜"	1 ⅝"	⅛"	10	220PKG
221	1 7/16"	1 11/16"	⅛"	10	221PKG
222	1 ½"	1 ¾"	⅛"	10	222PKG
325	1 ½"	1 ⅞"	3/16"	7	325PKG
326	1 ⅝"	2"	3/16"	7	326PKG
327	1 ¾"	2 ⅛"	3/16"	7	327PKG

OK 312

For metric applications, you will never have to guess which O-rings to use again. The OK-312 metric O-ring kit gives you 30 sizes of metric O-rings, from 7mm O.D. to 52mm O.D., made from nitrile rubber. This kit allows you to have the correct O-ring for your metric application

Kit Part	I.D.	O.D.	Width	Pcs.	Refill
6003020	3 mm	7 mm	2 mm	16	6003020
6004020	4 mm	8 mm	2 mm	16	6004020
6005020	5 mm	9 mm	2 mm	16	6005020
6006020	6 mm	10 mm	2 mm	16	6006020
6007020	7 mm	11 mm	2 mm	16	6007020
6008020	8 mm	12 mm	2 mm	16	6008020
6010020	10 mm	14 mm	2 mm	16	6010020
6010025	10 mm	15 mm	2.5 mm	13	6010025
6011025	11 mm	16 mm	2.5 mm	13	6011025
6012025	12 mm	17 mm	2.5 mm	13	6012025
6014025	14 mm	19 mm	2.5 mm	13	6014025
6016025	16 mm	21 mm	2.5 mm	13	6016025
6017025	17 mm	22 mm	2.5 mm	13	6017025
6019025	19 mm	24 mm	2.5 mm	13	6019025
6019030	19 mm	25 mm	3 mm	12	6019030
6020030	20 mm	26 mm	3 mm	12	6020030
6022030	22 mm	28 mm	3 mm	12	6022030
6024030	24 mm	30 mm	3 mm	12	6024030
6025030	25 mm	31 mm	3 mm	12	6025030
6027030	27 mm	33 mm	3 mm	12	6027030
6028030	28 mm	34 mm	3 mm	12	6028030
6030030	30 mm	36 mm	3 mm	12	6030030
6032030	32 mm	38 mm	3 mm	12	6032030
6033030	33 mm	39 mm	3 mm	12	6033030
6035030	35 mm	41 mm	3 mm	12	6035030
6036030	36 mm	42 mm	3 mm	12	6036030
6038030	38 mm	44 mm	3 mm	11	6038030
6038040	38 mm	46 mm	4 mm	9	6038040
6041040	41 mm	49 mm	4 mm	9	6041040
6044040	44 mm	52 mm	4 mm	9	6044040

OK 411

Designed for use in higher temperatures or particularly punishing applications, the O-rings in this kit are made from a super-durable fluroelastomer. The kit provides O-rings in 30 popular sizes, in inch dimensions from ¼" O.D. to 2 ⅛" O.D.

Kit Part	I.D.	O.D.	Width	Pcs.	Refill
006V35	⅛"	¼"	1/16"	10	006V35
007V35	5/32"	9/32"	1/16"	10	007V35
008V35	3/16"	5/16"	1/16"	10	008V35
009V35	7/32"	11/32"	1/16"	10	009V35
010V35	¼"	⅜"	1/16"	10	010V35
011V35	5/16"	7/16"	1/16"	10	011V35
012V35	⅜"	½"	1/16"	10	012V35
110V35	⅜"	9/16"	3/32"	10	110V35
111V35	7/16"	⅝"	3/32"	10	111V35
112V35	½"	11/16"	3/32"	10	112V35
113V35	9/16"	¾"	3/32"	10	113V35
114V35	⅝"	13/16"	3/32"	10	114V35
115V35	11/16"	⅞"	3/32"	5	115V35
116V35	¾"	15/16"	3/32"	5	116V35
210V35	¾"	1"	⅛"	5	210V35
211V35	13/16"	1 1/16"	⅛"	5	211V35
212V35	⅞"	1 ⅛"	⅛"	5	212V35
213V35	15/16"	1 3/16"	⅛"	5	213V35
214V35	1"	1 ¼"	⅛"	5	214V35
215V35	1 1/16"	1 5/16"	⅛"	5	215V35
216V35	1 ⅛"	1 ⅜"	⅛"	2	216V35
217V35	1 3/16"	1 7/16"	⅛"	2	217V35
218V35	1 ¼"	1 ½"	⅛"	2	218V35
219V35	1 5/16"	1 9/16"	⅛"	2	219V35
220V35	1 ⅜"	1 ⅝"	⅛"	2	220V35
221V35	1 7/16"	1 11/16"	⅛"	2	221V35
222V35	1 ½"	1 ¾"	⅛"	2	222V35
325V35	1 ½"	1 ⅞"	3/16"	2	325V35
326V35	1 ⅝"	2"	3/16"	2	326V35
327V35	1 ¾"	2 ⅛"	3/16"	2	327V35

* O-Ring Gage (MD-999) sold separately. Individual O-Rings can be purchased separately

Mfr. No.	Name	Zero Duplication or Recommended Industrial
A-1205-A-1925	ROCKW	**417484**
A-1205-A-1925	ROCKW	4874N
A-1205-B-1926	ROCKW	100494
A-1205-B-1926	ROCKW	**476470**
A-1205-D-1925	ROCKW	**415082**
A-1205-D-1928	ROCKW	**415082**
A-1205-D-2422	ROCKW	**415150** =
A-1205-D-2500	ROCKW	100495
A-1205-D-2578	ROCKW	370048A
A-1205-D-2578	ROCKW	380048A
A-1205-E-2501	ROCKW	100141
A-1205-F-2424	ROCKW	100495
A-1205-F-2424	ROCKW	4810V !
A-1205-F-2502	ROCKW	100263
A-1205-G-2425	ROCKW	100263
A-1205-G-2425	ROCKW	4561V
A-1205-G-2555	ROCKW	100355
A-1205-H-2426	ROCKW	100263
A-1205-H-2426	ROCKW	4562V
A-1205-H-2556	ROCKW	100557
A-1205-J-2428	ROCKW	100494
A-1205-J-2428	ROCKW	**476470**
A-1205-J-2558	ROCKW	100263
A-1205-J-2558	ROCKW	100373
A-1205-K-2013	ROCKW	**417507**
A-1205-K-2429	ROCKW	100557
A-1205-K-2429	ROCKW	4544V
A-1205-K-2559	ROCKW	100406
A-1205-K-2559	ROCKW	100495
A-1205-L-2428	ROCKW	100494
A-1205-L-2428	ROCKW	**476470**
A-1205-L-2430	ROCKW	100495
A-1205-L-2430	ROCKW	714810
A-1205-N-2588	ROCKW	100263
A-1205-N-2588	ROCKW	4562V
A-1205-P-2486	ROCKW	907155
A-1205-P-2538	ROCKW	100557
A-1205-Q-2591	ROCKW	100557
A-1205-Q-2591	ROCKW	4544V
A-1205-R-2592	ROCKW	100494
A-1205-R-2592	ROCKW	**476470**
A-1205-S-2255	ROCKW	100495
A-1205-S-2281	ROCKW	**417484**
A-1205-U-1934	ROCKW	4564V
A-1205-U-1945	ROCKW	100557
A-1205-U-1945	ROCKW	4544V
A-1205-U-2257	ROCKW	100263
A-1205-U-2257	ROCKW	4562V
A-1205-U-2335	ROCKW	100495
A-1205-U-2335	ROCKW	714810
A-1205-W-1895	ROCKW	100495
A-1205-W-1895	ROCKW	476023N
A-1205-W-1895	ROCKW	4810V !
A-1205-Y-1897	ROCKW	100263
A-1205-Y-1897	ROCKW	3905
A-1205-Y-1897	ROCKW	4562V
A-65277	TROS	370030A
A020571	FED	6971S =
A0383	CATER	**473442** !
A10062	CASE	**415960**
A10096	CASE	**472015** !
A10132A	CUSH	340930
A102	TROS	HU012A
A10260	CASE	**471466** !
A1026J	EATON	**450084** !
A104255	CONCA	**471649** !
A104255	CONTI	**471649** !
A106737R91	IH	**474278**
A109155	OLIVE	**472560N**
A109155	WHITE	**472560N**
A11120	CASE	**471141** !
A11151	JOHND	**412920** !
A112603	OLIVE	**471554** !
A11332	CASE	**476470**
A113763	OLIVE	**471835** !
A11507	CASE	**471267** !
A115551	OLIVE	470059
A115551	OLIVE	**470380** !
A115775	OLIVE	**471192**
A115792	OLIVE	**471765** !
A11592	CASE	**417158** !
A116110	OLIVE	**471391** !
A11774	CUSH	240414
A11788	WHITE	**411245** !
A11805S-149	ROCKW	3591
A119488	US-EL	**472258** !
A1199R-668	ROCKW	**411253** !
A1205-E-631	ROCKW	6638S
A1205-L-2482	ROCKW	**413469**
A1205A-1015	ROCKW	**413246**
A1205A-1015X	ROCKW	**413246**
A1205A-1033	ROCKW	476281N =
A1205A-1035	ROCKW	**472636** !
A1205A-1249	ROCKW	2505
A1205A-1535	ROCKW	**476470** !
A1205A-1535	ROCKW	**476470**
A1205A-157	ROCKW	**473367** !
A1205A-157	ROCKW	**473367**
A1205A-1665X	ROCKW	**415551**
A1205A-183	ROCKW	**418028**
A1205A-183	ROCKW	455137 !
A1205A-1873	ROCKW	**417602** =
A1205A-2107	ROCKW	45013S
A1205A-287	ROCKW	**473228** !
A1205A-339	ROCKW	**417196** !
A1205A-391	ROCKW	**417621** !
A1205A-651	ROCKW	452086
A1205A-804	ROCKW	**472636** !
A1205A-937	ROCKW	370037A
A1205A-937	ROCKW	370338A
A1205A-989	ROCKW	**416891** !
A1205A-989X	ROCKW	**416891** !
A1205B-1016	ROCKW	456641
A1205B-1198	ROCKW	**412119**
A1205B-1224	ROCKW	**413246**
A1205B-1314	ROCKW	370077A * =
A1205B-1328	ROCKW	3136N
A1205B-1718	ROCKW	**450523**
A1205B-1796X	ROCKW	370166A *
A1205B-184	ROCKW	**471821** !
A1205B-210	ROCKW	**415458** !
A1205B-2108	ROCKW	40101S
A1205B-288	ROCKW	**416294** !
A1205B-366	ROCKW	**471271** !
A1205B-574	ROCKW	370008A
A1205B-574	ROCKW	6270
A1205B-626	ROCKW	**410987** !
A1205B-678	ROCKW	**415007**
A1205B-834X	ROCKW	55469
A1205B2264	ROCKW	370001A
A1205C-1069	ROCKW	**473240** !
A1205C-1355	ROCKW	**473215** *
A1205C-1381	ROCKW	370054A
A1205C-159	ROCKW	**410102**
A1205C-1719	ROCKW	370011A
A1205C-1875	ROCKW	370036A
A1205C-1875	ROCKW	370349A
A1205C-211	ROCKW	**417159**
A1205C-367	ROCKW	**411253** !
A1205C-653	ROCKW	415060
A1205C-653	ROCKW	455060
A1205C-757	ROCKW	**472016**
A1205C1927	ROCKW	**415995**
A1205D-1018	ROCKW	**416888**
A1205D-1070	ROCKW	370048A
A1205D-1070	ROCKW	380048A
A1205D-1148	ROCKW	416556 !
A1205D-1148	ROCKW	**472157**
A1205D-160	ROCKW	**470334** !
A1205D-1798	ROCKW	455612N * =
A1205D-1850	ROCKW	370037A
A1205D-1850	ROCKW	370338A
A1205D-212	ROCKW	**473231** !
A1205D-368	ROCKW	**471766** =
A1205D-394	ROCKW	**471224**
A1205D-420	ROCKW	**416070**
A1205D-446	ROCKW	**416288**
A1205D-602	ROCKW	**471103** !
A1205D-680	ROCKW	6612S
A1205D-758	ROCKW	**418028**
A1205D-836	ROCKW	370036A
A1205D-836	ROCKW	370349A
A1205D-992	ROCKW	**415351** !
A1205D2188	ROCKW	**417316** !
A1205D2526	ROCKW	370023A
A1205D2526	ROCKW	380023A
A1205E-1019	ROCKW	**417507** *
A1205E-1071	ROCKW	370001A
A1205E-1227	ROCKW	100495
A1205E-1227	ROCKW	476023N
A1205E-1253	ROCKW	**417506**
A1205E-135	ROCKW	**415001** !
A1205E-1513	ROCKW	**473238** !
A1205E-1591	ROCKW	253610
A1205E-161	ROCKW	**473367** !
A1205E-161	ROCKW	**473367**
A1205E-1851	ROCKW	370036A
A1205E-1851	ROCKW	370349A
A1205E-2163	ROCKW	**417507**
A1205E-317	ROCKW	**417316** !
A1205E-343	ROCKW	**476838** !
A1205E-603	ROCKW	**415036**
A1205E-707	ROCKW	5487
A1205E-837	ROCKW	**415437**
A1205E-837	ROCKW	**415437** !
A1205E-863X	ROCKW	**471391** !
A1205E-993	ROCKW	417522
A1205E-993X	ROCKW	417522
A1205E2186	ROCKW	**473490**
A1205E265	ROCKW	470059
A1205E265	ROCKW	**470380** !
A1205F-1043	ROCKW	**416888**
A1205F-136	ROCKW	40468
A1205F-1748	ROCKW	370030A
A1205F-362	ROCKW	**473446**
A1205F-370	ROCKW	5957S
A1205F-448	ROCKW	**416332** !
A1205F-682	ROCKW	**451078** !
A1205F-708	ROCKW	**417349**
A1205F-760	ROCKW	**471138** !
A1205F-838	ROCKW	370037A
A1205F-838	ROCKW	370338A
A1205F-88	ROCKW	**472179**
A1205F-969	ROCKW	417337N *
A1205F162	ROCKW	470059
A1205F162	ROCKW	**470380** !
A1205G-1047	ROCKW	**472439**
A1205G-1177	ROCKW	2704 =
A1205G-1723	ROCKW	**415196** !
A1205G-189	ROCKW	**415035**
A1205G-189	ROCKW	**415035** !
A1205G-293	ROCKW	**418028**
A1205G-293	ROCKW	455137 !
A1205G-397	ROCKW	**416654**
A1205G-423	ROCKW	**415041**
A1205G-605	ROCKW	40286
A1205G-631	ROCKW	370001A
A1205G-631	ROCKW	6638S
A1205G-633	ROCKW	**410308** !
A1205G-633	ROCKW	473468
A1205G-683	ROCKW	**410308**
A1205G-735	ROCKW	370046A
A1205G-735	ROCKW	**416297** !
A1205G-995	ROCKW	**417365** * =
A1205H-138	ROCKW	**472164** !
A1205H-2114	ROCKW	40337S
A1205H-398	ROCKW	55367 =
A1205H-736	ROCKW	**416297**
A1205H-762	ROCKW	370007A
A1205H-762	ROCKW	7866S
A1205H-918	ROCKW	40566S
A1205H840	ROCKW	**471224** !
A1205I-11061	ROCKW	370003A
A1205J-1102	ROCKW	**416107** !
A1205J-1102	ROCKW	455073
A1205J-1206	ROCKW	370007A
A1205J-1338	ROCKW	370093A * =
A1205J-1388X	ROCKW	370093A =
A1205J-1518	ROCKW	**415379**
A1205J-1544	ROCKW	**415082**
A1205J-166	ROCKW	**416288**
A1205J-2116	ROCKW	**415124**
A1205J-2272	ROCKW	370181A
A1205J-296	ROCKW	**415991**
A1205J-296	ROCKW	455146 !
A1205J-374	ROCKW	**471887**
A1205J-634	ROCKW	370030A
A1205J-712	ROCKW	**417211** !
A1205J-738	ROCKW	**455858**
A1205J-998X	ROCKW	**415458** !
A1205J1934	ROCKW	4564V
A1205J842	ROCKW	7512S =
A1205K-1285	ROCKW	370003A
A1205K-1337	ROCKW	**415991**
A1205K-1337	ROCKW	**415991** !
A1205K-141	ROCKW	**474265**
A1205K-167	ROCKW	**473215**
A1205K-1753	ROCKW	**472016**
A1205K-1779	ROCKW	**417484** !
A1205K-219	ROCKW	50560
A1205K-427	ROCKW	**473238** !
A1205K-453	ROCKW	6245S =
A1205K-531	ROCKW	**470625** !
A1205K-583	ROCKW	**471413**
A1205K-635	ROCKW	**410737** !
A1205K-687	ROCKW	5313 $
A1205K-713	ROCKW	3592
A1205K-739	ROCKW	**455858**
A1205K-937	ROCKW	370037A
A1205K-937	ROCKW	370338A
A1205K-999	ROCKW	386025A
A1205K-999	ROCKW	**416158**
A1205K401	ROCKW	**417316** !
A1205K401	ROCKW	**417316** =
A1205L-1338	ROCKW	370001A
A1205L-1390	ROCKW	**415294** !
A1205L-142	ROCKW	**473462**
A1205L-1598	ROCKW	386025A
A1205L-1598	ROCKW	**416158**
A1205L-1780	ROCKW	416961 =
A1205L-220	ROCKW	**472319**
A1205L-324	ROCKW	370036A
A1205L-324	ROCKW	370349A
A1205L-364	ROCKW	**416107** !
A1205L-364	ROCKW	455073
A1205L-415	ROCKW	**472636** !
A1205L-714	ROCKW	**416500**
A1205L-714	ROCKW	4563V

! Industrial Size/Type * Minor Width Difference $ F-M Number Is Part Of A Kit

= The U.S. customer service number is 877-4-TIMKEN. The Canadian customer service numbers are 800-565-4927 (English) and 800-565-0438 (French-Canadian).

Mfr. No.	Name	Zero Duplication or Recommended Industrial
A1205L-740	ROCKW	5487
A1205L-741	ROCKW	5487
A1205L-750	ROCKW	5487
A1205L-766	ROCKW	476574N
A1205L-922X	ROCKW	**481181**!
A1205L1546	ROCKW	370195A
A1205M-1287	ROCKW	370064A
A1205M-1625	ROCKW	**416888**
A1205M-1718	ROCKW	**450523**
A1205M-429	ROCKW	**415371**
A1205M-585	ROCKW	6612S
A1205M-611	ROCKW	5452
A1205M-715	ROCKW	**473243***=
A1205M-897	ROCKW	370036A
A1205M-897	ROCKW	370349A
A1205M-897	ROCKW	380036A
A1205M2197	ROCKW	**476514**
A1205M2198	ROCKW	**416500**!
A1205M325	ROCKW	415137
A1205M325	ROCKW	475137N=
A1205N-1132	ROCKW	**470954**!
A1205N-1288	ROCKW	370057A
A1205N-1314	ROCKW	370077A*=
A1205N-1392	ROCKW	370094A
A1205N-1496	ROCKW	**415995**!
A1205N-1548	ROCKW	**455019**!
A1205N-1574	ROCKW	**416077***=
A1205N-1614	ROCKW	370077A=
A1205N-1851	ROCKW	370036A
A1205N-1851	ROCKW	370349A
A1205N-300	ROCKW	**410694**!
A1205N-612	ROCKW	5406
A1205N-664	ROCKW	6663S
A1205N-742	ROCKW	**473458**!
A1205N-846	ROCKW	392077*=
A1205N-898	ROCKW	370037A
A1205N-898	ROCKW	370338A
A1205N-898X	ROCKW	370037A
A1205N-898X	ROCKW	370338A
A1205N1132S	ROCKW	**470954**!
A1205P-1004	ROCKW	370008A
A1205P-1212	ROCKW	**416158**
A1205P-1238	ROCKW	417053N*=
A1205P-1368	ROCKW	100494
A1205P-1368	ROCKW	**476470**!
A1205P-1446	ROCKW	416191
A1205P-1449	ROCKW	370001A
A1205P-146	KEN	**411253**!
A1205P-146	ROCKW	50631
A1205P-1466	ROCKW	416191
A1205P-1602	ROCKW	**471787**!
A1205P-1680	ROCKW	417359
A1205P-1758	ROCKW	**471224**!
A1205P-1888	ROCKW	376590A
A1205P-198	ROCKW	**473447**
A1205P-224	ROCKW	**415034**!
A1205P-2590	ROCKW	100495
A1205P-2590	ROCKW	4810V
A1205P-276	ROCKW	370046A
A1205P-276	ROCKW	5751
A1205P-302	ROCKW	**415066**
A1205P-328	ROCKW	**415001**!
A1205P-380	ROCKW	**471316**
A1205P-406	ROCKW	**416888**!
A1205P-614	ROCKW	5401
A1205P-666	ROCKW	**416167**!
A1205P-848	ROCKW	**470530**!
A1205P-900	ROCKW	**417247**!
A1205P1914	ROCKW	4876N
A1205P2226	ROCKW	386025A
A1205P2226	ROCKW	**416158**
A1205Q-1317	ROCKW	**417258**=
A1205Q-1395	ROCKW	3100
A1205Q-1525	ROCKW	**416364***=
A1205Q-1629	ROCKW	416556!
A1205Q-1629	ROCKW	**472157**
A1205Q-1655	ROCKW	**417484**!
A1205Q-1665	ROCKW	**417484**!
A1205Q-1759	ROCKW	452086
A1205Q-1915	ROCKW	3143N
A1205Q-1941	ROCKW	370119A*
A1205Q-225	ROCKW	**473449**
A1205Q-329	ROCKW	**417159**
A1205Q-407	ROCKW	**416892**
A1205Q-45	ROCKW	**412119**!
A1205Q-563	ROCKW	**470530**!
A1205Q-615	ROCKW	5403
A1205Q-849X	ROCKW	**471570**!
A1205Q-979X	ROCKW	**416706**=
A1205Q1447	ROCKW	**470954**
A1205Q173	ROCKW	**471795**
A1205Q2487	ROCKW	370003A
A1205Q723	ROCKW	**415995**!
A1205R-1	ROCKW	**416738**!
A1205R-1	ROCKW	450096
A1205R-1344	ROCKW	**416039**
A1205R-148	ROCKW	**416738**!
A1205R-148	ROCKW	450096
A1205R-1552	ROCKW	**415295**
A1205R-1604	ROCKW	**416271***=
A1205R-1630	ROCKW	370006A
A1205R-2124	ROCKW	370082A=
A1205R-226	ROCKW	**473444**
A1205R-330	ROCKW	**472636**!
A1205R-408	ROCKW	45031S
A1205R-564	ROCKW	**472179**
A1205R-590	ROCKW	8635S
A1205R-616	ROCKW	5405
A1205R-642	ROCKW	**415138**!
A1205R2488	ROCKW	100067
A1205S-1033	ROCKW	476281N=
A1205S-1111X	ROCKW	417364
A1205S-1319	ROCKW	**416339**
A1205S-1345	ROCKW	**472258**!
A1205S-1449	ROCKW	370001A
A1205S-149	ROCKW	**473228**
A1205S-1527	ROCKW	**455080***
A1205S-1631	ROCKW	370051A
A1205S-1657	ROCKW	**415072**
A1205S-617	ROCKW	5410
A1205S-669	ROCKW	**417134**
A1205S-695	ROCKW	**410308**!
A1205S-747	ROCKW	6864S
A1205S175	ROCKW	**471192**
A1205S2203	ROCKW	**417158**!
A1205S2489	ROCKW	386025A
A1205S2489	ROCKW	**416158**
A1205T-1086	ROCKW	**415035**
A1205T-124	ROCKW	**472636**!
A1205T-1242	ROCKW	**473467***=
A1205T-1252	ROCKW	**473467**
A1205T-1424	ROCKW	200919*=
A1205T-150	ROCKW	**413469**!
A1205T-1534	ROCKW	200870
A1205T-1580	ROCKW	**471271**!
A1205T-1710	ROCKW	**416229**
A1205T-1814	ROCKW	**416865**
A1205T-1944	ROCKW	2505V
A1205T-1996	ROCKW	6358
A1205T-228	ROCKW	**417316**!
A1205T-436	ROCKW	**416130**!
A1205T-50	ROCKW	**473228**
A1205T-634	ROCKW	6635S
A1205T-644	ROCKW	6245S=
A1205T-670	ROCKW	**416888**!
A1205T-696	ROCKW	370003A
A1205T-696	ROCKW	5481
A1205T-722	ROCKW	**455858**
A1205T-724	ROCKW	370120A
A1205T-748	ROCKW	6864S
A1205T-774	ROCKW	370120A
A1205T-800X	ROCKW	**415007**
A1205T1112	ROCKW	**471271**!
A1205T1112	ROCKW	471509=
A1205U-1061	ROCKW	370003A
A1205U-1243	ROCKW	**417278**
A1205U-1529	ROCKW	**416654**!
A1205U-1635	ROCKW	**472636**!
A1205U-1685	ROCKW	100263
A1205U-1685	ROCKW	3905
A1205U-229	ROCKW	**472150**
A1205U-297	ROCKW	7006S
A1205U-411	ROCKW	**411500**
A1205U-437	ROCKW	**417563**
A1205U-515	ROCKW	**412119**
A1205U-619	ROCKW	6649
A1205U-697	ROCKW	370006A
A1205U-723	ROCKW	**415995**!
A1205U-749	ROCKW	6864S
A1205V-1062	ROCKW	200958*=
A1205V-1192	ROCKW	**417507**
A1205V-126	ROCKW	**470625**!
A1205V-1374	ROCKW	**473274**
A1205V-1556	ROCKW	482415
A1205V-1634X	ROCKW	**417603**!
A1205V-1660	ROCKW	370057A
A1205V-230	ROCKW	**415027**
A1205V-230	ROCKW	**415027**!
A1205V-256	ROCKW	**417316**!
A1205V-386	ROCKW	**455151**
A1205V-542	ROCKW	370003A
A1205V-596	ROCKW	5408
A1205V-672	ROCKW	**415991**
A1205V-672	ROCKW	455146!
A1205V-723	ROCKW	**415995**!
A1205V-724	ROCKW	**415960**!
A1205V-802X	ROCKW	**470565**!
A1205V-958	ROCKW	**417484**!
A1205V2102	ROCKW	370054A
A1205V2492	ROCKW	370003A
A1205V2492	ROCKW	380003A
A1205W-1167X	ROCKW	**410496**!
A1205W-1193	ROCKW	**415196**!
A1205W-1245	ROCKW	370013A
A1205W-1345	ROCKW	370023A
A1205W-1349	ROCKW	370023A
A1205W-1375	ROCKW	370001A
A1205W-1557	ROCKW	370047A
A1205W-1687X	ROCKW	**416865**!
A1205W-283	ROCKW	6644
A1205W-309	ROCKW	**473450**
A1205W-647	ROCKW	**476470**!
A1205W-647	ROCKW	**476470**
A1205W1531X	ROCKW	**415294**=
A1205W1531X	ROCKW	**415294**!
A1205W2467	ROCKW	2867V=
A1205W829	ROCKW	**353120**
A1205X-1116	ROCKW	446927!
A1205X-128	ROCKW	**472924**!
A1205X-1298	ROCKW	**416865**
A1205X-1532	ROCKW	**455019**!
A1205X-1662	ROCKW	386025A
A1205X-1662	ROCKW	**416158**
A1205X-1688X	ROCKW	**415066**
A1205X-1690X	ROCKW	**417541**
A1205X-1792	ROCKW	6358
A1205X-180	ROCKW	50528
A1205X-1896	ROCKW	4561V
A1205X-258	ROCKW	**410496**!
A1205X-414	ROCKW	**471887**
A1205X-596	ROCKW	5408
A1205X-622	ROCKW	**417316**!
A1205X-752	ROCKW	6954S*
A1205X-804	ROCKW	**472636**
A1205X-960	ROCKW	**413246**
A1205X-960X	ROCKW	**413246**
A1205Y-1377	ROCKW	3143N
A1205Y-1533X	ROCKW	3292
A1205Y-1689X	ROCKW	**417278**
A1205Y-1715	ROCKW	370054A
A1205Y-1923	ROCKW	2297V!
A1205Y-1975	ROCKW	370065A
A1205Y-1975	ROCKW	376590A
A1205Y-2105	ROCKW	**415995**!
A1205Y-233	ROCKW	**450084**!
A1205Y-363	ROCKW	**416107**!
A1205Y-363	ROCKW	455073
A1205Y-415	ROCKW	**472636**!
A1205Y-571	KEN	**417596**
A1205Y-571	ROCKW	**417596**
A1205Y-727	ROCKW	**416654**
A1205Y-909	ROCKW	**472397***=
A1205Y-804	ROCKW	**416654***=
A1205Y1533	ROCKW	3292
A1205Z-1014	ROCKW	**417492**
A1205Z-1534	ROCKW	200870
A1205Z-156	ROCKW	**412119**!
A1205Z-1638X	ROCKW	**417491**
A1205Z-1716	ROCKW	370007A
A1205Z-182	ROCKW	**473245**!
A1205Z-1820	ROCKW	370120A
A1205Z-2106	ROCKW	**412119**!
A1205Z-2132	ROCKW	4591=
A1205Z-286	ROCKW	**481443**!
A1205Z-338	ROCKW	**450084**!
A1205Z-364	ROCKW	**417507**!
A1205Z-884	ROCKW	416289N=
A1205Z-910	ROCKW	**415995**!
A1205Z-962X	ROCKW	**471887**=
A1208	HWY	**415449**!
A12536	WHITE	**411253**!
A125Y1533	ROCKW	3292
A12929	CASE	**472439**
A12931	CASE	**417967**!
A12994	CASE	**473238**
A12996	CASE	**455330**!
A130030	KOEH	**417546**!
A1305L-194	ROCKW	**410825**
A13063	WHITE	**473228**
A13262	CASE	**471535**=
A1342001	CYCLO	**474274**
A134Z012	CYCLO	**473231**!
A134Z012	GR-DV	**473231**!
A13591	LONG	203029
A136563	CASE	417452=
A136660	CASE	**416624**=
A13729	WHITE	**471750**!
A138295	CASE	**472350**!
A139499	HYST	**476470**
A139499	HYST	**476470**!
A1400	CATER	**471554**!
A1401	CATER	**472185**!
A1401	TMTR	**472185**!
A140145	CASE	**415991**
A140145	CASE	**415991**!
A1402	TMTR	**473232**
A1403	CATER	**471766**!
A1403	TMTR	**471766**!

! Industrial Size/Type * Minor Width Difference

= The U.S. customer service number is 877-4-TIMKEN. The Canadian customer service numbers are 800-565-4927 (English) and 800-565-0438 (French-Canadian).

Mfr. No.	Name	Zero Duplication or Recommended Industrial
A1404	TMTR	471762!
A1405A-1	ROCKW	417316!
A1405A-27X	ROCKW	417601
A1405C-3	ROCKW	471267!
A1405D-30X	ROCKW	417357
A1405D-4	ROCKW	254287
A1405E-5	ROCKW	415072
A1405F-6	ROCKW	471224!
A1405G-7	ROCKW	472636!
A1405K-11	ROCKW	472299
A1405P-42X	ROCKW	417357
A1405Q-17	ROCKW	411253!
A1405S-45X	ROCKW	476470!
A1405S-45X	ROCKW	476470
A1405W-23	ROCKW	471504
A1405W-49	ROCKW	473010=
A1405X-50	ROCKW	471276=
A1405Y-51	ROCKW	415192N
A1405Z-52	ROCKW	417601=
A140930	CASE	416961=
A1410	TMTR	200354
A14160	WHITE	472636!
A14161	WHITE	473228
A14162	WHITE	471750!
A14163	WHITE	450593!
A14164	WHITE	470050
A14216	WILYS	6074
A1423	JA-HE	471442!
A142927	CASE	477609=
A143754	MASSE	415449!
A1443	OLIVE	450040
A1443A	OLIVE	417196!
A1443B	GAL	417356!
A1443B	GAL	455188
A1443B	HOUGH	417356!
A1443B	HOUGH	455188
A1443B	OLIVE	417356!
A1443B	OLIVE	455188
A1443C	OLIVE	472157!
A1443C	OLIVE	472157
A14538	AMC	471442!
A14629	JOHND	200110
A14813	CASE	470898=
A148456	ALLCH	472012
A14987	CASE	472409!
A149A	BR-WN	470334!
A151	IRON	470334!
A152352	CASE	477673V=
A152353	CASE	477674V=
A152354	CASE	477586V=
A153036	CASE	415449
A155226	CASE	415559
A156423	CASE	3502*=
A156424	CASE	3503*=
A156425	JOHND	3123*=
A156426	JOHND	3124*=
A156577	CASE	473458!
A1625	CATER	481864
A1625	TMTR	481864
A16356	CASE	417262!
A164658	CASE	417485
A16524	OLIVE	471224!
A16653	CASE	455330!
A175836	AU-WS	416654!
A1797	TMTR	471689!
A18000	CASE	456967N=
A18000	CASE	456967V!
A1805A-1	ROCKW	415023
A1805A-131	ROCKW	412943
A1805A-157	KEN	473228!
A1805A-157	ROCKW	473228=
A1805A-209	ROCKW	473473
A1805A-261	ROCKW	416706
A1805A-365	ROCKW	415449!
A1805A-417	ROCKW	417344!
A1805A-443	ROCKW	353120
A1805A-495	ROCKW	415995!
A1805A-53	ROCKW	472636!
A1805A-547	ROCKW	417353!
A1805A-573	ROCKW	471341
A1805A-625	ROCKW	416271!
A1805A-79	ROCKW	415001!
A1805A183	ROCKW	471192
A1805A235	ROCKW	471785!
A1805A382	ROCKW	471192
A1805B-106	ROCKW	470950!
A1805B-106	ROCKW	6241S
A1805B-132	ROCKW	415045!
A1805B-2	ROCKW	417487
A1805B-236	ROCKW	472015!
A1805B-262	ROCKW	415458!
A1805B-262X	ROCKW	415984!
A1805B-28	ROCKW	472636!
A1805B-288	ROCKW	471341!
A1805B-314	ROCKW	473179!
A1805B-340	ROCKW	415725!
A1805B-366	ROCKW	481163!
A1805B-392	ROCKW	415854
A1805B-415	ROCKW	417602!
A1805B-418	ROCKW	417602!
A1805B-470	ROCKW	450362
A1805B-496	ROCKW	416706
A1805B-54	ROCKW	472924!
A1805B-548	ROCKW	415437
A1805B-574	ROCKW	470898
A1805B-678	ROCKW	417603!
A1805B-730	ROCKW	417269*=
A1805B-80	ROCKW	415960
A1805C-107	ROCKW	472394
A1805C-133	ROCKW	473232
A1805C-159	ROCKW	472164!
A1805C-185	ROCKW	415725!
A1805C-237	ROCKW	473474
A1805C-263	ROCKW	55358=
A1805C-29	ROCKW	416865!
A1805C-3	ROCKW	415960!
A1805C-315	ROCKW	470898
A1805C-367	ROCKW	473450
A1805C-419	ROCKW	470565!
A1805C-445	ROCKW	472164=
A1805C-523	ROCKW	481678=
A1805C-549	ROCKW	472439
A1805C-575	ROCKW	417247!
A1805C-627	ROCKW	473463=
A1805C289	ROCKW	471192
A1805C705	ROCKW	370064A
A1805D-134	ROCKW	472179
A1805D-160	ROCKW	450084!
A1805D-186	ROCKW	473203
A1805D-212	ROCKW	417484!
A1805D-290	ROCKW	473234!
A1805D-316	ROCKW	415498
A1805D-342	ROCKW	417597
A1805D-368	ROCKW	471276
A1805D-4	ROCKW	417158!
A1805D-498X	ROCKW	472439
A1805D-550	ROCKW	470530!
A1805D-56	ROCKW	473226
A1805D-576	ROCKW	100494
A1805D-576	ROCKW	476470!
A1805D-82	ROCKW	472636!
A1805E-135	ROCKW	416921!
A1805E-187	ROCKW	412473!
A1805E-239	ROCKW	455330!
A1805E-343	ROCKW	415371
A1805E-369	ROCKW	418028!
A1805E-369	ROCKW	455137
A1805E-395	ROCKW	417570
A1805E-447	ROCKW	472164=
A1805E-473	ROCKW	415035
A1805E-499	ROCKW	417269
A1805E-5	ROCKW	415023
A1805E-57	ROCKW	473444
A1805E-577	ROCKW	415447
A1805E-603	ROCKW	472397!
A1805E-695	ROCKW	473214!
A1805E109	ROCKW	471192
A1805F-110	ROCKW	472144!
A1805F-136	ROCKW	412119!
A1805F-162	ROCKW	417487!
A1805F-162	ROCKW	417487
A1805F-240	ROCKW	415656
A1805F-500	ROCKW	473467!
A1805F-526	ROCKW	473204
A1805F-552	ROCKW	473244!
A1805F-578	ROCKW	415449!
A1805F-58	ROCKW	455151
A1805F-630	ROCKW	450540
A1805F-708	ROCKW	417621
A1805G-319	ROCKW	472144!
A1805G-371	ROCKW	471984
A1805G-423	ROCKW	415379
A1805G-579	ROCKW	473232
A1805G-59	ROCKW	472394
A1805G-605	ROCKW	412473!
A1805G-631	ROCKW	450930=
A1805G-683	ROCKW	471271!
A1805G-709	ROCKW	416624*
A1805G-85	ROCKW	476838!
A1805H-138	ROCKW	471354!
A1805H-1386X	ROCKW	417603!
A1805H-164	ROCKW	416404!
A1805H-190	ROCKW	415142
A1805H-294	ROCKW	412871!
A1805H-372	ROCKW	50254=
A1805H-398	ROCKW	470898
A1805H-424	ROCKW	455509
A1805H-450	ROCKW	470530!
A1805H-502	ROCKW	8557=
A1805H-580	ROCKW	416107!
A1805H-60	ROCKW	472016
A1805H-606	ROCKW	473228!
A1805H-86	ROCKW	473211!
A1805J-140	ROCKW	471766!
A1805J-166	ROCKW	416288
A1805J-192	ROCKW	471224!
A1805J-218	ROCKW	472492!
A1805J-296	ROCKW	472164!
A1805J-348	ROCKW	470898!
A1805J-374	ROCKW	415303!
A1805J-400	ROCKW	472299
A1805J-478	ROCKW	416364!
A1805J-530	ROCKW	415138!
A1805J-556	ROCKW	417205!
A1805J-608	ROCKW	417134
A1805J-62	ROCKW	415995!
A1805J-686	ROCKW	472492!
A1805K-11	ROCKW	416288!
A1805K-141	ROCKW	473471
A1805K-193	ROCKW	470530!
A1805K-245	ROCKW	473214
A1805K-297	ROCKW	415035
A1805K-37	ROCKW	470334!
A1805K-375	ROCKW	470565!
A1805K-427	ROCKW	450090
A1805K-531	ROCKW	470565!
A1805K-557	ROCKW	472258!
A1805K-609	ROCKW	472157=
A1805K-63	ROCKW	412920!
A1805K-89	ROCKW	473238
A1805K401	ROCKW	470764!
A1805K401	ROCKW	50764
A1805L-12	ROCKW	416654!
A1805L-142	ROCKW	470774!
A1805L-168	ROCKW	472164!
A1805L-194	ROCKW	410825
A1805L-220	ROCKW	473475
A1805L-246	ROCKW	6532S=
A1805L-272	ROCKW	472015!
A1805L-350	ROCKW	416664!
A1805L-376	ROCKW	472185!
A1805L-402	ROCKW	415938
A1805L-454	ROCKW	470605!
A1805L-532	ROCKW	471887
A1805L-558	ROCKW	473215!
A1805L-584	ROCKW	417172
A1805L-610	ROCKW	473244!
A1805L-64	ROCKW	411253!
A1805L-688	ROCKW	416294!
A1805L-90	ROCKW	450456!
A1805M-13	ROCKW	415551
A1805M-167	ROCKW	473227!
A1805M-169	ROCKW	473227!
A1805M-273	ROCKW	473471
A1805M-299	ROCKW	455330!
A1805M-351	ROCKW	473243
A1805M-377	ROCKW	417492
A1805M-429	ROCKW	455251H
A1805M-455	ROCKW	417597
A1805M-481	ROCKW	417433
A1805M-533	ROCKW	415327
A1805M-559	ROCKW	471413!
A1805M-585	ROCKW	415259!
A1805M-611	ROCKW	417541
A1805M-65	ROCKW	450084!
A1805M-91	ROCKW	415001!
A1805M247	ROCKW	480630!
A1805N-118	ROCKW	473234
A1805N-278	ROCKW	472164=
A1805N-300	ROCKW	473010!
A1805N-378	ROCKW	472164=
A1805N-508	ROCKW	456305
A1805N-534	ROCKW	415551
A1805N-612	ROCKW	55532=
A1805N-638	ROCKW	417349
A1805N-66	ROCKW	415988
A1805N-673	ROCKW	455121
A1805N-716	ROCKW	415088*=
A1805N248	ROCKW	480630!
A1805N40	ROCKW	471787!
A1805P-120	ROCKW	415995!
A1805P-146	ROCKW	472572!
A1805P-16	ROCKW	415960
A1805P-198	ROCKW	470806
A1805P-250	ROCKW	471868
A1805P-276	ROCKW	412119!
A1805P-328	ROCKW	340823
A1805P-354	ROCKW	470898
A1805P-380	ROCKW	473244
A1805P-406	ROCKW	415090
A1805P-432	ROCKW	417555!
A1805P-458	ROCKW	415447
A1805P-484	ROCKW	472157!
A1805P-484	ROCKW	472157
A1805P-510	ROCKW	8561=
A1805P-510X	ROCKW	8561=
A1805P-536	ROCKW	415483
A1805P-562	ROCKW	417480!

! Industrial Size/Type * Minor Width Difference

= The U.S. customer service number is 877-4-TIMKEN. The Canadian customer service numbers are 800-565-4927 (English) and 800-565-0438 (French-Canadian).

Mfr. No.	Name	Zero Duplication or Recommended Industrial
A1805P-588	ROCKW	416294!
A1805P-666	ROCKW	473238!
A1805P-718	ROCKW	415498
A1805P94	ROCKW	471787!
A1805Q-199	ROCKW	473229
A1805Q-225	ROCKW	410524
A1805Q-277	ROCKW	455655!
A1805Q-303	ROCKW	410737!
A1805Q-307	ROCKW	471271!
A1805Q-381	ROCKW	450965
A1805Q-407	ROCKW	415234!
A1805Q-433	ROCKW	472258!
A1805Q-485	ROCKW	417211!
A1805Q-537	ROCKW	416297
A1805Q-563	ROCKW	471272!
A1805Q-589	ROCKW	415035!
A1805Q-615	ROCKW	415854
A1805Q-667	ROCKW	415035!
A1805Q-667	ROCKW	415035
A1805Q-693	ROCKW	473232!
A1805Q-95	ROCKW	417344!
A1805Q69	ROCKW	470059
A1805Q69	ROCKW	470380!
A1805R-122	ROCKW	417621!
A1805R-174	ROCKW	415991
A1805R-174	ROCKW	455146!
A1805R-200	ROCKW	472287!
A1805R-226	ROCKW	473237!
A1805R-278	ROCKW	417562
A1805R-304	ROCKW	471504!
A1805R-330	ROCKW	472179
A1805R-356	ROCKW	415483!
A1805R-408	ROCKW	470898=
A1805R-538	ROCKW	415725!
A1805R-564	ROCKW	450803
A1805R-590	ROCKW	416332!
A1805R-616	ROCKW	417357
A1805R-694	ROCKW	416664!
A1805R-96	ROCKW	470088
A1805R382	ROCKW	471192
A1805S-123	ROCKW	473473
A1805S-149	ROCKW	416282
A1805S-19	ROCKW	450467
A1805S-220	ROCKW	473475
A1805S-227	ROCKW	412027
A1805S-253	ROCKW	474272!
A1805S-279	ROCKW	471570!
A1805S-305	ROCKW	470954!
A1805S-331	ROCKW	417354!
A1805S-357	ROCKW	472439
A1805S-383	ROCKW	471195!
A1805S-409	ROCKW	471341
A1805S-487	ROCKW	417316!
A1805S-513	ROCKW	417349
A1805S-539	ROCKW	471341!
A1805S-565	ROCKW	473423
A1805S-617	ROCKW	416892!
A1805S-643	ROCKW	416556!
A1805S-643	ROCKW	472157
A1805S-695	ROCKW	473214!
A1805S-71	ROCKW	415234
A1805S-721	ROCKW	415449!
A1805S175	ROCKW	471765!
A1805T-124	ROCKW	472636!
A1805T-20	ROCKW	470088
A1805T-228	ROCKW	417316!
A1805T-254	ROCKW	471827!
A1805T-306	ROCKW	472492!
A1805T-358	ROCKW	473238
A1805T-384	ROCKW	412119!
A1805T-410	ROCKW	470898
A1805T-488	ROCKW	415984!
A1805T-514	ROCKW	8562=
A1805T-514X	ROCKW	8562=
A1805T-540	ROCKW	415447
A1805T-618	ROCKW	472705!
A1805T-722	ROCKW	471424!
A1805T-98	ROCKW	472179
A1805TSG-1	ROCKW	472636!
A1805U-151	ROCKW	416404!
A1805U-177	ROCKW	450039
A1805U-203	ROCKW	473214!
A1805U-281	ROCKW	455480!
A1805U-307	ROCKW	471271!
A1805U-333	ROCKW	413246
A1805U-381	ROCKW	450965
A1805U-47	ROCKW	417205!
A1805U-515	ROCKW	412119
A1805U-541	ROCKW	415447
A1805U-567	ROCKW	416321
A1805U-645	ROCKW	471424!
A1805U-723	ROCKW	418028
A1805U255	ROCKW	414268!
A1805V-152	ROCKW	416654
A1805V-256	ROCKW	455134!
A1805V-308	ROCKW	417600
A1805V-386	ROCKW	472185!
A1805V-490	ROCKW	417262!
A1805V-516	ROCKW	415389
A1805V-516X	ROCKW	415389
A1805V-542	ROCKW	416267!
A1805V-568	ROCKW	416865!
A1805V-620	ROCKW	472179
A1805V-724	ROCKW	416706!
A1805V-74	ROCKW	55353
A1805V334	ROCKW	471192
A1805W-101	ROCKW	473313
A1805W-127	ROCKW	415458!
A1805W-257	ROCKW	472409
A1805W-335	ROCKW	417349
A1805W-413	ROCKW	472164!
A1805W-439	ROCKW	471341!
A1805W-465	ROCKW	415960!
A1805W-517	ROCKW	416271!
A1805W-543	ROCKW	415303!
A1805W-569	ROCKW	417967!
A1805W-595	ROCKW	7516
A1805W-647	ROCKW	450523
A1805W-725	ROCKW	370008A
A1805W153	ROCKW	473227
A1805X-104	ROCKW	415449!
A1805X-128	KEN	472636!
A1805X-128	ROCKW	472636!
A1805X-154	ROCKW	411253!
A1805X-206	ROCKW	415437
A1805X-232	ROCKW	471835!
A1805X-258	ROCKW	416288
A1805X-260	ROCKW	417601
A1805X-284	ROCKW	455080
A1805X-286	ROCKW	410825
A1805X-336	ROCKW	415483!
A1805X-337	ROCKW	455480!
A1805X-362	ROCKW	417967!
A1805X-518	ROCKW	416130!
A1805X-544	ROCKW	416130!
A1805X648	ROCKW	471224!
A1805Y-103	ROCKW	471141!
A1805Y-105	ROCKW	471141!
A1805Y-129	ROCKW	415449!
A1805Y-155	KEN	475348N
A1805Y-155	ROCKW	475348N
A1805Y-233	ROCKW	476470!
A1805Y-233	ROCKW	476470
A1805Y-259	ROCKW	415001!
A1805Y-285	ROCKW	410524
A1805Y-337	ROCKW	455480!
A1805Y-51	ROCKW	415023
A1805Y-519	ROCKW	417316!
A1805Y-545	ROCKW	417191
A1805Y-571X	ROCKW	5588=
A1805Y-597	ROCKW	472397!
A1805Y-727	ROCKW	473239
A1805Y-77	ROCKW	476470
A1805Y207	ROCKW	480630!
A1805Y311	ROCKW	415991
A1805Y401	ROCKW	470764!
A1805Y401	ROCKW	50764
A1805Y493	ROCKW	327303!
A1805Z-104	ROCKW	415449!
A1805Z-130	ROCKW	415458!
A1805Z-234	ROCKW	472409!
A1805Z-26	ROCKW	254287
A1805Z-260	ROCKW	417601
A1805Z-286	ROCKW	410825
A1805Z-338	ROCKW	412027
A1805Z-364	ROCKW	471316
A1805Z-442	ROCKW	415447
A1805Z-494	ROCKW	471267!
A1805Z-494X	ROCKW	471267!
A1805Z-52	ROCKW	417487
A1805Z-520	ROCKW	417349
A1805Z-546	ROCKW	8907
A1805Z-572	ROCKW	473239!
A1805Z-598	ROCKW	470605!
A1805Z182	ROCKW	471689!
A18185	CASE	410308
A187	SPICE	473215!
A187	TRUK	473215!
A19284	OLIVE	473215!
A193983	IH	415035
A1978	JAC	474260
A1ES17908	ROCKW	455655!
A1ES20065	ROCKW	415379!
A1ES20065	ROCKW	415379
A1ES20179	ROCKW	415995!
A20288	CASE	410752
A205F-1019	ROCKW	415960
A205F-1023	ROCKW	412119
A205F-1029	ROCKW	417487
A205F-1029	ROCKW	417487!
A205F-1032	ROCKW	416888!
A205F-1034	ROCKW	355200
A205F-1034	ROCKW	416888!
A205F-713	ROCKW	415379
A205F-713	ROCKW	415379!
A205F-841	ROCKW	472492!
A205F-847	ROCKW	410987!
A205F-847	ROCKW	450686
A205F-863	ROCKW	417349
A205F-886	ROCKW	412119!
A205F-911	ROCKW	415995!
A205F-911	ROCKW	415995!
A205F-939	ROCKW	473239
A205F-960	ROCKW	476470
A205F-969	ROCKW	417337N*
A205F-997	ROCKW	471138!
A205P-1022	ROCKW	450073
A205P-1024	ROCKW	417485
A206X	FMC	471466
A2075	MINNM	472144!
A207X	FMC	470954!
A20939	CASE	415984!
A212039	GMC	416229
A212040	GMC	416239!
A21273	ROCKW	473214
A215F-964	ROCKW	2081
A21878	CASE	415725!
A2208N-820	ROCKW	730149
A221	VIC	16210
A222	VIC	16204
A2231	VIC	16200
A223897	GMC	55469
A223898	CASE	471821!
A223899	CASE	415449!
A224	VIC	16201
A224015	CASE	471689!
A2241	VIC	16201
A225	VIC	16208
A2262	VIC	16213
A227	VIC	16211
A228	VIC	16202
A228	VIC	16215
A2281	VIC	16212
A2291	VIC	16203
A230	VIC	16203
A230	VIC	16205
A231	VIC	16206
A232	VIC	16209
A235	VIC	16217
A237	VIC	16216
A23903	CASE	471224!
A24122	CASE	353135
A24122	CASE	474278
A245	SPICE	470606!
A2471	TMTR	473448
A249A	BR-WN	471141!
A25153	CASE	415960
A25235	CASE	471341!
A25244	CASE	470898
A25407	CASE	471554!
A25618	AMC	471579
A256A	OLIVE	473419
A25897	WHITE	473215!
A26190	WHITE	470059
A26190	WHITE	470380!
A26191	WHITE	450593!
A261997	GMC	472439
A26207	WHITE	450033
A26365	WHITE	470050
A26409	US-EL	474264
A26410	US-EL	417171!
A26500	WHITE	471281!
A265638	MASSE	473228!
A26586	KOEH	416865!
A265987	THEW	416556!
A265987	THEW	472157
A26671	WHITE	473444
A26758	CASE	476838!
A26759	CASE	417344!
A26760	CASE	472185!
A26770	CASE	415001!
A26777	CASE	472287!
A26778	CASE	471466!
A26842	CASE	450474
A26849	CASE	471224!
A26862	CASE	471570!
A26870	THEW	416921!
A26987	THEW	416556!
A26987	THEW	472157
A27086	WHITE	473367!
A27086	WHITE	473367
A27130	CASE	417316!
A272	COTTA	470950!
A272	COTTA	6241S
A27342	CASE	421
A27355	CASE	422
A27365	CASE	414
A27415	CASE	415458!

! Industrial Size/Type * Minor Width Difference

= The U.S. customer service number is 877-4-TIMKEN. The Canadian customer service numbers are 800-565-4927 (English) and 800-565-0438 (French-Canadian).

Mfr. No.	Name	Zero Duplication or Recommended Industrial
A27464	CASE	**455566**
A276919	NAPCO	450398
A276919	NAPCO	**471267**!
A27701	WHITE	**416738**!
A27701	WHITE	450096
A27705	CASE	**417344**!
A27838	CASE	**415458**!
A279A	OLIVE	**472705**!
A28	LAVIN	**471652**
A28096	THEW	**472636**!
A28138	CASE	**415379**
A28164	WHITE	**415988**
A28187	CASE	**418028**
A28187	CASE	455137!
A28192	WHITE	**470530**!
A282298	EATON	5M867
A28238	CASE	**473214**
A28317	CASE	**471649**!
A28549	CASE	**415458**!
A287818	CASE	**411245**!
A28963	WHITE	**474281**!
A29287EX	OLIVE	**471766**!
A293811	MASSE	**415351**!
A29424	CASE	**473367**!
A29424	CASE	**473367**
A296173	CHRYS	**417621**!
A29762	WHITE	**471224**!
A2TZ7052A	FORD	410059
A2TZ7052A	FORD	**470380**!
A30102	CASE	**455134**!
A3018A	GAL	**473228**!
A3018A	HOUGH	**473228**!
A3018A	OLIVE	**473228**!
A3019A	GAL	**473228**
A3019A	HOUGH	**473228**
A3019A	OLIVE	**473228**
A3019B	OLIVE	**472394**
A30302	CASE	**473426**
A30323	CASE	**472287**!
A3035	GAL	**471570**!
A3035	HOUGH	**471570**!
A3035	OLIVE	**471570**!
A30380	CASE	**473466**
A30501	CASE	**472636**!
A30527	CASE	**471192**
A30559	CASE	**471766**!
A30590	CASE	**471529**
A30600	CASE	**471539**!
A30606	CASE	**471341**!
A30639	WHITE	**412920**!
A30684	AMC	**471255**!
A30721	DURA	**473214**!
A3105	OLIVE	**472157**!
A3105	OLIVE	**472157**
A3106	TMTR	**323138**!
A3107	AM CA	**417316**!
A31101	LEROI	**450446**
A3111	HOUGH	**416271**!
A3111	OLIVE	**416271**!
A31139	LEROI	**473225**!
A31171	LEROI	450803
A31178	CASE	**471554**!
A31179	LEROI	**471554**!
A31205V-542	ROCKW	5473$
A31228	CASE	**473215**!
A313903R91	IH	**415227**=
A31396	LEROI	**471554**
A32015	CASE	415137!
A32015	CASE	**418028**
A321009R91	IH	5581=
A321148R91	IH	5592=
A321783R91	IH	**417602**=
A32275X	WHITE	**412920**!
A32304	CASE	**413247**!
A32305	CASE	**415984**!
A32308	CASE	340849
A32419	CASE	J1103
A32583	WHITE	**473213**!
A3262C-133	ROCKW	HU009A
A3262D-264	ROCKW	HU149A
A3262G-215	ROCKW	HU024A
A3262M-169	ROCKW	HU013A
A3262N-222	ROCKW	HU036A
A3262Q-277	ROCKW	HU065A
A3262Q-407	ROCKW	H075
A32803	CASE	J1125
A32807	CASE	**417499**
A331	VIC	16250
A332	VIC	16251
A333	VIC	16252
A334	VIC	16253
A334G	VIC	16254
A335	VIC	16255
A336	VIC	16256
A337	VIC	16257
A33734	CASE	**471195**!
A338	VIC	16258
A338542R91	IH	5302=
A339	VIC	16259
A340	VIC	16260
A34009	TROS	HU009A
A341	VIC	16261
A342	VIC	16262
A343	VIC	16263
A344	VIC	16264
A345	VIC	16265
A346	VIC	16266
A34656	CASE	**415150**!
A347	VIC	16267
A3517	CATER	**473010**!
A3517	TMTR	**473010**!
A353	VIC	16216
A35340	WHITE	**473215**!
A35372	WHITE	**417316**!
A35414	WHITE	**472234**
A35585	THEW	55030
A356	VIC	16205
A356005R1	NAVST	421
A35650	WHITE	**472164**!
A35652	WHITE	**415025**
A35848	WHITE	40566S
A362X4	CASE	50199S!
A362X4	CASE	6863S!
A364X17	CASE	**472354**!
A364X3	BU-SP	**330385**!
A36609	CASE	**473467**
A37147	CASE	**412871**!
A37558	CASE	**471281**!
A37611	CASE	**471192**
A37647	CASE	**472350**!
A380859	CHRYS	**416865**!
A380861	CHRYS	**415645**!
A380861	CHRYS	455104
A38231	CASE	**412871**!
A383	TMTR	**473442**!
A3868AB	CASE	**473215**!
A39110	CASE	**472015**=
A39273	CASE	**471341**!
A39441	CASE	**471442**!
A39453	CASE	**472354**!
A39666	CASE	**473010**!
A3994	CASE	**415458**!
A405F-2	ROCKW	55337
A405F-4	ROCKW	**455583N**!
A4068128	BRWNG	**471516**!
A4068771	BRWNG	470989
A4068797	BRWNG	**471612**
A4068813	BRWNG	**481397**
A4068821	BRWNG	**471612**
A4068839	BRWNG	481859
A4080388	BRWNG	**473458**!
A4107	TMTR	**471264**
A4179	CASE	**471504**!
A41814	CASE	**417499**
A43103	THEW	**416476**!
A43125	THEW	**416239**!
A43146	THEW	**417602**!
A4330	BLUE	**472193**!
A447	JAC	**471137**
A45350	TROS	9015S
A45351	TROS	**484058**
A45352S	TROS	8597S
A45353S	TROS	**473228**
A45357S	TROS	8429S
A45358S	TROS	8549S
A45360S	TROS	**472082**
A45363S	TROS	332062
A45364S	TROS	**473445**
A45365P	TROS	8460N
A45366S	TROS	8430S
A45369P	TROS	8460N
A45400	TROS	**470712**!
A45406S	TROS	**473010**!
A45408S	TROS	1010=
A45409S	TROS	**471192**
A45410	TROS	1012
A45410	TROS	1012N
A45411S	TROS	**472492**!
A45413	TROS	**472164**!
A45414	TROS	**472258**!
A45418S	TROS	1020
A45420	TROS	**471787**!
A45426	TROS	**472299**
A45428	TROS	**471571**
A45431	TROS	**330385**!
A45433	TROS	1035=
A45435	TROS	1037
A45437	TROS	226020
A45437	TROS	60X80X8!
A45438	TROS	1040=
A45439S	TROS	1041
A45443S	TROS	**473238**!
A45447S	TROS	1049
A45458	TROS	224045
A45458	TROS	40X62X12!
A45460	TROS	1062=
A45463	TROS	**470898**
A45466	TROS	2551
A45468	TROS	1070=
A45472	TROS	**472164**!
A45475	TROS	1077=
A45476	TROS	224040
A45476	TROS	40X60X10!
A45489	TROS	1091=
A45492	TROS	1094=
A45495	TROS	1097N
A45496	TROS	**471224**!
A45508	TROS	1110
A45513	TROS	**416664**!
A45518	TROS	**471195**!
A45521	HYST	**473226**
A45534	TROS	222510
A45534	TROS	25X35X7!
A45537	TROS	227040
A45537	TROS	70X90X10!
A45538	TROS	1163=
A45542S	TROS	2443
A45543S	TROS	2503
A45543S	TROS	2503N
A45544S	TROS	2551
A45545S	TROS	2669
A45549S	TROS	1174
A45549S	TROS	38X52X8.5!
A45553S	TROS	224015
A45556S	TROS	1181
A45556S	TROS	41X56X7!
A45557S	TROS	1167
A45558S	TROS	1183
A45563S	TROS	1188
A45564	TROS	1960
A45565	TROS	1955
A45565	TROS	52X65X9!
A45570S	TROS	1195
A45583S	TROS	1208
A45583S	TROS	48X72X7!
A45584S	TROS	1209
A45588	TROS	**1213N**
A45599	CASE	**471765**!
A45605K	TROS	5405
A45612	TROS	5070
A45613K	TROS	5072
A45645	TROS	5246
A45658K	TROS	5313
A45664K	TROS	5201
A45701K	TROS	7512SSO
A45703K	TROS	5403
A45705K	TROS	5405
A45706K	TROS	5406
A45708K	TROS	5408
A45710K	TROS	5410
A45714K	TROS	5414
A45719K	TROS	5419
A45731K	TROS	5585
A45752K	TROS	5452
A45753K	TROS	5453
A45758K	TROS	5458
A45760K	TROS	5460
A45762K	TROS	5462
A45764K	TROS	370002A
A45765K	TROS	**417506**
A45767K	TROS	370019A
A45768K	TROS	370005A
A45771K	TROS	370027A
A45772K	TROS	5472=
A45773K	TROS	5473
A45775K	TROS	**417505**
A45775K	TROS	5475
A45779K	TROS	5479
A45781K	TROS	370003A
A45787K	TROS	5487
A45788K	TROS	5589
A45794K	TROS	5494
A45795K	TROS	370006A
A45798K	TROS	5499=
A45800K	TROS	370003A
A45801K	TROS	370006A
A45807K	TROS	**417506**
A45807K	TROS	5089
A45807K	TROS	5563
A45810K	TROS	5092
A45813K	TROS	5072
A45816K	TROS	5573
A45817K	TROS	5576
A45818K	TROS	5095
A45819K	TROS	5578
A45822K	TROS	5585
A45823K	TROS	5072
A45824	TROS	5587

! Industrial Size/Type $ F-M Number Is Part Of A Kit
= The U.S. customer service number is 877-4-TIMKEN. The Canadian customer service numbers are 800-565-4927 (English) and 800-565-0438 (French-Canadian).

Mfr. No.	Name	Zero Duplication or Recommended Industrial
A45825K	TROS	5589
A45826K	TROS	5591
A45828K	TROS	5596=
A45829K	TROS	5095
A45905S	TROS	353135
A45905S	TROS	**474278**
A45918	TROS	**450666**
A45922	TROS	5711
A45932	TROS	5727
A45937	TROS	**472016**
A45948	TROS	5751
A45950	TROS	5756
A45952	TROS	5759=
A45957	TROS	**471141**!
A45961	TROS	5778
A45974	TROS	**473450**!
A45976	TROS	**471316**
A45977	TROS	5797
A45981	TROS	**414045**!
A45987	TROS	**450307**
A45988	TROS	6064
A45992	TROS	**470898**
A45998	TROS	**472179**
A46002	TROS	**473228**
A46004	TROS	5836
A46009	TROS	6064
A46016	TROS	**471224**
A46020	TROS	5865
A46025	TROS	5871
A46026S	TROS	**472258**
A46029	TROS	**455280**
A46031	TROS	5877
A46049	TROS	**473228**
A46052	TROS	200354
A46052S	TROS	200354
A46054	TROS	5921
A46055	TROS	**455151**
A46057	TROS	5924
A46070	TROS	5951
A46071S	TROS	5957S
A46073	TROS	370036A
A46073	TROS	370349A
A46073	TROS	380036A
A46074	TROS	5965
A46076	TROS	203034
A46077	TROS	5971
A46079	TROS	5976S
A46079S	TROS	7840S
A46081	TROS	**471526**!
A46088	TROS	**470625**!
A46214	TROS	**415437**
A46222	TROS	415899N
A46222	TROS	**416624**
A46234	TROS	6064
A46235	TROS	**413478**
A46238	TROS	6074
A46240	TROS	6077
A46242	TROS	**412871**!
A46243	TROS	**473473**
A46244	TROS	353141!
A46247	TROS	6090S
A46248	TROS	**471442**!
A46250	TROS	6098=
A46251	TROS	6101
A46254	TROS	7107A=
A46257	TROS	**473463**
A46258	TROS	**410708**
A46260	TROS	**470954**
A46261	TROS	6127
A46272	TROS	**472924**
A46273	TROS	**452222**!
A46277	TROS	6180=
A46281	TROS	**470354**
A46300	TROS	**473214**
A46303	TROS	6966S
A46304	TROS	**410987**=
A46307	TROS	6222
A46310	TROS	**471271**!
A46317	TROS	6241S
A46319	TROS	6245S=
A46325	TROS	370008A
A46326S	TROS	6283S
A46332	TROS	6312
A46335	TROS	6324S=
A46336	TROS	493291
A46337	TROS	3210
A46338S	TROS	**415284**
A46341S	TROS	6336S
A46342	TROS	473435
A46344	TROS	**450776**!
A46349S	TROS	6357S
A46350	TROS	6358
A46353	TROS	**473235**
A46356S	TROS	6370N
A46358	TROS	**470774**!
A46361	TROS	6380
A46401S	TROS	6402S=
A46405	TROS	**471442**!
A46405S	TROS	**471442**!
A46409	TROS	483054N
A46413	TROS	**472354**!
A46414	TROS	417267
A46415	TROS	**473228**
A46421S	TROS	**417349**!
A46429	TROS	370002A
A46434	TROS	6465
A46437	TROS	6465
A46441	TROS	**417223**
A46447S	TROS	**455566**
A46450	TROS	**471829**
A46453	TROS	6356
A46454	TROS	**472015**!
A46458	TROS	6513
A46460	TROS	**410708**
A46461	TROS	6522S
A46466	TROS	6532S=
A46468	TROS	**480630**
A46469	TROS	6547
A46474S	TROS	**415449**!
A46475	TROS	**455134**
A46477	TROS	**416888**!
A46478	TROS	6575S
A46481	TROS	**418028**
A46483S	TROS	6590S
A46485S	TROS	6592S=
A46488S	TROS	6597S
A46501S	TROS	6612S
A46509S	TROS	370030A
A46510S	TROS	6636S
A46514	TROS	**471267**!
A46515S	TROS	6643S
A46516	TROS	6644
A46517S	TROS	9613S
A46518S	TROS	**470954**!
A46519	TROS	6649
A46521S	TROS	**473234**!
A46524	TROS	6663S
A46525S	TROS	6668S
A46528	TROS	**471413**!
A46530S	TROS	**470605**!
A46531	TROS	**417355**!
A46531	TROS	485497
A46531S	TROS	**417355**!
A46531S	TROS	485497
A46533	TROS	6703S
A46533S	TROS	6703S
A46534	TROS	**470712**
A46537	TROS	205004
A46538S	TROS	**473179**
A46547S	TROS	**412473**!
A46548S	TROS	6754S=
A46549	TROS	**416892**
A46550S	TROS	6759S
A46551S	TROS	6760S
A46553S	TROS	311189
A46557S	TROS	**417134**
A46558	TROS	6781
A46560	TROS	6785
A46562S	TROS	370001A
A46563S	TROS	**471570**!
A46601S	TROS	**471264**!
A46602S	TROS	**481443**!
A46603	TROS	6808N
A46606	TROS	6815
A46606S	TROS	6815
A46607	TROS	6818
A46609S	TROS	**473229**
A46610S	TROS	6832S
A46611S	TROS	**417506**
A46612S	TROS	**470954**
A46613	TROS	6840S
A46615	TROS	7600S
A46619S	TROS	6846S=
A46620S	TROS	6847S
A46626S	TROS	6855N=
A46627S	TROS	**410496**!
A46628S	TROS	**471267**!
A46629S	TROS	**417210**!
A46630S	TROS	6863S!
A46631	TROS	**417505**
A46633S	TROS	370005A
A46634S	TROS	370027A
A46635S	TROS	**417254**
A46636S	TROS	**473234**!
A46637S	TROS	**471827**
A46638S	TROS	**473367**!
A46638S	TROS	**473367**
A46639R	TROS	**470898**!
A46640S	TROS	**473235**!
A46646	TROS	6886S
A46647S	TROS	**415449**!
A46648	TROS	6897=
A46650S	TROS	6906S
A46657	TROS	6930
A46658	TROS	9568
A46659S	TROS	**471141**
A46661S	TROS	7686S
A46662S	TROS	6952S=
A46663	TROS	44052
A46664	TROS	6954S
A46664S	TROS	6954S
A46665	TROS	44053
A46666	TROS	6960
A46668S	TROS	3103!
A46670	TROS	6966S
A46671	TROS	203008
A46672	TROS	6985
A46673R	TROS	**473459**
A46675S	TROS	**474278**
A46675S	TROS	6859S
A46800S	TROS	370006A
A46801S	TROS	7013S
A46802S	TROS	7014S
A46803R	TROS	7018N=
A46806S	TROS	**473317**
A46808	TROS	370004A
A46810S	TROS	**473234**!
A46811S	TROS	410059
A46811S	TROS	**470380**!
A46815	TROS	9613S
A46815S	TROS	9613S
A46816S	TROS	**473234**
A46818S	TROS	7044NA
A46820S	TROS	3103!
A46821	TROS	**472354**!
A46823	TROS	7107A=
A46825	TROS	7131
A46826S	TROS	200110
A46829S	TROS	7154S
A46831S	TROS	**418028**
A46832S	TROS	7186S
A46833S	TROS	7188S
A46834	TROS	5126
A46835	TROS	7216
A46837S	TROS	**471344**
A46838S	TROS	7235S
A46840	TROS	7245
A46843	TROS	**473235**
A46844	TROS	7338N
A46844S	TROS	7338N
A46846S	TROS	7354N
A46847	TROS	370003A
A46848	TROS	370006A
A46849S	TROS	**415302**
A46850S	TROS	7381S
A46853S	TROS	321460
A46855S	TROS	9376
A46856S	TROS	**474260**
A46857S	TROS	7399S!
A46858S	TROS	7412S
A46861S	TROS	370015A
A46862R	TROS	7442H
A46863S	TROS	370019A
A46864S	TROS	370021A
A46865S	TROS	370005A
A46866S	TROS	7456N
A46867	TROS	7457N
A46867S	TROS	7457N
A46868S	TROS	**473237**
A46869	TROS	7994S
A46870S	TROS	**473214**!
A46872S	TROS	342805
A46875S	TROS	3095
A46876R	TROS	**415449**
A46877	TROS	7607
A46878S	TROS	9150S
A46879S	TROS	7700S!
A46882	TROS	5113
A46882	TROS	7721!
A46883S	TROS	**471652**
A46884R	TROS	7751H
A46886S	TROS	**473231**!
A46890S	TROS	6241S
A46891	TROS	7780
A46892S	TROS	**471750**!
A46893S	TROS	**350936**
A46894P	TROS	**471193**
A46895S	TROS	**473228**!
A46896	TROS	**472164**
A46897S	TROS	7840S
A46899S	TROS	370007A
A46900S	TROS	7886S
A46901S	TROS	**471821**!
A46902S	TROS	7929S
A46903	TROS	7934S
A46904S	TROS	**473473**
A46905S	TROS	353135
A46905S	TROS	**474278**

! Industrial Size/Type
= The U.S. customer service number is 877-4-TIMKEN. The Canadian customer service numbers are 800-565-4927 (English) and 800-565-0438 (French-Canadian).

Mfr. No.	Name	Zero Duplication or Recommended Industrial
A46906S	TROS	7896S
A46908S	TROS	7399S!
A47002S	TROS	8059S
A47004	TROS	8610
A47005	TROS	8121S
A47005S	TROS	8121S
A47006S	TROS	8133S
A47007	TROS	8139
A47009	TROS	8168=
A47010	TROS	**472070**
A47011	TROS	8243
A47012	TROS	8724S
A47013S	TROS	8293S
A47015S	TROS	8370S
A47016S	TROS	8421S
A48002	TROS	**471526**!
A48004	TROS	**471750**!
A48005	TROS	**473215**!
A48006	TROS	410059
A48006	TROS	**470380**!
A48006S	TROS	410059
A48006S	TROS	**470380**!
A48008	TROS	**474264**
A48011	TROS	**473228**!
A48012	TROS	**472185**!
A48013S	TROS	**472439**
A48014	TROS	**472924**!
A48016	TROS	**470530**!
A48018	TROS	**473464**
A48020	TROS	**412119**!
A48022	TROS	**473467**!
A48023	TROS	**471224**!
A48024S	TROS	**472409**!
A48025	TROS	**472826**!
A48026	TROS	**412920**!
A48027	TROS	**471192**
A48028S	TROS	**470625**!
A48029	TROS	**470954**!
A48031	TROS	**472287**!
A48035	TROS	**471763**
A48036	TROS	**471765**!
A48037S	TROS	**471766**!
A48038	TROS	**471801**!
A48039S	TROS	**473016**!
A48042	TROS	**472179**
A48045	TROS	**471649**!
A48047	TROS	**470712**!
A48049	TROS	**473466**
A48051	TROS	**473235**!
A48055S	TROS	**410308**!
A48056	TROS	**471391**!
A48057	TROS	**473245**!
A48058	TROS	**472636**!
A48059	TROS	**412040**
A48061	TROS	**472164**!
A48067S	TROS	**410496**!
A48069	TROS	**471689**!
A48072S	TROS	**471442**!
A48074S	TROS	**471827**!
A48076S	TROS	**410708**
A48077S	TROS	**471984**
A48078	TROS	**471829**
A48081S	TROS	**471344**
A48085S	TROS	**476470**!
A48085S	TROS	**476470**
A49001	TROS	**415458**!
A49002	TROS	**417316**!
A49003	TROS	**417344**!
A49004	TROS	**415960**
A49004S	TROS	**415960**!
A49006	TROS	**415995**!
A49006S	TROS	**415995**!
A49010	TROS	**476470**
A49011	TROS	**415023**
A49014	TROS	**415036**
A49015	TROS	**416891**!
A49017S	TROS	**416271**!
A49018	TROS	**415449**!
A49019	TROS	**417343**!
A49021	TROS	**417351**!
A49023S	TROS	**415379**
A49024	TROS	**417205**!
A49026S	TROS	415192N
A49027	TROS	416556!
A49027	TROS	**472157**
A49029S	TROS	**416154**!
A49030	TROS	**417247**!
A49030S	TROS	**417247**!
A49032S	TROS	**416706**!
A49033S	TROS	**417349**!
A49034	TROS	**415991**
A49034S	TROS	**415991**
A49035S	TROS	**415379**
A49036	TROS	**417492**
A49039	TROS	415656
A49040S	TROS	**418028**
A49042S	TROS	415899N
A49042S	TROS	**416624**
A50065	CASE	**471821**=
A50085	CASE	**470898**
A50097	CASE	**415995**!
A5013	DANMA	**417487**
A50252	CASE	476535N=
A50257	TROS	5462
A50420	CASE	476535
A50422	CASE	**417344**!
A50423	CASE	**471689**!
A50424	CASE	**470898**
A50425	CASE	**473228**=
A505	VIC	16300
A50594	TROS	**472258**
A506	VIC	16301
A50626	FAIRB	**471567**!
A507	VIC	16302
A508	VIC	16303
A509	VIC	16306
A50981	FAIRB	**471766**!
A50981A	FAIRB	**471766**!
A510	VIC	16304
A51000	TROS	**471264**!
A51002	TROS	**473215**!
A51003	TROS	**470380**!
A51004	TROS	**473228**!
A51007S	TROS	**470334**!
A51010	TROS	**470530**!
A51012	TROS	**471192**
A51013	TROS	**470954**!
A51014	TROS	**473460**
A51015	TROS	**471760**
A51016	TROS	**471763**
A51017	TROS	**471765**!
A51019	TROS	**472397**!
A51021	TROS	**472258**!
A51023	TROS	**471267**!
A51026	TROS	**417316**!
A51027	TROS	**416921**!
A51028	HENRY	42352S
A51031	TROS	**415072**
A51032	HENRY	40401
A51033	TROS	**416229**
A51035S	TROS	**415449**!
A51036	TROS	**417621**!
A51037	TROS	**417181**!
A51039	TROS	**415991**
A51039	TROS	**415991**!
A51041	TROS	**417191**
A511	VIC	16305
A512	VIC	16307
A51748	FAIRB	**471787**!
A51749	GMC	**410102**
A51765	FAIRB	**473205**
A51948	CASE	**473490**
A51977	TROS	**473238**!
A51994	GMC	**415021**
A52000	TROS	**471466**!
A52001	TROS	**471554**!
A52002	TROS	**473215**!
A52003	TROS	**470380**!
A52005	TROS	**473367**
A52006	TROS	**473228**!
A52007	TROS	**473228**!
A52008	TROS	**472185**!
A52009	TROS	**471466**!
A52010	TROS	**472924**!
A52012	TROS	**470530**!
A52014	TROS	**411253**!
A52015	TROS	**412119**
A52016	TROS	**471192**
A52019S	TROS	**471766**!
A52022S	TROS	**472179**
A52023	TROS	**473179**!
A52024	TROS	**472394**
A52025	TROS	**472397**!
A52027	TROS	**410308**
A52029S	TROS	**472636**!
A52030	TROS	**472164**!
A52031	TROS	**473448**
A52032	TROS	**470898**
A52034	TROS	**472492**!
A52035	TROS	**473227**!
A52037	TROS	**471271**!
A52039S	TROS	**470565**!
A52040	TROS	**450666**
A52042	TROS	**415001**!
A52043	TROS	**415458**!
A52044	TROS	**417316**!
A52044S	TROS	**417316**!
A52046	TROS	**415960**
A52047	TROS	**416921**!
A52048S	TROS	**416654**
A52049S	TROS	**415995**!
A52049S	TROS	**415995**!
A52050S	TROS	**416288**
A52052S	TROS	**476470**
A52052S	TROS	**476470**!
A52054	TROS	**415035**
A52055	TROS	**415371**
A52057	TROS	**416865**!
A52057S	TROS	**416865**!
A52058	TROS	**416476**!
A52059	TROS	**416239**!
A52061S	TROS	**416271**!
A52062	TROS	**416282**
A52062S	TROS	**416282**
A52063S	TROS	**417563**
A52064	TROS	**417602**!
A52066	TROS	415137!
A52066	TROS	**418028**
A52066S	TROS	415137!
A52066S	TROS	**418028**
A52067S	TROS	415146!
A52067S	TROS	**415991**
A52068	TROS	**415449**!
A52069	TROS	**417343**!
A52070	TROS	5578
A52071	TROS	**417171**!
A52072	TROS	**417181**!
A52073	TROS	**412473**!
A52076	TROS	**416706**
A52078	TROS	**416706**
A52079	TROS	**417484**!
A52081S	TROS	**417159**
A52082S	TROS	475348N
A52086	TROS	**410825**
A52087	TROS	**415437**
A52091	TROS	**416394**
A52094	TROS	8996S=
A52236	TROS	**417488**!
A5257	CATER	5751
A5257	TMTR	5751
A5287	TW-DI	**415027**
A5287	TW-DI	**415027**!
A53002	TROS	**471472**=
A53003	TROS	**471264**
A53008	TROS	**471554**
A53011	TROS	**473213**!
A53012	TROS	43089S
A53013	TROS	40059S
A53015	TROS	7886S
A53016	TROS	**471821**!
A53019	TROS	**472185**!
A53020	TROS	40071S
A53022	TROS	40085S
A53023	TROS	40094S
A53024	TROS	40097S
A53025	TROS	40101S
A53028	TROS	42421S
A53029	TROS	240119
A53030	TROS	**471224**
A53032	TROS	**471413**
A53032S	TROS	**471413**
A53033	TROS	**470954**
A53040	TROS	**471760**
A53041	TROS	**471763**
A53045	TROS	40169S
A53046	TROS	40183S!
A53047	TROS	**471571**
A53048	TROS	40185
A53055	TROS	40208
A53058	TROS	**471647**
A53061	TROS	**471689**
A53063	TROS	**471787**
A53064	TROS	40286
A53066	TROS	40301S
A53067	TROS	40316S
A53068	TROS	240319
A53070	TROS	40328
A53072	TROS	40337S
A53076	TROS	40410S
A53077	TROS	40369S
A53078	TROS	40370S
A53081	TROS	**474276**
A53084	TROS	40389S
A53085	TROS	**472354**!
A53086	TROS	417267
A53087	TROS	42352S
A53088S	TROS	40401
A53089	TROS	42763
A53091	TROS	40410S
A53092	TROS	351487
A53093S	TROS	40433S
A53095	TROS	40438S
A53097	TROS	40468
A53098	TROS	40494S
A53100	TROS	442380
A53101	TROS	40520S
A53103	TROS	40526S
A53104S	TROS	40555

! Industrial Size/Type
= The U.S. customer service number is 877-4-TIMKEN. The Canadian customer service numbers are 800-565-4927 (English) and 800-565-0438 (French-Canadian).

Mfr. No.	Name	Zero Duplication or Recommended Industrial
A53104S	TROS	40555S!
A53105	TROS	**471821**!
A53106	TROS	40566S
A53107	TROS	40568S
A53108	TROS	40576S
A53112	TROS	40627S=
A53113	TROS	**481537**
A53116	TROS	**471737**=
A53119	TROS	40769S
A53121S	TROS	6815
A53122	TROS	340787
A53126	TROS	40973S
A53128	TROS	41013S
A53131	TROS	41075S
A53136P	TROS	**416071**
A53138	TROS	46997S
A53139	TROS	43086S
A53140S	TROS	45013S
A53145	TROS	45187S
A53147	TROS	45031S
A53150	TROS	45653S
A53151	TROS	45825S
A53152	TROS	45827S
A53153S	TROS	**472179**
A53155S	TROS	40494S
A53156S	TROS	**473445**
A53159	TROS	45525S
A54002	TROS	**474277**
A54003	TROS	**470004**!
A54005S	TROS	**471530**
A54006	TROS	**471281**!
A54007	TROS	**471532**
A54007S	TROS	**471532**
A54008	TROS	**471466**!
A54008S	TROS	**471466**!
A54010	TROS	50010
A54013	TROS	**471472**!
A54013S	TROS	**471472**!
A54015S	TROS	**471535**!
A54016	TROS	**473405**
A54016S	TROS	**473405**
A54018	TROS	**471549**!
A54020S	TROS	**471551**!
A54021	TROS	**471558**
A54022	TROS	**471255**!
A54022S	TROS	**471255**!
A54023	TROS	**471255**!
A54024	TROS	**471553**!
A54025	TROS	50026
A54027	TROS	**471567**!
A54027S	TROS	**471567**!
A54029	TROS	**481568**!
A54029S	TROS	**481568**!
A54030	TROS	**474253**
A54031	TROS	473414
A54032	TROS	**471570**!
A54032S	TROS	**471570**!
A54033	TROS	450033
A54034	TROS	**474273**
A54035	TROS	473412
A54037	TROS	**473415**
A54038	TROS	**471137**
A54039	TROS	450038
A54040	TROS	**450039**
A54041	TROS	**450040**
A54041S	TROS	**450040**
A54043	TROS	**450593**!
A54043S	TROS	**450593**!
A54045	TROS	**473419**
A54046	TROS	450044
A54047	TROS	**476838**!
A54049	TROS	473428
A54050	TROS	**473426**
A54051	TROS	**450048**
A54052	TROS	**471750**!
A54053	TROS	470050
A54054	TROS	**473427**
A54055	TROS	**471354**!
A54055S	TROS	**471354**!
A54056	TROS	**473213**!
A54057	TROS	450054
A54058	TROS	**473215**!
A54058S	TROS	**473215**!
A54060	TROS	**473225**!
A54061	TROS	**473438**
A54062	TROS	470059
A54062	TROS	**470380**!
A54062S	TROS	470059
A54062S	TROS	**470380**!
A54066	TROS	470950!
A54066	TROS	6241S
A54067	TROS	**474264**
A54068	TROS	**471820**
A54069	TROS	**471821**!
A54070	TROS	**473232**!
A54071	TROS	**473367**!
A54071	TROS	**473367**
A54071S	TROS	**473367**!
A54071S	TROS	**473367**
A54072	TROS	**473228**
A54072S	TROS	**473228**
A54073	TROS	**450068**
A54074	TROS	**473232**
A54075	TROS	**472185**!
A54075S	TROS	**472185**!
A54077	TROS	**472439**
A54078	TROS	**481864**
A54078S	TROS	**481864**
A54079S	TROS	450073
A54080	TROS	**474265**
A54081	TROS	50075=
A54082	TROS	**470334**!
A54083	TROS	**474281**!
A54084	TROS	**473444**
A54085	TROS	450079=
A54086	TROS	**473446**
A54087	TROS	50081
A54088	TROS	**473238**
A54089	TROS	**472924**!
A54091	TROS	**450084**!
A54091S	TROS	**450084**!
A54092	TROS	**450084**!
A54093	TROS	**470530**!
A54094	TROS	470086
A54095	TROS	**473313**
A54096	TROS	**470088**
A54096S	TROS	**470088**
A54097	TROS	450089
A54098	TROS	**450090**
A54100	TROS	**473458**!
A54102	TROS	**473462**
A54103	TROS	**473464**!
A54103	TROS	**473464**
A54104	TROS	**416738**!
A54104	TROS	450096
A54105	TROS	**413469**!
A54106	TROS	**412943**
A54107	TROS	**411253**!
A54108	TROS	**410694**!
A54109	TROS	**412119**!
A54111	TROS	**410102**
A54112	TROS	410686N
A54113	TROS	450104
A54114	TROS	**414045**!
A54116	TROS	**473471**
A54118	TROS	**473441**
A54120	TROS	450111
A54123	TROS	**473467**
A54125	TROS	**473450**
A54126	TROS	**472572**!
A54126S	TROS	**472572**!
A54127	TROS	**473449**
A54128	TROS	**471442**!
A54128S	TROS	**471442**!
A54130	TROS	**471224**!
A54132	TROS	**472409**!
A54132S	TROS	**472409**!
A54133	TROS	473437
A54134	TROS	450124=
A54135	TROS	50126
A54136	TROS	**471735**
A54138S	TROS	450129
A54138S	TROS	**472826**!
A54139	TROS	**412920**!
A54141	TROS	**450133**
A54142	TROS	**471192**
A54142S	TROS	**471192**
A54143	TROS	**470625**!
A54143S	TROS	**470625**!
A54144	TROS	**471529**
A54145	TROS	**473459**
A54145S	TROS	**473459**
A54146	TROS	**472234**
A54150	TROS	**450143**
A54151	TROS	**473226**
A54152	TROS	**473460**
A54154	TROS	450147
A54155	TROS	**473463**
A54156	TROS	40769S
A54157	TROS	**471750**!
A54159	TROS	**472560N**!
A54159S	TROS	**472560N**!
A54160	TROS	**473205**
A54162	TROS	**472287**!
A54163	TROS	**473234**
A54164	TROS	**473447**
A54165	TROS	350156
A54165	TROS	**473096**
A54166	TROS	**471760**
A54166S	TROS	**471760**
A54167	TROS	**471762**!
A54168	TROS	450159
A54169	TROS	**471763**
A54170	TROS	**471764**!
A54171	TROS	**471765**!
A54173	TROS	**471766**!
A54173S	TROS	**471766**!
A54175	TROS	**473424**!
A54176	TROS	450165
A54176	TROS	**471801**!
A54178	TROS	**473212**!
A54179	TROS	50168
A54180	TROS	**473214**
A54182	TROS	**473016**!
A54182S	TROS	**473016**!
A54184	TROS	**450173**
A54186	TROS	450177
A54188	TROS	450177
A54190	TROS	**473421**
A54192	TROS	**471747**!
A54193	TROS	**472179**
A54193S	TROS	**472179**
A54195	TROS	**471571**
A54196	TROS	**473229**
A54197	TROS	**473236**!
A54198	TROS	**471619**!
A54200	TROS	**450188**
A54201	TROS	**471692**!
A54201S	TROS	**471692**!
A54202	TROS	**410190**
A54203	TROS	50191
A54204	TROS	**473473**
A54206	TROS	**473010**!
A54206S	TROS	**473010**!
A54209	TROS	**471103**!
A54209S	TROS	**471103**!
A54212	TROS	50199S!
A54212	TROS	6863S!
A54212S	TROS	50199S!
A54212S	TROS	6863S!
A54214	TROS	320457
A54216	TROS	**472705**!
A54216S	TROS	**472705**!
A54217	TROS	**481443**!
A54217S	TROS	**481443**!
A54218	TROS	**471231**!
A54218S	TROS	**471231**!
A54219	TROS	**471579**
A54222	TROS	**451583**!
A54222S	TROS	**451583**!
A54223	TROS	50209
A54224	TROS	**480210**!
A54227	TROS	**471645**
A54228	TROS	473414
A54229	TROS	**471646**!
A54229S	TROS	**471646**!
A54231S	TROS	**471647**
A54232	TROS	**471648**
A54233	TROS	**471649**!
A54233S	TROS	**471649**!
A54234	TROS	481650
A54235	TROS	**471651**
A54236	TROS	**471684**!
A54236S	TROS	**471684**!
A54238	TROS	471686
A54240	TROS	**470590**
A54242	TROS	472951
A54242	TROS	**474252**
A54243	TROS	**471688**
A54244	TROS	**471689**!
A54244S	TROS	**471689**!
A54248	TROS	**471705**!
A54249	TROS	**471733**
A54253	TROS	**470712**!
A54253S	TROS	**470712**!
A54254	TROS	**471744**!
A54255	TROS	**450342**
A54257	TROS	**471785**!
A54257S	TROS	**471785**!
A54260	TROS	**471787**!
A54261	TROS	**471795**
A54264	TROS	**473211**!
A54265S	TROS	473436
A54268	TROS	50254=
A54269S	TROS	**473439**!
A54272	TROS	**482253**
A54273	TROS	450260
A54274S	TROS	**473466**
A54275	TROS	**470682**
A54275S	TROS	**470682**
A54276	TROS	451469
A54278	TROS	**473235**!
A54279	TROS	50266
A54280	TROS	**472070**
A54281	TROS	473451!
A54282	TROS	450269
A54283	TROS	**471866**!
A54285	TROS	**471868**

! Industrial Size/Type

= The U.S. customer service number is 877-4-TIMKEN. The Canadian customer service numbers are 800-565-4927 (English) and 800-565-0438 (French-Canadian).

Mfr. No.	Name	Zero Duplication or Recommended Industrial
A54286	TROS	**450273**
A54287	TROS	450274
A54288	TROS	450275
A54291	TROS	**450279**
A54292	TROS	**471866**!
A54293	TROS	**473179**!
A54295	TROS	**473179**!
A54297	TROS	450285
A54298	TROS	**474274**
A54301	TROS	**470334**!
A54301	TROS	50289
A54302	TROS	**471141**!
A54302S	TROS	**471141**!
A54304	TROS	473453
A54306	TROS	**472144**!
A54309	TROS	**473239**
A54311	TROS	**472394**
A54311S	TROS	**472394**
A54312	TROS	**472397**!
A54312S	TROS	**472397**!
A54313	TROS	**472012**
A54313S	TROS	**472012**
A54314	TROS	**472015**!
A54314S	TROS	**472015**!
A54315	TROS	**473457**!
A54317	TROS	**473461**!
A54318	TROS	**450307**
A54319	TROS	**410308**!
A54319S	TROS	**410308**!
A54320	TROS	**471391**!
A54321	TROS	**473242**
A54322	TROS	450311
A54323	TROS	**472016**
A54324	TROS	450313
A54325	TROS	**473243**
A54325S	TROS	**473243**
A54326	TROS	**473245**!
A54327	TROS	**472636**!
A54328	TROS	**411394**!
A54330	TROS	**481163**!
A54331	TROS	**473475**
A54332	TROS	**412040**
A54332S	TROS	**412040**
A54333	TROS	**472029**
A54334	TROS	**413478**
A54336	TROS	**450326**
A54337	TROS	50327
A54338	TROS	470328
A54338	TROS	**481213**!
A54339	TROS	**412871**!
A54340	TROS	**470605**!
A54342	TROS	**450332**
A54343	TROS	**470334**!
A54344	TROS	450335
A54345	TROS	**474255**
A54346	TROS	**450339**
A54347	TROS	**450340**
A54348	TROS	**450341**
A54349	TROS	450343
A54350	TROS	**473425**
A54351	TROS	50345=
A54352	TROS	**474254**
A54354	TROS	**413247**!
A54355	TROS	**471504**!
A54355S	TROS	**471504**!
A54356	TROS	**472164**!
A54358	TROS	**470354**
A54359	TROS	**471538**!
A54360	TROS	**474278**
A54362	TROS	**473231**
A54362S	TROS	**473231**
A54363	TROS	**473448**
A54364	TROS	**471870**!
A54365	TROS	**472193**!
A54366	TROS	**450362**
A54368	TROS	**350364**
A54369	TROS	**470898**
A54374	TROS	**451948**
A54375	TROS	**411500**
A54376	TROS	6936S
A54378	TROS	**471652**
A54379	TROS	**474276**!
A54380	TROS	**330385**!
A54382	TROS	**472492**!
A54384	TROS	473407
A54385	TROS	**473227**
A54385S	TROS	**473227**
A54386	TROS	**472354**!
A54388	TROS	450398
A54388	TROS	**471267**!
A54389	TROS	**450400**
A54390	TROS	**352541**
A54391	TROS	50402
A54392	TROS	**470774**!
A54392S	TROS	**470774**!
A54394	TROS	50405
A54396	TROS	**470409**!
A54396	TROS	50409
A54397	TROS	**471424**!
A54399	TROS	**450412**
A54400	TROS	353132
A54401	TROS	**472311**!
A54402	TROS	450415
A54403	TROS	**473442**!
A54404	TROS	50419
A54406	TROS	**450765**!
A54408	TROS	**471730**
A54410	TROS	450430
A54411S	TROS	**471539**!
A54412	TROS	**471138**!
A54414	TROS	**350435**
A54417	TROS	**471341**!
A54417S	TROS	**471341**!
A54419	TROS	**471835**!
A54419S	TROS	**471835**!
A54420	TROS	50445
A54421	TROS	**450446**
A54423	TROS	**471270**!
A54423S	TROS	**471270**!
A54424	TROS	**480630**!
A54425	TROS	**473197**
A54426	TROS	**473224**!
A54428	TROS	**472319**
A54429	TROS	**450456**!
A54430S	TROS	450457
A54432	TROS	**473440**!
A54433	TROS	50462
A54434	TROS	450463
A54438	TROS	450467
A54439	TROS	50468
A54440	TROS	**481537**
A54441	TROS	**472810**!
A54441S	TROS	**472810**!
A54442	TROS	**450472**!
A54443	TROS	**450474**
A54444	TROS	**471344**
A54444S	TROS	**471344**
A54446	TROS	50478
A54447	TROS	**473445**
A54448	TROS	**323138**!
A54448S	TROS	**323138**!
A54449	TROS	**471818**
A54450	TROS	450482
A54450S	TROS	450482
A54452	TROS	**411330**!
A54455	TROS	**470487**!
A54457	TROS	**473244**
A54458	TROS	50490=
A54459	TROS	480491
A54460	TROS	**450492**
A54462	TROS	**472164**!
A54463	TROS	**410496**!
A54464	TROS	450497=
A54465	TROS	50501
A54467	TROS	50501
A54468	TROS	**474260**
A54470	TROS	450503=
A54471	TROS	**472843**
A54471S	TROS	**472843**
A54473	TROS	**470506**!
A54478	TROS	50514
A54479	TROS	470515
A54480	TROS	450516
A54481	TROS	**471271**!
A54483	TROS	**471272**!
A54483S	TROS	**471272**!
A54484	TROS	**473423**
A54484S	TROS	**473423**
A54485	TROS	**472258**!
A54485S	TROS	**472258**!
A54486	TROS	**450523**
A54487S	TROS	**410524**
A54488	TROS	**471887**
A54489	TROS	**474276**!
A54489S	TROS	**474276**!
A54490	TROS	50528
A54491	TROS	**450984**
A54492	TROS	**470530**!
A54493	TROS	450532
A54494	TROS	450533
A54496	TROS	450535
A54496	TROS	**471264**!
A54497	TROS	450536
A54497	TROS	**471535**!
A54499S	TROS	**414268**!
A54500	TROS	450540
A54501	TROS	**471689**!
A54502	TROS	**474272**
A54503	TROS	450545
A54504	TROS	**470625**!
A54505	TROS	**472150**
A54506	TROS	**470565**!
A54506S	TROS	**470565**!
A54507	TROS	450533
A54507	TROS	**471224**!
A54507S	TROS	450533
A54507S	TROS	**471224**!
A54509	TROS	**471808**!
A54510	TROS	50560
A54511	TROS	**471267**!
A54511S	TROS	**471267**!
A54513	TROS	**472258**!
A54514	TROS	**412027**
A54515	TROS	**413246**
A54516	TROS	**471498**
A54518	TROS	**450588**
A54519S	TROS	471729
A54520	TROS	**474253**
A54521	TROS	**450593**!
A54523	TROS	**470596**
A54523S	TROS	**470596**
A54525	TROS	**450604**
A54525S	TROS	**450604**
A54526	TROS	**470606**!
A54528	TROS	**470390**
A54529S	TROS	**471224**!
A54531	TROS	**450621**
A54532	TROS	**470625**!
A54533S	TROS	**413248**
A54534	TROS	**473420**
A54536	TROS	50631
A54537	TROS	**471276**
A54538S	TROS	**472475**
A54540	TROS	**450639**
A54542	TROS	470645
A54543	TROS	**481073**
A54544	TROS	**471766**!
A54545	TROS	450655=
A54546	TROS	**470954**!
A54547S	TROS	**471570**!
A54548S	TROS	472020
A54549	TROS	**471737**
A54550	TROS	**410737**!
A54552	TROS	**474279N**
A54553S	TROS	**472018**
A54554	TROS	**471984**
A54555	TROS	**473240**!
A54557	TROS	**410737**!
A54558	TROS	**471862**
A54559	TROS	**471316**
A54561	TROS	**470764**!
A54561	TROS	50764
A54562	TROS	**450776**!
A545634	FRUEH	370036A
A545634	FRUEH	370349A
A54564	TROS	**471633**!
A54565	TROS	**471195**!
A54566S	TROS	**471466**!
A54567	TROS	50798
A54568	TROS	**480889**
A54569	TROS	450803
A54570S	TROS	**470806**
A54572	TROS	450808
A54576S	TROS	**473380**
A54577	TROS	**450819**
A54578S	TROS	**473454**
A54580S	TROS	**470898**
A54581	TROS	**473203**
A54582	TROS	450869
A54584	TROS	50883=
A54588	TROS	413479
A54589S	TROS	450908=
A54590S	TROS	**450911N**!
A54591	TROS	**473237**!
A54594S	TROS	**471736**
A54599S	TROS	**471564**
A54602	TROS	**410987**!
A54603	TROS	**473474**
A54604S	TROS	**480630**!
A54605	TROS	**474256**
A54608	TROS	**472185**!
A54611	TROS	**471653**!
A54614S	TROS	51032S
A54615	TROS	51039
A54616	TROS	**481792**
A54617S	TROS	**471571**
A54618S	TROS	**481073**
A54620P	TROS	**451078**!
A54621	TROS	**471413**!
A54622S	TROS	**472213**
A54624	TROS	**473228**
A54625	TROS	**471652**
A54625S	TROS	**471652**
A54626	TROS	**410825**
A54628	TROS	471707N
A54629	TROS	**451082**
A54630	TROS	**451182**
A54631	TROS	**480210**!

! Industrial Size/Type
= The U.S. customer service number is 877-4-TIMKEN. The Canadian customer service numbers are 800-565-4927 (English) and 800-565-0438 (French-Canadian).

Mfr. No.	Name	Zero Duplication or Recommended Industrial
A54635	TROS	51322
A54636	TROS	**411348**!
A54637	TROS	**484054**
A54638	TROS	**451583**!
A54639S	TROS	**471649**!
A55077	AMC	470059
A55077	AMC	**470380**!
A55432	CASE	**415449**!
A55446	CASE	**472185**!
A55599	US-EL	**450068**
A55663	CASE	**473234**!
A55755	CASE	**470774**!
A55817	CASE	**470565**=
A55832	CASE	**471870**!
A55855	CASE	**471224**!
A56003	TROS	**417073**
A56004	TROS	**415001**!
A56005	TROS	**415988**
A56006	TROS	**415458**!
A56006P	TROS	**415458**!
A56008	TROS	**417316**!
A56009	TROS	**455005**
A56010	TROS	**417344**!
A56010S	TROS	**417344**!
A56011	TROS	**415007**
A56013	TROS	**455008**
A56014	TROS	**415960**
A56015	TROS	**417485**
A56016	TROS	**416921**!
A56017	TROS	**416654**!
A56018	TROS	**415995**!
A56018S	TROS	**415995**!
A56020	TROS	**417487**
A56021	TROS	455015
A56022	TROS	**416288**
A56022S	TROS	**416288**!
A56023	TROS	**456105**
A56024	TROS	**476470**
A56025	TROS	**455019**!
A56026	TROS	455020
A56027	TROS	**415021**
A56028	TROS	370012A
A56029	TROS	**415023**
A56030	TROS	455024
A56031	TROS	**415025**
A56032	TROS	**455026**
A56033	TROS	**415027**
A56033S	TROS	**415027**
A56034	TROS	55028
A56035	TROS	370011A
A56036	TROS	55030
A56037	TROS	**416339**
A56037	TROS	455031!
A56038	TROS	**455032**!
A56039	TROS	**416345**!
A56039	TROS	455033
A56040	TROS	**415034**!
A56041	TROS	**415035**
A56041S	TROS	**415035**
A56042	TROS	**415036**
A56042S	TROS	**415036**
A56043	TROS	455037
A56044	TROS	**417512**
A56045	TROS	417513
A56046	TROS	**416891**!
A56047	TROS	**415041**
A56049	TROS	**415043**
A56050	TROS	**417514**
A56051	TROS	**415045**!
A56052	TROS	**417520**
A56053	TROS	**415047**
A56054	TROS	**417525**
A56055	TROS	**416892**
A56056	TROS	**417533**
A56057	TROS	**415371**
A56059	TROS	**415138**!
A56060	TROS	**417223**
A56063	TROS	455056
A56064	TROS	417516
A56065	TROS	**415058**
A56066	TROS	**417238**
A56067	TROS	370019A
A56068	TROS	**415351**!
A56069	TROS	370021A
A56070	TROS	457585
A56071	TROS	370021A
A56072	TROS	417536
A56073	TROS	**415066**
A56074	TROS	456890
A56075	TROS	**417269**!
A56076	TROS	**417273**
A56077	TROS	**416865**
A56077S	TROS	**416865**!
A56078	TROS	**417546**!
A56078S	TROS	**417546**!
A56079	TROS	**415072**
A56079S	TROS	**415072**
A56080	TROS	**416107**!
A56080	TROS	455073
A56080S	TROS	**416107**!
A56080S	TROS	455073
A56081	TROS	**415074**
A56082	TROS	**416476**!
A56083	TROS	**415076**
A56084	TROS	**415077**
A56085	TROS	**455079**!
A56086S	TROS	**455079**!
A56087	TROS	**455080**
A56088	TROS	**415082**
A56090	TROS	**416239**!
A56091	TROS	**415085**!
A56091	TROS	456648
A56092	TROS	**417487**
A56093	TROS	55087=
A56094S	TROS	**415088**
A56094S	TROS	**415088**!
A56095	TROS	**415090**
A56096	TROS	**416167**!
A56096S	TROS	**416167**!
A56097	TROS	**417596**
A56098	TROS	**411376**!
A56098S	TROS	**411376**!
A56099	TROS	**416444**
A56101	TROS	**416271**!
A56101S	TROS	**416271**!
A56102	TROS	**411245**!
A56103	TROS	**415302**
A56104	TROS	**416282**
A56105	TROS	417547
A56106	TROS	**415938**
A56107	TROS	**417556**
A56108	TROS	**416666**
A56109	TROS	**457874**
A56110	TROS	**417562**
A56111	TROS	**417563**
A56112	TROS	**416229**
A56113	TROS	**417298**
A56114	TROS	455310
A56115	TROS	**455584**
A56116	TROS	**416077**
A56117	TROS	**415116**
A56118	TROS	**455117**
A56119	TROS	**415551**
A56120	TROS	**417598**
A56121	TROS	**455406**!
A56122	TROS	**455121**
A56123	TROS	**417602**!
A56124	TROS	**455123**
A56125	TROS	**415124**
A56126	TROS	**417022**
A56127	TROS	**417604**
A56128	TROS	**417567**
A56129S	TROS	**415128**
A56130S	TROS	455129
A56131	TROS	**417474**
A56132	TROS	**455134**!
A56133	TROS	455136
A56134	TROS	**418028**
A56134S	TROS	**418028**
A56135	TROS	**417554**!
A56136	TROS	55141
A56137	TROS	**415142**
A56138	TROS	**455144**
A56139	TROS	**417172**
A56140	TROS	**415991**
A56140	TROS	455146!
A56140S	TROS	**415991**
A56140S	TROS	455146!
A56141	TROS	**415449**!
A56141S	TROS	**415449**!
A56142	TROS	**417366**!
A56143	TROS	**417343**!
A56144	TROS	**415150**!
A56145	TROS	**455151**
A56146	TROS	**417134**
A56147	TROS	**417486**
A56148	TROS	**417351**!
A56149	TROS	55155=
A56150	TROS	**417621**!
A56150S	TROS	**417621**!
A56151	TROS	**416292**
A56152S	TROS	**417488**!
A56153	TROS	**417171**!
A56154	TROS	417490
A56155	TROS	**417181**!
A56156S	TROS	**417491**
A56157	TROS	**412473**!
A56158	TROS	**417191**
A56158	TROS	455165!
A56159	TROS	**417492**
A56160	TROS	**417354**!
A56161	TROS	**417493**
A56162	TROS	**417196**!
A56163	TROS	**415711**
A56164	TROS	**416332**!
A56164S	TROS	**416332**!
A56165	TROS	**415437**!
A56165	TROS	**415437**
A56166	TROS	417497
A56167	TROS	**415937**!
A56168	TROS	**417501**
A56169	TROS	**415379**
A56169	TROS	**415379**!
A56170	TROS	455178=
A56171	TROS	**417210**!
A56172	TROS	417498
A56173	TROS	**417355**!
A56175	TROS	**417205**!
A56176	TROS	**417504**
A56177	TROS	**417211**!
A56177S	TROS	**417211**!
A56178	TROS	**417967**!
A56179	TROS	**415187**
A56180	TROS	**417356**!
A56180	TROS	455188
A56181S	TROS	**455189**
A56182	TROS	**455191**
A56183	TROS	**417357**
A56183	TROS	455192!
A56184	TROS	55193=
A56185	TROS	**455194**
A56186	TROS	**472157**!
A56186	TROS	**472157**
A56186S	TROS	**472157**
A56186S	TROS	**472157**!
A56187	TROS	**415196**!
A56187S	TROS	**415196**!
A56188	TROS	455197N
A56189	TROS	**415196**!
A56190	TROS	**416888**!
A56191	TROS	**417509**
A56192	TROS	455203
A56193	TROS	417515
A56194	TROS	**416137**
A56195	TROS	416144
A56196	TROS	**416149**
A56197	TROS	417526
A56198	TROS	**416154**!
A56198S	TROS	**416154**!
A56199	TROS	417534
A56200	TROS	**416158**
A56201	TROS	417535
A56202	TROS	**417247**!
A56203	TROS	416163
A56204	TROS	**417539**!
A56205	TROS	417267
A56206	TROS	55218=
A56207	TROS	**415219**
A56207S	TROS	**415219**
A56208	TROS	415871
A56209	TROS	**417606**
A56210	TROS	55222=
A56211	TROS	55223=
A56212	TROS	55224=
A56213	TROS	**417020**
A56214	TROS	**417570**
A56215	TROS	**415227**!
A56216	TROS	55228=
A56217	TROS	**415482**
A56219S	TROS	**416153**!
A56220	TROS	**417538**
A56221	TROS	**415234**!
A56222	TROS	55236
A56223	TROS	55238
A56224	TROS	55239=
A56225	TROS	55242
A56226	TROS	**417481**
A56229	TROS	417540
A56230	TROS	**412861**
A56231	TROS	**455249**!
A56232	TROS	**415303**!
A56233S	TROS	455251H
A56235	TROS	**455253**
A56236	TROS	**415254**
A56237	TROS	**417198**
A56239	TROS	**417252**
A56240	TROS	**415259**!
A56241	TROS	**455260**
A56243	TROS	**417496**
A56244	TROS	**415263**
A56244S	TROS	**415263**
A56245	TROS	**415867**
A56246	TROS	**416865**!
A56248	TROS	455267
A56249	TROS	55268
A56250	TROS	417502
A56251S	TROS	**417605**
A56252	TROS	**415725**!

! Industrial Size/Type

= The U.S. customer service number is 877-4-TIMKEN. The Canadian customer service numbers are 800-565-4927 (English) and 800-565-0438 (French-Canadian).

Mfr. No.	Name	Zero Duplication or Recommended Industrial
A56252S	TROS	**415725**!
A56253	TROS	**416706**!
A56253S	TROS	**416706**!
A56254	TROS	**417254**
A56256	TROS	55276=
A56258	TROS	**455280**
A56259	TROS	**417349**
A56261	TROS	**416364**!
A56261S	TROS	**416364**!
A56263	TROS	**416865**
A56264	TROS	**417602**!
A56267	TROS	455290
A56268	TROS	455292=
A56269	TROS	417584
A56270	TROS	**415294**!
A56270S	TROS	**415294**!
A56271	TROS	**415295**
A56272	TROS	**417082**
A56273	TROS	**455297**
A56275	TROS	**417600**
A56276	TROS	**417601**
A56277S	TROS	**55301S**
A56279	TROS	**476470**
A56280	TROS	**415991**
A56280	TROS	455146!
A56282	TROS	455308
A56283	TROS	55309=
A56284	TROS	455310
A56285	TROS	455311
A56286	TROS	**417278**
A56287	TROS	416670
A56288	TROS	**415984**!
A56289	TROS	55316=
A56290	TROS	415317
A56291	TROS	**417542**
A56292	TROS	**417495**
A56293	TROS	455321
A56294	TROS	**417484**!
A56294S	TROS	**417484**!
A56295	TROS	**417532**
A56296	TROS	**415327**
A56297	TROS	455328
A56298	TROS	55329=
A56299	TROS	**455330**!
A56300	TROS	**417191**
A56300	TROS	456585
A56302	TROS	55333=
A56305	TROS	**455336**
A56306	TROS	55337
A56308	TROS	**415991**
A56308	TROS	455146!
A56309	TROS	417494
A56310	TROS	417531
A56313	TROS	55346
A56314	TROS	**417159**
A56314S	TROS	**417159**
A56316	TROS	**415349**
A56317	TROS	**415350**
A56319	TROS	55353
A56320	TROS	**416404**!
A56321S	TROS	**417158**!
A56322	TROS	**455356**
A56323	TROS	55357
A56324	TROS	55358=
A56326	TROS	**417362**!
A56326S	TROS	**417362**!
A56327	TROS	**416664**!
A56327S	TROS	**416664**!
A56328	TROS	**327303**!
A56330	TROS	55367=
A56331	TROS	**415483**!
A56331S	TROS	**415483**!
A56332	TROS	**416273**!
A56333	TROS	417537
A56334S	TROS	**415371**
A56335	TROS	455375=
A56336	TROS	**417541**
A56337	TROS	**415284**
A56337S	TROS	**415284**
A56338	TROS	**415379**!
A56338	TROS	**415379**
A56338S	TROS	**415379**
A56338S	TROS	**415379**!
A56339	TROS	**410825**
A56342	TROS	**416956**
A56342S	TROS	**416956**
A56343	TROS	**475384**
A56345	TROS	55386
A56346	TROS	**415389**
A56348	TROS	55392=
A56349	TROS	**417511**
A56350	TROS	**415394**
A56351	TROS	**417549**!
A56352	TROS	**455396**
A56353	TROS	455397
A56355	TROS	455402=
A56356	TROS	**417551**
A56357	TROS	**417492**
A56358	TROS	417564
A56360	TROS	55431=
A56361	TROS	**455434**
A56362	TROS	455436=
A56363	TROS	**415437**
A56364	TROS	55441=
A56365	TROS	**472016**
A56367	TROS	**415447**
A56370S	TROS	**417597**
A56372	TROS	**455576**!
A56373	TROS	**455462**
A56374	TROS	**417550**
A56375	TROS	55469
A56376	TROS	**455471**
A56377	TROS	455472=
A56378	TROS	**417518**
A56380	TROS	455476
A56381	TROS	**417350**!
A56382	TROS	**455480**!
A56382S	TROS	**455480**!
A56383	TROS	417543
A56384	TROS	**415482**
A56386S	TROS	**415937**!
A56387S	TROS	**415937**!
A56388	TROS	**417555**!
A56390S	TROS	**417603**!
A56392	TROS	417548
A56392S	TROS	417548
A56394	TROS	**415498**
A56394S	TROS	**415498**
A56395	TROS	**418029**!
A56396	TROS	**455500**
A56397	TROS	55501=
A56398	TROS	**455583N**!
A56400	TROS	455509
A56401S	TROS	2081
A56403	TROS	370015A
A56404	TROS	**417507**
A56404S	TROS	**417507**
A56404S	TROS	**417507**!
A56408	TROS	55524
A56409	TROS	55532=
A56412	TROS	**455536**
A56413	TROS	55539=
A56416	TROS	370033A
A56416S	TROS	**415697**!
A56416S	TROS	455547
A56417	TROS	55548
A56419	TROS	455556
A56421S	TROS	417780
A56422	TROS	**415559**
A56425	TROS	**417433**
A56426	TROS	**455566**
A56426S	TROS	**455566**
A56430S	TROS	**417506**
A56431S	TROS	**455576**!
A56432	TROS	**415577**
A56434	TROS	370023A
A56435	TROS	**455583N**!
A56438S	TROS	455592
A56440	TROS	**416070**
A56442	TROS	55611=
A56443	TROS	455612=
A56444	TROS	**416294**!
A56445	TROS	455614
A56446	TROS	416029N!
A56447	TROS	455625=
A56449	TROS	**415085**!
A56449	TROS	456648
A56450	TROS	**415371**
A56451	TROS	55646=
A56453	TROS	455650=
A56455	TROS	**455655**!
A56456S	TROS	**416267**!
A56457	TROS	455661
A56458	TROS	**412473**!
A56459	TROS	**415683**
A56461	TROS	455685
A56463	TROS	**417353**!
A56464	TROS	**416297**
A56465	TROS	55692=
A56466S	TROS	**416364**!
A56469	TROS	370019A
A56470	TROS	**415960**
A56474	TROS	**416071**
A56476	TROS	455820
A56477	TROS	**417258**
A56478	TROS	**410825**
A56480	TROS	415832
A56481	TROS	**417604**
A56484	TROS	**415854**
A56485	TROS	**415857**!
A56486	TROS	**455858**
A56487	TROS	**417480**!
A56489	TROS	2055
A56492S	TROS	**415379**!
A56493S	TROS	416102
A56494	TROS	55199=
A56500S	TROS	**415958**
A56500S	TROS	**415958**!
A565634	FRUEH	370036A
A565634	FRUEH	370349A
A56626	CASE	**473234**=
A57230	CASE	**416294**!
A57231	CASE	J1123
A57246	CASE	9434=
A57247	CASE	5397$
A57250	CASE	5397
A57479	CASE	**411500**
A57501R	TROS	9613S
A57520S	TROS	**471652**
A57520S	TROS	482208!
A57647	CASE	**415559**
A57658	CASE	**476470**
A57697	CASE	J1105
A57699	CASE	**473454**
A5769L	CASE	J1105
A57708	CASE	**472164**!
A58223	CASE	**471271**!
A58428	CASE	472878
A5861AB	CASE	**474264**
A59046	CASE	416043
A59134	TROS	41257!
A59401K	TROS	5320=
A59760S	TROS	335924N
A598417	NEHO	370023A
A598417	SPERY	370023A
A59861S	TROS	**480821**!
A60003E	GMC	**471643**!
A60003F	GMC	**471643**!
A600B-202	CONTI	**410737**!
A600L-202	CASE	**473467**!
A600L-202	CONTI	**473467**!
A600L-202L	CONTI	**473467**
A600L-214	CONTI	**473467**!
A600L202	MASSE	**473467**!
A60106	TROS	8976S
A60108K	TROS	370012A
A6020A	GAL	**416271**!
A60382	OLIVE	**472924**!
A60536	CUMMI	**473229**
A60720K	TROS	5390
A60801S	TROS	**471538**
A61002G	TROS	730009
A61005G	TROS	730007
A61006G	TROS	730018
A61008G	TROS	730005
A61011G	TROS	730022
A61012G	TROS	730026
A61014G	TROS	733067
A61161	TROS	42101S
A614413	DCORP	**412119**!
A614418	DCORP	**472213**
A61442	DCORP	**471466**!
A614422	DCORP	**254270**
A614423	DCORP	**472258**!
A614436	DCORP	**473234**!
A614438	DCORP	**471750**!
A614444	DCORP	**471549**!
A614446	DCORP	**471231**!
A61445	DCORP	**481443**!
A61447	DCORP	472951
A61447	DCORP	**474252**
A61448	CASE	486857
A61448	DCORP	**471747**!
A61449	CASE	9943
A61449	DCORP	**473424**!
A61736	CASE	6597S
A61840S	TROS	**471539**!
A62049	CASE	**415458**!
A62050	CASE	714750
A620A	OLIVE	**412119**!
A62701P	TROS	**473454**
A6283	CASE	370051A
A62855	ALLCH	**473367**
A62855	ALLCH	**473367**!
A63102	TROS	8975S
A63201S	TROS	8477S
A63218	CASE	417123=
A63301S	TROS	9178S
A63601S	TROS	8804S=
A63701K	TROS	5337
A63720K	TROS	5095
A63860S	TROS	**470954**!
A63901S	TROS	**480581**
A63960	TROS	311189
A64002	TROS	HU019A
A64005	TROS	HU005A
A64006	TROS	HU008A
A64007	TROS	HU007A

! Industrial Size/Type $ F-M Number Is Part Of A Kit
= The U.S. customer service number is 877-4-TIMKEN. The Canadian customer service numbers are 800-565-4927 (English) and 800-565-0438 (French-Canadian).

Mfr. No.	Name	Zero Duplication or Recommended Industrial
A64008	TROS	HU008A
A64009	TROS	HU009A
A64009P	TROS	HU009A
A64011	TROS	HU011A
A64011P	TROS	HU011A
A64012	TROS	HU012A
A64013	TROS	HU013A
A64013P	TROS	HU013A
A64014	TROS	HU014A
A64014P	TROS	HU014A
A64019	TROS	HU019A
A64024	TROS	HU024A
A64025	TROS	HU036A
A64028	TROS	HU028A
A64031	TROS	HU031A
A64034	TROS	HU034A
A64034P	TROS	HU034A
A64036	TROS	HU036A
A64042	TROS	HU042A
A64046	TROS	HU110A
A64049	TROS	HU149A
A64050	TROS	HU042A
A64058P	TROS	HU058A
A64064	TROS	HU003A
A64065	TROS	HU065A
A64066	TROS	HU066A
A64075	TROS	H075
A64092	TROS	HU036A
A64093	TROS	HU110A
A64095	TROS	HU009A
A64096	TROS	HU066A
A64098	TROS	HU110A
A64099	TROS	HU036A
A64101S	TROS	8705S
A64160	TROS	8635S
A64201S	TROS	8594S
A64202S	TROS	8660S
A64220	TROS	9569S
A64360S	TROS	7686S
A64402P	TROS	8610
A64501R	TROS	**473179**
A64503S	TROS	**472299**
A64520S	TROS	**472354**!
A64540S	TROS	**415991**!
A64540S	TROS	**415991**
A64601S	TROS	**472082**
A64901S	TROS	8750S
A64965S	TROS	**471271**!
A64968S	TROS	**415458**!
A65003	TROS	386025A
A65003	TROS	**416158**
A65027	TROS	370106A
A65029	TROS	**415058**
A65054	TROS	**417506**
A65056	TROS	370003A
A65060	TROS	386025A
A65060	TROS	**416158**
A65065	TROS	370005A
A65067	TROS	370030A
A65070	TROS	370005A
A65072	TROS	370021A
A65073	TROS	370011A
A65073W	TROS	370011A
A65084	TROS	370019A
A65102S	TROS	8974S
A65103S	TROS	8975S
A65120S	TROS	4148
A65120S	TROS	**471424**!
A65121S	TROS	9339S
A65201S	TROS	8835S
A65202S	TROS	8940S
A65240S	TROS	8704S
A65261	TROS	370036A
A65261	TROS	370349A
A65262	TROS	AR10+370020A
A65263	TROS	370001A
A65270	TROS	**416892**
A65272	TROS	370021A
A65274	TROS	370005A
A65283	TROS	370006A
A65284	TROS	370019A
A65287	TROS	370007A
A65291	TROS	370012A
A65299	TROS	370057A
A65340S	TROS	8695S
A65360S	TROS	7687S
A65402P	TROS	**411330**!
A65501S	TROS	9449
A65502S	TROS	8792S
A65520S	TROS	**470687**
A65601P	TROS	3945
A65961	TROS	**412725**
A65961S	TROS	**412725**
A65963S	TROS	**476838**!
A65965S	TROS	**473234**
A65968S	TROS	**471567**!
A66120S	TROS	**472394**
A66123S	TROS	**472258**!
A66161S	TROS	1165
A66201S	TROS	9116S
A66202S	TROS	9195S=
A66203	TROS	9049
A66203	TROS	9049N
A66204S	TROS	9128S
A66340S	TROS	9342S
A66402P	TROS	2043
A66402S	TROS	2043
A66501S	TROS	**470530**!
A66520S	TROS	**473473**
A66540S	TROS	8935S
A66541S	TROS	**473234**!
A66581	DCORP	**473236**!
A66584	DCORP	**473234**!
A67150	CASE	476816=
A67367	CASE	**417509**
A675000AL513	GE	**416888**!
A676000AC111	GE	**451583**!
A676000AD155	GE	**481792**
A676000AD156	GE	**471652**
A676000AD157	GE	480482=
A676000AD161	GE	**471787**!
A676000AD162	GE	**471413**!
A676000AD163	GE	**471801**!
A676000AE212	GE	**470380**!
A676000AE213	GE	**473228**!
A676000AF251	GE	**472299**
A676000AF255	GE	**473230**!
A676000AF258	GE	**471829**
A676000AF260	GE	**472164**!
A676000AG302	GE	**473238**!
A676000AK454	GE	**415984**!
A676000AL508	GE	**416380**!
A676000AL513	GE	**416888**!
A67637	CASE	**417509**
A68103	TROS	HU013A
A69043	CUMMI	421
A693A	OLIVE	**411253**!
A693A	WHITE	**411253**!
A69503K	TROS	370013A
A69505K	TROS	386025A
A69505K	TROS	**416158**
A69506K	TROS	370029A
A69509K	TROS	370037A
A69509K	TROS	370338A
A69510K	TROS	370036A
A69510K	TROS	370349A
A69511K	TROS	370036A
A69511K	TROS	370349A
A69512K	TROS	370192A
A69513K	TROS	370004A
A69519K	TROS	AR2+370026A
A69520K	TROS	370065A
A69520K	TROS	376590A
A69521K	TROS	370107A
A69522K	TROS	370027A
A69535K	TROS	386025A
A69535K	TROS	**416158**
A69536K	TROS	370037A
A69536K	TROS	370338A
A69570K	TROS	370036A
A69570K	TROS	370349A
A69594K	TROS	AR2+370026A
A69596K	TROS	370065A
A69596K	TROS	376590A
A69597K	TROS	370036A
A69597K	TROS	370349A
A69598K	TROS	386025A
A69598K	TROS	**416158**
A69599K	TROS	370037A
A69599K	TROS	370338A
A69604K	TROS	AR5+370014A
A69605K	TROS	AR4+370011A
A69608K	TROS	370015A
A69609K	TROS	370124A
A69611K	TROS	**418028**
A69612K	TROS	**417134**
A69616K	TROS	370007A
A69619K	TROS	370007A
A69621K	TROS	AR+370018A
A69622K	TROS	AR6+370012A
A69624K	TROS	370012A
A69625K	TROS	AR7+370012A
A69626K	TROS	370001A
A69628K	TROS	AR12+370033A
A69629K	TROS	AR10+370020A
A69637	TROS	370002A
A69637K	TROS	370002A
A69639K	TROS	370054A
A69640K	TROS	370057A
A69643K	TROS	370131A
A69688K	TROS	370002A
A69689K	TROS	AR4+370011A
A69690K	TROS	370007A
A69691K	TROS	370015A
A69693K	TROS	370012A
A69695K	TROS	370064A
A69696K	TROS	370131A
A69698K	TROS	AR10+370020A
A69699K	TROS	370001A
A69701K	TROS	AR20+370004A
A69702K	TROS	**416892**
A69703K	TROS	370021A
A69705K	TROS	370033A
A69707K	TROS	370030A
A69711K	TROS	370008A
A69713K	TROS	370027A
A69714K	TROS	370005A
A69716K	TROS	370006A
A69717K	TROS	370019A
A69718K	TROS	370019A
A69719K	TROS	370006A
A69724K	TROS	370036A
A69724K	TROS	370349A
A69725K	TROS	370047A
A69728K	TROS	370033A
A69730K	TROS	370046A
A69731K	TROS	370191A
A69742K	TROS	370003A
A69743K	TROS	370106A
A69745K	TROS	**415058**
A69746K	TROS	370069A
A69746K	TROS	380069A
A69750K	TROS	**416865**
A69754K	TROS	370023A
A69754K	TROS	**415958**
A69754K	TROS	**417505**
A69755K	TROS	**417506**
A69756K	TROS	370003A
A69757K	TROS	370005A
A69758K	TROS	**415058**
A69759K	TROS	370121A
A69781K	TROS	370069A
A69781K	TROS	380069A
A69782K	TROS	370121A
A69783K	TROS	AR20+370004A
A69785K	TROS	370047A
A69787K	TROS	**417506**
A69788K	TROS	**415058**
A69789K	TROS	370006A
A69790K	TROS	370036A
A69790K	TROS	370349A
A69791K	TROS	370021A
A69792K	TROS	370019A
A69793K	TROS	**416892**
A69794K	TROS	370023A
A69794K	TROS	**417505**
A69795K	TROS	370030A
A69798K	TROS	370005A
A7001	MERCM	**471692**!
A7018	MERCM	**471472**!
A7090	CASE	**470954**
A7144	CASE	**473227**
A7146	CASE	**471504**!
A7184	FORD	410059
A7184	FORD	**470380**!
A7201	FORD	**473459**
A72069	TROS	**471192**
A72077S	TROS	75251S
A73015	TROS	200600
A73017	TROS	80313
A73019	TROS	200640
A73025	TROS	7208S
A73029	TROS	200642
A74002	TROS	**450040**
A74003	TROS	**473367**
A74004	TROS	**473228**!
A74008	TROS	**472287**!
A74010	TROS	**473010**!
A74012	TROS	**415449**!
A74013	TROS	**417344**!
A74014	TROS	**416444**
A74015	TROS	**415449**!
A74017	TROS	**415379**
A74019	TROS	**416666**
A74023	TROS	**416865**!
A75006S	TROS	240009
A75012S	TROS	**481537**
A75013S	TROS	340771
A75016S	TROS	45637S
A75233	CASE	**415449**!
A7597	AM CA	473453
A76002S	TROS	200110
A76004	TROS	204008
A76005S	TROS	203003
A76006S	TROS	203003
A76008S	TROS	203006!
A76010S	TROS	203008
A76011S	TROS	203012

! Industrial Size/Type
= The U.S. customer service number is 877-4-TIMKEN. The Canadian customer service numbers are 800-565-4927 (English) and 800-565-0438 (French-Canadian).

Mfr. No.	Name	Zero Duplication or Recommended Industrial
A76012S	TROS	203013
A76013S	TROS	203016
A76014	CASE	**470898**
A76014S	TROS	203025
A76015S	TROS	203029
A76016S	TROS	45637S
A76017S	TROS	204002
A76021S	TROS	204008
A76024S	TROS	204013
A76025S	TROS	204017
A76026S	TROS	204020
A76026S	TROS	204505!
A76028S	TROS	204035
A76216	CASE	**473459**
A76272	CASE	5164=
A7662	AM CA	**471504!**
A7717	CLARK	**415483!**
A778	WILYS	**471413**
A779	WILYS	40576S
A7792	CASE	**415449!**
A78003	TROS	205004
A78004	TROS	203005!
A78004	TROS	205005
A78010	TROS	205015
A78012	TROS	204020
A78012	TROS	204505!
A78013	TROS	205035
A78014	TROS	205044
A78016S	TROS	**472144!**
A78017S	TROS	210914
A78018S	TROS	210945
A78019S	TROS	**411376!**
A78021S	TROS	**415449!**
A78022S	TROS	**417343!**
A78023S	TROS	**412473!**
A78024S	TROS	**415725!**
A78026S	TROS	**471554!**
A78029S	TROS	**471224!**
A78031S	TROS	**471689!**
A78033S	TROS	**472164!**
A78034S	TROS	**472299**
A78036S	TROS	**471829**
A78037S	TROS	**415458!**
A78038S	TROS	**417487!**
A78038S	TROS	**417487**
A78039S	TROS	415146!
A78039S	TROS	**415991**
A78040S	TROS	**415984!**
A7870	CASE	**415036**
A7889	CASE	**415036**
A79011P	TROS	**410737!**
A79012S	TROS	**417487!**
A79012S	TROS	**417487**
A79013S	TROS	**415984!**
A79016S	TROS	**416404!**
A79017S	TROS	**415498**
A79018S	TROS	**416500**
A7963619	ACF	240736
A80011S	TROS	240007=
A80013S	TROS	240009
A80016S	TROS	240023
A80019S	TROS	240119
A80021S	TROS	240151
A80026S	TROS	240215
A80027S	TROS	240319
A80028S	TROS	240356
A80031S	TROS	6703S
A80032S	TROS	240414
A80034S	TROS	240435
A80035S	TROS	240457
A80036S	TROS	240462
A80037S	TROS	240470
A80038S	TROS	6597S
A80040S	TROS	240698
A80041S	TROS	240716
A80042S	TROS	240731
A80044S	TROS	240733
A80045S	TROS	240735
A80046S	TROS	240736
A80049S	TROS	240816
A80050S	TROS	240949
A80052S	TROS	**471076**
A805F-104	ROCKW	**472439**
A805F-108	ROCKW	**410308!**
A805F-110	ROCKW	**410825**
A805F-111	ROCKW	**470530!**
A805F-118	ROCKW	**473238!**
A805F-120	ROCKW	**410737!**
A805F-121	ROCKW	**472924!**
A805F-124	ROCKW	**472492!**
A805F-125	ROCKW	**471271!**
A805F-126	ROCKW	**417600**
A805F-133	ROCKW	**470954**
A805F-134	ROCKW	340853
A805F-136	ROCKW	**455330!**
A805F-139	ROCKW	450803
A805F-141	ROCKW	**417171!**
A805F-143	ROCKW	**471820**
A805F-144	ROCKW	**410102**
A805F-148	ROCKW	**472018**
A805F-154	ROCKW	**417597**
A805F-156	ROCKW	**455480!**
A805F-161	ROCKW	**415938**
A805F-165	ROCKW	**470565!**
A805F-167	ROCKW	**415371**
A805F-169	ROCKW	**417967!**
A805F-173	ROCKW	**473244**
A805F-174	ROCKW	**415854**
A805F-179	ROCKW	**415090**
A805F-183	ROCKW	**417602!**
A805F-187	ROCKW	**417570**
A805F-190	ROCKW	**412871!**
A805F-191	ROCKW	**470898**
A805F-192	ROCKW	**472299**
A805F-194	ROCKW	455476
A805F-195	ROCKW	**470565!**
A805F-199	ROCKW	**450090**
A805F-201	ROCKW	455251H
A805F-205	ROCKW	**417555!**
A805F-208	ROCKW	**415447**
A805F-210	ROCKW	**415379**
A805F-215	ROCKW	**450362**
A805F-218	ROCKW	**412861**
A805F-220	ROCKW	**456105**
A805F-60	ROCKW	**417205!**
A805F-69	ROCKW	**472439**
A805F-91	ROCKW	**415447**
A805F130	ROCKW	**471192**
A805F132	ROCKW	**471689!**
A805F135	ROCKW	**470764!**
A805F135	ROCKW	50764
A805F193	ROCKW	**470764!**
A805F193	ROCKW	50764
A81012	TROS	**470530!**
A81019	TROS	**415995!**
A81019	TROS	**415995!**
A81021	TROS	**417211!**
A81022	TROS	**415437**
A81023	TROS	**412473!**
A81044	TROS	**473448**
A81045	TROS	**471652**
A81054	TROS	291295
A81066	TROS	8976S
A81067	TROS	**418028**
A81100S	TROS	**471267!**
A81101S	TROS	**331107N**
A81102S	TROS	**473231!**
A81103S	TROS	331173
A81104R	TROS	331227H
A81105S	TROS	331228H
A82139	BENDI	**415027!**
A82139	BENDI	**415027**
A82170	C-W	**472924!**
A8225	CASE	**471646!**
A828	FMC	**330385**
A83000S	TROS	**471466**
A83002S	TROS	**471224!**
A83003S	TROS	340136
A83004S	TROS	**470954!**
A83005S	TROS	**472560N**
A83009S	TROS	340210
A83010S	TROS	**471643!**
A83011S	TROS	340356
A83012S	TROS	**350364**
A83013S	TROS	**330385**
A83014S	TROS	**471267!**
A83015S	TROS	340400
A83016S	TROS	340413
A83018S	TROS	**481537**
A83020S	TROS	**254270**
A83022S	TROS	340724!
A83023S	TROS	340771
A83024S	TROS	340787
A83025S	TROS	340797
A83026S	TROS	340815
A83027S	TROS	340817
A83028S	TROS	340823
A83029S	TROS	340835
A83030S	TROS	340853
A83031S	TROS	340872
A83033S	TROS	340900
A83034S	TROS	340927
A83035S	TROS	340930
A83037S	TROS	341022
A83039S	TROS	345035
A83040S	TROS	345146
A83041	TMTR	**482253**
A83161	TMTR	**416130!**
A83173	TMTR	**416270**
A84001S	TROS	**471413!**
A84004S	TROS	350156
A84004S	TROS	**473096**
A84005S	TROS	**481443!**
A84006S	TROS	**471646!**
A84007S	TROS	**471689!**
A84008S	TROS	**481163!**
A84009S	TROS	**471538**
A84011S	TROS	**350364**
A84013S	TROS	**330385!**
A84014S	TROS	**473227**
A84016S	TROS	**472311!**
A84019S	TROS	**474272**
A84020S	TROS	**471267!**
A84021S	TROS	**473454**
A84022S	TROS	**473424!**
A84023S	TROS	**471765!**
A84024S	TROS	350909
A84024S	TROS	**471224!**
A84025S	TROS	**473241**
A84026S	TROS	**350936**
A84027S	TROS	350942
A84028A	TROS	**350974!**
A84030S	TROS	351028
A84033S	TROS	**415082**
A84034S	TROS	**416271!**
A84035S	TROS	355200
A84035S	TROS	**416888!**
A84036S	TROS	**417350!**
A84038S	TROS	355732
A84040S	TROS	**327303!**
A84833	CATER	J1128
A84833	TMTR	J1128
A85001S	TROS	**470898**
A85004S	TROS	**415458!**
A85005S	TROS	**417344!**
A85007S	TROS	**415027**
A85010S	TROS	**417357**
A85011P	TROS	415983N!
A85012S	TROS	**412920**
A85015S	TROS	203006!
A85017S	TROS	441319
A85019S	TROS	**472016**
A85024S	TROS	**451143**
A85025R	TROS	**472164**
A85036S	TROS	**471341!**
A85037S	TROS	**471827**
A85042P	TROS	**473452**
A85047S	TROS	**471195!**
A85072S	TROS	**472258!**
A85080R	TROS	**415379!**
A86022	TROS	5M81
A86029	TROS	5M89
A86072	TROS	5M289
A86073	TROS	5M293
A86085	TROS	5M356
A86090	TROS	370002A
A86098	TROS	5M403
A86099	TROS	5M406=
A86107	TROS	5M445
A86120	TROS	5M466
A86134	TROS	5M497
A86135	TROS	370002A
A86142	TROS	5M544
A86143	TROS	5M559
A86144	TROS	5M643
A86160	TROS	5M867
A86177	TROS	5MR71
A86178	TROS	5MR1008
A86179	TROS	5MR1009
A86184	TROS	5MR1300
A86185	TROS	5MR1301
A86200S	TROS	9911S
A86201S	TROS	9913
A86203S	TROS	9845
A86206S	TROS	9487
A86207S	TROS	3604
A86209S	TROS	9912
A86210S	TROS	5123
A86211S	TROS	5109
A86215K	TROS	5092
A86216K	TROS	5111
A86216K	TROS	5111S
A86217K	TROS	5112
A86217K	TROS	5112S
A86218K	TROS	5390
A86219K	TROS	5095
A86220K	TROS	5116
A86225S	TROS	2146
A86227S	TROS	9449
A86230K	TROS	5072
A86232S	TROS	9487
A86233P	TROS	8460N
A86234K	TROS	5073
A86237S	TROS	2146
A86250S	TROS	332134
A86255S	TROS	4250
A86256S	TROS	9864S
A86285S	TROS	**415995!**

! Industrial Size/Type
= The U.S. customer service number is 877-4-TIMKEN. The Canadian customer service numbers are 800-565-4927 (English) and 800-565-0438 (French-Canadian).

Mfr. No.	Name	Zero Duplication or Recommended Industrial
A86285S	TROS	415995!
A86287S	TROS	416706!
A86289S	TROS	472397!
A86290S	TROS	470605!
A86291S	TROS	471344
A86293S	TROS	471763
A86297S	TROS	416273
A86303S	TROS	2689S
A86310	TROS	471646!
A86312	TROS	471413!
A86313	TROS	471413!
A86314	TROS	5131
A86315	TROS	470625!
A86317	TROS	350936
A86318	TROS	5121
A86320	TROS	410308!
A86321	TROS	416273
A86323	TROS	417487
A86325K	TROS	5117
A86326K	TROS	5127
A86355S	TROS	471689!
A86358P	TROS	473010
A864	WILYS	40566S
A86423S	TROS	471442!
A86424	TROS	471442!
A86426S	TROS	471526!
A86429S	TROS	471526!
A86430S	TROS	471526!
A86431	TROS	471526!
A86440S	TROS	471530
A86447S	TROS	472705!
A86449S	TROS	471281!
A86464S	TROS	471466!
A86466S	TROS	471466!
A86468S	TROS	471466!
A86470	TROS	471466!
A86471S	TROS	471466!
A86473S	TROS	471264!
A86475S	TROS	471264!
A86477S	TROS	471255!
A86479S	TROS	471564
A86484S	TROS	481528
A86486S	TROS	481397
A86487S	TROS	481397
A86495S	TROS	471538!
A86497S	TROS	471538!
A86500S	TROS	471553!
A86501S	TROS	471553!
A86514S	TROS	470954!
A86517S	TROS	470954!
A86523S	TROS	471554!
A86530S	TROS	471567!
A86532S	TROS	471567!
A86540S	TROS	471643!
A86541	TROS	471643!
A86554	TROS	481443!
A86555S	TROS	481443!
A86562	TROS	481644
A86564S	TROS	481644
A86573S	TROS	471539!
A86575S	TROS	471539!
A86579S	TROS	471231!
A86581	TROS	471231!
A86584	TROS	471686
A86597S	TROS	471267!
A86598S	TROS	471267!
A86605	TROS	471570!
A86606S	TROS	471570!
A86607S	TROS	471570!
A86614S	TROS	471633!
A86616	TROS	471646!
A86624	TROS	471571
A86626	TROS	472324!
A86627	TROS	472324!
A86628	TROS	472324!
A86629	TROS	472324!
A86643	TROS	471224!
A86644S	TROS	471224!
A86645S	TROS	471224!
A86647S	TROS	471224!
A86650S	TROS	471224!
A86652	TROS	471224!
A86654S	TROS	471270!
A86657S	TROS	471649!
A86659	TROS	471649!
A86660S	TROS	471649!
A86670S	TROS	471733
A86674S	TROS	471744!
A86676S	TROS	471760
A86677S	TROS	471760
A86689	TROS	480210!
A86705S	TROS	471652
A86706S	TROS	471652
A86710S	TROS	471692!
A86712	TROS	471692!
A86717S	TROS	471763
A86718	TROS	473259
A86725S	TROS	470328
A86725S	TROS	481213!
A86728S	TROS	472475
A86741S	TROS	471413!
A86743S	TROS	471737
A86747S	TROS	471750!
A86749S	TROS	471766
A86750S	TROS	471766!
A86760S	TROS	471787!
A86774S	TROS	473210
A86776	TROS	473210
A86790S	TROS	472354!
A86795	TROS	472258!
A86797S	TROS	470380!
A86799S	TROS	471192
A86803S	TROS	471192
A86819	TROS	471835!
A86850	TROS	473231
A86865	TROS	291099
A86866	TROS	470487!
A86875S	TROS	472299
A86888S	TROS	481181!
A86914S	TROS	473234!
A86928S	TROS	340400
A86931	TROS	450400
A86956	TROS	472179
A86962S	TROS	471141!
A86973S	TROS	473451!
A87011	TROS	473462
A87012	TROS	450965
A87014	TROS	417474
A87025S	TROS	6703S
A87027	TROS	472082
A87028	TROS	472924!
A87030S	TROS	472397!
A87031	TROS	40301S
A87038	TROS	473464
A87051	TROS	5756
A87054	TROS	41013S
A87064	TROS	410308
A87071	TROS	473471
A87076S	TROS	341022
A87084S	TROS	471272!
A87087S	TROS	471341!
A87094	TROS	411253!
A87098S	TROS	442874
A87114S	TROS	40101S
A87128S	TROS	40337S
A87131S	TROS	472029
A87138S	TROS	470605!
A87139S	TROS	415449!
A87142	TROS	415001!
A87146	TROS	416273!
A87156S	TROS	451143
A87159	TROS	413248
A87161	TROS	417079
A87164	TROS	415458!
A87189S	TROS	416654
A87190S	TROS	416654
A87205	TROS	416404!
A87207	TROS	370046A
A87214	TROS	476470
A87217	TROS	418028
A87217	TROS	455137!
A87218S	TROS	418028
A87218S	TROS	455137!
A87219	TROS	418028
A87219	TROS	455137!
A87220	TROS	416292
A87221	TROS	415085!
A87221	TROS	456648
A87224	TROS	417191
A87224	TROS	455165!
A87225S	TROS	416327
A87232S	TROS	415991
A87232S	TROS	415991!
A87233S	TROS	415991!
A87233S	TROS	415991
A87235	TROS	55028
A87242	TROS	416919
A87245	TROS	416339
A87245	TROS	455031!
A87246S	TROS	416345!
A87246S	TROS	455033
A87249	TROS	45187S
A87253S	TROS	471472!
A87256S	TROS	455194
A87259	TROS	472157!
A87259	TROS	472157
A87265S	TROS	6597S
A87267	TROS	416888!
A87275	TROS	415725!
A87277S	TROS	416865!
A87292	TROS	240319
A87293S	TROS	470954!
A87294S	TROS	471643!
A87295S	TROS	471643!
A87300S	TROS	472354!
A87301S	TROS	472354!
A87303S	TROS	471827!
A87304S	TROS	1192
A87313S	TROS	340853
A87339S	TROS	472560N
A87367S	TROS	472705!
A87369S	TROS	7188S
A87372S	TROS	470954!
A87373S	TROS	470954!
A87918	TMTR	470712!
A8926	CASE	415988
A8926X	CASE	415988
A89569	US-EL	471821!
A89570	US-EL	473179!
A8Q7274A	FORD	471231!
A8TZ1175A	FORD	410987!
A8TZ1175B	FORD	410987!
A90830	CATER	470712!
A90830	TMTR	470712!
A912542	FALKC	413247!
A91615	TMTR	471737
A92842	OLIVE	417316!
A9288	BUTBN	40337S
A95018	AM CA	472185!
A95123	AM CA	415449!
A95155	AM CA	417073
A95161	AM CA	473227
A95166	AM CA	471868
A95169	AM CA	417344!
A95213	AM CA	415984!
A95215	AM CA	473238
A95296	AM CA	471705!
A95300	AM CA	416654!
A95301	AM CA	472560N!
A958	WILYS	473229
A9733051	KELSE	45031S
A974	WILYS	471466!
A9AZ7288A	FORD	340797
A9LY7052A	FORD	7300S
A9LY7052B	FORD	473235!
AA0462E0	NOK	471549!
AA0462E0	NOK	471549*
AA10570	JOHND	45013S
AA1175A	FORD	415960!
AA1175AR	FORD	455008
AA1430E	NOK	471649!
AA1443B	OLIVE	417356!
AA1443B	OLIVE	455188
AA1443C	OLIVE	472157
AA1443C	OLIVE	472157!
AA1443E0	NOK	471733
AA15M200	CONTI	343185
AA15M201	CONTI	471267!
AA15M202	CONTI	343185
AA1841F0	NOK	471766!
AA1841F0	NOK	471766*
AA1999E	NOK	472354!
AA2162E0	NOK	36X50X7!
AA2222E0	NOK	38X52X8.5
AA2276E0	NOK	473227!
AA2291E0	NOK	471344
AA2293E0	NOK	473228!
AA2296R	JOHND	472287!
AA2342Y0	NOK	224015
AA2342Y0	NOK	40X52X7!
AA2464E0	NOK	473367*
AA2464E0	NOK	473367!
AA2580E0	NOK	473237!
AA2593E0	NOK	472193*
AA2593E0	NOK	472193!
AA2599E0	NOK	472179
AA2773E0	NOK	224820
AA2773Y0	NOK	224820
AA2847Y0	NOK	225020
AA2847Y0	NOK	50X68X8!
AA2928E0	NOK	470530
AA2929E	NOK	470530!
AA2934E0	NOK	472397!
AA2942E0	NOK	410102
AA2990F0	NOK	340900
AA2994F0	NOK	470898
AA3001E0	NOK	410308!
AA3132E0	NOK	411253!
AA3132G0	NOK	411253!
AA3257E0	NOK	412119!
AA3262E0	NOK	410686N
AA3266E0	NOK	415857!
AA3267F0	NOK	410825
AA3333Z1	NOK	472029
AA3339E0	NOK	471271!
AA3346E0	NOK	415449
AA3349E0	NOK	415449!
AA3357E0	NOK	455079!

! Industrial Size/Type * Minor Width Difference

Mfr. No.	Name	Zero Duplication or Recommended Industrial
AA3439G0	NOK	415458!
AA3479E	NOK	416664!
AA3487E0	NOK	416282
AA3606	DIA	455189
AA3654E0	NOK	100495
AA3654E0	NOK	417349
AA3665F0	NOK	415995!
AA3665F0	NOK	415995*
AA3665FA	NOK	415995!
AA3738R	JOHND	471554!
AA3796E0	NOK	476470
AA4183E0	NOK	416891!
AA4245AR	FORD	473367!
AA4245AR	FORD	473367
AA4432E1	NOK	417541
AA4525F	NOK	416107!
AA4686	FORD	471750!
AA4700	FORD	474281!
AA4700R	FORD	474281!
AA487R	JOHND	416282
AA502R	JOHND	476470
AA505	JOHND	476470
AA506	JOHND	416282
AA510R	JOHND	417316!
AA520	JOHND	417316!
AA5247R	JOHND	472560N!
AA5506R	JOHND	471271!
AA5607R	JOHND	240731
AA5613	JOHND	471267!
AA5613R	JOHND	471267!
AA620A	GAL	416271!
AA620A	HOUGH	416271!
AA620A	OLIVE	416271!
AA6605R	JOHND	470898
AA6606R	JOHND	471271!
AA663	JOHND	5M356
AA6732Y0	NOK	1950
AA6867E0	NOK	352637
AA6922E	NOK	471733*
AA7032F0	NOK	470059
AA7032F0	NOK	470380!
AA7075E0	NOK	470328
AA7075E0	NOK	481213!
AA7304E0	NOK	473214!
AA7305E0	NOK	412028
AA7323E0	NOK	470950!
AA7325E0	NOK	40389S
AA7326E0	NOK	471516!
AA7373E0	NOK	473458!
AA7411E0	NOK	456105
AA7412E0	NOK	476470
AA7594E0	NOK	472636*
AA7594E0	NOK	472636!
AA7600E0	NOK	471870*
AA7600E0	NOK	471870!
AA7601E0	NOK	473517!
AA7602E0	NOK	471192
AA7603E0	NOK	450492
AA7624E0	NOK	416404!
AA7626E0	NOK	417159
AA7652E0	NOK	472924!
AA7652E0	NOK	472924*
AA7652F0	NOK	472924*
AA7652F0	NOK	472924!
AA7681E0	NOK	450593
AA7681E0	NOK	450593!
AA7687E0	NOK	417474
AA7711E0	NOK	471750!
AA7723E0	NOK	415254
AA7820E0	NOK	416271!
AA7853E	NOK	417357!
AA7853E	NOK	455192*
AA7865E0	NOK	450621
AA7914E0	NOK	416125!
AA7B237	CONTI	471267!
AA7C200	CONTI	481443!
AA7C204	CONTI	417267
AA8006E0	NOK	471692*
AA8006E0	NOK	471692!
AA8007E0	NOK	473215
AA8007F0	NOK	473215!
AA8012E0	NOK	410496
AA8012E0	NOK	410496!
AA8019E0	NOK	410102
AA8020E0	NOK	413246!
AA8020E0	NOK	413246
AA8022E0	NOK	474255
AA8056E0	NOK	471619*
AA8056E0	NOK	471619!
AA8061E0	NOK	412920!
AA8072E0	NOK	471567!
AA8098E0	NOK	226285
AA8098E0	NOK	62X85X8!
AA8222E0	NOK	417344
AA8223E0	NOK	455858
AA8360E0	NOK	471692!
AA8367E0	NOK	471138=
AA8376E0	NOK	55337
AA8425E0	NOK	451030=
AA8440E0	NOK	473454
AA8511E0	NOK	415960
AA8524E0	NOK	473258!
AA8531E0	NOK	415234!
AA8586E0	NOK	455251H
AA8739E0	NOK	471643!
AA8765E0	NOK	473367*
AA8765E0	NOK	473367!
AA8768E0	NOK	416154!
AAA397A0	NOK	62X85X8!
AAL0088	LEYLD	370003A
AAX29789	JOHND	471267!
AAX43052	JOHND	472287!
AAX82739	JOHND	476838!
AAX87908	JOHND	472354!
AAX90840	JOHND	472560N!
AAX92035	JOHND	472070
AAX92755	JOHND	472258
AAX92789	JOHND	471267!
AB0067E	NOK	350435
AB0067E0	NOK	350435
AB0205E0	NOK	9X22X7
AB0223E0	NOK	330385!
AB0224G0	NOK	330385!
AB0327E0	NOK	50199S!
AB0327E0	NOK	6863S!
AB0371E0	NOK	12X22X7!
AB0387E0	NOK	12X28X7
AB0450E0	NOK	471442!
AB0456F0	NOK	471526!
AB0456G0	NOK	471526!
AB0462E0	NOK	471549*
AB0462E0	NOK	471549!
AB0478E	NOK	14X24X7!
AB0478E0	NOK	13X28X7!
AB0514E0	NOK	221410
AB0526E0	NOK	14X30X7
AB0545E	NOK	472705!
AB0552F	NOK	472705!
AB0592E0	NOK	15X28X7
AB0598E0	NOK	221540
AB0604E0	NOK	15X32X8
AB0610E0	NOK	15X35X7
AB0645F0	NOK	471466!
AB0654E0	NOK	471264!
AB0654F0	NOK	471264!
AB0657E0	NOK	471255!
AB0678E0	NOK	16X26X7
AB0678QE	NOK	16X26X7
AB0685E0	NOK	221610
AB0687E0	NOK	16X30X7
AB0688E0	NOK	16X30X7
AB0698E0	NOK	16X35X7
AB0712E0	NOK	481073
AB0721E0	NOK	481481
AB0722F0	NOK	481481
AB0736F0	NOK	221710
AB0742G0	NOK	221720
AB0745G0	NOK	17X30X7
AB0751E0	NOK	221730
AB0759E0	NOK	17X35X7
AB0771E1	NOK	17X40X7
AB0788E	NOK	471553!
AB0788E	NOK	471553*
AB0788E1	NOK	471553!
AB0788E1	NOK	471553*
AB0816E0	NOK	221820
AB0817E0	NOK	221820
AB0829E0	NOK	18X35X7
AB0831E0	NOK	18X35X7
AB0875E0	NOK	19X35X10!
AB0896E0	NOK	254270!
AB0898E	NOK	254270!
AB0898E0	NOK	1049
AB0909F	NOK	470954!
AB0909F0	NOK	470954!
AB0909F1	NOK	470954
AB0913E0	NOK	470954!
AB0913F	NOK	470954!
AB0913F0	NOK	470954!
AB0913G0	NOK	470954!
AB0915F	NOK	470954
AB0923F0	NOK	471554!
AB0923H0	NOK	471554!
AB0938E0	NOK	471643!
AB0984H0	NOK	20X30X7
AB0987E0	NOK	20X30X7
AB0997E0	NOK	222020
AB1012E0	NOK	222030
AB1013E0	NOK	222030
AB1029E0	NOK	222050
AB1030E0	NOK	222050
AB1032E0	NOK	20X40X10
AB1033F0	NOK	20X40X10
AB1116E0	NOK	222210
AB1126E	NOK	22X35X7
AB1126E0	NOK	222220
AB1127E0	NOK	222220
AB1145E0	NOK	22X42X10
AB1148E0	NOK	22X42X10
AB1172E0	NOK	7840S
AB1172F0	NOK	7840S
AB1181E0	NOK	471267!
AB1181F0	NOK	471267!
AB1182F0	NOK	471267
AB1184G0	NOK	471267!
AB1192E0	NOK	350877
AB1192E0	NOK	471633!
AB1194E0	NOK	471646!
AB1232E0	NOK	471571
AB1255E0	NOK	24X38X7
AB1260E0	NOK	24X40X7!
AB1274E0	NOK	471648
AB1274F0	NOK	471648=
AB1292E	NOK	222510
AB1292E	NOK	25X35X7!
AB1292W	NOK	222510
AB1292W0	NOK	222510
AB1294F0	NOK	25X35X7!
AB1306E0	NOK	222535
AB1307E0	NOK	222535
AB1314F0	NOK	222540
AB1315E0	NOK	222540
AB1322E0	NOK	25X42X10
AB1334F0	NOK	25X45X8
AB1335F0	NOK	25X45X8
AB1337F0	NOK	25X45X8
AB1338E0	NOK	25X45X8
AB1348E0	NOK	25X47X7
AB1361E0	NOK	25X50X10
AB1363E0	NOK	25X50X10
AB1374E	NOK	25X52X8
AB1374E0	NOK	25X52X10
AB1374E0	NOK	25X52X7!
AB1377E	NOK	25X52X8
AB1377E0	NOK	25X52X10
AB1377E0	NOK	25X52X7!
AB1379E0	NOK	25X52X10
AB13C200	CONTI	471267!
AB13C201	CONTI	471466!
AB13S204	CONTI	350364
AB1402E0	NOK	252277*
AB1403E0	NOK	252277
AB1403E1	NOK	252277
AB1408E0	NOK	472311!
AB1410E2	NOK	471224!
AB1410F0	NOK	471224!
AB1411E0	NOK	471224!
AB1426E0	NOK	471270!
AB1427E0	NOK	471270!
AB1463E0	NOK	26X38X5!
AB1468E	NOK	471076
AB1468E0	NOK	26X40X7!
AB1468E0	NOK	471076
AB1474F0	NOK	26X42X10
AB1486E	NOK	481650
AB1486E0	NOK	481650
AB1518E0	NOK	27X47X10
AB1531E0	NOK	28X38X7
AB1532E1	NOK	28X38X7
AB1538E0	NOK	222820
AB1538E0	NOK	28X40X7!
AB1546G1	NOK	222835
AB1598E0	NOK	3638
AB1598E0	NOK	471652
AB1600G0	NOK	471652
AB1610E	NOK	476838!
AB1610E0	NOK	476838!
AB1617E0	NOK	471763
AB1656E0	NOK	30X40X7!
AB1666E0	NOK	1970
AB1673E0	NOK	223012
AB1679G0	NOK	223014*
AB1682E0	NOK	223014*
AB1704F0	NOK	30X50X7
AB1705F0	NOK	30X50X7
AB1706E0	NOK	30X50X7
AB1709G0	NOK	30X50X7
AB1724E0	NOK	223035
AB1736E0	NOK	30X55X10
AB1770F0	NOK	472475
AB1776F0	NOK	470328!
AB1776F0	NOK	481213*
AB1779E0	NOK	471765!
AB178	JOHND	411253!
AB1783E0	NOK	471354!
AB1815E	NOK	343186
AB1826E0	NOK	471413!
AB1830E	NOK	471413!

! Industrial Size/Type * Minor Width Difference

= The U.S. customer service number is 877-4-TIMKEN. The Canadian customer service numbers are 800-565-4927 (English) and 800-565-0438 (French-Canadian).

Mfr. No.	Name	Zero Duplication or Recommended Industrial
AB1832F0	NOK	**471737**
AB1832F1	NOK	**471737**
AB1838E0	NOK	**471766**!
AB1850E	NOK	**471801**!
AB1850E1	NOK	**471801**!
AB1880E0	NOK	223230
AB1884E0	NOK	223235
AB1884E0	NOK	32X46X6!
AB1894E0	NOK	223240
AB1894E0	NOK	32X48X8!
AB1902E0	NOK	223255
AB1902E0	NOK	32X52X7!
AB1904E0	NOK	1167
AB1978E0	NOK	34X54X9
AB1990E	NOK	**482163**!
AB1990E0	NOK	**482163**!
AB2005E0	NOK	**472258**!
AB2012F0	NOK	**471192**
AB2041F0	NOK	223510
AB2041F0	NOK	35X47X7!
AB2056E	NOK	35X50X8!
AB2056E0	NOK	223520!
AB2057G0	NOK	223520!
AB2066E0	NOK	223535
AB2069E0	NOK	223535
AB2081E	NOK	35X55X8!
AB2081E0	NOK	35X55X11!
AB2085F0	NOK	223542
AB2162E0	NOK	223605
AB2164E0	NOK	223605
AB2230E0	NOK	223832
AB2231E0	NOK	223832
AB2239E0	NOK	223840
AB2240G0	NOK	1175
AB2240G0	NOK	38X58X8!
AB2250E0	NOK	223845
AB2253720	IH	**471466**!
AB2267E0	NOK	**474276**!
AB2278F	NOK	**473227**
AB2281G0	NOK	**470625**!
AB2281G0	NOK	**470625***
AB2298E	NOK	**474281***
AB2298E	NOK	**474281**!
AB2298E0	NOK	**474281**!
AB2298E0	NOK	**474281***
AB2343E0	NOK	224010
AB2343E0	NOK	40X52X7!
AB2361G	NOK	224020
AB2361G	NOK	40X55X8!
AB2361G0	NOK	224020
AB2369F0	NOK	40X58X10!
AB2375E0	NOK	224040
AB2375E0	NOK	40X60X10!
AB2379F0	NOK	224020
AB2386E	NOK	224045
AB2386E	NOK	40X62X8!
AB2386E0	NOK	224045
AB2386E0	NOK	40X62X12!
AB2386E0	NOK	40X62X7
AB2388F0	NOK	224045
AB2390H0	NOK	224045
AB2405E0	NOK	40X65X10
AB2443Y0	NOK	1181
AB2443Y0	NOK	41X56X7!
AB2459E0	NOK	**473231**!
AB2469E0	NOK	474216
AB2481Y	NOK	1180
AB2481Y	NOK	42X55X8!
AB2481Y0	NOK	1180
AB2481Y0	NOK	41X55X7!
AB2483E0	NOK	224210
AB2493E0	NOK	1953
AB2493E0	NOK	42X60X7!
AB2504E0	NOK	224255
AB2507E0	NOK	224255
AB25252027	IH	**472299**
AB2525203	IH	**412871**!
AB2525304	IH	410059
AB2525304	IH	**470380**!
AB2569E0	NOK	474216
AB2578	JOHND	**476838**!
AB2594E0	NOK	**470334**!
AB2600E0	NOK	**471141**!
AB2614E0	NOK	224520
AB2614E0	NOK	45X60X10!
AB2641E0	NOK	45X60X7
AB2643F0	NOK	224520
AB2643F0	NOK	45X60X10!
AB2651F0	NOK	1012N
AB2652E0	NOK	1012
AB2652E0	NOK	1012N
AB2666F0	NOK	224560
AB2668F0	NOK	224560
AB2753E0	NOK	**472439**
AB2773YO	NOK	224820
AB2773YO	NOK	48X62X8!
AB2775E0	NOK	224830
AB2775G	NOK	224820
AB2775G0	NOK	48X62X8!
AB2788E0	NOK	1994
AB2791E0	NOK	1994
AB2838E0	NOK	225010
AB2838E0	NOK	50X65X8!
AB2847GO	NOK	225020
AB2853	NOK	50X70X9
AB2853E	NOK	1960
AB2853E0	NOK	1960
AB2853E0	NOK	50X70X8!
AB2854G0	NOK	1189
AB2861E0	NOK	225030
AB2861E0	NOK	50X72X8!
AB2864G0	NOK	225030
AB2888E0	NOK	225050
AB2913E0	NOK	**471424**!
AB2919E0	NOK	**472492**!
AB2922F0	NOK	**472492***
AB2922F0	NOK	**472492**!
AB2931E0	NOK	**472397**!
AB2934F0	NOK	**472397**!
AB2955	NOK	1955
AB2955	NOK	52X65X9!
AB2955I	NOK	225208
AB2967E0	NOK	52X75X12
AB2994E0	NOK	**470898**
AB3014E1	NOK	225420
AB3036F0	NOK	55X70X8!
AB3040G0	NOK	225530
AB3040G0	NOK	55X72X8!
AB3053E0	NOK	55X78X10
AB3055J0	NOK	55X78X10
AB3062E0	NOK	225550
AB3062E0	NOK	55X80X8!
AB3072F0	NOK	55X85X10
AB3092E0	NOK	56X72X11.5
AB3094E0	NOK	56X78X8
AB3135E0	NOK	**412920**!
AB3148E0	NOK	225875
AB3152G0	NOK	225880
AB3154E0	NOK	225880
AB3165E	NOK	**410694**!
AB3193F0	NOK	60X75X8!
AB3195F0	NOK	60X75X8!
AB3204F0	NOK	60X78X8
AB3220E0	NOK	2001
AB3222G0	NOK	2001
AB3224E0	NOK	60X85X8!
AB3234E	NOK	60X85X8
AB3234E0	NOK	60X85X12
AB3244E	NOK	60X90X8
AB3244E0	NOK	60X90X10
AB3253E	NOK	**470565**!
AB3253E0	NOK	**470565**!
AB3267E0	NOK	**410825**
AB3290F0	NOK	62X80X10
AB3297E0	NOK	226285
AB3336E0	NOK	**471271**!
AB3338E0	NOK	**471271**!
AB3347F0	NOK	**415449**!
AB3352E	NOK	**415001**!
AB3389G0	NOK	65X82X8
AB3395E0	NOK	226520
AB3409F0	NOK	226530
AB3446E0	NOK	**417082**
AB3459F0	NOK	226850
AB3478F0	NOK	**416664**!
AB3487E0	NOK	**416282**
AB3513E0	NOK	227040
AB3513E0	NOK	70X90X10!
AB3519G0	NOK	227045
AB3527G0	NOK	70X95X13
AB3532G0	NOK	227060
AB3537F0	NOK	**416921**!
AB3562G0	NOK	227240
AB3573E	NOK	**416921**!
AB3618A4	NOK	75X100X12!
AB3618H0	NOK	227550
AB3631E0	NOK	75X105X13
AB3664E0	NOK	**415995**!
AB3664E0	NOK	**415995***
AB3665E0	NOK	**415995**!
AB3665E0	NOK	**415995***
AB3705E0	NOK	**417621**!
AB3705E0	NOK	**417621***
AB3708E0	NOK	**416288**!
AB3732E	NOK	228010
AB3732E	NOK	80X100X10!
AB3732E0	NOK	80X100X10!
AB3744H0	NOK	228020
AB3744P	NOK	80X105X14!
AB3777X	NOK	**455336**
AB3777X1	NOK	**455336**
AB3796E0	NOK	**476470**!
AB3796E0	NOK	**476470***
AB3809E0	NOK	**418028**!
AB3809E0	NOK	**418028***
AB3837E0	NOK	85X105X13
AB3842H0	NOK	228520
AB3855E0	NOK	85X120X12!
AB3891F0	NOK	**415991**!
AB3891F0	NOK	455146
AB3944E0	NOK	90X125X12
AB3963E0	NOK	**415937**!
AB3994F0	NOK	229510
AB4007E0	NOK	229520
AB4017F0	NOK	**415379**
AB4020E0	NOK	**416339**
AB4037E0	NOK	**416345**!
AB4055E0	NOK	100X120X12!
AB4055E0	NOK	231002
AB4063A0	NOK	231003
AB4109E0	NOK	**415035***
AB4109E0	NOK	**415035**!
AB4116F0	NOK	**417356**!
AB4150E0	NOK	231053
AB4161E0	NOK	231058
AB4180E0	NOK	**415196**!
AB4184E	NOK	**415045**!
AB4184E2	NOK	**415045**!
AB4212E0	NOK	100X140X13*
AB4212E0	NOK	110X140X12
AB4212E0	NOK	231108
AB4228E	NOK	**416380**!
AB4228E0	NOK	**416380**!
AB4255F0	NOK	**416888**!
AB4262E0	NOK	**416892**!
AB4269E	NOK	**415351**!
AB4269E2	NOK	**415351**!
AB4346A0	NOK	231206
AB4346E0	NOK	120X150X12
AB4362E0	NOK	**415138**!
AB4399A0	NOK	125X155X15
AB4404E0	NOK	231255
AB4413E	NOK	**417273**
AB4413E3	NOK	**417273**
AB4451A0	NOK	130X160X12
AB4451A0	NOK	231302
AB4465E0	NOK	231305
AB4471X	NOK	**416557**
AB4471X0	NOK	**416557**
AB4542A0	NOK	231404
AB4581A0	NOK	145X175X15
AB4624A0	NOK	231502
AB4649E	NOK	**415072**
AB4649E0	NOK	**415072**
AB4713A0	NOK	160X190X15
AB4764E	NOK	**416229**
AB4764E0	NOK	**416229**
AB4795A0	NOK	231705
AB4835E	NOK	**455584**
AB4835E0	NOK	**455584**
AB4898A0	NOK	231805
AB4974F0	NOK	231905
AB5035E	NOK	**415551**
AB5035E0	NOK	**415551**
AB5054G0	NOK	200X230X15!
AB5070R	JOHND	**410496**!
AB5131E0	NOK	210X240X15
AB5160R	JOHND	**417158**!
AB5204E0	NOK	232205
AB5340E	NOK	240X270X16!
AB5340EX	NOK	240X270X15!
AB5351A0	NOK	240X280X16
AB5398E0	NOK	250X280X15
AB5560E0	NOK	280X320X20
AB5841A6	NOK	360X400X20
AB6764E	NOK	8704S
AB6819E0	NOK	340853
AB6922E0	NOK	**471733**
AB6922F0	NOK	**471733**
AB6935E	NOK	1010=
AB6957E	NOK	**480889***
AB7017E0	NOK	**472705**!*
AB7079E0	NOK	**416273**
AB7080E0	NOK	**473228**!
AB7095E0	NOK	**472164**!
AB7101E0	NOK	38X47X8!
AB7109E0	NOK	**471341**!
AB7126E0	NOK	**473197**=
AB7127E0	NOK	**471795**
AB7128E0	NOK	**471750**!
AB7138E0	NOK	**471255**!
AB7153E0	NOK	**471272**!
AB7166E0	NOK	**471570**!
AB7175E0	NOK	**471192**
AB718	JOHND	**411253**!
AB7270E0	NOK	**481181**!
AB7282E0	NOK	**416135**!
AB7345E	NOK	**472397**!

! Industrial Size/Type * Minor Width Difference

= The U.S. customer service number is 877-4-TIMKEN. The Canadian customer service numbers are 800-565-4927 (English) and 800-565-0438 (French-Canadian).

Mfr. No.	Name	Zero Duplication or Recommended Industrial
AB7358E1	NOK	471539!*
AB7368E0	NOK	481163!
AB7375E0	NOK	472560N!
AB7391E0	NOK	6863S!
AB7408E0	NOK	415960
AB7409E0	NOK	473459!
AB7410E0	NOK	471138!
AB7446E0	NOK	38X47X8!
AB7621E0	NOK	473237
AB7625E0	NOK	471818
AB764E0	NOK	450536
AB764E0	NOK	471535!
AB7650E0	NOK	471645
AB7659E0	NOK	471649!
AB7673E1	NOK	470380!
AB7674E0	NOK	473233!
AB7684E0	NOK	471870!
AB7686E0	NOK	470334!
AB7738E0	NOK	413246!
AB7758E0	NOK	471442!
AB7759E0	NOK	471472!
AB7760E0	NOK	471564
AB7761E0	NOK	471567!
AB7762E0	NOK	471643!
AB7762E1	NOK	471643!
AB7763E0	NOK	471570!
AB7764E0	NOK	470590
AB7765E0	NOK	471689!
AB7766E0	NOK	471692!
AB7767E0	NOK	470712!
AB7768E0	NOK	473203
AB7769E0	NOK	472475
AB7770E0	NOK	473205!
AB7771E	NOK	473210
AB7772E	NOK	473211
AB7773E	NOK	473212
AB7774E	NOK	473213
AB7775E0	NOK	473214!
AB7776E0	NOK	473215!
AB7777E0	NOK	473224!
AB7778E0	NOK	473016!
AB7779E0	NOK	473225!
AB7780E0	NOK	473226
AB7781E0	NOK	473227!
AB7782E0	NOK	470380!
AB7783E0	NOK	473228!
AB7784E0	NOK	472213
AB7785E0	NOK	472299
AB7786E0	NOK	473229!
AB7787E0	NOK	470682
AB7788E0	NOK	473230!
AB7789E0	NOK	473010!
AB7790E0	NOK	473232!
AB7791E	NOK	473233
AB7792E0	NOK	473234!
AB7793E0	NOK	473235!
AB7794E	NOK	473236!
AB7795E0	NOK	473237!
AB7796E0	NOK	472185!
AB7797E0	NOK	472179
AB7798E0	NOK	472439
AB7799E0	NOK	472572!
AB7800E0	NOK	473238!
AB7801E0	NOK	473239!
AB7802E	NOK	473240
AB7803E0	NOK	472319
AB7804E0	NOK	473241
AB7805E0	NOK	472144!
AB7806E0	NOK	472394
AB7807E	NOK	6936S
AB7807E0	NOK	6936S
AB7808E	NOK	473242
AB7809E0	NOK	473204
AB7810E0	NOK	472015!
AB7811E0	NOK	472016!
AB7812E0	NOK	473243
AB7813E	NOK	473244
AB7814E0	NOK	472018
AB7815E	NOK	482020=
AB7816E	NOK	473245
AB7817E0	NOK	472636!
AB7818E0	NOK	413246!
AB7819E0	NOK	413247!
AB7820E0	NOK	416271!
AB7821E0	NOK	470605!
AB7822E0	NOK	413248
AB7823E	NATSU	415483
AB7823E	NATSU	415483=
AB7823E0	NOK	415483
AB7825E0	NOK	417343!
AB7826E0	NOK	415984!
AB7827E0	NOK	417316!
AB7828E0	NOK	415303!
AB7829E0	NOK	417344!
AB7830E0	NOK	417158!
AB7831E0	NOK	417349!
AB7832E0	NOK	417350!
AB7833E0	NOK	417351!
AB7834E0	NOK	417171!
AB7835E0	NOK	417172
AB7836E0	NOK	417181!
AB7837E0	NOK	417353!
AB7838E0	NOK	416294!
AB7840E0	NOK	417191
AB7841E0	NOK	417354!
AB7842E0	NOK	416624!
AB7843E0	NOK	417196!
AB7844E0	NOK	415437
AB7845E	NATSU	416130!
AB7845E	NATSU	486130=
AB7845E0	NOK	416332*
AB7845E0	NOK	416332!
AB7846E0	NOK	417355!
AB7847E0	NOK	416125!
AB7848E0	NOK	416041
AB7849E0	NOK	417205!
AB7850E0	NOK	417211!
AB7851E0	NOK	415697!
AB7852E0	NOK	417366!
AB7853E	NATSU	417357
AB7855E	NATSU	472157
AB7855E	NATSU	486556=
AB7855E0	NOK	416556!
AB7855E0	NOK	472157*
AB7856E	NATSU	416891!
AB7856E0	NOK	416891!
AB7857E	NATSU	416153!
AB7857E0	NOK	416153!
AB7858E	NATSU	417247!
AB7858E0	NOK	417247!
AB7859E	NATSU	415725!
AB7859E0	NOK	415725!
AB7860E	NATSU	470625!
AB7860E0	NOK	470625!
AB7892E0	NOK	471270
AB7897E0	NOK	450375!
AB7897E0	NOK	6936S!
AB7897E0	NOK	9845
AB7934E0	NOK	6370N
AB7938E0	NOK	473447
AB7940E0	NOK	470530!
AB8036E0	NOK	471354!
AB8036F0	NOK	471354=
AB8065E0	NOK	471442!
AB8066E0	NOK	472475
AB8071E0	NOK	471651
AB8201E0	NOK	471103!
AB8201E1	NOK	471103!
AB8202E	NOK	472354!
AB8202E0	NOK	472354!
AB8353E0	NOK	471984
AB8375E0	NOK	410190
AB8402E0	NOK	352541
AB8439E0	NOK	6413S
AB8476E0	NOK	471344
AB8497E0	NOK	330699!
AB8523E0	NOK	473258!
AB8523E1	NOK	473258!
AB8526E0	NOK	482126
AB8535E0	NOK	410190*
AB8759E0	NOK	472164!
AB8771E0	NOK	8133S
AB8778E0	NOK	471551!
AB8779E0	NOK	481443!
AB8931E0	NOK	5124
AB8932E0	NOK	9569S
AB8935E0	NOK	471688
ABB013B0	NOK	52X65X9!
ABB587A0	NOK	17X28X7
ABX69660	JOHND	240215
AC0105E0	NOK	350364
AC0105E1	NOK	350364
AC0105H0	NOK	350364
AC0123E1	NOK	10X25X7
AC0134F0	NOK	220860
AC0134F0	NOK	8X16X7!
AC0205A0	NOK	9X22X7
AC0205E0	NOK	9X22X7
AC0224F0	NOK	330385!
AC0224F1	NOK	330385!
AC0227E0	NOK	350156
AC0227E0	NOK	473096!
AC0227E1	NOK	350156
AC0227E1	NOK	473096!
AC0308E0	NOK	11X22X7
AC0387E0	NOK	12X28X7
AC0442F1	NOK	330699!
AC0456E0	NOK	471526!
AC0514E0	NOK	221410
AC0526A0	NOK	14X30X7
AC0545E0	NOK	471281!
AC0559E0	NOK	472705!
AC0598A0	NOK	221540
AC0603E0	NOK	15X32X8
AC0610F0	NOK	15X35X7
AC0611E0	NOK	15X35X7
AC0620E0	NOK	471532
AC0639E	NOK	351487
AC0639E0	NOK	351487
AC0644E	NOK	471466!
AC0649E0	NOK	471466!
AC0654E0	NOK	471264!
AC0678E0	NOK	16X26X7
AC0684E1	NOK	16X28X7
AC0684E1	NOK	221610
AC0687E0	NOK	221620
AC0721E0	NOK	481481
AC0736E0	NOK	221710
AC0742E0	NOK	221720
AC0745E0	NOK	221720
AC0750E1	NOK	221730
AC0758E0	NOK	17X35X7
AC0759H0	NOK	17X35X7
AC0760A0	NOK	17X35X7
AC0771F0	NOK	17X40X7
AC0829A0	NOK	18X35X7
AC0875A0	NOK	19X35X10!
AC0897E0	NOK	254270!
AC0898E0	NOK	1049
AC0913E0	NOK	470954!
AC0913E1	NOK	470954!
AC0913O0	NOK	470954
AC0923F0	NOK	471554!
AC0984E0	NOK	20X30X7
AC0997E0	NOK	222020
AC1012E0	NOK	222030
AC1013A0	NOK	222030
AC1015	FMC	415088
AC1015	FMC	415088!
AC10171	COC	473436
AC10177	OLIVE	473436
AC1029E0	NOK	222050
AC1030F0	NOK	20X40X10
AC1030FO	NOK	20X40X7!
AC1032F0	NOK	20X40X10
AC1033A0	NOK	20X40X10
AC1038E	NOK	20X42X10
AC1038E0	NOK	20X42X10
AC1048F0	NOK	20X47X7
AC1048F0	NOK	222075
AC1059E0	NOK	20X52X7
AC1070E0	NOK	471539
AC10801	OLIVE	472409
AC11259	DRESS	471820
AC11259	EL-MO	471820
AC11259	WAYNE	471820
AC1126F0	NOK	222220
AC11436	COC	455356
AC11436	OLIVE	455356
AC11436	WHITE	455356
AC1148A0	NOK	22X42X10
AC1148E	NOK	22X42X10
AC1148E0	NOK	22X42X10
AC11498	WAYNE	473214!
AC11501	WAYNE	450165
AC11501	WAYNE	471801!
AC1172E	NOK	5076
AC1172E0	NOK	5076
AC11805	COC	412871!
AC11805	OLIVE	412871!
AC1181E0	NOK	471267!
AC1260A0	NOK	222430
AC1260A0	NOK	24X40X7!
AC1314A0	NOK	222540
AC1314A0	NOK	25X40X7!
AC1350E0	NOK	222560
AC1363E0	NOK	25X50X10
AC1372F	NOK	25X52X8
AC1372F0	NOK	25X52X10
AC1372F0	NOK	25X52X7!
AC1419E0	NOK	471224!
AC1474A0	NOK	26X42X10
AC1476E0	NOK	26X45X8
AC1543E0	NOK	28X42X8!
AC1583	KOHL	471354!
AC1598E0	NOK	3638*
AC1598E0	NOK	471652
AC1599E0	NOK	471652
AC1665E	NOK	30X42X7!
AC1665E0	NOK	1970
AC1666E2	NOK	1970
AC1679A0	NOK	1981
AC1682E0	NOK	223014*
AC1691	OLIVE	471692!
AC1709A0	NOK	30X50X7
AC1719E0	NOK	30X52X7
AC1748G0	NOK	30X62X7
AC1765F0	NOK	30X72X10

! Industrial Size/Type * Minor Width Difference

= The U.S. customer service number is 877-4-TIMKEN. The Canadian customer service numbers are 800-565-4927 (English) and 800-565-0438 (French-Canadian).

Mfr. No.	Name	Zero Duplication or Recommended Industrial
AC1824E0	NOK	7412S
AC1838E0	NOK	**471766**!
AC1841E0	NOK	**471766**!
AC1853	KOHL	**471354**!
AC1880E0	NOK	223230
AC1902E0	NOK	223255
AC1904A0	NOK	1167
AC2005E0	NOK	**472258**
AC2007E0	NOK	6760S
AC2016F0	NOK	**473214**!
AC2016F0	NOK	**473214***
AC2056E0	NOK	223520!
AC2057A	NOK	35X50X8!
AC2057A0	NOK	223520!
AC2057F0	NOK	223520!
AC2065E0	NOK	35X52X8!
AC2069E0	NOK	223535
AC2083J	NOK	223540
AC2084E	NOK	223542
AC2084E	NOK	35X55X8!
AC2084E0	NOK	35X55X11!
AC2085A0	NOK	223542
AC2162E0	NOK	223605
AC2205E	NOK	4989
AC2205E	NOK	710209
AC2205F	NOK	4989
AC2205F	NOK	710209
AC2206E0	NOK	4989
AC2218E0	NOK	223800
AC2222E	NOK	38X52X8.5!
AC2222E0	NOK	38X52X7!
AC2230E0	NOK	223832
AC2240A0	NOK	1175
AC225374	IH	**473010**!
AC2253743	IH	450165
AC2253743	IH	**471801**!
AC2269E0	NOK	**481163**!
AC2272E0	NOK	**480630**!
AC2296E0	NOK	**473440**!
AC2304G0	NOK	226018
AC2310E	NOK	1128
AC2310E0	NOK	1128
AC2318E0	NOK	**473517**!
AC2322E0	NOK	**473441**
AC2343E	NOK	1217
AC2343E0	NOK	224010
AC2343E0	NOK	40X52X7!
AC2361E	NOK	224020
AC2361E	NOK	40X55X8!
AC2361E0	NOK	224020
AC2369A0	NOK	40X58X10!
AC2375E0	NOK	224040
AC2379E0	NOK	224040
AC2379E0	NOK	40X60X10!
AC2388A0	NOK	224045
AC2390E0	NOK	224045
AC2493E0	NOK	1953
AC2576F0	NOK	6703S
AC2643E0	NOK	224520
AC2651F0	NOK	45X62X8!
AC2668A0	NOK	224560
AC2774F0	NOK	224830
AC2774F0	NOK	48X62X8!
AC2775F	NOK	224820
AC2775F0	NOK	48X62X8!
AC2780E0	NOK	1973
AC2780E0	NOK	48X65X10!
AC2791A0	NOK	1994
AC2847E0	NOK	225020
AC2854E0	NOK	1189
AC2861E0	NOK	225030
AC2861E0	NOK	50X72X8!
AC2864K0	NOK	225030
AC2888E0	NOK	225050
AC2908E0	NOK	**352541**
AC2964K0	NOK	225030
AC2967A0	NOK	52X75X12
AC2980E0	NOK	**451948**
AC2980E0	NOK	472579!
AC3040A0	NOK	225530
AC3040A0	NOK	55X72X8!
AC3055A0	NOK	55X78X10
AC3072E0	NOK	225560
AC3072E0	NOK	55X85X10
AC3139E0	NOK	**471272**!
AC3147E	NOK	710136
AC3154A0	NOK	225880
AC3204G	NOK	226018
AC3204G0	NOK	60X78X8
AC3222A0	NOK	2001
AC3222E8	NOK	60X82X12!
AC3244E0	NOK	60X90X10
AC3260E1	NOK	**413247**!
AC3280E0	NOK	**411500**
AC3297A0	NOK	226285
AC3311A	OLIVE	**476838**!
AC3409A0	NOK	226530
AC3459A0	NOK	226850
AC3505E0	NOK	227020
AC3505E0	NOK	70X88X12
AC3519A	NOK	70X92X12
AC3519A0	NOK	227045
AC3527A0	NOK	70X95X13
AC3618E0	NOK	227550
AC3732E	NOK	228010
AC3732E	NOK	80X100X10!
AC3732E1	NOK	80X100X10!
AC3744A	NOK	80X105X14!
AC3744A0	NOK	228020
AC3744A0	NOK	80X105X13!
AC3842G0	NOK	228520
AC3844A	NOK	228020
AC3844A	NOK	80X105X13!
AC3888E	NOK	**416624**!
AC3888E0	NOK	**416624**!
AC3932A0	NOK	90X115X12
AC396	LK-BT	**415072**
AC3994E0	NOK	229510
AC4007E0	NOK	229520
AC4063G2	NOK	231003
AC4212E0	NOK	231108
AC4282F0	NOK	115X145X14
AC4282I0	NOK	115X145X15
AC4346F0	NOK	120X150X12
AC4346F0	NOK	231206
AC4451F2	NOK	130X160X12
AC4451F2	NOK	231302
AC4484E	NOK	**417262**!
AC4484E0	NOK	**417262**!
AC4542E0	NOK	231404
AC4568E	NOK	**417555**!
AC4568E0	NOK	**417555**!
AC4581E0	NOK	145X175X15
AC4624E1	NOK	231502
AC4672E0	NOK	155X190X15
AC4713E0	NOK	160X190X15
AC484	LK-BT	**415066**
AC4898E0	NOK	180X210X15
AC4975E0	NOK	231905
AC5204E1	NOK	232205
AC6763E0	NOK	**471192**
AC6897E0	NOK	17X29X7
AC6900E0	NOK	**471442**!
AC7071E0	NOK	**3395**
AC7071E0	NOK	352444!
AC7126E	NOK	353135
AC7126E	NOK	**474278**!
AC7126E0	NOK	353135
AC7126E0	NOK	**474278**!
AC7174E	NOK	**471689**!
AC7175E	NOK	**471192**
AC7176E	NOK	**473234**!
AC7269E0	NOK	**471750**
AC7640E0	NOK	**330385**!
AC7669E0	NOK	**471570**!
AC7695E0	NOK	**471276***
AC7696E0	NOK	**470596**
AC7717E0	NOK	35X80X8
AC7758E0	NOK	**471442**!
AC7868E0	NOK	8X22X7!
AC7873E0	NOK	**481481**
AC8004E0	NOK	351487
AC81	FMC	**415645**!
AC81	FMC	455104
AC81	LK-BT	**415645**!
AC81	LK-BT	455104
AC8202E0	NOK	**472354**!
AC8221E0	NOK	**353120**
AC8226E0	NOK	**473224**!
AC8368E	NOK	710076
AC8368E0	NOK	710076
AC8419F	NOK	223240
AC8419F	NOK	32X48X8!
AC8419F0	NOK	223240
AC8419F0	NOK	32X48X8!
AC8471E0	NOK	**480210**!
AC8474E0	NOK	**472354**!
AC8474F0	NOK	**472354**!
AC8491F0	NOK	32X48X8!
AC8570W	NOK	1214
AC8570W	NOK	1214N
AC8570W0	NOK	1214
AC8570W0	NOK	1214N
AC8570W0	NOK	43X55X8!
AC9191	COC	**450621**
AC9191	OLIVE	**450621**
AC9191	WHITE	**450621**
AC9338	OLIVE	5976S
AC9546	COC	**472185**!
AC9546	OLIVE	**472185**!
ACA4000	LEYLD	**471192**
ACC060A0	NOK	20X35X7!
ACC178A0	NOK	45X62X8!
ACC370A0	NOK	20X52X7
ACC394A1	NOK	35X47X7!
ACC434B0	NOK	223550
ACC464A0	NOK	15X35X7
ACC479A0	NOK	70X90X10!
ACC522A0	NOK	25X42X10
ACC522A0	NOK	25X42X8!
ACC542A0	NOK	17X30X7
ACC628A1	NOK	12X26X7
ACC635A0	NOK	28X40X7!
ACC639A0	NOK	35X52X8!
ACC640A0	NOK	17X40X7
ACC646A0	NOK	30X47X7!
ACC656A0	NOK	60X80X8!
ACC752A0	NOK	85X130X13
ACC7538	FRUEH	H075
ACC956A0	NOK	25X62X10
ACF4004	LEYLD	1035=
AD0227E0	NOK	350156
AD0227E0	NOK	**473096**!
AD0325E	NOK	**472810**!
AD0325F0	NOK	**472810**!
AD0371E0	NOK	12X22X7!
AD0451E0	NOK	**471442**!
AD0456E0	NOK	**471526**!
AD0554E	NOK	**471551**!
AD0598G0	NOK	221540
AD0638G0	NOK	7188S
AD0639E	NOK	351487
AD0645G0	NOK	**471466**!
AD0646E0	NOK	**471466**!
AD0654E0	NOK	**471264**!
AD0657E0	NOK	**471255**!
AD0660F0	NOK	**471612**
AD0678E	NOK	16X26X7
AD0678F0	NOK	16X26X7
AD0685F0	NOK	221610
AD0687H0	NOK	221620
AD0722F	NOK	**481481***
AD0723F0	NOK	17X35X7
AD0745E1	NOK	221720
AD0750F	NOK	221730
AD0750F0	NOK	17X32X7!
AD0751F	NOK	221730
AD0751F0	NOK	221730
AD0759E0	NOK	17X35X7
AD0783F0	NOK	**471529**
AD0897E0	NOK	**254270**!
AD0900E0	NOK	**254270**!
AD0913F0	NOK	**470954**!
AD0913F1	NOK	**470954**!
AD0923F0	NOK	**471554**!
AD0953F0	NOK	**481443**!
AD0997H1	NOK	20X32X7!
AD1012F2	NOK	222030
AD1013E0	NOK	222030
AD1015F0	NOK	222030
AD1032F0	NOK	20X40X10
AD1033F0	NOK	20X40X10
AD1127E0	NOK	222220
AD1127G0	NOK	22X35X7
AD1147F0	NOK	22X42X10
AD1172E0	NOK	7840S
AD1181H0	NOK	**471267**!
AD1181I0	NOK	**471267**!
AD1181J0	NOK	**471267**!
AD1190F0	NOK	**471570**!
AD1190F0	NOK	**471570***
AD1194E0	NOK	**471646**!
AD1198F0	NOK	**471730**
AD1250R	JOHND	**415995**!
AD1251R	JOHND	**416654**!
AD1260R	JOHND	**416339**
AD1260R	JOHND	455031!
AD1268	JOHND	**416339**
AD1268	JOHND	455031!
AD1306H1	NOK	222535
AD1307E0	NOK	222535
AD1314F0	NOK	222541
AD1337F0	NOK	25X45X8
AD1351E1	NOK	222560
AD1358E0	NOK	222820
AD1377	JOHND	**450593**!
AD1403E0	NOK	**252277**
AD1407E0	NOK	**472311**!
AD1410F1	NOK	**471224**!
AD1410G0	NOK	**471224**!
AD1410H0	NOK	**471224**!
AD1412F0	NOK	**471224**!
AD1412F0	NOK	**471224***
AD1430E	NOK	**471649**!
AD1430F	NOK	**471649**!
AD1430F1	NOK	**471649**!
AD1431F	NOK	**471649**!
AD1446E0	NOK	**471760**

! Industrial Size/Type * Minor Width Difference

= The U.S. customer service number is 877-4-TIMKEN. The Canadian customer service numbers are 800-565-4927 (English) and 800-565-0438 (French-Canadian).

Mfr. No.	Name	Zero Duplication or Recommended Industrial
AD1469E0	NOK	26X40X7!
AD1598E0	NOK	**471652**
AD1598F0	NOK	**471652**=
AD1598F1	NOK	**471652**
AD1598F2	NOK	**471652**
AD1617E0	NOK	**471763**
AD1617F0	NOK	**471763**
AD1623E	NOK	1989
AD1623E0	NOK	1989
AD1636E	NOK	**474260**!
AD1666E0	NOK	1970
AD1671G0	NOK	223012
AD1671G0	NOK	30X44X7!
AD1679G0	NOK	223014
AD1699E0	NOK	30X48X8
AD1705E0	NOK	30X50X7
AD1709E0	NOK	30X50X7
AD1779E0	NOK	**471765**!
AD1820E0	NOK	322353
AD1820E0	NOK	**474278**!
AD1826F0	NOK	**471413**!
AD1828E0	NOK	**471413**!
AD1832E0	NOK	**471737**
AD1836E0	NOK	470706=
AD1838E0	NOK	**471766**!
AD1841F0	NOK	**471766**!
AD1841F0	NOK	**471766***
AD1894E0	NOK	223240
AD1904F0	NOK	1167
AD1929F0	NOK	710070
AD2002E	NOK	1097N
AD2002E0	NOK	1097N
AD2005G	NOK	**472258**!
AD2005G0	NOK	**472258**
AD2005G1	NOK	**472258**!
AD2005G2	NOK	**472258**!
AD2007F	NOK	**470774**!
AD2007F0	NOK	**470774**!
AD2066E0	NOK	223535
AD2066E0	NOK	35X52X8!
AD2077E0	NOK	35X54X8!
AD2081G	NOK	35X55X8!
AD2081G0	NOK	35X55X11!
AD2085G0	NOK	223542
AD2085N	NOK	35X55X8!
AD2085N0	NOK	35X55X11!
AD2107E0	NOK	35X60X10!
AD2107E0	NOK	710201
AD2132F	NOK	**473258**
AD2132F0	NOK	35X62X10
AD2230I0	NOK	223832
AD2230W0	NOK	38X55X7!
AD2240I0	NOK	1175
AD2240K0	NOK	38X58X8!
AD2261G	NOK	1177
AD2261G0	NOK	1177
AD2261H	NOK	1177
AD2267E0	NOK	**474276**!
AD2322E0	NOK	**473441**
AD2323E0	NOK	**473442**!
AD2343E0	NOK	224015
AD2353Y	NOK	**1213N**
AD2353Y0	NOK	**1213N**
AD2353Y0	NOK	40X54X6!
AD2359G	NOK	224020
AD2359G	NOK	40X55X8!
AD2359G0	NOK	224020
AD2369F0	NOK	40X58X10!
AD2375F	NOK	710147
AD2375F0	NOK	40X60X10!
AD2375F0	NOK	710147
AD2388E0	NOK	224045
AD2390I0	NOK	224045
AD2398E	NOK	1216
AD2398E	NOK	1216N
AD2398G0	NOK	1216
AD2398G0	NOK	1216N
AD2402E	NOK	474161
AD2402E0	NOK	40X65X10
AD2403I0	NOK	40X65X10
AD2405E0	NOK	40X65X10
AD2459E	NOK	1192
AD2459E0	NOK	1192
AD2480E	NOK	42X55X8!
AD2480E0	NOK	42X55X8!
AD2482E	NOK	224200
AD2493E0	NOK	42X60X7!
AD2507H0	NOK	42X65X10!
AD2507I0	NOK	224255
AD2527E0	NOK	**473317**
AD2528E0	NOK	**470460**
AD2565E	NOK	710283
AD2599F0	NOK	**472179**
AD2604E0	NOK	**471984**
AD2643G0	NOK	224520
AD2651G0	NOK	1185
AD2655F	NOK	1992
AD2655F0	NOK	1992
AD2655F0	NOK	45X65X8!
AD2666F0	NOK	45X68X7!
AD2668G0	NOK	224560
AD2685E0	NOK	224570
AD2752E0	NOK	**472439**
AD2763Y	NOK	1959
AD2763Y0	NOK	1959
AD2780G0	NOK	224820
AD2791E0	NOK	1994
AD2791J0	NOK	712010
AD2838F0	NOK	225010
AD2838F1	NOK	225010
AD2847F0	NOK	50X68X8!
AD2862E0	NOK	225035
AD2864G0	NOK	225035
AD2867F0	NOK	225035
AD2888F0	NOK	50X80X8
AD2913E0	NOK	**471424**!
AD2913F	NOK	**471424**!
AD2919E	NOK	**472492**!
AD2919F0	NOK	**472492**!
AD2919G0	NOK	**472492**=
AD2920F0	NOK	**472492**!
AD2920F1	NOK	**472492**!
AD2931F0	NOK	**472397**!
AD2942E0	NOK	**410102**
AD2955Y	NOK	1955
AD2955Y	NOK	52X65X9!
AD2955Y0	NOK	1955
AD2955Y0	NOK	52X65X9!
AD2967E0	NOK	52X75X12
AD2994E0	NOK	**470898**
AD3000E0	NOK	**472015**!
AD3005F0	NOK	**472409**!
AD3005F1	NOK	**472409**!
AD3040F0	NOK	225530
AD3055H0	NOK	55X78X10
AD3135E	NATSU	**412920**!
AD3135E0	NOK	**412920**!
AD3135E1	NOK	**412920**!
AD3148E0	NOK	225875
AD3154F0	NOK	225880
AD3154F0	NOK	58X80X8
AD3167E0	NOK	**472150**=
AD3193F0	NOK	60X75X8!
AD3204E0	NOK	60X78X8
AD3222H1	NOK	60X82X12!
AD3222I0	NOK	2001
AD3224E0	NOK	2001
AD3253E0	NOK	**470565**!
AD3259E0	NOK	**413247**!
AD3297F0	NOK	226285
AD3338E0	NOK	**471271**!
AD3338F	NOK	**471271**!
AD3338F0	NOK	**471271**!
AD3347E	NATSU	**415449**!
AD3347E0	NOK	**415449**!
AD3388	NOK	65X82X8
AD3388E	NOK	710094
AD3388E0	NOK	710094
AD3400L0	NOK	65X88X10
AD3400L0	NOK	65X88X8!
AD3409J0	NOK	226530
AD3409J0	NOK	65X90X10!
AD3440E0	NOK	**415458**
AD3459E0	NOK	68X90X10!
AD3459H0	NOK	226850
AD3478E	NATSU	**416664**!
AD3478E0	NOK	**416664**!
AD3480E0	NOK	**415984**!
AD3505H0	NOK	227020
AD3519K	NOK	70X92X12
AD3519K0	NOK	227045
AD3527H0	NOK	70X95X13
AD3532E0	NOK	227060
AD3553E0	NOK	**417485**
AD3573E	NATSU	**416921**!
AD3573E0	NOK	**416921**!
AD3574F0	NOK	**416921**!
AD3589E	NOK	**416654**
AD3589E0	NOK	**416654**
AD3590E0	NOK	**416654**!
AD3618I0	NOK	227550
AD3664E	NATSU	**415995**!
AD3664E0	NOK	**415995***
AD3664E0	NOK	**415995**!
AD3673E	NOK	**417487**!
AD3673E	NOK	**417487***
AD3673E0	NOK	**417487**!
AD3673E0	NOK	**417487***
AD3675E	NOK	**417488**!
AD3675E0	NOK	**417488**!
AD3704E	NOK	**416404**!
AD3704E0	NOK	**416404**!
AD3705E	NATSU	**417621**!
AD3705E0	NOK	**417621**!
AD3705E0	NOK	**417621***
AD3706F	NOK	**417621**
AD3706F0	NOK	**417621**
AD3708E	NATSU	**416288**!
AD3708E0	NOK	**416288**!
AD3744J0	NOK	228020
AD3795E	NOK	**476470**
AD3796E	NATSU	**476470**
AD3796E0	NOK	**476470**
AD3809E	NATSU	**418028**
AD3809E0	NOK	**418028***
AD3809E0	NOK	**418028**!
AD3842I0	NOK	228520
AD3891E	NATSU	**415991**
AD3891E	NATSU	476414=
AD3891E0	NOK	**415991**
AD3932J0	NOK	90X115X12
AD3963E	NATSU	**415937**!
AD3963E0	NOK	**415937**!
AD3994G0	NOK	229510
AD3994J2	NOK	95X120X12!
AD4017E0	NOK	**415379**
AD4017F	NATSU	**415379**
AD4019E0	NOK	**415035**
AD4019E0	NOK	**415035**!
AD4020E	NATSU	**416339**
AD4020E0	NOK	**416339**
AD4037E	NATSU	**416345**!
AD4037E0	NOK	**416345**!
AD4063A0	NOK	231003
AD4095E	NOK	**417506**
AD4095E0	NOK	**417506**
AD4109E	NATSU	**415035**
AD4109E0	NOK	**415035***
AD4109E0	NOK	**415035**!
AD4116E	NATSU	**417356**!
AD4116E0	NOK	**417506**
AD4180E	NATSU	**415196**!
AD4180E	NATSU	475196=
AD4180E0	NOK	**415196**!
AD4212A0	NOK	231108
AD4255E	NATSU	**416888**!
AD4255F1	NOK	**416888**!
AD4262E	NATSU	**416892**!
AD4262E0	NOK	**416892**!
AD4329E0	NOK	120X140X13
AD4346A0	NOK	231206
AD4362E	NATSU	**415138**!
AD4362E0	NOK	**415138**!
AD4370E	NOK	**415066**
AD4370E0	NOK	**415066**
AD4399A0	NOK	125X155X15
AD4443G	NOK	130X150X15
AD4443G0	NOK	130X150X10
AD4451A0	NOK	231302
AD4524E	NOK	**416107**!
AD4524E1	NOK	**416107**!
AD4542A0	NOK	140X170X15
AD4542A0	NOK	231404
AD4581A0	NOK	145X175X15
AD4601E	NOK	**416666**
AD4601E0	NOK	**416666**
AD4624A0	NOK	231502
AD4654E	NOK	**415072**
AD4654E0	NOK	**415072**
AD4713A0	NOK	160X190X15
AD4795A0	NOK	170X200X15
AD4795A0	NOK	231705
AD4898A0	NOK	231805
AD4898A3	NOK	180X210X15
AD5283A0	NOK	230X260X15
AD5341E	NOK	240X270X16!
AD5341E0	NOK	240X270X15!
AD5843E0	NOK	360X400X20
AD6299E0	NOK	**471733**
AD6787E0	NOK	**473197**!
AD6787E0	NOK	**473197***
AD6789E	NOK	**473235**!
AD6789E0	NOK	**473235**!
AD6858E0	NOK	5206
AD6890E	NOK	27X47X8
AD6890E0	NOK	27X47X10
AD6922E	NOK	**471733**
AD6942E0	NOK	**471231**!
AD7049Y	NOK	710051
AD7049Y0	NOK	35X47X7!
AD7049Y0	NOK	710051
AD7079E	NATSU	**416273**=
AD7079E	NATSU	**416273**
AD7079E0	NOK	**416273**
AD7079EO	NOK	**416273**
AD7079F0	NOK	**416273**
AD7079R	NOK	**416273**
AD7092E0	NOK	**472164**!

! Industrial Size/Type * Minor Width Difference

= The U.S. customer service number is 877-4-TIMKEN. The Canadian customer service numbers are 800-565-4927 (English) and 800-565-0438 (French-Canadian).

Mfr. No.	Name	Zero Duplication or Recommended Industrial
AD7095E0	NOK	472164!
AD7095E1	NOK	472164!
AD7095F0	NOK	472164!
AD7096E0	NOK	470712!
AD7110E0	NOK	471276=
AD7111E1	NOK	471538!
AD7127E0	NOK	471795
AD7127E1	NOK	471795
AD7149E0	NOK	472324!
AD7151E0	NOK	472179
AD7153F0	NOK	471272!
AD7175E0	NOK	471192
AD7268E	NOK	471764*
AD7268E	NOK	471764!
AD7268E0	NOK	471764!
AD7268E0	NOK	471764*
AD7282E	NATSU	416135!
AD7282E	NATSU	476135=
AD7282E0	NOK	416135!
AD7408E0	NOK	415960
AD7410E0	NOK	471138!
AD7410E1	NOK	471138!
AD7553E0	NOK	322353
AD7553E0	NOK	474278!
AD7591E0	NOK	453065
AD7613E0	NOK	412861
AD7625E0	NOK	471818
AD7643E0	NOK	471612
AD7646E0	NOK	472649
AD7646E1	NOK	472649
AD7647E0	NOK	472951!
AD7647E0	NOK	474252*
AD7651E0	NOK	472950*
AD7653E0	NOK	477104=
AD7654E0	NOK	473380
AD7656E0	NOK	472655
AD7657E1	NOK	472953
AD7658E0	NOK	473243
AD7662E0	NOK	472644
AD7665E0	NOK	471904*
AD7666E0	NOK	473427
AD7667E0	NOK	470596
AD7668E0	NOK	476820
AD7670E0	NOK	477105=
AD7671E0	NOK	476808=
AD7678E0	NOK	472660
AD7679E0	NOK	476878=
AD7680E0	NOK	472954
AD7683E0	NOK	472653!
AD7699E	NOK	470606!
AD7699E0	NOK	470606!
AD7700E	NOK	710410
AD7705E0	NOK	470806*
AD7706E0	NOK	472651=
AD7707E0	NOK	472642
AD7708E0	NOK	471276
AD7709E0	NOK	471281!
AD7710E0	NOK	473197!
AD7710E0	NOK	473197*
AD7758E0	NOK	471442!
AD7759E0	NOK	471472!
AD7760E0	NOK	471564
AD7761E0	NOK	471567!
AD7762E0	NOK	471643!
AD7763E0	NOK	471570!
AD7764E0	NOK	470590
AD7765E0	NOK	471689!
AD7766E0	NOK	471692!
AD7767E0	NOK	470712!
AD7767E1	NOK	470712!
AD7768E0	NOK	473203
AD7769E0	NOK	472475
AD7770E0	NOK	473205!
AD7771E	NOK	473210
AD7772E0	NOK	473211!
AD7773E0	NOK	473212!
AD7774E0	NOK	473213!
AD7775E0	NOK	473214!
AD7776E0	NOK	473215!
AD7777E0	NOK	473224!
AD7778E0	NOK	473016!
AD7779E0	NOK	473225!
AD7780E0	NOK	473226
AD7781E0	NOK	473227!
AD7782E0	NOK	470380!
AD7782E1	NOK	470380!
AD7783E0	NOK	473228!
AD7784E0	NOK	472213
AD7785E0	NOK	472299
AD7786E0	NOK	473229!
AD7787E	NOK	470682
AD7787E0	NOK	470682
AD7788E0	NOK	473230!
AD7789E0	NOK	473010!
AD7790E0	NOK	473232!
AD7791E0	NOK	473233!
AD7792E0	NOK	473234!
AD7793E0	NOK	473235
AD7794E0	NOK	473236!
AD7795E0	NOK	473237!
AD7796E0	NOK	472185!
AD7797E0	NOK	472179
AD7798E0	NOK	472439
AD7799E0	NOK	472572!
AD7800E0	NOK	473238!
AD7801E0	NOK	473239!
AD7802E0	NOK	473240!
AD7803E0	NOK	472319
AD7804E0	NOK	473241
AD7805E0	NOK	472144!
AD7806E0	NOK	472394
AD7807E0	NOK	472924!
AD7808E0	NOK	473242
AD7809E0	NOK	473204
AD7810E0	NOK	472015!
AD7810F0	NOK	472015=
AD7811E0	NOK	473517
AD7812E	NATSU	473243
AD7812E0	NOK	473243
AD7813E0	NOK	473244!
AD7814E0	NOK	472018
AD7815E0	NOK	472020
AD7816E0	NOK	473245!
AD7817E0	NOK	472636!
AD7818E	NATSU	413246
AD7818E0	NOK	413246!
AD7819E	NATSU	413247!
AD7819E0	NOK	413247!
AD7820E	NATSU	416271!
AD7820E0	NOK	416271!
AD7820E1	NOK	416271=
AD7821E0	NOK	470605!
AD7822E	NATSU	413248
AD7822E0	NOK	413248
AD7823E	NATSU	415483=
AD7823E	NATSU	415483
AD7823E0	NOK	415483
AD7824E0	NOK	415458!
AD7825E	NATSU	417343!
AD7825E0	NOK	417343!
AD7826E	NATSU	415984!
AD7826E0	NOK	415984!
AD7827E0	NOK	417316!
AD7828E	NATSU	415303!
AD7828E0	NOK	415303!
AD7829E	NATSU	417344!
AD7829E0	NOK	417344!
AD7830E	NATSU	417158!
AD7830E0	NOK	417158!
AD7831E	NATSU	417349!
AD7831E0	NOK	417349!
AD7832E	NATSU	417350!
AD7832E0	NOK	417350!
AD7833E	NATSU	417351!
AD7833E0	NOK	417351!
AD7834E	NATSU	417171!
AD7834E0	NOK	417171!
AD7835E0	NOK	417172
AD7836E	NATSU	417181!
AD7836E0	NOK	417181!
AD7837E	NATSU	417353!
AD7837E0	NOK	417353!
AD7838E	NATSU	416294!
AD7838E0	NOK	416294!
AD7839E	NATSU	412473!
AD7839E0	NOK	412473*
AD7839E0	NOK	412473!
AD7839E1	NOK	412473*
AD7839E1	NOK	412473!
AD7840E	NATSU	417191
AD7840E0	NOK	417191
AD7841E	NATSU	417354!
AD7841E0	NOK	417354!
AD7842E	NATSU	416624!
AD7842E0	NOK	416624!
AD7843E	NATSU	417196!
AD7843E0	NOK	417196!
AD7844E	NATSU	415437
AD7844E	NATSU	475437=
AD7844E0	NOK	415437
AD7845E	NATSU	416332!
AD7845E0	NOK	416332!
AD7845E0	NOK	416332*
AD7846E	NATSU	417355!
AD7846E0	NOK	417355!
AD7847E	NATSU	416125!
AD7847E0	NOK	416125!
AD7848E	NATSU	476041=
AD7848E0	NOK	416041
AD7849E	NATSU	417205!
AD7849E0	NOK	417205!
AD7850E	NATSU	417211!
AD7850E0	NOK	417211!
AD7851E	NATSU	415697!
AD7851E0	NOK	415697!
AD7852E	NATSU	417366!
AD7852E0	NOK	417366!
AD7853E	NATSU	417357
AD7853E0	NOK	417357
AD7854E	NATSU	416130!
AD7854E	NATSU	476130=
AD7854E0	NOK	416130!
AD7855E	NATSU	472157
AD7855E	NATSU	476556=
AD7855E0	NOK	416556!
AD7855E0	NOK	472157*
AD7856E	NATSU	416891!
AD7856E0	NOK	416891!
AD7857E	NATSU	416153!
AD7857E0	NOK	416153!
AD7858E	NATSU	417247!
AD7858E0	NOK	417247!
AD7859E	NATSU	415725!
AD7859E	NATSU	475725=
AD7859E0	NOK	415725!
AD7860E0	NOK	470625!
AD7860E1	NOK	470625!
AD7877E0	NOK	471821!
AD7898E0	NOK	472082
AD7915E0	NOK	417344=
AD8008E0	NOK	414268!
AD8011E0	NOK	473446
AD8014E0	NOK	471984
AD8018E0	NOK	451078!
AD8035E0	NOK	471379
AD8058E0	NOK	45X58X7!
AD8062E0	NOK	480630*
AD8062E0	NOK	480630!
AD8206E	NOK	710008
AD8206E0	NOK	710008
AD8209E	NOK	2009
AD8209E0	NOK	2009
AD8209F	NOK	2009
AD8213E0	NOK	473380
AD8217E0	NOK	471833
AD8236E0	NOK	471736
AD8360E0	NOK	471692!
AD8362E0	NOK	481443!
AD8377E0	NOK	481792
AD8404E0	NOK	471831!
AD8419E0	NOK	476281
AD8442E0	NOK	470774!
AD8465E0	NOK	471981
AD8466E0	NOK	471645
AD8473E0	NOK	470328
AD8473E0	NOK	481213!
AD8475E0	NOK	1215
AD8475E0	NOK	1215N
AD8480E	NOK	225110
AD8480E	NOK	51X65X7!
AD8480E0	NOK	50X65X8!
AD8527E0	NOK	473313!
AD8537E0	NOK	55X90X13
AD8541E0	NOK	477340=
AD8555E0	NOK	471958
AD8582E	NOK	710247
AD8582E0	NOK	1987
AD8582E0	NOK	710247
AD8717E0	NOK	413470!
AD8734E0	NOK	471344
AD8754E0	NOK	471835!
AD8948E0	NOK	470390
AD8948F	NOK	470390
AD8948F0	NOK	470390
AD8965E0	NOK	4250
AD9109E	NOK	457295
AD9109E0	NOK	457295
ADD012B0	NOK	38X74X11
ADD012B0	NOK	38X74X8!
ADD042A0	NOK	50X65X8!
ADD085A0	NOK	75X100X12!
ADD135A0	NOK	1176*
ADD135A0	NOK	38X65X8!
ADD714A0	NOK	20X30X7
AE-1677H	NOK	223014
AE-1677H0	NOK	223014
AE0134E0	NOK	8X16X7!
AE0145F0	NOK	220818
AE0145F0	NOK	8X18X7!
AE0205A0	NOK	9X22X7
AE0226E0	NOK	350156*
AE0279A0	NOK	10X25X7
AE0318E0	NOK	6863S!
AE0325H0	NOK	472810!
AE0328F0	NOK	6863S!
AE0371E0	NOK	12X22X7!
AE0382A0	NOK	12X25X7
AE0387E0	NOK	12X28X7

! Industrial Size/Type * Minor Width Difference

= The U.S. customer service number is 877-4-TIMKEN. The Canadian customer service numbers are 800-565-4927 (English) and 800-565-0438 (French-Canadian).

Mfr. No.	Name	Zero Duplication or Recommended Industrial
AE0442G	NOK	342613!
AE0442G0	NOK	342613!
AE0451E	NOK	**471442**!
AE0451F0	NOK	**471442**!
AE0452E	NOK	**471442**!
AE0514G0	NOK	14X24X7
AE0519J	NOK	710116
AE0519J0	NOK	14X25X5
AE0523E1	NOK	14X26X7
AE0526A0	NOK	14X30X7
AE0582E	NOK	2027
AE0582E0	NOK	15X24X7
AE0584F0	NOK	15X24X7
AE0586G	NOK	15X25X6
AE0586G0	NOK	15X25X5
AE0598A0	NOK	221540
AE0604E0	NOK	15X32X8
AE0654E0	NOK	**471264**!
AE0658E0	NOK	450557
AE0658E0	NOK	**471255**!
AE0678F1	NOK	16X26X7
AE0685G0	NOK	221610
AE0687A0	NOK	221620
AE0742L0	NOK	17X30X7
AE0743E0	NOK	17X30X7
AE0745E1	NOK	221720
AE0751H0	NOK	17X30X7
AE0751H0	NOK	221730
AE0760H0	NOK	17X35X7
AE0771F1	NOK	17X40X7
AE0815E	NOK	18X30X7!
AE0815E	NOK	221820
AE0815E0	NOK	18X30X7!
AE0815E0	NOK	221820
AE0817E0	NOK	18X30X7!
AE0817E0	NOK	221820
AE0823E0	NOK	18X32X8!
AE0829A0	NOK	18X35X7
AE0829E0	NOK	18X35X7
AE0870E0	NOK	19X32X8!
AE0870E0	NOK	221922
AE0875A	NOK	19X35X10!
AE0875A0	NOK	19X35X10!
AE0880E0	NOK	19X38X7
AE0900E0	NOK	1049
AE0913E0	NOK	**470954**!
AE0915F0	NOK	**470954**!
AE0917E0	NOK	221820
AE0929A0	NOK	18X35X7
AE0948E0	NOK	472237=
AE0955E0	NOK	222075
AE0984H0	NOK	20X30X7
AE0997E0	NOK	222020
AE1012G0	NOK	222030
AE1013A0	NOK	20X35X7!
AE1013A0	NOK	222030
AE1017F0	NOK	20X36X7
AE10212	WILYS	**471466**!
AE1029E0	NOK	222050
AE1032F0	NOK	20X40X7!
AE1032G0	NOK	20X40X10
AE1033A0	NOK	20X40X10
AE1035E0	NOK	20X42X10
AE1048P0	NOK	20X47X7
AE1139E0	NOK	22X40X7
AE1140E	NOK	22X40X7
AE1140E0	NOK	22X40X7
AE1145E0	NOK	22X42X10
AE1148A0	NOK	22X42X10
AE1148E0	NOK	22X42X10
AE1179E0	NOK	353132
AE1232E0	NOK	**471571**
AE1260A0	NOK	222430
AE1260A1	NOK	24X40X7!
AE1292G0	NOK	222510
AE1306E0	NOK	222535
AE1306K0	NOK	222535
AE1307E1	NOK	222535
AE1314A0	NOK	222541
AE1314A0	NOK	25X40X7!
AE1315F0	NOK	222541
AE1322F0	NOK	25X42X8!
AE1335E0	NOK	25X45X8
AE1337F0	NOK	25X45X8
AE1338A0	NOK	25X45X8
AE1351E0	NOK	222560
AE1351E0	NOK	25X47X7
AE1377F0	NOK	25X52X10
AE1377H0	NOK	25X52X7!
AE1442E0	NOK	222560
AE1450E0	NOK	**472138**
AE1452E0	NOK	**471516**!
AE1474A0	NOK	26X42X10
AE1512F	NOK	1990
AE1512F0	NOK	27X43X8!
AE1518A0	NOK	27X47X8
AE15290	WILYS	**471538**!
AE1558P	NOK	28X47X7!
AE1558P0	NOK	28X47X7!
AE1599E	NOK	**471652**
AE1666F0	NOK	1970
AE1679A0	NOK	223014
AE1679A0	NOK	30X45X5!
AE1679H0	NOK	1981
AE1679H0	NOK	30X45X8!
AE1679L0	NOK	1981
AE1692E1	NOK	223020
AE1692E1	NOK	30X47X7!
AE1705G0	NOK	30X50X7
AE1709A0	NOK	30X50X7
AE1723FO	NOK	223035
AE1736E0	NOK	30X55X10
AE17384	WILYS	**330385**
AE1820E0	NOK	322353
AE1820E0	NOK	**474278**!
AE1820F	NOK	322353
AE1820F	NOK	**474278**
AE1884E0	NOK	32X46X6!
AE1894G0	NOK	223240
AE1894G0	NOK	32X48X8!
AE1902E0	NOK	223255
AE1904A0	NOK	1167
AE1904A0	NOK	32X52X7!
AE1952E	NOK	1953
AE1952E0	NOK	1953
AE1952E0	NOK	42X60X7!
AE2005E0	NOK	**472258**!
AE2011E0	NOK	**471192***!
AE2022E	NOK	**450456**!
AE2022E0	NOK	323125
AE2022E0	NOK	**450456**!
AE2041E	NOK	223510
AE2048F3	NOK	35X47X7!
AE2048M	NOK	1108
AE2057A0	NOK	223520!
AE2060G0	NOK	35X50X8!
AE2067E1	NOK	35X52X8!
AE2068E0	NOK	223535
AE2071F0	NOK	223535
AE2072E0	NOK	223535
AE2072F0	NOK	35X52X8!
AE2081	NOK	35X55X11
AE2081E0	NOK	35X55X8!
AE2081EO	NOK	223542
AE2081I	NOK	223540
AE2081IO	NOK	223540
AE2085A	NOK	35X55X8!
AE2085A0	NOK	35X55X11!
AE2094E0	NOK	35X56X10!
AE2108E0	NOK	35X60X10!
AE2218E0	NOK	38X50X7!
AE2231E	NOK	223831
AE2231E0	NOK	223831
AE2231E0	NOK	38X55X7!
AE2240-A0	NOK	1175
AE2240-A0	NOK	38X58X8!
AE2240-A0	NOK	710319
AE2240J0	NOK	223842
AE2280E	NOK	**470625**!
AE2343E0	NOK	224015
AE2343E0	NOK	40X52X7!
AE2359H	NOK	224020
AE2359H	NOK	40X55X8!
AE2359H0	NOK	224020
AE2365E0	NOK	224026
AE2365G	NOK	224026
AE2369A0	NOK	40X58X10!
AE2375E0	NOK	40X60X10!
AE2386H	NOK	224045
AE2386H	NOK	40X62X8!
AE2386H1	NOK	224045
AE2386H1	NOK	40X62X12!
AE2388A0	NOK	224045
AE2390K0	NOK	224045
AE2403I	NOK	710269
AE2405E1	NOK	40X65X10
AE2419E	NOK	350572
AE2420E0	NOK	40X72X7
AE2420F	NOK	710523
AE2426G	NOK	710113
AE24599	JOHND	**470380**!
AE2483E0	NOK	224210
AE2492E	NOK	1953
AE2492E0	NOK	1953
AE2492E0	NOK	42X60X7!
AE2493E0	NOK	1953
AE2493J	NOK	1953
AE2493J	NOK	42X60X7!
AE2507A1	NOK	42X65X10!
AE2520F	NOK	710195
AE2520F0	NOK	710195
AE2589E0	NOK	**472164**!
AE2596E0	NOK	323119
AE2643E0	NOK	224520
AE2643E1	NOK	224520
AE2644W0	NOK	45X60X10!
AE2650E0	NOK	1012
AE2650E0	NOK	1012N
AE2650E0	NOK	45X62X8!
AE2651A0	NOK	1185
AE2651A0	NOK	45X62X8!
AE2653E	NOK	1012
AE2653E	NOK	1012N
AE2653E0	NOK	1012
AE2653E0	NOK	1012N
AE2653E0	NOK	45X62X8!
AE2658W0	NOK	45X65X8!
AE2666E0	NOK	224560
AE2668A0	NOK	224560
AE2668R	NOK	45X68X7!
AE2668R0	NOK	224560
AE2668R0	NOK	45X68X7!
AE2668Y	NOK	224560
AE2668Y	NOK	45X68X7!
AE2668Y0	NOK	224560
AE2668Y0	NOK	45X68X7!
AE2676E0	NOK	45X70X10
AE2685N	NOK	710270
AE2774E0	NOK	48X62X8!
AE2774F	NOK	224810
AE2774G	NOK	224810
AE2774G0	NOK	224810
AE2774G03X1	NOK	224810
AE2775E0	NOK	224820
AE2780F0	NOK	224820
AE2786E	NOK	1945
AE2786E	NOK	228480
AE2786E0	NOK	1945
AE2786E0	NOK	228480
AE2788H	NOK	1994
AE2788H	NOK	48X70X9!
AE2788H1	NOK	1994
AE2788H1	NOK	48X70X9!
AE2791A0	NOK	1994
AE2808E	NOK	710305
AE2808E0	NOK	710305
AE2831E	NOK	225005
AE2847E0	NOK	225020
AE2847Y0	NOK	50X68X8!
AE2854E0	NOK	1189
AE2862E1	NOK	225035
AE2862E1	NOK	50X72X8!
AE2864A0	NOK	225035
AE2864G0	NOK	50X72X8!
AE2864P	NOK	225035*
AE28879	JOHND	**481181**!
AE2888E	NOK	50X80X8
AE2888E0	NOK	225050
AE2919E0	NOK	**472492**!
AE2942E0	NOK	**410102**
AE2955E0	NOK	52X65X9!
AE2960F	NOK	225230
AE2960F	NOK	52X72X8!
AE2960F0	NOK	225230
AE2960F0	NOK	52X72X8!
AE29658	JOHND	5650
AE2965F1	NOK	52X75X12
AE2967A0	NOK	52X75X12
AE3012E0	NOK	54X72X10!
AE3040A0	NOK	225530
AE30471	JOHND	**471760**
AE3055A0	NOK	55X78X10
AE3072F0	NOK	55X85X10
AE3103E	NOK	1984
AE3148F1	NOK	225875
AE3148F1	NOK	58X75X11
AE3154A0	NOK	225880
AE3193F0	NOK	60X75X8
AE3222A0	NOK	2001
AE3222H0	NOK	60X82X12!
AE3290E0	NOK	62X80X10
AE3290E2	NOK	62X80X10
AE3297A0	NOK	226285
AE3297A0	NOK	62X85X8!
AE3400A0	NOK	65X88X10
AE3400A0	NOK	65X88X8!
AE3409A0	NOK	226530
AE3409Q0	NOK	65X90X10!
AE3519A0	NOK	227045
AE3519A2	NOK	70X92X12
AE3521E0	NOK	227045
AE3527E	NOK	70X95X10
AE3527E0	NOK	70X95X13
AE3611E0	NOK	75X95X10!
AE3618A0	NOK	227550
AE3618A0	NOK	75X100X12!
AE3733G0	NOK	80X100X10!
AE3744A0	NOK	228020

! Industrial Size/Type * Minor Width Difference

= The U.S. customer service number is 877-4-TIMKEN. The Canadian customer service numbers are 800-565-4927 (English) and 800-565-0438 (French-Canadian).

Mfr. No.	Name	Zero Duplication or Recommended Industrial
AE37476	*JOHND*	**415449**!
AE37477	*JOHND*	**471831**!
AE3786E	*NOK*	1945
AE3786E	*NOK*	228480
AE3786E	*NOK*	82X105X13!
AE3786E0	*NOK*	1945
AE3786E0	*NOK*	228480
AE3842A0	*NOK*	228520
AE3932A0	*NOK*	90X115X12
AE3994A0	*NOK*	229510
AE4007E0	*NOK*	229520
AE4007E0	*NOK*	95X130X12!
AE4054P0	*NOK*	100X120X12*
AE4054P0	*NOK*	231004
AE4063A0	*NOK*	100X125X12!*
AE4063F0	*NOK*	231003
AE4212H1	*NOK*	231108
AE4221E0	*NOK*	110X145X12
AE4341H0	*NOK*	231206
AE4346H0	*NOK*	120X150X12
AE4346H0	*NOK*	231206
AE4355E0	*NOK*	120X155X15
AE4451F0	*NOK*	130X160X12
AE4451F0	*NOK*	231302
AE4542E0	*NOK*	231404
AE4581E0	*NOK*	145X175X15
AE4624F0	*NOK*	150X180X15
AE4624F1	*NOK*	150X180X12
AE4624F1	*NOK*	231502
AE4898E0	*NOK*	231805
AE6873E0	*NOK*	**474272**!
AE6873E0	*NOK*	**474272***
AE6901E	*NOK*	2007N
AE6922E0	*NOK*	**471733**
AE7103E	*NOK*	204020
AE7103E	*NOK*	204505*
AE7126E0	*NOK*	**473197***
AE7126E0	*NOK*	**473197**!
AE7139E0	*NOK*	**415001**!
AE7145E1	*NOK*	**473259***
AE7145E1	*NOK*	**473259**!
AE7150E0	*NOK*	**473427**
AE7175E0	*NOK*	**471192**
AE7333G0	*NOK*	50X65X8!
AE7362E	*NOK*	223553
AE7362E0	*NOK*	35X62X7!
AE7368E	*NOK*	**481163**
AE7368E0	*NOK*	**481163**
AE7431E0	*NOK*	**416154**!
AE7617E0	*NOK*	**471529**
AE7642E0	*NOK*	**471612**
AE7644E0	*NOK*	**471549**!
AE7644E0	*NOK*	472467
AE7646E0	*NOK*	**472649**
AE7655E0	*NOK*	75X115X10*
AE7655E0	*NOK*	75X115X12
AE7660E0	*NOK*	226550
AE7660E0	*NOK*	65X100X10
AE7663E0	*NOK*	476513=
AE7676E0	*NOK*	**473490**
AE7694E0	*NOK*	**350974**!
AE7698E0	*NOK*	**471498**
AE7705E0	*NOK*	**470806***
AE7708E0	*NOK*	**471276***
AE7739E0	*NOK*	321460
AE7766E0	*NOK*	**471692**!
AE7772E0	*NOK*	**473211**!
AE7782F0	*NOK*	**470380**!
AE7869E0	*NOK*	**472324**!
AE7872E0	*NOK*	17X35X7
AE7912E0	*NOK*	222560
AE7925E0	*NOK*	473196=
AE7939E0	*NOK*	**472311**!
AE8004E0	*NOK*	351487
AE8013E0	*NOK*	**471076**
AE8073E0	*NOK*	**415082**
AE8326E	*NOK*	221540
AE8364E0	*NOK*	**471570**!
AE8379E	*NOK*	224252
AE8379E0	*NOK*	224252
AE8379E0	*NOK*	42X62X8!
AE8427E0	*NOK*	**471766**!
AE8441E0	*NOK*	323133
AE8444E0	*NOK*	17X27X7
AE8472E0	*NOK*	30X62X7
AE8548E0	*NOK*	323126
AE8548E0	*NOK*	**474278**!
AE8558E0	*NOK*	**472238***
AE8798G	*NOK*	42X62X8!
AE8903E0	*NOK*	7214
AE8907E	*NOK*	223240
AEA9239A	*FAIRB*	**471442**!
AEC621	*LEYLD*	**471195**!
AEE052A0	*NOK*	40X55X8
AEE059A0	*NOK*	25X35X7!
AEE060A0	*NOK*	20X35X7!
AEE128A0	*NOK*	35X47X7!
AEE159A0	*NOK*	25X40X7!
AEE212A0	*NOK*	42X60X7!
AEE279A0	*NOK*	85X110X12!
AEE295A	*NOK*	40X62X8!
AEE295A0	*NOK*	40X62X12!
AEE338A0	*NOK*	25X37X7!
AEE376A0	*NOK*	14X24X7
AEE394A0	*NOK*	35X47X7!
AEE456B0	*NOK*	30X42X7!
AEE477A0	*NOK*	65X85X10
AEE479A0	*NOK*	70X90X10!
AEE488A0	*NOK*	105X125X13
AEE514A0	*NOK*	15X25X6
AEE523A0	*NOK*	14X28X6
AEE615A0	*NOK*	35X62X7!
AEE699A0	*NOK*	60X80X8!
AEE752A0	*NOK*	85X130X13
AEE920A0	*NOK*	50X90X10
AEE984A0	*NOK*	50X65X8!
AEK3003	*DENCO*	**473224**!
AEO9524	*MASSE*	**472164**!
AER01889	*AVCO*	**471549**!
AER01956	*AVCO*	**471554**!
AER01959	*AVCO*	**450342**
AER01959B	*AVCO*	**450342**
AERO583D	*AVCO*	455022
AERO610O	*AVCO*	**450173**
AEX38757	*GMC*	**471231**!
AF0103E0	*NOK*	340826
AF0222E0	*NOK*	311189
AF0226E0	*NOK*	350156*
AF0369E	*NOK*	12X22X7!
AF0369E0	*NOK*	12X22X7!
AF0433E0	*NOK*	342805
AF0437G	*NOK*	43095S!
AF0437G0	*NOK*	43095S!
AF0544E0	*NOK*	**472705**!
AF0633E	*NOK*	340849
AF0636E0	*NOK*	7399S!
AF0654E0	*NOK*	**471264**
AF0741F	*NOK*	17X30X7
AF0749E1	*NOK*	17X32X7!
AF0770E0	*NOK*	17X40X7
AF0888F0	*NOK*	312518!
AF0888F0	*NOK*	342518
AF1035E	*NOK*	20X42X10
AF1035E0	*NOK*	20X42X10!
AF1035E0	*NOK*	20X42X7
AF1035E0	*NOK*	222060
AF1075E0	*NOK*	**471645***
AF1124E0	*NOK*	22X35X7
AF1155R	*JOHND*	**472016**
AF1156R	*JOHND*	**415458**!
AF1177E0	*NOK*	7014S
AF1178E	*NOK*	7014S
AF1178E0	*NOK*	7014S
AF1181E	*NOK*	**471267**
AF1181E0	*NOK*	**471267**
AF1190A	*FORD*	6815
AF1190A1	*FORD*	6815
AF1190A2	*FORD*	6815
AF1399E0	*NOK*	240731
AF1402F0	*NOK*	441130N=
AF1473E	*NOK*	26X42X10
AF1576R	*JOHND*	**330385**!
AF1588F0	*NOK*	340835
AF1591E0	*NOK*	312140
AF1609E0	*NOK*	203020
AF1616E0	*NOK*	203003
AF1663E0	*NOK*	30X42X7!
AF1703E	*NOK*	30X50X7
AF1778E	*NOK*	**471765**
AF1778E0	*NOK*	**471765**
AF1789E0	*NOK*	441319
AF1790E0	*NOK*	441319
AF1815G0	*NOK*	343186
AF1826E0	*NOK*	**471413**
AF1836F0	*NOK*	203029
AF1837E0	*NOK*	204029
AF1837E0	*NOK*	204507!
AF1925	*JOHND*	**471224**!
AF1934R	*JOHND*	**323138**!
AF2018F0	*NOK*	42763
AF2033E	*NOK*	35X45X7
AF2135R	*JOHND*	**471442**!
AF2221F	*NOK*	38X52X8.5!
AF2221W	*NOK*	1196
AF2221W0	*NOK*	1196
AF2264F0	*NOK*	**253099**
AF2272E0	*NOK*	**480630**!
AF2284E	*NOK*	203013
AF2284E0	*NOK*	203013
AF2284F0	*NOK*	204013
AF2285E	*NOK*	204013
AF2285F0	*NOK*	203013
AF2285G0	*NOK*	204013
AF2340F0	*NOK*	40X52X7!
AF2367E0	*NOK*	40X58X10!
AF2399E	*NOK*	224100
AF2399E	*NOK*	40X65X10!
AF2458F0	*NOK*	204017
AF2480E0	*NOK*	42X55X8!
AF2533E0	*NOK*	40154S
AF2535E0	*NOK*	**473235**
AF2548E0	*NOK*	442251
AF2548E0	*NOK*	473336!
AF2592E	*NOK*	205015
AF2592E0	*NOK*	205015
AF2597E0	*NOK*	204038
AF2640E0	*NOK*	224520
AF2640E0	*NOK*	45X60X10!
AF2643R	*JOHND*	**471341**!
AF2655E	*NOK*	1992
AF2655E0	*NOK*	1992
AF2655E0	*NOK*	45X65X8!
AF2659	*JOHND*	**415035**
AF2659R	*JOHND*	**415035**
AF2749E0	*NOK*	**350936**
AF2772E0	*NOK*	48X62X8!
AF2788R	*JOHND*	**474276**!
AF2861E0	*NOK*	50X72X8!
AF2911R	*JOHND*	450129
AF2911R	*JOHND*	**472826**!
AF2920R	*JOHND*	**474276**!
AF2936E	*NOK*	**473463**
AF2993F0	*NOK*	40566S
AF3034E	*NOK*	225505
AF3034E	*NOK*	55X70X8!
AF3034E0	*NOK*	225505
AF3034E0	*NOK*	55X70X8!
AF3044F0	*NOK*	1207
AF3044F0	*NOK*	1207N
AF3065E	*NOK*	55X82X12!
AF3065E0	*NOK*	55X82X12!
AF3134E	*NOK*	**412920**
AF3135G	*NOK*	**412920**
AF3135G1	*NOK*	**412920**
AF316R	*JOHND*	**417181**!
AF3171F0	*NOK*	442874
AF3240E	*NOK*	60X90X10
AF3240E0	*NOK*	60X90X8
AF3614E0	*NOK*	75X100X12!
AF3729E	*NOK*	228010
AF3729E	*NOK*	80X100X10!
AF3729E0	*NOK*	80X100X10!
AF545R	*JOHND*	**472185**!
AF7103E1	*NOK*	204020
AF7103E1	*NOK*	204505!
AF7133E0	*NOK*	204029
AF7133E0	*NOK*	204507!
AF7172E1	*NOK*	440972
AF7276E	*NOK*	291099
AF7276E0	*NOK*	291099
AF7286E0	*NOK*	7840S
AF7380E	*NOK*	**473229**!
AF7386E0	*NOK*	340827
AF7593E	*JOHND*	204008
AF7593E0	*NOK*	203008
AF7599E0	*NOK*	**481481**
AF7604F0	*NOK*	204005
AF77047A	*FORD*	**471652**
AF77047A	*FORD*	482208!
AF77047A2	*FORD*	**471652**
AF77047A3	*FORD*	**471652**
AF7756E0	*NOK*	340388
AF7863E	*NOK*	3095
AF7863E0	*NOK*	3095
AF7936E0	*NOK*	340356
AF8005E0	*NOK*	342517
AF8021E0	*NOK*	41075S
AF8057E0	*NOK*	204038
AF8063E0	*NOK*	204035
AF8088E0	*NOK*	45X62X8!
AF8088F	*NOK*	494122
AF8224E0	*NOK*	340900
AF8225E0	*NOK*	41461S
AF8374E	*NOK*	203020
AF8374E0	*NOK*	203020
AF8389E0	*NOK*	8430S
AF8413E0	*NOK*	8974S
AF8418E0	*NOK*	**476838**!
AF8426E0	*NOK*	441319
AF8495E0	*NOK*	41461S
AF8496E0	*NOK*	291099
AF8521E0	*NOK*	342517
AF8522E0	*NOK*	1987
AF8534E0	*NOK*	340850
AF8713E0	*NOK*	204020
AF8713E0	*NOK*	204505!
AF8729E	*NOK*	343104
AF8729E0	*NOK*	343104

! Industrial Size/Type * Minor Width Difference

= The U.S. customer service number is 877-4-TIMKEN. The Canadian customer service numbers are 800-565-4927 (English) and 800-565-0438 (French-Canadian).

Mfr. No.	Name	Zero Duplication or Recommended Industrial
AF8741E	*NOK*	**480630**
AF8741E0	*NOK*	**480630**
AF8782E0	*NOK*	351487
AF8933E0	*NOK*	7934S
AF8934E	*NOK*	9015S
AF8934E0	*NOK*	9015S
AF9155E	*NOK*	8975S
AF9155E0	*NOK*	8975S
AFF133A0	*NOK*	45X65X8!
AFS1180	*EL-WH*	204035
AFS1180E	*EL-WH*	204035
AFS2130P	*EL-WH*	204038
AFS2782	*EL-WH*	204013
AFS3549A	*EL-WH*	41461S
AFX43053	*JOHND*	**472185**!
AG-JB230	*CONTI*	**471529**
AG0102E0	*NOK*	340826
AG0103E0	*NOK*	340826
AG0204A	*NOK*	9X22X7
AG0204A0	*NOK*	9X22X7
AG0213E0	*NOK*	**330385**
AG0220E1	*NOK*	340827
AG0324E0	*NOK*	343101
AG0369E	*NOK*	12X22X7!
AG0369E0	*NOK*	12X22X7!
AG0433H0	*NOK*	342805
AG0433I0	*NOK*	342805
AG0437E0	*NOK*	340847
AG0443E0	*NOK*	342613!
AG0456E0	*NOK*	**471526**!
AG0514E0	*NOK*	14X24X7
AG0596A0	*NOK*	15X30X7
AG0645E0	*NOK*	**471466**
AG0686A	*NOK*	16X30X7
AG0743E0	*NOK*	17X30X7
AG0757A	*NOK*	17X35X7
AG0757A0	*NOK*	17X35X7
AG0802E	*NOK*	710222
AG0802E0	*NOK*	710222
AG0807E0	*NOK*	18X28X6
AG0888G0	*NOK*	312518!
AG0888G0	*NOK*	342518
AG0962F0	*NOK*	710249
AG1035E	*NOK*	20X42X10
AG1035E0	*NOK*	20X42X10
AG1169E0	*NOK*	240733
AG1171E0	*NOK*	340850
AG1173E0	*NOK*	**254287**
AG1179F0	*NOK*	340413
AG1399E0	*NOK*	343098
AG1473A	*NOK*	26X42X10
AG1517A	*NOK*	27X47X10
AG1535E0	*NOK*	28X40X7!
AG1588E0	*NOK*	340835
AG1593F0	*NOK*	1037
AG1608E0	*NOK*	323133
AG1703A	*NOK*	30X50X7
AG1815E0	*NOK*	343186
AG1862E0	*NOK*	32X42X8!
AG2039F0	*NOK*	35X47X7!
AG2064E0	*NOK*	35X52X8!
AG2225F	*NOK*	1174
AG2225F	*NOK*	38X52X8.5!
AG2225F0	*NOK*	1174
AG2225F0	*NOK*	38X52X8.5!
AG2272E0	*NOK*	7537S
AG2340E0	*NOK*	224015
AG2340E0	*NOK*	40X52X7!
AG2341E0	*NOK*	40X52X7!
AG2367A0	*NOK*	40X58X10!
AG2386F	*NOK*	224045
AG2386F	*NOK*	40X62X8!
AG2386F0	*NOK*	224045
AG2386F0	*NOK*	40X62X12!
AG2399E	*NOK*	224100
AG2399E	*NOK*	40X65X10!
AG2458E0	*NOK*	473117
AG2515W	*NOK*	224270
AG2515W0	*NOK*	224270
AG2515W0	*NOK*	42X72X10!
AG2538Y	*NOK*	1183
AG2538Y0	*NOK*	1183
AG2538Y0	*NOK*	43X55X8!
AG2580F0	*NOK*	**473237**
AG2640E0	*NOK*	224520
AG2640E0	*NOK*	45X60X10!
AG2649A0	*NOK*	45X62X8!
AG2755	*NOK*	1956
AG2755G	*NOK*	1956
AG2755H	*NOK*	1956
AG2772Y	*NOK*	1188
AG2772Y0	*NOK*	1188
AG2772Y0	*NOK*	48X62X8!
AG2775	*NOK*	1956
AG2775G	*NOK*	1956
AG2775H	*NOK*	1956
AG2775Y	*NOK*	1956
AG2775Y0	*NOK*	1956
AG2775Y0	*NOK*	48X62X8!
AG2776Y0	*NOK*	48X62X8!
AG2806E	*NOK*	1977
AG2806E0	*NOK*	1977
AG2965A	*NOK*	52X75X12
AG2965A0	*NOK*	52X75X12
AG3038A0	*NOK*	55X72X8!
AG3151E0	*NOK*	58X80X8
AG3217A0	*NOK*	60X82X12!
AG3398A0	*NOK*	65X88X10
AG3398A0	*NOK*	65X88X8!
AG3503E0	*NOK*	70X88X12
AG3503E0	*NOK*	70X88X8!
AG3505E0	*NOK*	70X88X8!
AG3516A0	*NOK*	70X92X12
AG3739A	*NOK*	80X105X14!
AG3739A0	*NOK*	80X105X13!
AG3839A0	*NOK*	85X110X12!
AG3990E0	*NOK*	95X120X12!
AG4059E0	*NOK*	100X125X12*
AG6759A0	*NOK*	28X48X8!
AG6762A	*NOK*	70X95X13
AG6762A0	*NOK*	70X95X10
AG6799Y0	*NOK*	1974
AG6900E	*NOK*	7537S
AG6900E0	*NOK*	7537S
AG6956E0	*NOK*	**471442**
AG7148E	*NOK*	221510
AG7148E0	*NOK*	15X25X6
AG7386E0	*NOK*	340827
AG7756E0	*NOK*	340387
AG7927E0	*NOK*	340826
AG8028E	*NOK*	1952
AG8028EO	*NOK*	1952
AG8372E0	*NOK*	350877
AG8372E0	*NOK*	**471633**!
AG8409E0	*NOK*	342613!
AG8483E0	*NOK*	42X62X8!
AG8550E	*NOK*	1943
AG8550F0	*NOK*	1943
AG8551E	*NOK*	494117
AG8756E0	*NOK*	340849
AG8796E0	*NOK*	**3395**
AG8796E0	*NOK*	352444!
AG8907E	*NOK*	223210
AG8936E0	*NOK*	340930
AGX49415	*JOHND*	340400
AGX82378A	*JOHND*	**472016**
AGX82379A	*JOHND*	**415458**!
AGX96442	*JOHND*	**472560N**
AGX97454	*JOHND*	**471466**!
AGY16W	*JOHND*	**471766**!
AH0687E	*NOK*	221620
AH0687E0	*NOK*	16X30X7
AH0736F	*NOK*	17X28X7
AH0736F0	*NOK*	17X28X7!
AH0736F0	*NOK*	221710
AH0736G0	*NOK*	221710
AH0736H	*NOK*	16X28X7!
AH0736H	*NOK*	221710
AH0736H0	*NOK*	16X28X7
AH0736I	*NOK*	221710
AH0815E0	*NOK*	221820
AH0816-E	*NOK*	221820
AH0816E0	*NOK*	18X30X7!
AH0875A0	*NOK*	710445*
AH0984E	*NOK*	222025!
AH0984F0	*NOK*	20X30X7
AH0984G	*NOK*	222025!
AH10466	*JOHND*	456744N
AH10888	*JOHND*	8792S
AH11966	*JOHND*	**474274**
AH1260E0	*NOK*	24X40X7!
AH1260G	*NOK*	222540
AH1260G	*NOK*	25X40X7!
AH1260G0	*NOK*	222540
AH1292E0	*NOK*	222510
AH1292F0	*NOK*	712007
AH1292H	*NOK*	712007
AH1292H0	*NOK*	712007
AH1292I	*NOK*	222510
AH1302F0	*NOK*	25X37X7!
AH1314F	*NOK*	222540
AH1314F0	*NOK*	25X40X7!
AH14076	*JOHND*	**471192**
AH14080	*JOHND*	240736
AH14219	*JOHND*	**471689**!
AH15048	*JOHND*	**471760**
AH1508E	*NOK*	712009
AH1512E	*NOK*	1990
AH1512E0	*NOK*	1990
AH1512F	*NOK*	1990
AH1512F0	*NOK*	1990
AH1512J	*NOK*	1990
AH1512J0	*NOK*	223535
AH1512K	*NOK*	1990
AH1512K0	*NOK*	222743
AH1513F	*NOK*	222745
AH1513F	*NOK*	27X45X8!
AH1513F0	*NOK*	222745
AH15256	*JOHND*	340136
AH1538G	*NOK*	222820
AH1538H	*NOK*	222820
AH1538P0	*NOK*	28X40X7!
AH1544F0	*NOK*	28X42X8!
AH1544F0	*NOK*	712008
AH1558H	*NOK*	224025
AH1558HO	*NOK*	222860
AH1558PO	*NOK*	222860
AH16581	*JOHND*	**473231**
AH16581H	*JOHND*	**473231**!
AH1665E0	*NOK*	223010
AH1666K	*NOK*	223010
AH1666K0	*NOK*	223010
AH1673F0	*NOK*	30X44X7!
AH1679L0	*NOK*	30X45X5!
AH1679N0	*NOK*	30X45X8!
AH1688E0	*NOK*	223018
AH1688E0	*NOK*	30X46X7!
AH1688F	*NOK*	223018
AH1688F0	*NOK*	223018
AH1706	*NOK*	30X50X7
AH1706E	*NOK*	223050
AH1706E0	*NOK*	223050
AH1706F	*NOK*	223050
AH1706F0	*NOK*	223050
AH17256	*JOHND*	**451857**
AH17911	*JOHND*	**473452**
AH1880G0	*NOK*	223230
AH1880G0	*NOK*	32X45X7!
AH1888E0	*NOK*	32X47X7!
AH1888E0	*NOK*	710310
AH1888G0	*NOK*	223230
AH1893E	*NOK*	223240
AH1893E	*NOK*	32X48X8!
AH1893E0	*NOK*	223240
AH1895E	*NOK*	223240
AH1895E	*NOK*	32X48X8!
AH1895E0	*NOK*	223240
AH1895E0	*NOK*	32X48X8!
AH1904F	*NOK*	1167
AH1904G	*NOK*	223252
AH1904G0	*NOK*	223252
AH1904G00X1	*NOK*	223252
AH19415	*JOHND*	200763
AH1968F0	*NOK*	223420
AH1968G	*NOK*	223420
AH1968G0	*NOK*	223420
AH1971G	*NOK*	223430
AH1971G	*NOK*	710417
AH1971Y	*NOK*	223430
AH1971Y	*NOK*	710417
AH1971Y0	*NOK*	223430
AH1971Y0	*NOK*	710417
AH19842	*JOHND*	**472070**=
AH1986G	*NOK*	223420
AH2057J0	*NOK*	713771
AH2057JO	*NOK*	713771
AH2057P	*NOK*	35X50X8!
AH2057P	*NOK*	3771
AH2057P0	*NOK*	3771
AH2057Q	*NOK*	3771
AH2057Q0	*NOK*	3771
AH2057R	*NOK*	3771
AH2057R0	*NOK*	3771
AH2060E	*NOK*	3771
AH2060E0	*NOK*	35X50X8!
AH2060E0	*NOK*	3771
AH2060G	*NOK*	3771
AH2060G0	*NOK*	3771
AH2060W	*NOK*	710324
AH2060W0	*NOK*	710324
AH2060Y	*NOK*	3771
AH2060Y0	*NOK*	3771
AH2067F0	*NOK*	35X52X8!
AH2077F	*NOK*	710331
AH2077F0	*NOK*	35X54X8!
AH2077F0	*NOK*	710331
AH2077G	*NOK*	710331
AH2077G0	*NOK*	710331
AH2077H0	*NOK*	710331
AH2077I	*NOK*	1119
AH2077I	*NOK*	710331
AH2083E	*NOK*	223540
AH2083G	*NOK*	223540
AH2083G	*NOK*	35X55X8!
AH2083G0	*NOK*	35X55X11!
AH2085G	*NOK*	223542
AH2085G	*NOK*	35X55X11!
AH2085G0	*NOK*	223542

! Industrial Size/Type * Minor Width Difference

= The U.S. customer service number is 877-4-TIMKEN. The Canadian customer service numbers are 800-565-4927 (English) and 800-565-0438 (French-Canadian).

Mfr. No.	Name	Zero Duplication or Recommended Industrial
AH2093F	NOK	2007N
AH2093F1	NOK	2007N
AH2093G0	NOK	2007N
AH2093G0	NOK	35X56X10!
AH2093H0	NOK	2007N
AH2093I0	NOK	2007N
AH2132E0	NOK	35X62X10
AH2134F	NOK	1173
AH2136E0	NOK	35X68X10!
AH2136G	NOK	223580
AH2136G0	NOK	1140
AH2136G0	NOK	223580
AH2145F0	NOK	1147
AH2145G0	NOK	1147
AH21815	JOHND	**472258**!
AH21870	JOHND	**470605**
AH2200E0	NOK	710259
AH2201F	NOK	1177
AH2216E0	NOK	223802
AH2216E0	NOK	38X50X7!
AH2218E0	NOK	223802
AH2218E0	NOK	38X50X7!
AH2218L	NOK	223802
AH2219E	NOK	223802
AH2219E0	NOK	223802
AH2222F	NOK	1205
AH2222F	NOK	38X52X8.5!
AH2222F0	NOK	1205
AH2231P	NOK	223830
AH2231P0	NOK	223830
AH2231P0	NOK	38X55X7!
AH2240I	NOK	223840
AH2240J	NOK	223840
AH2240J0	NOK	38X58X8!
AH2245F	NOK	38X60X10
AH2245F0	NOK	38X60X10!
AH2261EO	NOK	38X74X8!
AH2304-H0	NOK	710318
AH2304P0	NOK	223840
AH2341E	NOK	710308
AH2341E0	NOK	1217*
AH2341E0	NOK	710308
AH2342F0	NOK	224052
AH2342G	NOK	224015
AH2342G0	NOK	224015
AH2342G0	NOK	40X52X7!
AH2342H	NOK	224052
AH2359P	NOK	224020
AH2359P0	NOK	224020
AH2359P0	NOK	40X55X8!
AH2361E0	NOK	224020
AH2365E0	NOK	224026
AH2369G	NOK	3459
AH2369G0	NOK	40X58X10!
AH2386G	NOK	40X62X8!
AH2386G0	NOK	40X62X12!
AH2414E0	NOK	224068
AH2426E	NOK	712011
AH2426E0	NOK	712011
AH2443E0	NOK	1181
AH2444F0	NOK	1181
AH2444F0	NOK	41X56X7!
AH2480E0	NOK	42X55X8!
AH2483E0	NOK	224205
AH2483E0	NOK	42X55X8!
AH2486F	NOK	224220
AH2486F	NOK	494117
AH2486F0	NOK	224220
AH2486F0	NOK	42X56X7!
AH2492E0	NOK	1953
AH2492E0	NOK	42X60X7!
AH2492G0	NOK	2025
AH2492I	NOK	1953
AH2492I0	NOK	1953
AH2492J	NOK	1953
AH2492J0	NOK	1953
AH2493F	NOK	2025
AH2493G0	NOK	42X60X7!
AH2493P	NOK	2025
AH2493P0	NOK	2025
AH2507P	NOK	417494
AH2507P0	NOK	417494
AH25329	JOHND	43290S
AH2554F0	NOK	224460
AH2554F0	NOK	44X60X10!
AH2554G	NOK	224460
AH2554G0	NOK	224460
AH2554H	NOK	224460
AH2554P	NOK	224460
AH2554P0	NOK	224460
AH2560F	NOK	224464
AH2560F0	NOK	44X62X8!
AH2564Y0	NOK	224465
AH2564Y0	NOK	44X65X10!
AH2651F	NOK	1012
AH2651F0	NOK	45X62X8!
AH2668I	NOK	710345
AH2668I0	NOK	710345
AH2668J0	NOK	710345
AH2668R	NOK	224560
AH2668R	NOK	45X68X7!
AH2668R0	NOK	224560
AH2668R0	NOK	45X68X7!
AH2668Y0	NOK	710345
AH2685F	NOK	224570
AH2685F	NOK	45X72X12!
AH2685F0	NOK	45X72X7!
AH2685G0	NOK	45X72X95
AH2691E	NOK	1979
AH2691E0	NOK	1979
AH2691E0	NOK	45X75X7!
AH2786E	NOK	224835
AH2786E	NOK	48X68X10!
AH2786E0	NOK	224835
AH2786E0	NOK	48X68X10!
AH2786F	NOK	224840
AH2786F0	NOK	224840
AH2788E	NOK	1994
AH2788E	NOK	48X70X9!
AH2788E0	NOK	1994
AH2788E0	NOK	48X70X9!
AH2788H0	NOK	712010
AH2791G	NOK	1994
AH2791G	NOK	48X70X9!
AH2791G0	NOK	1994
AH2791G0	NOK	48X70X9!
AH2791G1	NOK	710313
AH2837F0	NOK	710354
AH2847S	NOK	710420
AH2854F	NOK	710173
AH2854F0	NOK	50X70X8!
AH2854F0	NOK	50X70X9
AH2864G	NOK	225040
AH2864G0	NOK	225040
AH2864G0	NOK	50X72X8!
AH2921P	NOK	8316
AH2961E0	NOK	52X72X8!
AH3050Q	NOK	227020
AH3050Q	NOK	70X88X8!
AH3193F	NOK	226015
AH3193F0	NOK	226015
AH3221E	NOK	710390
AH3221E0	NOK	710390
AH3221G	NOK	710390
AH3221G0	NOK	710390
AH3222F0	NOK	60X82X12!
AH3222F0	NOK	712006
AH3222G0	NOK	712006
AH3222Q0	NOK	712006
AH3340E	NOK	710199
AH3502P0	NOK	1019
AH350500	NOK	70X88X12
AH3505Q0	NOK	227020
AH3505Q0	NOK	70X88X8!
AH3519S	NOK	227045
AH3560-F	NOK	227235
AH3560F0	NOK	227235
AH3560G0	NOK	227235
AH3560H0	NOK	227235
AH3560P	NOK	227235
AH3618-P0	NOK	227550
AH3618E	NOK	227550
AH3618E	NOK	75X100X12!
AH3618E0	NOK	227550
AH3618E0	NOK	75X100X12!
AH3618R0	NOK	227550
AH3724-F0	NOK	228005
AH3724G	NOK	228005
AH3724G0	NOK	228005
AH3724P0	NOK	228005
AH3730E	NOK	228009
AH3730E0	NOK	228009
AH3730E0	NOK	80X100X10!
AH3730H0	NOK	228009
AH3730J	NOK	228015
AH3732-F0	NOK	228015
AH3732E	NOK	228010
AH3732E0	NOK	228009
AH3732E0	NOK	80X100X10!
AH3732G0	NOK	228009
AH3732I0	NOK	228009
AH3732J0	NOK	228009
AH3732L0	NOK	228015
AH3732M0	NOK	228009
AH3732N	NOK	228009
AH3732N0	NOK	228009
AH3733Q	NOK	228010
AH3733Q0	NOK	228009
AH3733R0	NOK	228010
AH3733R0	NOK	80X100X10!
AH3734-E0	NOK	228010
AH3734-E0	NOK	80X100X10!
AH3744-Q0	NOK	228020
AH3744-Q0	NOK	80X105X14!
AH3744Q	NOK	228020
AH3786E	NOK	1945
AH3786E	NOK	228480
AH3786E0	NOK	82X105X13!
AH3932P1	NOK	90X115X12
AH583R	JOHND	**471344**
AH62279	JOHND	**471760**
AH62281	JOHND	8998
AH633R	JOHND	**418028**
AH633R	JOHND	455137!
AH6901E0	NOK	35X56X10!
AH6924	NOK	227410
AH6924F	NOK	227410
AH6924P	NOK	227410
AH6924Y	NOK	227410
AH6924Y0	NOK	227410
AH7036F0	NOK	221710
AH7049E	NOK	710051
AH7049E0	NOK	35X47X7!
AH7142F0	NOK	30X46X7!
AH7142F0	NOK	712001
AH7235E	NOK	222340
AH7235E0	NOK	222340
AH7288G	NOK	712020
AH7288H	NOK	712011
AH7288I	NOK	712011
AH7341E	NOK	710008
AH7342E0	NOK	710007
AH7343E0	NOK	710006
AH7344E	NOK	711553
AH75295	JOHND	310841
AH75296	JOHND	**471808**!
AH75485	JOHND	200929
AH7592E	NOK	2942
AH7592E0	NOK	2942
AH76193	JOHND	**473237**!
AH7622F0	NOK	**473573**
AH7689E	NOK	350609
AH7743E	NOK	222742
AH7886F	NOK	320583
AH7897E	NOK	450375!
AH7897E	NOK	6936S!
AH7897E	NOK	9845
AH7897E0	NOK	450375!
AH7897E0	NOK	6936S!
AH7897E0	NOK	9845
AH7953E	NOK	710271
AH8002E	NOK	332062
AH8002E0	NOK	332062
AH8002E1	NOK	332062
AH80324	JOHND	**473317**
AH8045E	NOK	2016
AH8045E	NOK	30X45X8!
AH8045E0	NOK	2016
AH8045E0	NOK	30X45X5!
AH8279E0	NOK	105X135X12
AH8291Q	NOK	712005
AH8291Q0	NOK	712005
AH8338E0	NOK	223235
AH8338P	NOK	223235
AH8338P	NOK	32X46X6!
AH8338P0	NOK	223235
AH8338P1	NOK	223235
AH8339P	NOK	1987
AH8378E0	NOK	223608
AH8490E	NOK	222655
AH8490E0	NOK	222655
AH8490E0	NOK	26X48X7!
AH8515E0	NOK	35X62X7!
AH8515F	NOK	223553
AH8515F	NOK	4901
AH8515F0	NOK	35X65X10!
AH8515F0	NOK	4901
AH8563E	NOK	8660S
AH8563E0	NOK	8660S
AH8587E0	NOK	3394
AH8655P	NOK	1038
AH8655P0	NOK	1038
AH8656E	NOK	1019
AH8656E0	NOK	1019
AH86595	JOHND	**473228**
AH86596	JOHND	**472185**!
AH8740F	NOK	223750
AH8740F0	NOK	223750
AH8740G	NOK	223750
AH8740G0	NOK	223750
AH8740H	NOK	223750
AH8740H0	NOK	223750
AH8811E0	NOK	35X62X7!
AH8811E0	NOK	4901
AH8846P	NOK	710060
AH8846P0	NOK	710060
AH8847P	NOK	224025
AH8888E	NOK	222330

! Industrial Size/Type * Minor Width Difference

Mfr. No.	Name	Zero Duplication or Recommended Industrial
AH8888P	*NOK*	222330
AH8888P0	*NOK*	222330
AH8942E	*NOK*	710053
AH90963	*JOHND*	200303*=
AH93892	*JOHND*	200942*
AHH001A0	*NOK*	25X38X7!
AHH026A	*NOK*	30X45X8!
AHH026A0	*NOK*	30X45X5!
AHH035A0	*NOK*	20X30X7
AHH050A0	*NOK*	225020
AHH050A0	*NOK*	50X68X8!
AHH052A	*NOK*	40X55X8!
AHH052A0	*NOK*	224020
AHH085-A0	*NOK*	227550
AHH085-A0	*NOK*	75X100X12!
AHH144A0	*NOK*	25X35X7!
AHH144A0	*NOK*	712007
AHH254-B0	*NOK*	228010
AHH254-B0	*NOK*	80X100X10!
AHH276-A0	*NOK*	228020
AHH276A	*NOK*	80X105X14!
AHH443A0	*NOK*	223831
AHH443A0	*NOK*	38X55X7!
AHH452A0	*NOK*	1990
AHH452A0	*NOK*	27X43X8!
AHH587-B0	*NOK*	221710
AHH587-BO	*NOK*	17X28X7
AJ1177A	*FORD*	**473228**
AJ1177A1	*FORD*	**473228**
AJ1177A2	*FORD*	**473228**
AJ1177A3	*FORD*	**473228**
AJ1177A4	*FORD*	**473228**
AJ1177D3	*FORD*	9568
AJ1177F	*FORD*	9568
AJ4676A	*FORD*	7044NA
AJX1942A	*MASSE*	**473464**!
AJX1942A	*MASSE*	**473464**
AK35937	*JOHND*	200118=
AK35937K	*JOHND*	200118=
AK36310	*JOHND*	200854
AK36310K	*JOHND*	200854
AK36652	*JOHND*	200122
AK36652K	*JOHND*	200122
AK37498	*JOHND*	**471413**
AL1395N	*JOHND*	312140
AL1794N	*JOHND*	**471344**
AL20027T	*JOHND*	**473010**!
AL20185T	*JOHND*	470059
AL20185T	*JOHND*	**470380**!
AL2020T	*JOHND*	**472144**!
AL2021T	*JOHND*	**473367**!
AL2021T	*JOHND*	**473367**
AL2094T	*JOHND*	**471192**
AL2095T	*JOHND*	**473229**
AL2122T	*JOHND*	**471763**
AL2123T	*JOHND*	**471821**!
AL2124T	*JOHND*	**472924**!
AL2172T	*JOHND*	**471763**
AL2257T	*JOHND*	**471224**!
AL2258T	*JOHND*	**470954**!
AL2426T	*JOHND*	**470712**
AL26537	*JOHND*	**471763**
AL2653T	*JOHND*	**471763**
AL2654T	*JOHND*	345146
AL4360	*CATER*	**455121**
ALK62850	*CONTI*	**471554**!
AM1091T	*JOHND*	**470334**!
AM1162T	*JOHND*	**450173**
AM1717T	*JOHND*	**472924**!
AM1842T	*JOHND*	470950!
AM1842T	*JOHND*	6241S
AM1977T	*JOHND*	**473231**
AM205	*FMC*	**415995**!
AM205	*LK-BT*	**415995**!
AM2133T	*JOHND*	**472164**!
AM220T	*JOHND*	345035
AM221	*MUSKE*	16210
AM222	*MUSKE*	16204
AM2231	*MUSKE*	16200
AM224	*MUSKE*	16201
AM2241	*MUSKE*	16201
AM225	*MUSKE*	16208
AM2258T	*JOHND*	**472287**!
AM227	*MUSKE*	16211
AM228	*MUSKE*	16202
AM2281	*MUSKE*	16212
AM2291	*MUSKE*	16203
AM230	*MUSKE*	16203
AM231	*MUSKE*	16206
AM232	*MUSKE*	16209
AM2446T	*JOHND*	**323138**!
AM253T	*JOHND*	**471192**
AM2553T	*JOHND*	340853
AM260T	*JOHND*	**473234**
AM263	*JOHND*	**470625**!
AM263T	*JOHND*	**470625**!
AM2684T	*JOHND*	**473179**!
AM268T	*JOHND*	**472924**!
AM2723T	*JOHND*	**410496**!
AM2732T	*JOHND*	**410496**!
AM2773T	*JOHND*	**472924**!
AM2775T	*JOHND*	**410496**!
AM3094	*JOHND*	712260
AM3094T	*JOHND*	712260
AM331	*MUSKE*	16250
AM332	*MUSKE*	16251
AM333	*MUSKE*	16252
AM334	*MUSKE*	16253
AM334G	*MUSKE*	16254
AM335	*MUSKE*	16255
AM337	*MUSKE*	16257
AM338	*MUSKE*	16258
AM339	*MUSKE*	16259
AM340	*MUSKE*	16260
AM341	*MUSKE*	16261
AM342	*MUSKE*	16262
AM343	*MUSKE*	16263
AM344	*MUSKE*	16264
AM345	*MUSKE*	16265
AM346	*MUSKE*	16266
AM3572T	*JOHND*	**472144**!
AM381T	*JOHND*	**471224**!
AM727T	*JOHND*	345035
AM878T	*JOHND*	**473445**
AM937T	*JOHND*	**410496**!
AM939T	*JOHND*	**410496**!
AM965	*FMC*	**471271**!
AM965	*LK-BT*	**471271**!
AMK772	*DENCO*	**471192**
AMX10783	*ALLCH*	**473473**
AMX11252	*ALLCH*	**471192**
AMX11852	*ALLCH*	**471192**
AMX12593	*ALLCH*	**472354**!
AMX1284	*ALLCH*	**416888**!
AMX1285	*ALLCH*	455375=
AMX13435	*ALLCH*	**473215**!
AMX13503	*ALLCH*	**473197**
AMX13916	*ALLCH*	**471255**!
AMX14034	*ALLCH*	**472185**!
AMX14036	*ALLCH*	**474274**
AMX14354	*ALLCH*	**472705**!
AMX14378	*ALLCH*	**473444**
AMX15842	*ALLCH*	**415995**!
AMX16237	*ALLCH*	**470354**
AMX16397	*ALLCH*	**471766**!
AMX19347	*ALLCH*	**470590**
AMX19959	*ALLCH*	**471570**!
AMX20069	*ALLCH*	**414268**!
AMX20099	*ALLCH*	240736
AMX20296	*ALLCH*	**472354**!
AMX20637	*ALLCH*	6759S
AMX20668	*ALLCH*	**472439**
AMX2146	*ALLCH*	**474272**!
AMX21859	*ALLCH*	340771
AMX2262	*ALLCH*	**471646**!
AMX2263	*ALLCH*	**471354**!
AMX22904	*ALLCH*	340724!
AMX23148	*ALLCH*	**472299**
AMX24126	*ALLCH*	**473463**
AMX24127	*ALLCH*	**473463**
AMX24130	*ALLCH*	**471570**!
AMX24131	*ALLCH*	**471192**
AMX24133	*ALLCH*	**411376**!
AMX24137	*ALLCH*	**417172**
AMX24138	*ALLCH*	470059
AMX24138	*ALLCH*	**470380**!
AMX25866	*ALLCH*	**450621**
AMX2642	*ALLCH*	**470605**!
AMX281151	*ALLCH*	**472164**!
AMX30832	*ALLCH*	**412861**
AMX30920	*ALLCH*	**471801**!
AMX31045	*ALLCH*	**473245**!
AMX33653	*ALLCH*	**415027**
AMX33653	*ALLCH*	**415027**!
AMX336532	*ALLCH*	**416125**!
AMX36553	*ALLCH*	**415234**!
AMX36817	*ALLCH*	**472144**!
AMX368171	*ALLCH*	**472144**!
AMX36818	*ALLCH*	470086
AMX368181	*ALLCH*	470086
AMX36842	*ALLCH*	**480630**!
AMX368421	*ALLCH*	**480630**!
AMX37257	*ALLCH*	**415234**!
AMX372571	*ALLCH*	**415234**!
AMX37590	*ALLCH*	**471504**!
AMX375901	*ALLCH*	**471504**!
AMX42646	*ALLCH*	**415449**!
AMX44599	*ALLCH*	**412920**!
AMX46121	*ALLCH*	**470774**!
AMX46446	*ALLCH*	**413247**!
AMX46837	*ALLCH*	**415027**
AMX46837	*ALLCH*	**415027**!
AMX50360	*ALLCH*	**472179**
AMX53664	*ALLCH*	**415371**
AMX71042	*JOHND*	**471747**!
AMX71043	*JOHND*	**471571**
AMX71043A	*JOHND*	**471647**
AMX71177	*JOHND*	**472287**!
AMX76410	*JOHND*	**451583**!
AMX76433	*JOHND*	**471224**!
AMX76655	*JOHND*	**471763**
AMX81974	*JOHND*	**471472**!
AN100904	*JOHND*	**472354**!
AN102006	*JOHND*	**472492**!
AN10535	*JOHND*	203008
AN10535	*JOHND*	204008
AN10535N	*JOHND*	204008
AN12151	*JOHND*	**473459**
AN12151N	*JOHND*	**473459**
AN12717	*JOHND*	**471831**!
AN12717N	*JOHND*	**471831**!
AN140226	*JOHND*	**471750**!
AN140227	*JOHND*	**472144**!
AN150038	*JOHND*	416556!
AN150038	*JOHND*	**472157**
AN152118	*JOHND*	**472826**!
AN161130	*JOHND*	200940*=
AN163876	*JOHND*	**472924**!
AN181409	*JOHND*	204029
AN181409	*JOHND*	204507!
AN181410	*JOHND*	204017
AN181411	*JOHND*	**471267**!
AN190473	*JOHND*	**450523**
AN190474	*JOHND*	715101
AN30647	*JOHND*	**450400**
AN31885	*JOHND*	**473016**!
AN32745N	*JOHND*	**473237**!
AN50308	*JOHND*	203007=
AN70684	*JOHND*	**350936**
AN70684N	*JOHND*	**350936**
AN71194N	*JOHND*	**350936**
AN71578N	*JOHND*	**470774**!
AP-1181	*AUPRO*	S-1181
AP-1183	*AUPRO*	S-1183
AP-1188	*AUPRO*	S-1188
AP-1196	*AUPRO*	S-1196
AP-1205N	*AUPRO*	S-1205N
AP-1213	*AUPRO*	S-1213N
AP-1217	*AUPRO*	S-1217
AP-1883	*AUPRO*	S-1883
AP-1884	*AUPRO*	S-1884
AP-1932	*AUPRO*	S-1932
AP-1948	*AUPRO*	S-1948
AP-1950	*AUPRO*	S-1950
AP-1953	*AUPRO*	S-1953
AP-1955	*AUPRO*	S-1955
AP-1956	*AUPRO*	S-1956
AP-1960	*AUPRO*	S-1960
AP-1962	*AUPRO*	S-1962
AP-1973	*AUPRO*	S-1973
AP-1984	*AUPRO*	S-1984
AP-1987	*AUPRO*	S-1987
AP-1992	*AUPRO*	S-1992
AP-1994	*AUPRO*	S-1994
AP-2002	*AUPRO*	S-2002
AP-2007	*AUPRO*	S-2007
AP-203013	*AUPRO*	S-203013
AP-203025	*AUPRO*	S-203025
AP-203029	*AUPRO*	S-203029
AP-204013	*AUPRO*	S-204013
AP-204017	*AUPRO*	S-204017
AP-204038	*AUPRO*	S-204038
AP-2043	*AUPRO*	S-2043
AP-2081	*AUPRO*	S-2081
AP-2146	*AUPRO*	S-2146
AP-223420	*AUPRO*	S-223420
AP-223542	*AUPRO*	S-223542
AP-223543	*AUPRO*	S-223543
AP-223605	*AUPRO*	S-223605
AP-223830	*AUPRO*	S-223830
AP-223840	*AUPRO*	S-223840
AP-224015	*AUPRO*	S-224015
AP-224026	*AUPRO*	S-224026
AP-224235	*AUPRO*	S-224235
AP-224772	*AUPRO*	S-224772
AP-224820	*AUPRO*	S-224820
AP-225020	*AUPRO*	S-225020
AP-225110	*AUPRO*	S-225110
AP-225225	*AUPRO*	S-225225
AP-225230	*AUPRO*	S-225230
AP-226285	*AUPRO*	S-226285
AP-2286	*AUPRO*	S-2286
AP-2506	*AUPRO*	S-2506
AP-2655	*AUPRO*	S-2655
AP-2658	*AUPRO*	S-2658
AP-2692	*AUPRO*	S-2692
AP-2955	*AUPRO*	S-2955
AP-3087	*AUPRO*	S-3087

! Industrial Size/Type * Minor Width Difference

= The U.S. customer service number is 877-4-TIMKEN. The Canadian customer service numbers are 800-565-4927 (English) and 800-565-0438 (French-Canadian).

Mfr. No.	Name	Zero Duplication or Recommended Industrial
AP-3173	*AUPRO*	S-3173
AP-3195	*AUPRO*	S-3195
AP-3214	*AUPRO*	S-3214
AP-3227	*AUPRO*	S-3227
AP-331107N	*AUPRO*	S-331107N
AP-331227H	*AUPRO*	S-331227H
AP-331228H	*AUPRO*	S-331228H
AP-334111	*AUPRO*	S-334111
AP-3357	*AUPRO*	S-3357
AP-3459	*AUPRO*	S-3459
AP-3543	*AUPRO*	S-3543
AP-3604	*AUPRO*	S-3604
AP-3622	*AUPRO*	S-3622
AP-3655	*AUPRO*	S-3655
AP-3677	*AUPRO*	S-3677
AP-3723	*AUPRO*	S-3723
AP-3743	*AUPRO*	S-3743
AP-3747	*AUPRO*	S-3747
AP-3771	*AUPRO*	S-3771
AP-3896	*AUPRO*	S-3896
AP-3946	*AUPRO*	S-3946
AP-4072	*AUPRO*	S-4072N
AP-4099	*AUPRO*	S-4099
AP-410308	*AUPRO*	S-410308
AP-412920	*AUPRO*	S-412920
AP-4131	*AUPRO*	S-4131
AP-413248	*AUPRO*	S-413248
AP-413470	*AUPRO*	S-413470
AP-4148	*AUPRO*	S-4148
AP-415009	*AUPRO*	S-415009
AP-415960	*AUPRO*	S-415960
AP-4160	*AUPRO*	S-4160
AP-416273	*AUPRO*	S-416273
AP-417158	*AUPRO*	S-417158
AP-4249	*AUPRO*	S-4249
AP-4250	*AUPRO*	S-4250
AP-4278	*AUPRO*	S-4278
AP-4370N	*AUPRO*	S-4370N
AP-442109	*AUPRO*	S-442109
AP-442251	*AUPRO*	S-442251
AP-442874	*AUPRO*	S-442874
AP-444116	*AUPRO*	S-444116
AP-455086	*AUPRO*	S-455086
AP-470331N	*AUPRO*	S-470331N
AP-470361	*AUPRO*	S-470361
AP-470460	*AUPRO*	S-470460
AP-471224	*AUPRO*	S-471224
AP-471271	*AUPRO*	S-471271
AP-471424	*AUPRO*	S-471424
AP-473468	*AUPRO*	S-473468
AP-473677	*AUPRO*	S-473677
AP-4739	*AUPRO*	S-4739
AP-4740	*AUPRO*	S-4740
AP-474134	*AUPRO*	S-474134
AP-4762N	*AUPRO*	S-4762N
AP-4795V	*AUPRO*	S-4795V
AP-4899	*AUPRO*	S-4899
AP-493291	*AUPRO*	S-493291
AP-493637	*AUPRO*	S-493637
AP-494117	*AUPRO*	S-494117
AP-494123	*AUPRO*	S-494123
AP-51098	*AUPRO*	S-51098
AP-5121	*AUPRO*	S-5121
AP-5131	*AUPRO*	S-5131
AP-5604	*AUPRO*	S-5604
AP-5697	*AUPRO*	S-5697
AP-5778	*AUPRO*	S-5778
AP-6358	*AUPRO*	S-6358
AP-6712NA	*AUPRO*	S-6712NA
AP-6815	*AUPRO*	S-6815
AP-6840S	*AUPRO*	S-6840S
AP-6954S	*AUPRO*	S-6954S
AP-7022S	*AUPRO*	S-7022S
AP-7038SA	*AUPRO*	S-7038SA
AP-7044NA	*AUPRO*	S-7044NA
AP-710005	*AUPRO*	S-710005
AP-710067	*AUPRO*	S-710067
AP-710072	*AUPRO*	S-710072
AP-710073	*AUPRO*	S-710073
AP-710091	*AUPRO*	S-710091
AP-710092	*AUPRO*	S-710092
AP-710096	*AUPRO*	S-710096
AP-710101	*AUPRO*	S-710101
AP-710105	*AUPRO*	S-710105
AP-710110	*AUPRO*	S-710110
AP-710166	*AUPRO*	S-710166
AP-710168	*AUPRO*	S-710168
AP-722108	*AUPRO*	S-722108
AP-722109	*AUPRO*	S-722109
AP-7300S	*AUPRO*	S-7300S
AP-7412S	*AUPRO*	S-7412S
AP-7687S	*AUPRO*	S-7687S
AP-7692S	*AUPRO*	S-7692S
AP-7781S	*AUPRO*	S-7781S
AP-7934S	*AUPRO*	S-7934S
AP-8121S	*AUPRO*	S-8121S
AP-8181NA	*AUPRO*	S-8181NA
AP-8312	*AUPRO*	S-8312
AP-8430S	*AUPRO*	S-8430S
AP-8460N	*AUPRO*	S-8460N
AP-8516N	*AUPRO*	S-8516N
AP-8594S	*AUPRO*	S-8594S
AP-8610	*AUPRO*	S-8610
AP-8611N	*AUPRO*	S-8611N
AP-8660S	*AUPRO*	S-8660S
AP-8695S	*AUPRO*	S-8695S
AP-8704S	*AUPRO*	S-8704S
AP-8705S	*AUPRO*	S-8705S
AP-8792S	*AUPRO*	S-8792S
AP-8835S	*AUPRO*	S-8835S
AP-8871	*AUPRO*	S-8871
AP-8974S	*AUPRO*	S-8974S
AP-9015S	*AUPRO*	S-9015S
AP-9150S	*AUPRO*	S-9150S
AP-9178S	*AUPRO*	S-9178S
AP-9316	*AUPRO*	S-9316
AP-9406S	*AUPRO*	S-9406S
AP-9449	*AUPRO*	S-9449
AP-9569S	*AUPRO*	S-9569S
AP-9613S	*AUPRO*	S-9613S
AP-9845	*AUPRO*	S-9845
AP-9864S	*AUPRO*	S-9864S
AP-9912	*AUPRO*	S-9912
AP0549E	*NOK*	**472705**!
AP0549E0	*NOK*	**472705**!
AP0786E	*NOK*	**471529**
AP0786E0	*NOK*	**471529**
AP0913E	*NOK*	**470954**!
AP0987E1	*NOK*	20X30X7
AP1003E	*NOK*	222028
AP1012	*AUPRO*	S-1012N
AP1116E0	*NOK*	22X32X7!
AP1126	*AUPRO*	S-1126
AP1174	*AUPRO*	S-1174
AP1177	*AUPRO*	S-1177
AP1178	*AUPRO*	S-1178
AP1180	*AUPRO*	S-1180
AP1181E	*NOK*	**471267**!
AP1181E0	*NOK*	**471267**!
AP1247F0	*NOK*	24X37X7
AP1295	*MINNM*	470059
AP1295	*MINNM*	**470380**!
AP1295	*WHITE*	470059
AP1295	*WHITE*	**470380**!
AP1295G0	*NOK*	25X35X7!
AP1430E	*NOK*	**471649**!
AP1636G	*NOK*	**474260**!
AP1636G0	*NOK*	**474260**!
AP1666K0	*NOK*	30X42X7!
AP18387	*JOHND*	**470774**!
AP18387H	*JOHND*	**470774**!
AP19068	*JOHND*	712270
AP19068H	*JOHND*	712270
AP19214H	*JOHND*	**417191**
AP19214H	*JOHND*	456585
AP19243	*JOHND*	**470334**!
AP19360H	*JOHND*	**470954**!
AP19509	*JOHND*	**471766**
AP19547	*JOHND*	**472560N**
AP20035H	*JOHND*	**471737**
AP20413	*JOHND*	**472354**!
AP21123	*JOHND*	**415995**!
AP22072	*DAVEY*	**473462**
AP22325	*JOHND*	340823
AP22520	*JOHND*	**473016**!
AP22619	*JOHND*	**254287**
AP23236	*JOHND*	40555
AP23236	*JOHND*	40555S!
AP24013	*JOHND*	**471795**
AP24021	*JOHND*	450165
AP24021	*JOHND*	**471801**!
AP24021H	*JOHND*	**471192**
AP24106H	*JOHND*	200600
AP24550	*JOHND*	**470590**
AP2492	*MINNM*	**471354**!
AP2492	*OLIVE*	**471354**!
AP26239	*JOHND*	**470590**
AP26381H	*JOHND*	**413246**
AP26382H	*JOHND*	**472012**
AP26383H	*JOHND*	**471760**
AP26405	*JOHND*	340771
AP2816	*OLIVE*	**473228**
AP2816	*WHITE*	**473228**!
AP3169	*OLIVE*	5976S
AP3653	*MINNM*	**474253**
AP3653	*WHITE*	473413
AP3654	*OLIVE*	**472258**
AP3654	*WHITE*	**472258**
AP6842E	*NOK*	**473448**
AP6842E0	*NOK*	**473448**
AP68930	*LUF*	**415196**!
AP72745	*LUF*	J1121
AP7430E	*NOK*	**480821**!
AP7430E0	*NOK*	**480821**!
AP7740E	*NOK*	471337
AP7861E	*NOK*	**471735**
AP7861E0	*NOK*	**471735**
AP7864E	*NOK*	**471570**!
AP7935F	*NOK*	**471538**
AP7935F0	*NOK*	**471538**
AP7937E	*NOK*	**471787**!
AP7937E0	*NOK*	**471787**!
AP8212F	*NOK*	**471192**
AP8212F0	*NOK*	**471192**
AP8214F	*NOK*	**471688**
AP8214F0	*NOK*	**471688**
AP8240E	*NOK*	8059S
AP8240E0	*NOK*	8059S
AP8785E	*NOK*	**481481**
AP8785E0	*NOK*	**481481**
AP8901E0	*NOK*	25X42X10
AP8901E0	*NOK*	25X42X8!
AP8916E	*NOK*	222450
APO1295	*OLIVE*	470059
APO1295	*OLIVE*	**470380**!
APO1296	*OLIVE*	**450593**!
APO1612	*OLIVE*	**473367**
APO1612	*OLIVE*	**473367**!
APO2492	*OLIVE*	**471354**!
APO2492	*WHITE*	**471354**!
AQ28293K	*JOHND*	6575S
AQ28293KA	*JOHND*	6575S
AQ28735	*JOHND*	**471870**!
AQX124666	*JOHND*	**471649**!
AQX20382	*JOHND*	**471646**!
AQX22853	*JOHND*	**415076**
AQX26585	*JOHND*	**471737**
AQX32982H	*JOHND*	340136
AQX35627	*JOHND*	**473225**!
AQX37171	*JOHND*	**471192**
AQX37375	*JOHND*	**473016**!
AQX38321	*JOHND*	**471684**!
AQX42643	*JOHND*	**471795**
AQX42844	*JOHND*	**473205**
AQX43411	*JOHND*	200600
AQX48731	*JOHND*	**470590**
AQX59960	*JOHND*	6513
AQX61812	*JOHND*	7230=
AQX62213	*JOHND*	203008
AQX68086	*JOHND*	**472234**
AQX68090	*JOHND*	**471192**
AQX70116	*JOHND*	240736
AQX70245	*JOHND*	240733
AQX76268	*JOHND*	340136
AR-55216	*JOHND*	**470380**!
AR-7708	*CUMMI*	5026
AR-98650	*JOHND*	**412473**!
AR0437E0	*NOK*	8792S
AR0587E	*NOK*	221510
AR0587E0	*NOK*	15X25X6!
AR0587E0	*NOK*	221510
AR0670E	*NOK*	16X24X7
AR0670E0	*NOK*	16X24X6
AR0785E	*NOK*	3667
AR0785E0	*NOK*	3667
AR0809E	*NOK*	1015N
AR0809E0	*NOK*	18X28X6
AR0809G	*NOK*	1015N
AR0888E0	*NOK*	240735
AR0893E0	*NOK*	240816
AR0897E	*NOK*	343185
AR0897E0	*NOK*	343185
AR0913E	*NOK*	**470954**
AR0913G0	*NOK*	**470954**!
AR100066	*JOHND*	486701
AR1012E1	*NOK*	20X35X7!
AR103873	*JOHND*	**471281**!
AR1168E0	*NOK*	240733
AR1201R	*JOHND*	320457
AR1314E2	*NOK*	25X40X7!
AR1335R	*JOHND*	**472560N**!
AR1399F0	*NOK*	240731
AR1418E	*NOK*	**471224**
AR1418E0	*NOK*	**471224**
AR1587R	*JOHND*	**450400**
AR1588F	*NOK*	340835
AR1592E	*NOK*	1037*
AR1593G0	*NOK*	1037
AR1774F0	*NOK*	340817
AR1818F0	*NOK*	240356
AR1995E	*NOK*	340853
AR1995E0	*NOK*	340853
AR1997E	*NOK*	**472354**!
AR1997E0	*NOK*	**472354**!
AR20077R	*JOHND*	**472258**!
AR2022E	*NOK*	323125
AR2022E	*NOK*	**450456**!
AR2266F0	*NOK*	**474276***

! Industrial Size/Type * Minor Width Difference

= The U.S. customer service number is 877-4-TIMKEN. The Canadian customer service numbers are 800-565-4927 (English) and 800-565-0438 (French-Canadian).

Mfr. No.	Name	Zero Duplication or Recommended Industrial
AR2268F0	NOK	240319
AR2269F0	NOK	240319
AR2575F	NOK	340400
AR2575F0	NOK	340400
AR2643H0	NOK	45X60X10!
AR26480	JOHND	200855
AR26480R	JOHND	200855
AR26482R	JOHND	**473459**=
AR26706	JOHND	**415991**
AR26939R	JOHND	**470898**
AR27446	JOHND	200948
AR27446R	JOHND	200948
AR27806	JOHND	7208S
AR28201R	JOHND	**417484**!
AR2908E	NOK	40401
AR2908E0	NOK	40401
AR2915E	NOK	40360S!
AR2915E0	NOK	40360S!
AR29326	JOHND	240735
AR29326R	JOHND	240735
AR31882R	JOHND	5666
AR3329E	NOK	40555
AR3329E	NOK	40555S!
AR3329E0	NOK	40555
AR3329E0	NOK	40555S!
AR389R	JOHND	**471570**!
AR39043	JOHND	**471442**!
AR39052	JOHND	**471224**!
AR39117	JOHND	**471652**
AR40687	JOHND	311189
AR40737	JOHND	**471271**!
AR41795	JOHND	**471504**
AR42005	JOHND	**415995**!
AR42005	JOHND	**415995**!
AR42330	JOHND	**455151**
AR44137	JOHND	**417563**
AR44138	JOHND	**416380**!
AR44949	JOHND	5666
AR44950	JOHND	5666
AR45399	JOHND	**415371**
AR45401	JOHND	**416339**
AR46102	JOHND	45031S
AR48946	JOHND	5666
AR49025	JOHND	450129
AR49025	JOHND	**472826**!
AR49025	JOHND	5666
AR49592	JOHND	200855
AR51561	JOHND	**412473**!
AR515N	JOHND	712270
AR52224	JOHND	**472258**!
AR52258	JOHND	**417563**
AR52259	JOHND	**416380**!
AR531	JOHND	**472287**!
AR531R	JOHND	**472287**!
AR56967	JOHND	**417210**!
AR56967	JOHND	486985=
AR58155	JOHND	**417254**
AR58512	JOHND	**455576**!
AR58716	JOHND	3492V
AR608R	JOHND	**471763**
AR618R	JOHND	**451583**!
AR62328	JOHND	**470954**!
AR64671	JOHND	**471231**!
AR66751	JOHND	**417621**!
AR66752	JOHND	**416888**!
AR67942	JOHND	**471272**=
AR6868E	NOK	**473237**!
AR6868E1	NOK	**473237**!
AR69354	JOHND	3275=
AR69355	JOHND	3203=
AR69584	JOHND	**471138**!
AR69776	JOHND	410965=
AR70406	JOHND	2119*=
AR7108E0	NOK	240151
AR71558	JOHND	**471271**!
AR72375	JOHND	204013
AR7241E	NOK	340823
AR7241E0	NOK	340823
AR7277E0	NOK	240731
AR7302E	NOK	46997S
AR7382E0	NOK	**472185**!
AR7383E	NOK	**472185**!
AR74485	JOHND	JX1141
AR74813	JOHND	**471271**!
AR78189	JOHND	**416865**!
AR78259	JOHND	**455330**!
AR7901E	NOK	**253099**
AR7901E0	NOK	**253099**
AR79581	JOHND	416327
AR8081E0	NOK	7399S!
AR84782	JOHND	**416476***=
AR84783	JOHND	5615*=
AR85311	JOHND	**416332**!
AR87199	JOHND	**416332**!
AR88797	JOHND	**417601***=
AR92893	JOHND	5625
AR92894	JOHND	5625
AR94262	JOHND	**417343**!
AR94610	JOHND	**472157**
AR94610	JOHND	**472157**!
AR963R	JOHND	40169S
AR98649	JOHND	**416332**!
AREX80020	JOHND	5976S
ARX99437	JOHND	**415021**
ARX99437A	JOHND	**415035**!
ARX99437A	JOHND	**415035**
AS44201	WGEAR	**473229**
AS4508945	GMC	7141=
AS4508EF-945	GMC	7141=
AS49838	C-P	**451583**!
AS7927	AVCO	**415458**!
AS96417	C-P	340817
ASF5726	AU-WS	**472636**!
ASF5727A	AU-WS	**415458**!
ASF5853	AU-WS	**417344**!
ASF5853A	AU-WS	**417344**!
ASF5979	AU-WS	**471689**
ASF5979A	AU-WS	**471689**
ASF6000	AU-WS	**473228**
ASF6000A	AU-WS	**473228**
ASF6001	AU-WS	**474274**
ASF7590A	AU-WS	**471766**
ASF8908	AU-WS	80313
ASF9155	B-L-H	**415449**!
AT10344T	JOHND	**472193**!
AT1106Z	OWS	**474276**!
AT11492T	JOHND	**472560N**!
AT11665T	JOHND	**481163**!
AT11676T	JOHND	**473517**!
AT11888	JOHND	**472287**!
AT11927	JOHND	6703S
AT11979T	JOHND	**473459**
AT119T	JOHND	**471766**!
AT12341T	JOHND	**472185**=
AT12427	JOHND	**410825**
AT12427T	JOHND	**410825**
AT12431	JOHND	**472185**=
AT12431T	JOHND	**472185**=
AT12520	JOHND	**471138**=
AT12540T	JOHND	**471138**!
AT12541	JOHND	**417316**!
AT12541T	JOHND	**417316**!
AT12542	JOHND	**473231**!
AT12542T	JOHND	**473231**
AT12557	JOHND	357302
AT12557	JOHND	**415991**
AT12820T	JOHND	**470954**!
AT12822T	JOHND	**471766**!
AT12888	JOHND	7014S
AT12889	JOHND	1049
AT12996	JOHND	**416292**=
AT13014	JOHND	41026S
AT13063	JOHND	**471466**
AT13063T	JOHND	**471466**
AT13077	JOHND	**254270**
AT13161	JOHND	**415263**
AT13161T	JOHND	**473237**!
AT13306T	JOHND	**471504**
AT1393	GR-DV	**415995**!
AT1393	GR-DV	**415995**!
AT13945	JOHND	**471737**
AT13945T	JOHND	**471737**
AT13956	JOHND	**415995**!
AT13956	JOHND	**415995**!
AT13956T	JOHND	**415995**!
AT13956T	JOHND	**415995**!
AT13960T	JOHND	**471272**!
AT13963	JOHND	**472439**
AT14199	JOHND	486544N=
AT14199T	JOHND	486544N=
AT14664	JOHND	**471765**!
AT14831	JOHND	**473214**
AT14831T	JOHND	**473214**!
AT14835T	JOHND	**416891**!
AT14841	JOHND	**471341**!
AT14841T	JOHND	**471341**!
AT14924T	JOHND	**472164**!
AT15561	JOHND	**323138**!
AT15790	JOHND	6863S!
AT16431	JOHND	**417344**!
AT16431T	JOHND	**417344**!
AT16887	JOHND	**415458**!
AT17325T	JOHND	**471413**!
AT18387	JOHND	**415458**!
AT18387T	JOHND	**415458**!
AT18508T	JOHND	**473203**
AT18555T	JOHND	**472164**!
AT195T	JOHND	345146
AT20702	JOHND	**471272**!
AT20703	JOHND	200133
AT21143T	JOHND	**473203**
AT21608	JOHND	**471272**
AT21693	JOHND	**411500**
AT21780	JOHND	**471652**
AT22639	JOHND	**471224**!
AT22964	JOHND	714750
AT22965	JOHND	**415138**!
AT25329	JOHND	43290S
AT25331	JOHND	**416664**!
AT25585	JOHND	**472446**
AT344T	JOHND	410059
AT344T	JOHND	**470380**!
AT34656	JOHND	**415995**!
AT34656	JOHND	**415995**!
AT353	MINNM	**472258**
AT36255	JOHND	**412920**!
AT36612	JOHND	**472397**!
AT38188	JOHND	**473313**!
AT39319	JOHND	455056
AT39525	JOHND	**410825**
AT40603	JOHND	**471984**
AT40731	JOHND	**415066**
AT43415	JOHND	**415995***=
AT43738	JOHND	**471692**=
AT43762	JOHND	477410=
AT44697	JOHND	**415483**
AT47901	JOHND	**415449**!
AT48313	JOHND	204017
AT48334	JOHND	**472924**!
AT49215	JOHND	**473474**
AT52447	JOHND	**472164**!
AT53802	JOHND	455056
AT54995	JOHND	392077*=
AT55472	JOHND	**417349**!
AT59652	JOHND	**471267**!
AT61250	JOHND	315364*=
AT6550A	GMC	**473459**
ATC7064	LEYLD	**470898**
ATN082	RFT	713041
ATN090	RFT	223014
ATN123	RFT	223035
ATN129	RFT	223535
ATN132	RFT	713047
ATN202	RFT	713152
ATN227	RFT	713120
ATN230	RFT	713013
ATN342	RFT	713098
ATN353	RFT	231402
ATN355	RFT	713105
ATN366	RFT	713110
ATN368	RFT	713112
ATN371	RFT	713068
ATN382	RFT	713014
ATN387	RFT	229006
ATN395	RFT	713102
ATN396	RFT	713149
ATN397	RFT	231404
ATN401	RFT	231250
ATN402	RFT	713121
ATN407	RFT	713080
ATN414	RFT	710384
ATN417	RFT	713108
ATN438	RFT	229005
ATN441	RFT	713137
ATN451	RFT	713147
ATN455	RFT	713094
ATN457	RFT	713144
ATN459	RFT	713092
ATN466	RFT	713145
ATN471	RFT	713107
ATN477	RFT	713125
ATP506	RFT	713027
ATP507	RFT	713028
ATP514	RFT	713039
ATP517	RFT	713087
ATP528	RFT	713114
ATP536	RFT	713150
ATP547	RFT	713117
ATP551	RFT	223275
ATP553	RFT	224025
ATP554	RFT	713118
ATP558	RFT	713154
ATP572	RFT	713119
ATP575	RFT	713051
ATP576	RFT	224220
ATP580	RFT	713122
ATP585	RFT	713055
ATP587	RFT	713060
ATP596	RFT	713065
ATP597	RFT	713020
ATP602	RFT	713126
ATP606	RFT	226480
ATP611	RFT	713131
ATP621	RFT	713133
ATP623	RFT	713085
ATP626	RFT	713077
ATP628	RFT	713136
ATP635	RFT	713088

! Industrial Size/Type * Minor Width Difference

= The U.S. customer service number is 877-4-TIMKEN. The Canadian customer service numbers are 800-565-4927 (English) and 800-565-0438 (French-Canadian).

Mfr. No.	Name	Zero Duplication or Recommended Industrial
ATP643	*RFT*	713089
ATP648	*RFT*	713101
ATP649	*RFT*	713109
ATP661	*RFT*	713129
ATP672	*RFT*	713008
ATP675	*RFT*	713116
ATP676	*RFT*	713005
ATP677	*RFT*	713037
ATP692	*RFT*	222510
ATP703	*RFT*	713021
ATP708	*RFT*	713139
ATP715	*RFT*	713019
ATP717	*RFT*	713032
ATP718	*RFT*	713048
ATP776	*RFT*	713056
ATP777	*RFT*	713061
ATP781	*RFT*	713082
ATP788	*RFT*	713130
ATP789	*RFT*	713156
ATP790	*RFT*	226480
ATP800	*RFT*	713141
ATP805	*RFT*	713099
ATP814	*RFT*	713011
ATP835	*RFT*	713042
ATP838	*RFT*	713006
ATP841	*RFT*	224025
ATP852	*RFT*	713016
ATP856	*RFT*	226480
ATP857	*RFT*	713096
ATP861	*RFT*	713072
ATP864	*RFT*	713081
ATP867	*RFT*	713075
ATP869	*RFT*	713143
ATP870	*RFT*	713090
ATP880	*RFT*	713004
ATP881	*RFT*	713146
ATP884	*RFT*	713124
ATP886	*RFT*	713038
ATP888	*RFT*	713009
ATP889	*RFT*	713104
ATPC258511AV	*Y-T*	**455253**
ATV901	*RFT*	713010
ATV903	*RFT*	713052
ATV911	*RFT*	713086
ATV916	*RFT*	713106
ATV930	*RFT*	713022
ATV950	*RFT*	713083
ATV952	*RFT*	713084
ATV960	*RFT*	713093
ATV961	*RFT*	713078
ATV992	*RFT*	713142
ATV993	*RFT*	713140
ATV997	*RFT*	713071
ATV998	*RFT*	713033
ATV999	*RFT*	713148
ATY10746	*JOHND*	**417316**!
ATY11170A	*JOHND*	**417316**!
ATY11172A	*JOHND*	**472287**!
ATY11173A	*JOHND*	**470625**!
ATY11174A	*JOHND*	**470712**!
ATY11176	*JOHND*	**450400**
ATY11176A	*JOHND*	**450400**
ATY11180	*JOHND*	**473215**!
ATY11345A	*JOHND*	240735
ATY11402A	*JOHND*	**470954**!
ATY11519A	*JOHND*	**473459**
ATY11738A	*JOHND*	**471737**
ATY12170A	*JOHND*	**471766**!
ATY12340A	*JOHND*	**254287**
ATY12340AA	*JOHND*	**254287**
ATY13960T	*JOHND*	**471272**!
ATY1535B	*JOHND*	**471766**!
ATY20047A	*JOHND*	**472164**!
ATY20176B	*JOHND*	**472164**!
ATY21425A	*JOHND*	**352541**
ATY21484A	*JOHND*	**472560N**!
ATY21524A	*JOHND*	**352541**
ATY22340A	*JOHND*	**470954**!
ATY22413A	*JOHND*	**471766**!
ATY22428B	*JOHND*	**473214**
ATY3502	*JOHND*	**473234**
ATY3534	*JOHND*	**470625**!
ATY3535A	*JOHND*	**472924**!
ATY3557A	*JOHND*	**471192**
ATY3558A	*JOHND*	**471224**!
ATY3737A	*JOHND*	**471570**!
ATY3915	*JOHND*	**473445**
ATY3917	*JOHND*	**410496**!
ATY4003	*JOHND*	**470334**!
ATY4841A	*JOHND*	345146
ATY5135B	*JOHND*	**471766**!
ATY513S	*JOHND*	**471766**!
ATY5219B	*JOHND*	**473231**
ATY5317	*JOHND*	**472924**!
ATY5503	*JOHND*	**472287**!
ATY6517A	*JOHND*	**471766**!
ATY6517F	*JOHND*	410059
ATY6517F	*JOHND*	**470380**!
ATY6563B	*JOHND*	**323138**!
ATY6577B	*JOHND*	340853
ATY7517A	*JOHND*	**471766**!
ATY9242A	*JOHND*	**471763**
ATY9243A	*JOHND*	470950!
ATY9243A	*JOHND*	6241S
ATY9244A	*JOHND*	**473231**
ATY9245A	*JOHND*	**472164**!
ATY9245B	*JOHND*	**472164**!
AU42507	*JOHND*	**472636**
AU43436	*JOHND*	392076*=
AU43766	*JOHND*	200870
AUC1AK9424	*WHITE*	**472572**!
AW10266	*JOHND*	**473460**
AW10327W	*JOHND*	**471795**
AW10433	*JOHND*	**450065**
AW10434	*JOHND*	40183S!
AW14092	*AU-WS*	**417316**!
AW194014	*AU-WS*	**415995**!
AW194066	*B-L-H*	**473450**
AW194198	*B-L-H*	**470954**!
AW194198	*CLARK*	**470954**!
AW194204	*B-L-H*	**416404**!
AW194204	*CLARK*	**416404**!
AW194218	*B-L-H*	**472492**!
AW194224	*B-L-H*	**471267**!
AW194234	*B-L-H*	**417349**
AW194250	*B-L-H*	**413247**!
AW194256	*B-L-H*	**415991**
AW194256	*B-L-H*	455146!
AW194294	*B-L-H*	**415035**
AW194294	*B-L-H*	**415035**!
AW194296	*B-L-H*	**417351**!
AW194314	*B-L-H*	**413469**!
AW194332	*B-L-H*	**471271**!
AW194336	*B-L-H*	**416919**
AW194338	*B-L-H*	**416956**
AW194354	*AU-WS*	**55301S**
AW194374	*B-L-H*	**480210**!
AW194380	*B-L-H*	**470625**!
AW194388	*B-L-H*	7208S
AW194408	*B-L-H*	**476470**
AW194408	*CLARK*	**476470**
AW194410	*B-L-H*	**471271**!
AW194410	*CLARK*	**471271**!
AW194411	*B-L-H*	**417621**!
AW194412	*B-L-H*	**415442**!
AW194412	*CLARK*	**415442**!
AW194414	*B-L-H*	415146!
AW194414	*B-L-H*	**415991**
AW194414	*CLARK*	415146!
AW194414	*CLARK*	**415991**
AW194415	*B-L-H*	**415138**!
AW194415	*CLARK*	**415138**!
AW194417	*B-L-H*	**471271**!
AW194417	*CLARK*	**471271**!
AW194418	*B-L-H*	**470625**!
AW194418	*CLARK*	**470625**!
AW194426	*B-L-H*	**416664**!
AW194426	*CLARK*	**415085**!
AW194430	*B-L-H*	**471138**!
AW194430	*CLARK*	**471138**!
AW194431	*B-L-H*	**417343**!
AW194431	*CLARK*	**417343**!
AW194434	*B-L-H*	**415995**!
AW194434	*CLARK*	**415995**!
AW194435	*B-L-H*	**473237**!
AW194435	*CLARK*	**473237**!
AW194436	*B-L-H*	**470954**!
AW194436	*CLARK*	**470954**!
AW194439	*B-L-H*	**472015**!
AW194439	*CLARK*	**472015**!
AW194440	*B-L-H*	**417349**
AW194440	*CLARK*	**417349**!
AW194441	*B-L-H*	**476470**!
AW194441	*B-L-H*	**476470**
AW194441	*CLARK*	**476470**
AW194442	*B-L-H*	**416664**!
AW194442	*CLARK*	**416664**!
AW194443	*B-L-H*	**417172**
AW194443	*CLARK*	**417172**
AW2732E	*NOK*	710191
AW2864E	*NOK*	225040
AW3003E0	*NOK*	710021
AW337787	*CHRYS*	710182
AW337788	*CHRYS*	710183
AX10474	*ALLCH*	**471391**!
AX10834	*ALLCH*	**416664**!
AX13068	*ALLCH*	**473441**
AX1805D-472	*ROCKW*	**455434**
AX1805E-473	*ROCKW*	**415035**
AX1805W-465	*ROCKW*	**415960**!
AX18583	*ALLCH*	**417349**
AX24100	*ALLCH*	J1086=
AX241001	*ALLCH*	J1118
AX25957	*ALLCH*	**417316**!
AX27019	*ALLCH*	**471224**!
AX2712601	*ALLCH*	**471442**!
AX317830	*ACDEL*	J1105
AX317830	*GMC*	J1105
AX411	*IH*	5836
AX510	*IH*	6358
AX57252	*ALLCH*	**476470**!
AX57252	*ALLCH*	**476470**
AX57280	*ALLCH*	**473197**
AX62651	*ALLCH*	**416292**
AX64701	*ALLCH*	**415937**!
AX66089	*JOHND*	**471554**!
AX72933	*ALLCH*	415213N
AX74574	*JOHND*	**471224**!
AX76253	*ALLCH*	415832
AX76560	*ALLCH*	**415627**
AX76728	*ALLCH*	**416921**!
AX81489	*ALLCH*	**473016**!
AX81708	*ALLCH*	**471424**!
AX81725	*ALLCH*	**417349**!
AX82405	*ALLCH*	**471763**
AX91827	*ALLCH*	**417278**
AX91998	*ALLCH*	**416664**!
AX9209	*GMC*	6358
AX92276	*ALLCH*	**450084**!
AXA0043	*FRUEH*	376590A
AXA0043-1	*FRUEH*	376590A
AXA3271	*GMC*	**471652**
AXA7317	*BENDI*	**471141**!
AXS115	*COC*	**410308**!
AXS126	*COC*	**471554**!
AXS188	*COC*	**471750**!
AXS268	*COC*	**415458**!
AXS269	*COC*	**415458**!
AXS270	*COC*	**472492**!
AXS33	*COC*	**471766**!
AXS34	*COC*	**471870**!
AZ1026A	*EATON*	**471554**!
AZ1787F	*NOK*	710068
AZ1787F0	*NOK*	710068
AZ2245E	*NOK*	223842
AZ2254G	*NOK*	710509
AZ3320H	*JOHND*	**471765**!
AZ41341	*JOHND*	125X150X12!
AZ6886E	*NOK*	5131
AZ6886E0	*NOK*	5131
AZ6919E	*NOK*	1952
AZ6919E0	*NOK*	1952
AZ7283E0	*NOK*	2300
AZ7595E	*NOK*	200371
AZ7595E0	*NOK*	200371
AZ8045E	*NOK*	2016
AZ8045E0	*NOK*	2016
AZ8415E0	*NOK*	5131
AZ8443E	*NOK*	2300
B-0010	*GRAM*	**471532**
B-1865	*KEWNE*	**450984**
B-DO301	*WAUKE*	**470088**
B-L317A	*BR-WN*	**473213**!
B006	*VIC*	HU012A
B007	*VIC*	HU013A
B05761	*PAARS*	**415058**
B059	*VIC*	H075
B100006CA	*SPG*	710043
B100165RE0	*SPG*	100165
B1003	*HUGKE*	**416339**
B1003	*HUGKE*	455031!
B100318RER	*SPG*	4614N
B100357VA8	*SPG*	100357
B100552VJ0	*SPG*	100552
B100713VAA8	*SPG*	100713V
B103254	*BENDI*	**472636**!
B1043	*HU-WR*	**471820**
B1065	*ACF*	**473462**
B1094	*OLIVE*	**471192**
B10P88H	*IH*	**416654**!
B1110A	*OLIVE*	**415991**
B1110A	*OLIVE*	455146!
B112306	*OLIVE*	470059
B112306	*OLIVE*	**470380**!
B1175	*FORD*	**416738**!
B1175	*FORD*	450096
B12424	*BUC-E*	**470954**
B12536X	*WHITE*	**411253**!
B12571	*CASE*	**455019**!
B12598X	*WHITE*	**415960**!
B126	*OLIVE*	**473467**!
B12912	*WHITE*	**415960**!
B1311	*HU-WR*	**473457**!
B13247B	*JOHND*	200371
B132703M	*GMC*	**473225**!
B132703T	*CASE*	415064
B132704A	*B-L-H*	**473458**!
B132704AA	*B-L-H*	**417485**

! Industrial Size/Type * Minor Width Difference

= The U.S. customer service number is 877-4-TIMKEN. The Canadian customer service numbers are 800-565-4927 (English) and 800-565-0438 (French-Canadian).

Mfr. No.	Name	Zero Duplication or Recommended Industrial
B132704AB	B-L-H	416921!
B132704AC	B-L-H	416654!
B132704AD	B-L-H	415995!
B132704AE	B-L-H	455019!
B132704AF	B-L-H	455020
B132704AG	B-L-H	415021
B132704AH	B-L-H	455022
B132704AK	B-L-H	415023
B132704AL	B-L-H	455024
B132704AM	B-L-H	415025
B132704B	B-L-H	450084!
B132704D	B-L-H	473462
B132704E	B-L-H	472924!
B132704E	CLARK	472924!
B132704F	B-L-H	470530!
B132704G	B-L-H	410102
B132704H	B-L-H	416738!
B132704H	B-L-H	450096
B132704K	B-L-H	413469!
B132704L	B-L-H	412943
B132704M	B-L-H	411253!
B132704N	B-L-H	410694!
B132704P	B-L-H	412119!
B132704Q	B-L-H	417073
B132704R	B-L-H	415001!
B132704S	B-L-H	415988
B132704T	B-L-H	415458!
B132704U	B-L-H	455008
B132704X	B-L-H	415960!
B13281	CASE	204013
B13281P	CASE	204013
B13307	WHITE	417537
B13307X	WHITE	417537
B13310	WHITE	417278
B13332	WHITE	416288!
B137	O-M	482309
B137A	JNSON	471648
B13819	CASE	5458$
B13876	JOHND	204029
B13876	JOHND	204507!
B13876B	JOHND	204029
B13876B	JOHND	204507!
B1424	ALLCH	416888!
B1443	OLIVE	415449!
B1451	CR-CF	472439
B1452	CR-CF	471137
B1458	ALLCH	471765!
B1459	ALLCH	473426
B1464	ALLCH	471466!
B1479	ALLCH	471652
B149A	BR-WN	473238
B150683K	CONTI	471413!
B1517	HU-WR	415458!
B1520	HU-WR	472572!
B152012EX	OLIVE	470059
B152012EX	OLIVE	470380!
B1524	ALLCH	451583!
B15300B	JOHND	200392
B16154P	CASE	415254
B16159	CASE	471413!
B16407	CASE	471787!
B166564	HEIL	370036A
B17547	WHITE	410496!
B17553	WHITE	415196!
B17579	WHITE	416167!
B17767	WHITE	415645!
B17767	WHITE	455104
B17909	US-EL	470712!
B18319	US-EL	412943
B18338A	US-EL	415988
B18378	WHITE	415995!
B18403	WHITE	412119!
B1AZ7052B	FORD	410059
B1AZ7052B	FORD	470380!
B203	ITM	330385!
B20374	WHITE	7208S
B20376	WHITE	5965
B20377	WHITE	455134!
B2054BGR	SPG	6358
B2082BGR	SPG	9128S
B2082BX	SPG	2082
B2082BXR	SPG	9128S
B20B	FUNK	413247!
B21461	WGEAR	472560N!
B21479	WHITE	412920!
B2155BJ	SPG	2155
B2155BJR	SPG	5089
B23003	BOSTN	340771
B23377	WHITE	455022
B23525	WHITE	415960!
B23915	WHITE	412119
B2424	TMTR	471413
B24269	WHITE	411253!
B25212	VIC	13069
B256	OLIVE	470334!
B256A	OLIVE	471649!
B2756R	SPG	2756N=
B275A	OLIVE	474279N
B275B	OLIVE	50199S!
B275B	OLIVE	6863S!
B2TZ1175A	FORD	415960
B302	NATL	B300
B302	WMG	B300
B307	ALLCH	472439
B309	ALLCH	471442!
B313	HYST	473449!
B31311	JOHND	200392
B31312	JOHND	200371
B32038	WHITE	411253!
B32039	WHITE	455280
B32040	WHITE	415960!
B32041	WHITE	416288!
B32042	WHITE	417082
B32043	WHITE	417485
B32044	WHITE	410496!
B32045	WHITE	415995!
B32046	WHITE	412119!
B320475	SPG	44X62X8!
B32073	WHITE	412119!
B32076	WHITE	412119!
B3250	WHITE	415960!
B3250617	IH	472560N!
B3267	WAUKE	450033
B3271	WAUKE	471554!
B3281	WAUKE	476838!
B339R	JOHND	411253!
B3459RFR	SPG	3459
B3693M	AT IM	352541
B370001BG	SPG	370001A
B370002BG	SPG	370002A
B370003BG	SPG	370003A
B370004BG	SPG	370004A
B370005BG	SPG	370005A
B370006BG	SPG	370006A
B370007BG	SPG	370007A
B370008BG	SPG	370008A
B370008BG1	SPG	370008A
B370009BG	SPG	417506
B370010BG	SPG	417134
B370011BG	SPG	370011A
B370012BG	SPG	370012A
B370014BG	SPG	417172
B370015BG	SPG	370015A
B370018BG	SPG	418028
B370019BG	SPG	370019A
B370020BG	SPG	370020A
B370022BG	SPG	416892
B370023BG	SPG	370023A
B370024BG	SPG	417505
B370025BG	SPG	416158
B370026BG	SPG	370026A
B370027BG	SPG	370027A
B370028BG	SPG	416865
B370029BG	SPG	370029A
B370030BG	SPG	370030A
B370031BG	SPG	415058
B370033BG	SPG	370033A
B370034BG	SPG	370034A
B370036BG	SPG	370036A
B370037BG	SPG	370037A
B370043BG	SPG	370043A
B370046BG	SPG	370046A
B370047BG	SPG	370047A
B370048BG	SPG	370048A
B370051BG	SPG	370051A
B370054BG	SPG	370054A
B370057BG	SPG	370057A
B370063BG	SPG	416865
B370064BGR	SPG	370064A
B370065BG	SPG	370065A
B370066BG	SPG	417507
B370069BG	SPG	370069A
B370078BGR	SPG	370078A
B370086BG	SPG	370086A
B370094BG	SPG	370094A
B370106BG	SPG	370106A
B370107BG	SPG	370107A
B370109BGR	SPG	370109A
B370119BGR	SPG	370119A
B370120BG	SPG	370120A
B370121BG	SPG	370121A
B370124BG	SPG	370124A
B370131BG	SPG	370131A
B370132BG	SPG	370132A
B370145BG	SPG	370145A
B370150BG	SPG	370150A
B370165BG	SPG	415958
B370166BGR	SPG	370166A
B370195VG	SPG	370195A
B370199V	SPG	370199A
B370199VG0	SPG	370199A
B370199VR	SPG	370199A
B370211V	SPG	370211A
B370212V	SPG	370212A
B370215VX	SPG	417544
B370338BG	SPG	370338A%
B370349BG	SPG	370349A%
B370352BG	SPG	370352A
B376590BG	SPG	376590A%
B3830	ALLCH	416888!
B3857	WAUKE	470530!
B3945RAR	SPG	3945
B396	F-R-H	415645!
B396	F-R-H	455104
B397	F-R-H	415036
B399R	JOHND	411253!
B3AZ3B592A	FORD	470954
B3TZ7A011A	FORD	410308!
B4142	WAUKE	471549!
B4150RFR	SPG	4150N
B4150RFR	SPG	710096
B41511P	MID-R	473016!
B4243VGR	SPG	713750
B4245A1	FORD	450044
B4245A2	FORD	450044
B430	ITM	1097N
B4434VDO	SPG	4434V
B4525VAO	SPG	4525V
B453106	CONCA	415128
B4551	WAUKE	473215!
B45558	VIC	13338
B45684	VIC	35327
B4569VJ	SPG	714569
B45856	VIC	TCS45868
B4613R	SPG	4613N
B4613RER	SPG	4613N
B4613RXR	SPG	4613N
B4614R	SPG	4614N
B4614RER	SPG	4614N
B4675VD8	SPG	714675
B4679RFR	SPG	714679
B4725	WAUKE	450593!
B4729	ALLCH	415449!
B4738RFR	SPG	4738N
B4832CAR	SPG	472572
B4857VJ8	SPG	4857
B490	ACF	40468
B4939	ALLCH	470898!
B4A6348A	FORD	5479$
B4A6701A	FORD	5479$
B4AZ6336B	FORD	5479$
B4J1175A	FORD	415857!
B4Q1144A	FORD	5487$
B4Q1174A	FORD	5487$
B4Q1175B	FORD	455858
B4Q7288A	FORD	471267!
B4Q7918A	FORD	415449!
B4T1181A	FORD	5487$
B4T4676A	FORD	410737!
B4TZ1001A	FORD	5487$
B504	ALLCH	416888!
B510	HU-WR	470059
B510	HU-WR	470380!
B521	HU-WR	415116
B529116	B-L-H	415449!
B538	HU-WR	470086
B5502	WAUKE	471137
B572	HU-WR	470050
B58260	BENDI	410694!
B58693	KELSE	350936
B5A1190A	FORD	6815
B5A4676A	FORD	6808N
B5A7657A	FORD	7300S
B5A77288A	FORD	240816
B5A77362B	FORD	25598
B5A77837A	FORD	473459
B5AZ1190A	FORD	6815
B5AZ7052A	FORD	473234!
B5AZ7657A	FORD	7300S
B5AZ7A248A	FORD	473459
B5AZ7A294A	FORD	25598
B5D4676A	FORD	6808N
B5QH1190A	FORD	6638S
B5T7274A	FORD	6847S
B5T7274B	FORD	471267!
B5TZ4676A	FORD	6808N
B60305	BENDI	471442!
B6107	GEM	417267
B65468	BENDI	411253!
B66809	BENDI	472705!
B67315	BENDI	411253!
B67338	BENDI	470590
B683	MINNM	340771
B683	WHITE	340771
B693	HOUGH	472924!
B693	OLIVE	472924!
B6938	WAUKE	471570!
B6981	WAUKE	473444

! Industrial Size/Type % Spindle Mount $ F-M Number Is Part Of A Kit
= The U.S. customer service number is 877-4-TIMKEN. The Canadian customer service numbers are 800-565-4927 (English) and 800-565-0438 (French-Canadian).

Mfr. No.	Name	Zero Duplication or Recommended Industrial
B6982	WAUKE	**473367**!
B6982	WAUKE	**473367**
B6A3591A	FORD	240356
B6A4676A	FORD	5778
B6J1175A	FORD	**416297**
B6Q1174A	FORD	5487$
B6Q1175A	FORD	**455858**
B6Q3591A	FORD	7537S
B6QH1174A	FORD	6532S=
B6T1181A	FORD	5487$
B70436	CONCA	450165
B70436	CONCA	**471801**!
B71094	CONCA	**471750**!
B71454	CONCA	**472164**!
B71459	CONCA	**470625**!
B71460	CONCA	**471570**!
B76414	BENDI	**471730**
B77413	BENDI	**415991**
B77413	BENDI	455146!
B7785	WHITE	**416339**
B7785	WHITE	455031!
B7822	WAUKE	**471750**!
B792	HU-WR	**411253**!
B79211	BENDI	**471688**
B79699	BENDI	**470774**!
B7A1177A	FORD	**473228**
B7A1177B	FORD	9568
B7A1177B1	FORD	9568
B7A4676A	FORD	6930
B7A7047A	FORD	**471652**
B7A7047A	FORD	482208!
B7A77497A	FORD	421
B7AZ7A283A	FORD	**471652**
B7AZ7A283A	FORD	482208!
B7AZ7A283B	FORD	**471652**
B7AZ7A283B	FORD	482208!
B7C1190A	FORD	44053
B7T1190A	FORD	44052
B7T3591A	FORD	**471224**!
B7T7048A	FORD	**415988**
B7TZ1174A	FORD	6532S=
B7TZ1190A	FORD	6954S
B7TZ7A011A	FORD	**415988**
B7TZ7A248A	FORD	**412119**!
B7Y1190A	FORD	6954S
B80012	CONCA	**472924**!
B800409-011-060	FRUEH	**472164**!
B800409-011-061	FRUEH	**472164**!
B800409-011-062	FRUEH	**416339**
B800409-011-062	FRUEH	455031!
B800409011065	FRUEH	**415150**!
B80179AA	PARK	7639S
B82491	BENDI	**411500**
B826563	BENDI	**471413**
B83064	BENDI	**412473**!
B83542	BENDI	**476470**
B8423	WAUKE	473407
B85770	WHELA	**415449**!
B85771	WHELA	**416888**!
B85772	WHELA	**415138**!
B85773	WHELA	**416865**!
B85774	WHELA	**416107**!
B85774	WHELA	455073
B85775	WHELA	**416666**
B85776	WHELA	**415294**!
B85777	WHELA	**416364**!
B85779	WHELA	**417600**
B85782	WHELA	55239=
B85783	WHELA	**415482**
B85785	WHELA	**416654**!
B85786	WHELA	**417262**!
B85788	WHELA	455397
B85789	WHELA	**415551**
B866504	BENDI	**472354**!
B870	HU-WR	**473214**
B88372	BENDI	**473473**
B8851	WHITE	**415142**
B889864	BENDI	350909
B889864	BENDI	**471224**!
B8A12143A	FORD	13069
B8A4676A	FORD	6930
B8A4676B	FORD	7044NA
B8AZ6701A	FORD	5112
B8AZ6701A	FORD	5112S
B8E77497A	FORD	424
B8QH1175A	FORD	**415351**!
B8QH1175B	FORD	370004A
B8QH1190A	FORD	**416130**!
B8QH4676A	FORD	**416282**
B8QH4676B	FORD	**415458**!
B8QH4813A	FORD	**417484**!
B8QH6700A	FORD	**413246**
B8QH7288A	FORD	240733
B8QH7288B	FORD	**471570**!
B8QH7912A	FORD	**417316**!
B8QH7918A	FORD	**417316**!
B8QH7918B	FORD	**415449**!
B8TZ4676A	FORD	**415458**
B8TZ4676B	FORD	**415458**
B8TZ7052A	FORD	**417316**!
B8TZ7052B	FORD	**415449**!
B90145	CONCA	**471750**!
B90146	CONCA	**473467**!
B90668EX	OLIVE	**473228**
B96405	BENDI	**417485**
B9733005	MWKEL	**481537**
B9733006	KELSE	46997S
B9733008	KELSE	45187S
B9848	WHITE	**455280**
B985721	BENDI	**471413**
B985722	BENDI	**471264**
B98907	BENDI	**473458**!
B9A77837A	FORD	**331107N**
B9AP7A248A	FORD	**473459**
B9AZ3591A	FORD	240151
B9AZ7A248A	FORD	**473459**
B9C1190A	FORD	442380
B9C4224A	FORD	40769S
B9C7288B	FORD	**470954**
B9MZ3A718A	FORD	240151
B9QH12143A	FORD	427RR
B9QH4813A	FORD	**471271**!
B9T1181A	FORD	7154S
B9T4813A	FORD	100495
B9T4813A	FORD	**417349**
B9T6700A	FORD	**413246**
B9TE6700A	FORD	**350936**
B9TE6700A1	FORD	**350936**
B9TT3254A	FORD	40769S
B9TT4676A	FORD	**472016**
B9TT4813A	FORD	**470898**
B9TZ1190A	FORD	442380
B9TZ3254A	FORD	40769S
B9TZ4676A	FORD	**415483**
BA0475E	NOK	480491
BA0475E0	NOK	480491
BA1011	HU-WR	470950!
BA1011	HU-WR	6241S
BA1012	HU-WR	**471766**!
BA1350E0	NOK	452872=
BA1415E	NOK	**480581**
BA1415E0	NOK	**480581**
BA1607E	NOK	**415284**
BA1607E0	NOK	**415284**
BA2990E0	NOK	710092
BA3115E0	NOK	226610
BB0150E	NOK	**471705**!
BB0150E0	NOK	**471705**!
BB0504E	NOK	**416956**
BB0504E0	NOK	**416956**
BB0553X	NOK	455022
BB0553X0	NOK	455022
BB0562X	NOK	**456305**
BB0562X0	NOK	**456305**
BB0682X	NOK	**417518**
BB0682X0	NOK	**417518**
BB0897E	NOK	**455480**!
BB0897E0	NOK	**455480**!
BB0898E	NOK	**417562**
BB0898E0	NOK	**417562**
BB1021	HU-WR	**476470**
BB1022	HU-WR	**415991**
BB1022	HU-WR	455146!
BB1033	HU-WR	**450133**
BB1036E0	NOK	**476470**
BB1175C	FORD	5751
BB1175C	KELSE	5751
BB1185E0	NOK	**471267**!
BB1191E0	NOK	17X27X7
BB16277	DIA	**473228**!
BB1722	DIA	**473215**!
BB1730	DIA	**450593**!
BB1747	DIA	**471141**!
BB21723	DIA	**472409**!
BB22257	DIA	**417181**!
BB22274	DIA	**415991**
BB22274	DIA	455146!
BB23710	DIA	**471760**
BB23769	DIA	**471795**
BB26040	DIA	**410496**!
BB26249	DIA	**418028**
BB26249	DIA	455137!
BB27207	DIA	**473473**
BB29261	DIA	50075=
BB4686	FORD	**472287**!
BB51HE	TW-DI	**417354**!
BB5232	DIA	**415960**
BB6063	DIA	**415001**!
BB6210	DIA	**472164**!
BB6256	DIA	**415449**!
BB7830E	NOK	**417158**!
BB8463E0	NOK	**350435**
BBB307A0	NOK	334111
BBB560A0	NOK	20X31X7
BC0595E	NOK	**415027**!
BC0595E	NOK	**415027**
BC0595E0	NOK	**415027**
BC0595E0	NOK	**415027**!
BC1122E	NOK	223550
BC1122E0	NOK	35X58X10
BC1122F	NOK	223550
BC112E	NOK	223550
BC2078E	NOK	710110
BC2078F0	NOK	34X54X9
BC2185F	NOK	1209
BC3074E0	NOK	225230
BC3447E0	NOK	710265
BC3472E	NOK	35X58X10
BC3472E0	NOK	223550
BC3551E	NOK	225877
BC3776F0	NOK	25X62X10
BC4941E0	NOK	35X68X10!
BC4941E0	NOK	36X68X10
BC5936E	NOK	710522
BCC112A0	NOK	50X72X8!
BCC176A	NOK	40X62X8!
BCC176A0	NOK	40X62X12!
BCC261A0	NOK	70X110X10!
BCC300A0	NOK	45X60X10!
BCC458A0	NOK	75X95X10!
BD-3277-G	NOK	712938
BD0053E0	NOK	470706=
BD0380E	NOK	**473473**
BD0380E0	NOK	**473473**
BD1105E0	NOK	8597S
BD1295E0	NOK	7013S
BD1355F	NOK	**451845**
BD1380E0	NOK	**471652**
BD1593-RO	NOK	1884
BD1666E	NOK	5695
BD1694E	NOK	225220
BD1694E0	NOK	225220
BD1694F	NOK	1884
BD1695E	NOK	4899
BD1695E0	NOK	4899
BD1868E	NOK	5695
BD1868E0	NOK	5695
BD1962E	NOK	710411
BD2106E0	NOK	41X55X7!
BD2332E0	NOK	225650
BD2332E0	NOK	56X72X11.5!
BD2332G	NOK	710069
BD2349E0	NOK	1126
BD2357E	NOK	224400
BD2357E0	NOK	224400
BD2357F0	NOK	224045
BD2497G	NOK	710144
BD2497H	NOK	710186
BD2499E	NOK	710152
BD2499E0	NOK	710152
BD2564F0	NOK	1205
BD2564F0	NOK	1205N
BD2605E0	NOK	1971
BD2650F	NOK	710284
BD2716E	NOK	710142
BD2716E0	NOK	710142
BD2737	NOK	**1213N**
BD2737E	NOK	**1213N**
BD2737E0	NOK	40X54X6!
BD2766E	NOK	4899
BD2992E0	NOK	223554
BD2992E0	NOK	710419
BD2992F	NOK	223554
BD2992F	NOK	710419
BD3063E	NOK	712011
BD3063E0	NOK	712011
BD3063F	NOK	712011
BD3120E	NOK	1941
BD3123E0	NOK	1935
BD3126E0	NOK	1941
BD3127E0	NOK	1928
BD3196E0	NOK	48X65X10!
BD3236E0	NOK	225410
BD3277E	NOK	225673
BD3277F	NOK	225673
BD3277F0	NOK	225673
BD3277H0	NOK	225673
BD3291E0	NOK	1964
BD3291EO	NOK	1964
BD3298E	NOK	710151
BD3298E0	NOK	710151
BD3334E	NOK	4899
BD3408E0	NOK	48X78X8!
BD3423	NOK	60X75X8
BD3423E	NOK	710093
BD3423E0	NOK	710093
BD3467E	NOK	710150
BD3467E0	NOK	710150

! Industrial Size/Type $ F-M Number Is Part Of A Kit
= The U.S. customer service number is 877-4-TIMKEN. The Canadian customer service numbers are 800-565-4927 (English) and 800-565-0438 (French-Canadian).

Mfr. No.	Name	Zero Duplication or Recommended Industrial
BD3534E	*VIC*	4898
BD3537E	*NOK*	1993
BD3537E0	*NOK*	1993
BD3537F	*VIC*	225673
BD3543E	*NOK*	4898
BD3586E	*NOK*	710176
BD3665	*CASE*	**450456**!
BD3856E	*NOK*	224870
BD3856E0	*NOK*	224820
BD3856E0	*NOK*	224870
BD3945E	*NOK*	710108
BD3945E	*VIC*	710108
BD4007E	*NOK*	52X68X8
BD4007E0	*NOK*	710292
BD4020E	*NOK*	710108
BD4020E0	*NOK*	710108
BD4088E	*NOK*	710158
BD4198E0	*NOK*	2008
BD4198E0	*NOK*	32X54X10!
BD4221E	*NOK*	710183
BD4248E0	*NOK*	710251
BD4313E	*NOK*	710182
BD4320E0	*NOK*	710250
BD4326E	*NOK*	225775
BD4332E	*NOK*	710221
BD4332E0	*NOK*	710221
BD4334E	*NOK*	710412
BD4374E	*NOK*	710125
BD4376E	*NOK*	710127
BD4376E0	*NOK*	55X68X8!
BD4522E	*NOK*	710437
BD4534E0	*NOK*	710412
BD4618E	*NOK*	1188
BE-2582-F0	*NOK*	710296
BE0391F0	*NOK*	225872
BE1037E0	*NOK*	710090
BE1059E0	*NOK*	**473215**=
BE1192E	*NOK*	224874
BE1192E0	*NOK*	224874
BE1192G	*NOK*	224815
BE1192G0	*NOK*	224815
BE1391E0	*NOK*	**472705**!
BE1540E	*NOK*	239201
BE1540E0	*NOK*	239201
BE1540F0	*NOK*	4175
BE1593E0	*NOK*	1975
BE1623E	*NOK*	2443
BE1772E	*NOK*	222835
BE1772E	*NOK*	28X44X6!
BE1772E0	*NOK*	222835
BE2015E	*NOK*	224872
BE2015E0	*NOK*	224872
BE2015E0	*NOK*	48X72X7!
BE2305E	*NOK*	35X62X7!
BE2305E0	*NOK*	35X65X10!
BE2305F	*NOK*	34X62X10
BE2350E0	*NOK*	710118
BE2351E0	*NOK*	710124
BE2353E0	*NOK*	710122
BE2590E0	*NOK*	710123
BE2605E0	*NOK*	710098
BE2698E0	*NOK*	320564
BE2727E	*NOK*	225875
BE2727E0	*NOK*	58X75X11
BE3009E	*NOK*	710139
BE3021E0	*NOK*	710252
BE3025G	*NOK*	710121
BE3025G0	*NOK*	710121
BE3033E	*NOK*	710073
BE3040F	*NOK*	231052
BE3046E	*NOK*	231052
BE3046E0	*NOK*	231052
BE3046F	*NOK*	231052
BE3062E0	*NOK*	223840
BE3062E0	*NOK*	38X58X8!
BE3062G	*NOK*	223842
BE3146E	*NOK*	224026
BE3309E0	*NOK*	40X70X8
BE3310E	*NOK*	710112
BE3383E	*NOK*	224872
BE3383E0	*NOK*	48X72X7!
BE3683E	*NOK*	710143
BE3683E0	*NOK*	710143
BE3938F	*NOK*	223535
BE3938F0	*NOK*	223535
BE4016E	*NOK*	225535
BE4092E	*NOK*	710194
BE4092E0	*NOK*	50X68X8!
BE4160E	*NOK*	710132
BE4225E	*NOK*	223540
BE4344F	*NOK*	710208
BE4361E	*NOK*	710207
BE4506E	*NOK*	710299
BE4506E0	*NOK*	710299
BE4692E	*NOK*	710198
BE5260E0	*NOK*	225650
BEE008A0	*NOK*	60X75X8
BEE010A	*NOK*	75X110X10
BEE010A0	*NOK*	75X110X12
BEE020A0	*NOK*	45X60X10!
BEE102A	*NOK*	80X110X12
BEE102A0	*NOK*	80X110X10
BEE131A0	*NOK*	55X72X8!
BEE150A0	*NOK*	155X180X15
BEE166A0	*NOK*	35X72X10
BEE216A0	*NOK*	55X90X13
BEE409A0	*NOK*	18X30X7!
BEE642A0	*NOK*	35X56X10!
BF1060E	*NOK*	487945
BF1060E0	*NOK*	487945
BF1102E	*NOK*	494123
BF1102E0	*NOK*	494123
BF1102E0	*NOK*	51X63X8
BF1155E	*NOK*	710145
BF1155E0	*NOK*	710145
BF1161E	*NOK*	3677
BF1161E0	*NOK*	3677
BF1668E	*NOK*	710213
BF1773E	*NOK*	3667*
BF2291E0	*NOK*	710266
BF2526E0	*NOK*	80X115X12
BF2595E	*NOK*	224235
BF2595E0	*NOK*	42X58X7!
BF2596-EO	*NOK*	710323
BF2596E0	*NOK*	51X63X8
BF2986E	*NOK*	710161
BF3705E	*NOK*	710159
BF4717E	*NOK*	710300
BF4717E0	*NOK*	710300
BFF282A0	*NOK*	51X63X8
BG1233	*HU-WR*	**471224**
BG1583E	*NOK*	494117
BG1583F0	*NOK*	710097
BG2033E	*NOK*	1937
BG2033E0	*NOK*	1937
BG2034E	*NOK*	1936
BG2034E0	*NOK*	1936
BG2038E	*NOK*	710148
BG2038E0	*NOK*	710148
BG2039E0	*NOK*	224772
BG2039F0	*NOK*	224772
BG2257	*NOK*	37X52X8
BG2616E0	*NOK*	224254
BG2664E	*NOK*	473677
BG2664E0	*NOK*	40X55X8
BG2972E	*NOK*	1953
BG2972E0	*NOK*	42X60X7!
BG3657E	*NOK*	222310
BG3657E0	*NOK*	222310
BG3657E0	*NOK*	710254
BG3657E02X0	*NOK*	222310
BG3774E	*NOK*	710193
BG3988E	*NOK*	710226
BG3988E01	*NOK*	710226
BG4091E	*NOK*	710192
BG4091E0	*NOK*	710192
BG4678E	*NOK*	710301
BG4678E0	*NOK*	710301
BGG283A	*NOK*	45X72X7!
BGG283A0	*NOK*	45X72X12!
BGG283A0	*NOK*	45X72X95
BH-3937-E0	*NOK*	710442
BH-4373-F	*NOK*	710356
BH-4503-E0	*NOK*	710291
BH0253E	*NOK*	224066
BH0253E0	*NOK*	224066
BH0269E0	*NOK*	42X55X8!
BH0317E	*NOK*	710137
BH0354E	*NOK*	55X75X10
BH0354E0	*NOK*	225545
BH0605	*NOK*	90X110X13
BH0605E	*NOK*	229005
BH0605E0	*NOK*	229005
BH0605E0	*NOK*	229006
BH0605F	*NOK*	229005
BH0605F0	*NOK*	229005
BH0605G	*NOK*	229005
BH0605G0	*NOK*	229005
BH0605I	*NOK*	229005
BH0605I0	*NOK*	229006
BH0605J	*NOK*	229005
BH1030E	*NOK*	2043
BH1030E0	*NOK*	2043
BH1034E0	*NOK*	227610
BH1290E	*NOK*	2081
BH1290E1	*NOK*	2081
BH1430E0	*NOK*	223250
BH1430E0	*NOK*	710415
BH1431E0	*NOK*	223602
BH1438E	*NOK*	1021V
BH1438E0	*NOK*	1021V
BH1443E	*NOK*	48X75X10
BH1443E0	*NOK*	224979
BH1484E0	*NOK*	223340
BH1485E	*NOK*	228410
BH1485E0	*NOK*	228410
BH1485F	*NOK*	228410
BH1485F0	*NOK*	228410
BH1485G	*NOK*	228410
BH1485G0	*NOK*	228410
BH1485I0	*NOK*	228410
BH1581F0	*NOK*	36X50X7!
BH1673E0	*NOK*	28X44X6!
BH1742	*NOK*	70X92X12
BH1742E	*NOK*	227045
BH1742E0	*NOK*	227045
BH1742F	*NOK*	227045
BH1818E	*NOK*	710318
BH1818E0	*NOK*	710318
BH1882F	*NOK*	223602
BH1937E	*NOK*	710157
BH1937E0	*NOK*	27X43X8!
BH1937E0	*NOK*	710157
BH1941E0	*NOK*	710310
BH1941E1	*NOK*	32X47X7!
BH1952E	*NOK*	1036
BH1952E0	*NOK*	1036
BH1952F0	*NOK*	1146
BH1999E	*NOK*	223340
BH1999E0	*NOK*	223340
BH2006-E0	*NOK*	320595
BH2006G	*NOK*	320595
BH2006G0	*NOK*	320595
BH2051E0	*NOK*	40X58X10!
BH2077E	*NOK*	710109
BH2077E0	*NOK*	710109
BH2078	*NOK*	34X54X9
BH2078E	*NOK*	710110
BH2078E0	*NOK*	710110
BH2078F0	*NOK*	710110
BH2080G	*NOK*	710512
BH2118E	*NOK*	222830
BH2118E0	*NOK*	222830
BH2153E0	*NOK*	105X135X12
BH2153F	*NOK*	710349*
BH2153F0	*NOK*	710349*
BH2189	*NOK*	38X50X7!
BH2189E	*NOK*	223801!
BH2189E0	*NOK*	223801!
BH2190E	*NOK*	710111
BH2190E0	*NOK*	35X50X8!
BH2190E0	*NOK*	710111
BH2254E	*NOK*	38X54X7!
BH2254E0	*NOK*	239146
BH2254E0	*NOK*	38X54X10
BH2259E0	*NOK*	710332
BH2259F0	*NOK*	1121
BH2259G	*NOK*	710332
BH2259G0	*NOK*	710332
BH2259G1	*NOK*	710332
BH2264E	*NOK*	710233
BH2264E0	*NOK*	710233
BH2304E0	*NOK*	710334
BH2304F0	*NOK*	710334
BH2331E	*NOK*	710119
BH2348E	*NOK*	228700
BH2348E0	*NOK*	228700
BH2354E	*NOK*	224663
BH2370E	*NOK*	710138
BH2503E	*NOK*	2655
BH2503E0	*NOK*	2655
BH2506E	*NOK*	223220
BH2530E0	*NOK*	32X46X6!
BH2576E0	*NOK*	52X70X8!
BH2576E0	*NOK*	710187
BH2634E0	*NOK*	223831
BH2634E0	*NOK*	38X55X7!
BH2661E	*NOK*	223843
BH2737E	*NOK*	**1213N**
BH2737E0	*NOK*	40X54X6!
BH2737F	*NOK*	710444
BH2755E	*NOK*	228480
BH2820E	*NOK*	710446
BH2820E0	*NOK*	68X88X8!
BH2820E0	*NOK*	710446
BH2844E	*NOK*	223253
BH2844E0	*NOK*	223253
BH2845E	*NOK*	228250
BH2845E	*NOK*	710448
BH2845F	*NOK*	228250
BH2845F	*NOK*	710448
BH2845F0	*NOK*	228250
BH2845F0	*NOK*	710448
BH2851E	*NOK*	710247
BH2851E0	*NOK*	710247
BH2972E0	*NOK*	42X60X7!
BH3004E	*NOK*	224215
BH3004E0	*NOK*	224215

! Industrial Size/Type * Minor Width Difference

= The U.S. customer service number is 877-4-TIMKEN. The Canadian customer service numbers are 800-565-4927 (English) and 800-565-0438 (French-Canadian).

Mfr. No.	Name	Zero Duplication or Recommended Industrial
BH3004E0	*NOK*	42X58X7!
BH3007	*NOK*	38X53X8
BH3007F	*NOK*	1120
BH3007F0	*NOK*	1120
BH3009F0	*NOK*	38X58X8!
BH3019F	*NOK*	710421
BH3022E	*NOK*	710234
BH3022E0	*NOK*	710234
BH3037E	*NOK*	710248
BH3037E0	*NOK*	710248
BH3040E	*NOK*	710268
BH3041E0	*NOK*	220X260X15
BH3146E	*NOK*	224026
BH3146F	*NOK*	712551
BH3146H	*NOK*	710510
BH3152E	*NOK*	228008
BH3152E0	*NOK*	228008
BH3152G0	*NOK*	228008
BH3152H0	*NOK*	228008
BH3208E	*NOK*	710056
BH3208E0	*NOK*	710056
BH3208F	*NOK*	710056
BH3208F0	*NOK*	710056
BH3288F	*NOK*	46X60X8
BH3288F0	*NOK*	224660
BH3289E	*NOK*	1019
BH3289E0	*NOK*	1019
BH3289G	*NOK*	1019
BH3290E	*NOK*	1940
BH3290E0	*NOK*	1940
BH3310E	*NOK*	710112
BH3310E0	*NOK*	50X80X8
BH3340E	*NOK*	710199
BH3340E0	*NOK*	35X54X8!
BH3340E0	*NOK*	710199
BH3475E0	*NOK*	35X47X7!
BH3488E	*NOK*	224063
BH3488E0	*NOK*	224063
BH3526E0	*NOK*	1990
BH3615E0	*NOK*	223012
BH3670E	*NOK*	710114
BH3680E	*NOK*	710115
BH3687E0	*NOK*	224650
BH3757E	*NOK*	223420
BH3766F	*NOK*	710219
BH3766F0	*NOK*	710219
BH3845E0	*NOK*	43X55X8!
BH3845E0	*NOK*	710264
BH3854E0	*NOK*	710234
BH3882E	*NOK*	710236
BH3882F	*NOK*	710236
BH3966E	*NOK*	226510
BH3966E0	*NOK*	226510
BH3966HV	*NOK*	226510
BH4031E0	*NOK*	320583
BH4031E0	*NOK*	473677
BH4053E	*NOK*	710525
BH4089E	*NOK*	223802
BH4089E0	*NOK*	223802
BH4089E0	*NOK*	38X50X7!
BH4089F0	*NOK*	223802
BH4093E0	*NOK*	1989
BH4093F0	*NOK*	1989
BH4127E	*NOK*	710189
BH4214E	*NOK*	224840
BH4214E0	*NOK*	224840
BH4214E0	*NOK*	48X68X10!
BH4215E	*NOK*	710188
BH4215E0	*NOK*	710188
BH4270E0	*NOK*	42X58X7!
BH4270F	*NOK*	710517
BH4273E0	*NOK*	52X72X8!
BH4293E	*NOK*	710173
BH4293F	*NOK*	710173
BH4294F	*NOK*	224025
BH4366E	*NOK*	710144
BH4371E	*NOK*	3771
BH4371E0	*NOK*	35X50X8!
BH4375	*NOK*	95X115X13
BH4375F0	*NOK*	95X115X12
BH4392F0	*NOK*	229210
BH4476E	*NOK*	710060
BH4503F	*NOK*	710298
BH4503F0	*NOK*	710298
BH4505E0	*NOK*	710260
BH4513E0	*NOK*	224663
BH4519E0	*NOK*	229005
BH4545E0	*NOK*	228010
BH4546E0	*NOK*	710140
BH4569E0	*NOK*	710238
BH4576E	*NOK*	1180
BH4592E0	*NOK*	223750
BH4638E	*NOK*	710189
BH4638E0	*NOK*	710189
BH4660E0	*NOK*	42X72X10!
BH4687A0	*NOK*	223018
BH4701E	*NOK*	2012
BH4701E0	*NOK*	2012
BH4718F0	*NOK*	710332
BH4746E	*NOK*	229004
BH4746E	*NOK*	229005
BH4790G	*NOK*	710526
BH5052E	*NOK*	710364
BH5052E0	*NOK*	710364
BH5149F	*NOK*	710363
BH5149F0	*NOK*	710363
BH5278EV	*NOK*	710520
BH5279F	*NOK*	710521
BHH001A0	*NOK*	32X47X7!
BHH013-A0	*NOK*	228009
BHH013-B0	*NOK*	228015
BHH013AO	*NOK*	80X100X10!
BHH518A0	*NOK*	228005
BHH547A0	*NOK*	36X52X7
BHH550-A0	*NOK*	223420
BHH556A	*NOK*	70X92X12
BHH556A0	*NOK*	227045
BHH687B0	*NOK*	30X46X7!
BHH814-A0	*NOK*	1038
BHH815-A0	*NOK*	222330
BHH816-A0	*NOK*	229006
BHH816-A0	*NOK*	90X110X13
BHH817-A0	*NOK*	320595
BHH819-A0	*NOK*	228700
BJ137A	*JNSON*	**481644**
BK15520	*MACK*	**481568**!
BK8	*C-R*	5690
BL146	*BR-WN*	**476838**!
BL156	*BR-WN*	**476838**!
BM1432A	*NATSU*	**416158**
BM1432B	*NATSU*	**455462**
BNO7204	*MASSE*	**450472**!
BO2056E0	*NOK*	710253
BOS731	*PAARS*	**415991**!
BOS731	*PAARS*	**415991**
BOS774	*PAARS*	**416706**!
BP-1471-E0	*NOK*	710303
BP10881	*JOHND*	**473415**
BP12606	*JOHND*	40183S!
BP1315E0	*NOK*	7412S
BP13166	*JOHND*	204038
BP13166E	*JOHND*	204002
BP13715E	*JOHND*	**415035**
BP13715E	*JOHND*	**415035**!
BP13829	*JOHND*	**473473**
BP13831	*JOHND*	**415035**!
BP13831	*JOHND*	**415035**
BP13831E	*JOHND*	**415035**!
BP13831E	*JOHND*	**415035**
BP1471E	*NOK*	710303
BP1481E	*NOK*	320603
BP1595E	*NOK*	710156
BP1908E0	*NOK*	31X44X8
BP2151E	*NOK*	710155
BP2175E0	*NOK*	18X32X8!
BP2285E	*NOK*	24X42X8
BP2285E0	*NOK*	24X42X10
BP2601	*AUTSP*	**473238**!
BP2715E0	*NOK*	115X145X15
BP2968E0	*NOK*	30X47X7!
BP3000E	*NOK*	24X42X8
BP3000E0	*NOK*	24X42X10
BP3024F0	*NOK*	26X38X5!
BP3379F0	*NOK*	22X35X7
BP3754E	*NOK*	221620
BP3881E	*NOK*	710153
BP4706E0	*NOK*	27X43X8!
BR1153E0	*NOK*	16X28X7!
BR1443E	*NOK*	224979
BR1443E0	*NOK*	224979
BR3149E	*NOK*	221607
BR3489E	*NOK*	221607
BS140	*CLEVI*	39807
BS140	*CLEVI*	39823
BS148	*CLEVI*	**415284**
BS148	*MCCOR*	BS14803
BS1500	*TRUST*	82003
BS1501	*TRUST*	82005
BS1505	*TRUST*	82011
BS1507	*TRUST*	82001
BS158	*MCCRL*	82017
BS160	*CLEVI*	39608
BS160	*CLEVI*	**415379**
BS160	*MCCOR*	**415379**!
BS161	*MCCOR*	2377
BS161	*MCCOR*	BS15868
BS161	*MCCRL*	82011
BS168	*MCCOR*	2901
BS168	*MCCRL*	82003
BS17	*MCCOR*	BS1280
BS174	*CLEVI*	5591
BS184	*MCCOR*	5073
BS184	*MCCRL*	82022
BS185	*MCCRL*	82024
BS186	*CLEVI*	5460
BS187	*MCCOR*	5092
BS188	*MCCOR*	5068
BS194	*MCCOR*	2902
BS194	*MCCRL*	82005
BS197	*MCCOR*	5092
BS202	*MCCRL*	82016
BS203	*MCCOR*	5650
BS209	*MCCRL*	82015
BS210	*MCCOR*	5072
BS214	*MCCOR*	5095
BS216	*MCCOR*	3698
BS217	*MCCOR*	5750
BS223	*CLEVI*	455956H
BS223	*MCCOR*	BS40116
BS225	*MCCOR*	3698
BS225	*MCCRL*	82012
BS229	*MCCOR*	712006
BS23	*MCCOR*	5585
BS233	*MCCOR*	710060
BS235	*MCCOR*	227235
BS236	*MCCOR*	228005
BS238	*MCCOR*	228020
BS239	*MCCOR*	228010
BS246	*MCCOR*	710056
BS247	*MCCOR*	3772
BS252	*CLEVI*	714750
BS253	*MCCOR*	BS40265
BS255	*MCCOR*	BS40381
BS257	*CLEVI*	39807
BS257	*CLEVI*	39807+99599
BS258	*MCCOR*	BS25035
BS261	*MCCOR*	3909
BS261	*MCCOR*	BS40380
BS261	*MCCRL*	82001
BS263	*MCCOR*	228005
BS267	*MCCOR*	BS16144
BS271	*MCCOR*	BS16192
BS276	*MCCOR*	BS40387
BS279	*MCCOR*	5433
BS283	*MCCOR*	BS40382
BS286	*CLEVI*	39958
BS286	*CLEVI*	5624
BS290	*MCCOR*	**473573**
BS290	*MCCRL*	82027
BS292	*MCCOR*	228410
BS293	*MCCOR*	**415379**!
BS301	*MCCOR*	5210
BS30136	*AIWDI*	82003
BS311	*MCCOR*	3698
BS312	*MCCOR*	4307V!
BS313	*MCCOR*	BS40396
BS314	*CLEVI*	3893V
BS314	*CLEVI*	39608
BS315	*MCCOR*	3698
BS315	*MCCOR*	BS40110
BS315	*MCCRL*	82012
BS317	*CLEVI*	39807
BS317	*CLEVI*	39807+99599
BS321	*MCCOR*	4359V
BS329	*MCCOR*	BS40449
BS334	*MCCOR*	17720
BS336	*MCCOR*	17746
BS337	*MCCOR*	17748
BS349	*MCCOR*	BS40617
BS352	*MCCOR*	BS40252
BS354	*CLEVI*	39805
BS359	*MCCOR*	BS40604
BS362	*MCCOR*	BS40578
BS374	*MCCOR*	BS40638
BS377	*MCCOR*	BS40598
BS382	*MCCOR*	BS40615
BS383	*MCCOR*	BS40667
BS392	*MCCOR*	BS40535
BS394	*MCCOR*	BS40583
BS397	*MCCOR*	BS40502
BS40042	*AIWDI*	82005
BS40380	*AIWDI*	82001
BS42	*MCCOR*	5414
BS42	*MCCOR*	BS5974
BS43	*MCCOR*	5596=
BS47	*MCCOR*	BS5155
BS51	*MCCOR*	5479
BS64	*MCCOR*	5585
BS66	*MCCOR*	5072
BS67	*MCCOR*	5072
BS7	*MCCOR*	5419
BS72	*MCCOR*	5092
BS75	*MCCOR*	5095
BS76	*MCCOR*	5576
BS78	*MCCOR*	5591
BS85	*MCCOR*	5337
BS86	*MCCOR*	5095
BS86	*MCCOR*	BS5048

! Industrial Size/Type

= The U.S. customer service number is 877-4-TIMKEN. The Canadian customer service numbers are 800-565-4927 (English) and 800-565-0438 (French-Canadian).

Mfr. No.	Name	Zero Duplication or Recommended Industrial
BS9	MCCOR	5585
BT1042	HU-WR	**415187**
BT1044	HU-WR	**415035**
BW2780E	NOK	225874
BW2929	MASSE	**473463**
BW2948	MASSE	**473463**
BW3681E	NOK	224150
BW3681E0	NOK	224150
BW3681E1	NOK	224150
BW3681E2	NOK	224150
BW3684E	NOK	710214
BW3691E	NOK	710246
BW3691E0	NOK	710246
BW3692E	NOK	710527
BW3694E	NOK	710528
BW4265E	NOK	710133
BX15940E	JOHND	204002
BX42145	JOHND	**410496**!
BY404493	LETN	**415442**!
BY404493	LETN	55442
BY440493	LK-BT	**415442**!
BY440493	LK-BT	55442
BZ1106E	NOK	5778
BZ1106E0	NOK	5778
BZ3441E	NOK	710107
BZ3441E0	NOK	710107
BZ4396E	NOK	710178
C-0500	GRAM	50266
C-ND1608A	FAIRB	351487
C01Q1190A	FORD	**416865**!
C01Q1190B	MARMO	**416865**!
C01Q19846A2	FORD	**472394**
C04	ATP	**473179**
C0DD1190A	FORD	7994S
C0DE6700A	FORD	**473237**
C0DE6700A3	FORD	**473237**
C0DE6701A	FORD	5095
C0DP7A248A	FORD	**331107N**
C0DP7A32	FORD	**473214**
C0DR1177A3	FORD	**451182**
C0DR3591A	FORD	240414
C0DR3591A3	FORD	240414
C0DR7052A	FORD	**473214**
C0DR7288A	FORD	7399S!
C0DR77047	FORD	**480210**!
C0DR7A283A	FORD	**480210**!
C0DW1177A	FORD	**451182**
C0DW1177A3	FORD	**451182**
C0DW1177A4	FORD	**451182**
C0DW4676A	FORD	7457N
C0DZ4676A	FORD	7457N
C0LR3591E	FORD	**471652**
C0LR3B699A	FORD	7738*=
C0MM7048A	FORD	**471504**
C0MW4676A	FORD	7044NA
C0NN1190B	FORD	**471870**!
C0NN1190C	FORD	200855
C0NN4115B	FORD	**417621**!
C0NN6700A	FORD	**350936**
C0NN6701A	FORD	**350936**
C0NN7048A	FORD	**471504***
C0NN7052A	FORD	**472258**!
C0NN7052A1	FORD	**472258**!
C0NNA734A	FORD	**412920**!
C0TT4813C	FORD	**417484**!
C0TT7B216A	FORD	**470954**
C0TZ4813A	FORD	**417484**!
C0TZ7288A	FORD	**470954**
C10068333	STEEL	240385
C10068334	STEEL	340853
C102467	SCHWI	**473211**!
C10260	CASE	**471466**!
C10274	AT SU	**471821**!
C102747	SCHWI	**473211**!
C10275	AT SU	**474265**
C104814	SCHWI	450129
C104814	SCHWI	**472826**!
C104815	SCHWI	**473367**
C104815	SCHWI	**473367**!
C105073	SCHWI	**471649**!
C105798	SCHWI	**472185**!
C107373	SCHWI	**473367**
C107373	SCHWI	**473367**!
C107592	SCHWI	**473016**!
C108187	SCHWI	**472572**!
C108189	SCHWI	**476838**!
C108190	SCHWI	**471705**!
C1087	OLIVE	**471820**
C108850	SCHWI	**471192**
C110460	SCHWI	**472012**
C110849	SCHWI	**473238**
C1110	OLIVE	**415995**!
C111089	SCHWI	**471787**!
C111576	SCHWI	**473016**!
C112594	SCHWI	**471689**!
C113841	SCHWI	**471224**!
C115	UNIT	**472397**!
C119	UNIT	**416339**
C119	UNIT	455031!
C12079	CASE	**470390**
C1251	LEROI	**472572**!
C12510	LEROI	**476838**!
C12511	LEROI	**471224**!
C12512	LEROI	**417205**!
C12517	LEROI	450033
C1252	LEROI	**411394**!
C12522	LEROI	**411253**!
C12525	LEROI	**473463**
C1253	LEROI	6283S
C1255	LEROI	**410102**
C12747	MID-R	**471413**
C132214	CUMMI	**471763**
C135111	SPICE	**417484**!
C13612	JOHND	**473473**
C13612C	JOHND	**473473**
C139854	SCHWI	**471688**=
C1401	CLARK	**415449**!
C1443	HOUGH	**415988**
C1443	OLIVE	**415988**
C1443A	OLIVE	**415960**!
C14872	JOHND	**472213**
C14873	JOHND	**471692**!
C149	UNIT	470059
C149	UNIT	**470380**!
C150811	SCHWI	**471567**!
C151	IRON	**411253**!
C152006EX	OLIVE	470059
C152006EX	OLIVE	**470380**!
C15265	JOHND	**416664**!
C16322	JOHND	**473237**!
C16323	JOHND	42352S
C16326	JOHND	**472258**!
C165	MID-R	**471750**!
C1700	MID-R	**471554**!
C17435	SCHWI	**450084**!
C175004	JEFF	**413478**
C17909	US-EL	**470712**!
C17914	US-EL	**472185**!
C18338	US-EL	**415988**
C19540	JOHND	**471854**!
C19728	JOHND	**471765**!
C1AA1177A	FORD	**473228**
C1AE6336A	FORD	5596=
C1AE6336B	FORD	5390$
C1AE6700A	FORD	**350936**
C1AE6700A1	FORD	**350936**
C1AE6700A2	FORD	**350936**
C1AE6700B	FORD	**350936**
C1AE6700B1	FORD	**350936**
C1AE6700B2	FORD	**350936**
C1AE6700B3	FORD	**350936**
C1AP-7052-B	FORD	7300S
C1AP7052A	FORD	7692S
C1AZ6A321C	FORD	5390
C1AZ7C098A	FORD	424
C1DD1190A	FORD	7994S
C1DR3591A3	FORD	240414
C1DW1177A	FORD	**484054**
C1DW1177A1	FORD	**484054**
C1DW1177A2	FORD	**484054**
C1DZ1177A	FORD	**484054**
C1DZ1190A	FORD	7994S
C1MZ7C098A	FORD	424
C1TT1190A	FORD	7780
C1TT1190B	FORD	**416273**!
C1TT3591D	FORD	**450400**
C1TT3591E	FORD	**450400**
C1TT3591F	FORD	**323138**!
C1TT3591G	FORD	**474278**
C1TT3591G	FORD	6859S
C1TT3591H	FORD	**474276**!
C1TT4373A	FORD	**416500**
C1TT4478A	FORD	**417484**!
C1TT4573A	FORD	**416500**
C1TT4676A	FORD	**415960**
C1TT4813A	FORD	**471271**!
C1TT4813B	FORD	**415995**!
C1TT4813C	FORD	**410308**!
C1TZ1190A	FORD	**416273**!
C1TZ3591A	FORD	**471224**!
C1TZ4676A	FORD	**415960**
C1UP7B498A	FORD	7929S
C1UU1190A	FORD	**472164**
C1UW1177	FORD	51322
C1UW1177A	FORD	51322
C1UW1177A3	FORD	51322
C1UW4676B	FORD	7457N
C1UW4676B1	FORD	7457N
C1UZ1190A	FORD	**472164**
C1UZ4676B	FORD	7457N
C1UZ4676C	FORD	7457N
C1VP7052A	FORD	**473473**
C1VP7B498A	FORD	7929S
C1VV1177A	FORD	**482253**
C1VV1177B	FORD	**482253**
C1VV1177C	FORD	**482253**
C1VV1190	FORD	**472164**
C1VV1190A	FORD	9150S
C20119	VIC	25598
C20322	VIC	35316
C20341	VIC	35094
C2208	MASSE	50081
C23584EX	OLIVE	**473228**
C24096	VIC	35316
C24173	VIC	35315
C24216	VIC	35507
C2583E	JOHND	**480821**!
C263	UNIT	**472185**!
C2AA3B592A	FORD	**470954**
C2AE6700A	FORD	**350936**
C2AE6700A1	FORD	**350936**
C2AE6700A2	FORD	**350936**
C2AE6700B	FORD	**350936**
C2AP7052A	FORD	7692S
C2AP7A248A	FORD	**331107N**
C2AP7A248A2	FORD	**331107N**
C2AP7A248B	FORD	**473459**
C2AW4676A3	FORD	7044NA
C2AZ3B592A	FORD	**470954**
C2AZ4676A	FORD	7044NA
C2AZ4676B	FORD	7044NA
C2AZ6700A	FORD	**350936**
C2AZ7052A	FORD	7692S
C2AZ7A248A	FORD	**331107N**
C2DA7288A	FORD	7399S!
C2DZ3591A	FORD	240414
C2DZ7288A	FORD	7399S!
C2DZ7A011A	FORD	**471651**
C2OE6701A	FORD	5095
C2OP7052B	FORD	7692S
C2OR3591A	FORD	240151
C2OW1177A	FORD	8168=
C2OW1177A2	FORD	8168=
C2OW3635	FORD	8168=
C2OW4676B	FORD	**472070**
C2OW4676C	FORD	**472070**
C2OW4676C3	FORD	**472070**
C2OZ1177A	FORD	8168=
C2OZ4676A	FORD	**472070**
C2OZ4676B	FORD	**472070**
C2OZ6701A	FORD	5095$
C2SZ3591A	FORD	**471413**!
C2SZ3591A	FORD	7412S
C2SZ3B592A	FORD	**470954**!
C2TA38007C	FORD	370007A
C2TA4813A	FORD	**417484**!
C2TR3591A	FORD	**472560N**
C2TS38007A	FORD	370007A
C2TS4A052A	FORD	370023A
C2TZ4813A	FORD	**417484**!
C2TZ7A011A	FORD	416426H=
C305208	GWI	**471224**!
C305232	SCHWI	**472354**!
C305233	SCHWI	240009
C30632	VIC	35292
C30727	VIC	35316
C30796	VIC	35315
C30982	VIC	35292
C31061	VIC	35508
C31090	VIC	35292
C31156	VIC	35011
C31156	VIC	35394
C3118	LEROI	**471764**!
C31197	VIC	35524
C31207	VIC	35162
C31227	VIC	35486
C31262	VIC	35402
C3127	LEROI	**474254**
C31273	VIC	35001
C31284	VIC	35361
C31301	VIC	35402
C31325	VIC	35342
C31348	VIC	35555
C31398	VIC	35261
C31421	VIC	35526
C31514	VIC	422
C319616	JEFF	**472924**!
C319618	JEFF	**415995**!
C35434301043	IH	**455080**
C3577	JOHND	**415027**
C3577	JOHND	**415027**!
C3577E	JOHND	**415027**
C3577E	JOHND	**415027**!
C390212	FORD	**470088**
C3939	JOHND	**323138**!
C3940E	JOHND	41461S
C3AE6700A	FORD	2942
C3AE6700A1	FORD	2942

! Industrial Size/Type * Minor Width Difference $ F-M Number Is Part Of A Kit
= The U.S. customer service number is 877-4-TIMKEN. The Canadian customer service numbers are 800-565-4927 (English) and 800-565-0438 (French-Canadian).

Mfr. No.	Name	Zero Duplication or Recommended Industrial
C3AZ3591A	FORD	**472560N**
C3AZ4676A	FORD	7044NA
C3AZ6700A	FORD	2942
C3AZ6700A	FORD	**350936**
C3AZ7052A	FORD	7300S
C3AZ7A248A	FORD	**473459**
C3OP7A248A1	FORD	**331107N**
C3OW1177B	FORD	9569S
C3SZ3591A	FORD	**471646**!
C3TA1175F	FORD	**417506**
C3TA1175FA	FORD	**417506**
C3TA1190A	FORD	7780
C3TA1190B	FORD	44052
C3TA1190D	FORD	6954S
C3TA4478A	FORD	**416654**
C3TA4676A	FORD	**417487**!
C3TA4676A	FORD	**417487**
C3TA4813A	FORD	**415995**!
C3TR7A283A	FORD	**472354**!
C3TS38007C	FORD	370001A
C3TS38007C	FORD	380001A
C3TS38007D	FORD	370001A
C3TS38007D	FORD	380001A
C3TS38007E	FORD	370007A
C3TS4A052E	FORD	370036A
C3TZ1190A	FORD	7780
C3TZ1190C	FORD	**417134**
C3TZ3591A	FORD	340413
C3TZ4478A	FORD	**416654**
C3TZ4478B	FORD	**417487**!
C3TZ4478B	FORD	**417487**
C3TZ4676A	FORD	**417487**!
C3TZ4676A	FORD	**417487**
C3TZ4676B	FORD	**416282**
C3TZ4813A	FORD	**415995**!
C3TZ7A248B	FORD	**472354**!
C3TZ7A283B	FORD	**472354**!
C3UA1190A	FORD	**472164**
C3UW4676A	FORD	7457N
C3VA4676A	FORD	6808N
C4008	JOHND	**474278**
C4110334	BRWNG	455592
C4123	GRAY	**472439**
C43147	PETTI	**472636**!
C45407	VIC	35094
C45551	VIC	35327
C459	UNIT	**415082**
C460	ITM	**472164**!
C463	ITM	**471192**
C4FR7A283A	FORD	7412S
C4OZ1177A	FORD	9569S
C4TA1190A	FORD	7866S
C4TA4676A	FORD	**415458**
C4TA4676B	FORD	**415458**=
C4TA7048A	FORD	**482163**!
C4TE6700A	FORD	**413246**
C4TE6700A1	FORD	**413246**
C4TR7052A1	FORD	410059
C4TR7052A1	FORD	**470380**!
C4TS38007B	FORD	370001A
C4TS38007B	FORD	380001A
C4TZ-7051A	FORD	**482163**!
C4TZ1190A	FORD	7866S
C4TZ4676A	FORD	**415458**
C4TZ6700A	FORD	**413246**
C4TZ7048A	FORD	**482163**!
C4TZ7052A	FORD	410059
C4TZ7052A	FORD	**470380**!
C4UP7052A	FORD	**470687**
C4UZ7052A	FORD	**470687**
C4VW4676B	FORD	6808N
C4VY4676A	FORD	6808N
C4VY4676C	FORD	6808N
C502	ITM	50402
C51	UNIT	**415458**!
C58	UNIT	**472397**!
C5AA1190A1	FORD	6815
C5AA1190A2	FORD	6815
C5AR3B592B2	FORD	**471538**
C5AR7A283A	FORD	**471652**
C5AR7A283A	FORD	482208!
C5AZ-3D526A	FORD	**471645**
C5AZ3B592B	FORD	**471538**
C5AZ3B592C	FORD	**471538**
C5AZ3D732A	FORD	PSK-1
C5AZ6701B	FORD	2377
C5AZ6701B	FORD	5278
C5AZ7052A	FORD	7412S
C5FR7A283A	FORD	**471413**!
C5NN-3C615B	FORD	**481163**
C5NN-77047-A	FORD	**472150**
C5NN-77086-A	FORD	712144
C5NN-7N097-A	FORD	342805
C5NN6700A	FORD	**413246**
C5NNA734A	FORD	**472018**
C5NNP709B	FORD	**473234**!
C5TA1175A	FORD	**410987**!
C5TA1190A	FORD	370179A
C5TA1190A	FORD	4148
C5TA1190A	FORD	**471424**!
C5TA1190C	FORD	4148
C5TA1190C	FORD	**471424**!
C5TA1190D	FORD	370179A!
C5TA1190D	FORD	9339S
C5TS38007D	FORD	370007A
C5TZ1190A	FORD	4148
C5TZ1190A	FORD	**471424**!
C5TZ1190D	FORD	370179A!
C5TZ1190D	FORD	9339S
C5TZ7052A	FORD	7412S
C5TZ7052B	FORD	**470380**!
C5ZA1190A	FORD	6815
C5ZZ1190A	FORD	6815
C610	ITM	**472164**!
C61070	C-P	**470774**!
C617	ITM	**470898**
C63382	C-P	**451583**!
C649	ITM	**472492**!
C69	STANT	25598
C693A	OLIVE	**413469**!
C6AE6B314A	FORD	JV1368=
C6AW4676A	FORD	7044NA
C6AZ1190A	FORD	9150S
C6DW1177D	FORD	9161
C6DZ1177A	FORD	9161
C6OW4676	FORD	**472070**
C6TZ1175B	FORD	**412119**!
C6TZ1181A	FORD	**472747**
C6TZ1190A	FORD	**472394**
C6TZ3171A	FORD	204005
C6TZ3254A	FORD	**471766**
C6TZ3254B	FORD	**472258**!
C6TZ3254C	FORD	5131
C6TZ3254D	FORD	**471766**!
C6TZ4676A	FORD	5778
C6TZ4676B	FORD	6808N
C6TZ7052A	FORD	410059
C6TZ7052A	FORD	**470380**!
C6TZ7052B	FORD	410059
C6TZ7288C	FORD	**471466**!
C6TZ7918A	FORD	415983N!
C6TZ7A283A	FORD	**415991**
C6TZ7B215A	FORD	**473229**
C6TZ7B215D	FORD	**470682**
C6UW4676A	FORD	7457N
C6VP7052A	FORD	**473473**
C6VW1177A	FORD	**482253**
C6VY1177A	FORD	**482253**
C6VY7052A	FORD	**473473**
C70Z-3591-A	FORD	**472560N**
C759	ITM	**471827**
C77115	C-P	40208
C777	ITM	**471195**!
C786	ITM	**470898**
C788	ITM	**472492**!
C79078	C-P	472951
C79078	C-P	**474252**
C7AW1177A	FORD	8660S
C7AW1177F	FORD	**473228**
C7AW1177H	FORD	8660S
C7AW1177J	FORD	**473228**
C7AW4676A	FORD	3604
C7AZ1177A	FORD	8660S
C7AZ4676A	FORD	3604
C7AZ7B498A	FORD	7929S
C7DW1177A	FORD	9161
C7DW1177B	FORD	9161
C7NN7048B	FORD	**473454**
C7OR3591A3	FORD	**472560N**
C7OW1177E	FORD	9569S
C7OW1177F	FORD	9363S
C7OW1177K	FORD	9569S
C7OW1177L	FORD	9569S
C7OZ1177A	FORD	9363S
C7OZ1177B	FORD	9569S
C7OZ3591A	FORD	**472560N**
C7TA1190B1	FORD	44053
C7TA1190B2	FORD	44053
C7TA1190D2	FORD	4148
C7TA1190D2	FORD	**471424**!
C7TS38007A	FORD	370001A
C7TS38007A	FORD	380001A
C7TW1177A	FORD	**473228**
C7TZ1175A	FORD	9864S
C7TZ1190B	FORD	44053
C7TZ1190C	FORD	6954S
C7TZ1190D	FORD	4148
C7TZ1190D	FORD	**471424**!
C7TZ7A283A	FORD	456744N
C7TZ7A283B	FORD	**415995**!
C7UW1177D	FORD	9568
C7UW1177F	FORD	51322
C7UW1177G	FORD	9568
C7VW1177A	FORD	**482253**
C86639	C-P	240151
C86640	C-P	**473211**!
C86643	C-P	6597S
C87265	C-P	**470954**!
C87466	C-P	240733
C87467	C-P	240716
C8878143	BENDI	**471785**!
C8AW4676A	FORD	7044NA
C8AZ1190A	FORD	6815
C8HA1173A	FORD	370019A
C8HA1173B	FORD	370019A
C8HA1173C	FORD	370021A
C8HA1173D	FORD	370021A
C8HA1175A	FORD	370019A
C8HA1175B	FORD	370019A
C8HA1175C	FORD	370021A
C8HA1175D	FORD	370021A
C8HZ1175A	FORD	370019A
C8HZ1175B	FORD	370021A
C8HZ4674A	FORD	712937
C8JJ6701A	FORD	**415138**!
C8OW4676A	FORD	**472070**=
C8T24676B	FORD	**413246**
C8T27048A	FORD	**472164**!
C8TA1173C	FORD	370047A
C8TA1173D	FORD	370047A
C8TA1173G	FORD	370023A
C8TA1173H	FORD	370023A
C8TA1175A	FORD	**417353**=
C8TA1175B	FORD	**417353**=
C8TA1175C	FORD	9584
C8TA1175D	FORD	9584
C8TA1175F	FORD	370008A
C8TA1175G	FORD	370023A
C8TA1175H	FORD	370023A
C8TZ1175A	FORD	**417353**=
C8TZ1175B	FORD	9584
C8TZ1175C	FORD	370008A
C8TZ1175D	FORD	370023A
C8TZ1177A	FORD	**473228**!
C8TZ4676A	FORD	**416654**
C8TZ4676B	FORD	**413246**
C8TZ7048A	FORD	**472164**!
C8TZ7918A	FORD	**415991**
C8TZ7918A	FORD	**415991**!
C8UW1177A	FORD	9568
C900	ITM	**474274**
C90Z6701A	FORD	5095
C920713	KOEH	**471498**
C920732	KOEH	**471760**
C9526	WHITE	**415023**
C9AE6701B	FORD	5116
C9AR7A283A	FORD	**471652**
C9AR7A283A	FORD	482208!
C9AR7A283AA	FORD	3638
C9AZ-7A283A	FORD	3638
C9AZ1177A	FORD	**473228**
C9AZ6701A	FORD	5118
C9AZ6701B	FORD	5116
C9DZ1177A	FORD	9161
C9HA1175A	FORD	370019A
C9HA1175B	FORD	370019A
C9HA1175C	FORD	370021A
C9HA1175D	FORD	370021A
C9HA1190A	FORD	370054A
C9HA1190B	FORD	370057A
C9HS1131A	FORD	HU036A
C9HS1131B	FORD	HU110A
C9HS1131C	FORD	HU110A
C9HZ1175A	FORD	370019A
C9HZ1175B	FORD	370021A
C9HZ1190A	FORD	2674
C9HZ1190A	FORD	370054A
C9HZ1190B	FORD	370057A
C9NN4N109A	FORD	**415449**
C9NN7N838A	FORD	**415458**
C9NN7N839A	FORD	**473227**=
C9OZ6701A	FORD	5095
C9TA1175A	FORD	4250
C9TA1175B	FORD	4250
C9TA1175B1	FORD	4250
C9TA1175B2	FORD	4250
C9TA1175B3	FORD	4250
C9TA1175C2	FORD	9864S
C9TA1175E	FORD	**417353**=
C9TA1175F	FORD	**417353**=
C9TA1175G	FORD	9584
C9TA1175H	FORD	9584
C9TA1175K	FORD	370008A
C9TA1175K	FORD	5076
C9TA1175L	FORD	370023A
C9TA1175M	FORD	370023A
C9TA1175M	FORD	5667$
C9TA1175R	FORD	**417506**

! Industrial Size/Type $ F-M Number Is Part Of A Kit
= The U.S. customer service number is 877-4-TIMKEN. The Canadian customer service numbers are 800-565-4927 (English) and 800-565-0438 (French-Canadian).

Mfr. No.	Name	Zero Duplication or Recommended Industrial
C9TAC1175A1	FORD	**416273**
C9TZ1175A	FORD	4250
C9TZ1175B	FORD	9864S
C9TZ1175B1	FORD	4250
C9TZ1175C	FORD	4250
C9TZ1190A	FORD	**416273**!
C9TZ4676A	FORD	9773
C9TZ7052A	FORD	**474276**
C9TZ7052B	FORD	100495
C9TZ7052B	FORD	**417349**
C9UZ1177A	FORD	9568
C9VY1177A	FORD	**482253**
C9ZZ6701A	FORD	5108
CA1056	CLARK	**471795**
CA1057	CLARK	**473228**
CA1129	CLARK	55155=
CA1130	CLARK	**471472**!
CA1131	CLARK	**471466**!
CA1239	HARRI	**417349**
CA1243	HARRI	**417563**
CA1245	HARRI	**412119**!
CA1311	HARRI	**473231**
CA1319	HARRI	**455019**!
CA1471	HARRI	**471267**!
CA1545	HARRI	**471466**!
CA1546	HARRI	**471835**!
CA20009	C-R	**471267**!
CAL1982	LEYLD	370003A
CATE6700A5	FORD	**413246**
CB1001159	FORSH	100X115X9
CB10014013	FORSH	100X140X13
CB10213013	FORSH	102X130X13
CB10247	FORSH	10X24X7
CB12815015	FORSH	128X150X15
CB13516012	FORSH	135X160X12
CB14307	FORSH	14X30X7
CB14518012	FORSH	145X180X12
CB14817015	FORSH	148X170X15
CB16018510	FORSH	160X185X10
CB16327	FORSH	16X32X7
CB18521013	FORSH	185X210X13
CB194010	FORSH	19X40X10
CB21024015	FORSH	210X240X15
CB21025015	FORSH	210X250X15
CB22377	FORSH	22X37X7
CB2237X7	FORSH	22X37X8
CB22457	FORSH	22X45X7
CB24377	FORSH	24X37X8
CB24378	FORSH	24X37X8
CB274210	FORSH	27X42X10
CB325510	FORSH	32X55X10
CB34528	FORSH	34X52X8
CB346210	FORSH	34X62X10!
CB355810	FORSH	35X58X10
CB36477	FORSH	36X47X7
CB36527	FORSH	36X52X7
CB365812	FORSH	36X58X12
CB36627	FORSH	36X62X7!
CB37528	FORSH	37X52X8
CB406812	FORSH	40X68X12
CB45587	FORSH	45X58X7!
CB528010	FORSH	52X80X10
CB536810	FORSH	53X68X10
CB56808	FORSH	56X80X8
CB6167	FORSH	6X16X7
CB638510	FORSH	63X85X10
CB7510513	FORSH	75X105X13
CB7511012	FORSH	75X110X12
CB759010	FORSH	75X90X10
CB78	FITZ	5092
CB8012013	FORSH	80X120X13
CB8210512	FORSH	82X105X12
CB8511513	FORSH	85X115X13
CB8811012	FORSH	88X110X12
CB9212013	FORSH	92X120X13
CB9227	FORSH	9X22X7
CB9511512	FORSH	95X115X12
CB9512512	FORSH	95X125X12
CB9812013	FORSH	98X120X13
CBS1	FITZ	5419
CBS18	FITZ	5585
CBS43	FITZ	5596=
CBS44	FITZ	5414
CBS56	FITZ	5479
CC11553	DIA	**412119**!
CC14018018	FORSH	140X180X18
CC149	FMC	**417562**
CC1553	DIA	**417344**!
CC19023013	FORSH	190X230X13
CC20Z4676B	FORD	**472070**
CC21512	WHITE	408
CC2AZ4676B	FORD	7044NA
CC61957	C-W	**471554**!
CC649013	FORSH	64X90X13
CC7AZ4676A	FORD	3604
CDTZ7052A	FORD	410059
CDTZ7052A	FORD	**470380**!
CE5311	DURA	**472705**!
CE7009	CLARK	710425
CE7011	CLARK	710562
CE7013	CLARK	710650
CE7016	CLARK	710800
CE7019	CLARK	710925
CE7021	CLARK	711000
CE7024	CLARK	711200
CE851733	CLARK	**471689**!
CEX11781	GMC	**411253**!
CEX2875	GMC	410059
CEX2875	GMC	**470380**!
CFS116	PETTI	415317
CG195	LK-BT	55333=
CL251	CLARK	**472179**
CLHX3AO	MARMO	**416888**!
CM19	FMC	**352541**
CM19	LK-BT	**352541**
CO24	ATP	3227
CO3	ATP	**472015**!
CO4	ATP	**473179**
CP12112	PERSN	204035
CP1211B	PERSN	204035
CP1556	PERSN	**474272**!
CP2113	DEMPC	**476838**!
CP2213	DEMPC	**473215**!
CP2214	DEMPC	470059
CP2214	DEMPC	**470380**!
CP2413	DEMPC	**471820**
CP2414	DEMPC	**473367**!
CP2414	DEMPC	**473367**
CP2613	DEMPC	**470088**
CP2614	DEMPC	**473464**!
CP2614	DEMPC	**473464**
CP6072A	FAIRB	**417533**
CP6072B	FAIRB	**416107**!
CP6072B	FAIRB	455073
CP6072C	FAIRB	**415150**!
CP6072D	FAIRB	**472157**!
CP6072D	FAIRB	**472157**
CP6072E	FAIRB	**416892**!
CP6072H	FAIRB	**415379**
CP6072H	FAIRB	**415379**!
CP6072J	FAIRB	**455191**
CP6072K	FAIRB	**416229**
CP6072L	FAIRB	**415551**
CP6072M	FAIRB	**417362**!
CP6072R	FAIRB	**417603**!
CP6072W	FAIRB	**416239**!
CP6072X	FAIRB	**415482**
CP6072Y	FAIRB	**417020**
CP6147A	FAIRB	**415991**
CP6147A	FAIRB	455146!
CP6147B	FAIRB	**416865**!
CP6147C	FAIRB	**416107**!
CP6147C	FAIRB	455073
CP6228A	FAIRB	**416364**!
CP813	DEMPC	**411253**!
CP814	DEMPC	**415458**!
CR1501	GOODM	**471224**!
CR15024	GOODM	**471567**!
CR17	FMC	**416149**
CR17	LK-BT	**416149**
CR1871	GOODM	**471733**
CR225112	GOODM	**473214**
CR5754	GOODM	**415041**
CR9815	FULLE	240731
CS7010	CLARK	710500
CSK792	SCHWI	**471271**=
CTCAA1175A	FORD	**415960**!
CTL-3A5038	MARMO	**412119**!
CTL-65037	MARMO	**415371**
CTL-65038	MARMO	**416921**!
CTL-65080	MARMO	**473444**
CTLS-4TA1761	MARMO	**416654**
CX11471E	JOHND	**450523**
CX3183E	JOHND	**450765**!
D00E6701A	FORD	5117
D00W4676B	FORD	**472070**
D00Z6701A	FORD	5117
D0A1190	FORD	40438S
D0AE6700A	FORD	**350936**
D0AE6700A2	FORD	**350936**
D0AE6700A2A	FORD	**350936**
D0AW4676C	FORD	3604
D0AW4676D	FORD	7044NA
D0AZ6700A	FORD	**350936**
D0AZ7A283A	FORD	**472354**!
D0HA1175E	FORD	370021A
D0HA1175F	FORD	**417506**
D0HA1190L	FORD	370008A
D0HM1190A	FORD	370054A
D0HZ1175A	FORD	370046A
D0HZ1175B	FORD	370047A
D0HZ1175C	FORD	**417506**
D0HZ1175D	FORD	370023A
D0HZ1175E	FORD	370019A
D0HZ1175F	FORD	370021A
D0HZ1190A	FORD	370054A
D0HZ1190B	FORD	370001A
D0HZ1190B	FORD	380001A
D0HZ1190C	FORD	370057A
D0HZ1190D	FORD	370008A
D0HZ1190E	FORD	370048A
D0HZ1190E	FORD	380048A
D0HZ1190F	FORD	370048A
D0HZ1190F	FORD	380048A
D0RY1190A	FORD	1192
D0RY4676A	FORD	2642
D0RY7052D	FORD	2551
D0RY7052E	FORD	1193
D0TA1190A	FORD	2222
D0TP7048A	FORD	**471271**!
D0TZ1175A	FORD	370046A
D0TZ1175A	FORD	5100
D0TZ1175B	FORD	5649
D0TZ1175C	FORD	370008A
D0TZ1175C	FORD	5076
D0TZ1175D	FORD	370023A
D0TZ1175D	FORD	5667
D0TZ1175E	FORD	**417506**
D0TZ1175E	FORD	5089$
D0TZ1177A	FORD	710067
D0TZ1190A	FORD	2222
D0TZ4676A	FORD	9316
D0TZ7A011A	FORD	**471271**!
D0UW4676A	FORD	7044NA
D10026	JOHND	203006!
D102210	GAL	416556!
D102210	GAL	**472157**
D102245	GAL	J1130
D10297	THEW	**415150**!
D10312	THEW	**415150**!
D1056	JOHND	450089
D105762	GAL	**476470**
D106339	GAL	**412861**
D106344	GAL	**471267**!
D10738	GMC	**473230**!
D107485	GAL	**416137**
D10779	GAL	**416339**
D10779	GAL	455031!
D109853	GAL	**471272**!
D10W1177A	FORD	9569S
D11076	GAL	**470380**!
D111	ROCKW	**416921**!
D111020	GAL	417547
D112926	GAL	**415072**
D113732	GAL	**415371**
D114247	GAL	**417555**!
D11467	GAL	**471255**!
D1150220	SPICE	**471795**
D1151300	SPICE	**472015**!
D1151300	VIC	**472015**!
D11519141	SPICE	**472164**!
D1153449	SPICE	**471766**!
D1153449	VIC	**473237**!
D1159141	SPICE	**472164**!
D121199	GAL	**416888**!
D122092	GAL	**473204**=
D12W1177A	FORD	2669
D12W1177B	FORD	2669
D130214	GAL	**417262**!
D1406	THEW	**472157**!
D1406	THEW	**472157**
D14090	GAL	**417269**!
D14134	GAL	**417356**!
D14134	GAL	455188
D14190	GAL	**415938**
D1443	OLIVE	**416339**
D1443	OLIVE	455031!
D154	MINNM	**415196**!
D155343	GAL	JV1124=
D15575	MALL	**471224**!
D15576	MALL	340413
D18438	GAL	**415072**
D19974	GAL	455963H=
D1AP7052AA	FORD	2465*
D1AP7052BA	FORD	7692S
D1AR3B592A3A	FORD	**471538**
D1AR7052A1A	FORD	410059
D1AR7052A1A	FORD	**470380**!
D1AR7052AA	FORD	7692S
D1AR7052B1A	FORD	9832=
D1AW1177C	FORD	**473228**
D1AW1177D	FORD	8660S
D1AW1177E	FORD	8660S
D1AZ1177A	FORD	8660S
D1AZ1177B	FORD	8660S
D1AZ7052A	FORD	7692S
D1DW1177A	FORD	9161
D1FZ1177A	FORD	2669

! Industrial Size/Type * Minor Width Difference $ F-M Number Is Part Of A Kit
= The U.S. customer service number is 877-4-TIMKEN. The Canadian customer service numbers are 800-565-4927 (English) and 800-565-0438 (French-Canadian).

Mfr. No.	Name	Zero Duplication or Recommended Industrial
D1FZ1177B	FORD	2669
D1FZ6700A	FORD	2012V
D1FZ6700B	FORD	3394
D1FZ6701A	FORD	**473573**
D1FZ6K777A	FORD	414
D1FZ7052A	FORD	2443
D1FZ7A011A	FORD	2503
D1FZ7A011A	FORD	2503N
D1FZ8590A	FORD	35127
D1HA1190BA	FORD	370057A
D1HA1190DA	FORD	370057A
D1HZ1190A	FORD	370001A
D1HZ1190B	FORD	370057A
D1RY7052A	FORD	33X50X12!
D1TA1190AA	FORD	6954S
D1TW1177A	FORD	9568
D1TZ1190B	FORD	**416332**!
D1TZ3254A	FORD	**472636**!
D1TZ4676B	FORD	410686N
D1TZ7B215A	FORD	**415483**!
D1TZ7B215B	FORD	**473467**
D1TZ7B215C	FORD	**470898**
D1TZ7B215D	FORD	**471341**!
D1UZ4676A	FORD	7044NA
D1WG7048AA	FORD	2503
D1WG7048AA	FORD	2503N
D1ZW1177A	FORD	9363S
D200	MINNM	**472439**
D2081	THEW	**415991**
D2081	THEW	455146!
D2155BJ	SPG	2155
D22209	GAL	**415001**!
D2244	GRAY	**471554**!
D24226	GAL	**416654**!
D2534	THEW	**472157**
D2534	THEW	**472157**!
D2656	JA-HE	350942
D26703	GMC	410059
D26703	GMC	**470380**!
D271177B	FORD	1994
D271177B	FORD	48X70X9!
D27670	GAL	**417344**!
D27Z1177A	FORD	473823
D27Z1177B	FORD	1994
D27Z1177B	FORD	48X70X9!
D27Z1190A	FORD	1992
D27Z4676A	FORD	712011
D27Z6698A	FORD	411
D27Z6700A	FORD	1994
D27Z6700A	FORD	710313
D27Z6701A	FORD	228020
D27Z7052A	FORD	1990
D28802	GAL	**411245**!
D2883	ALLCH	**470590**
D2914	ALLCH	**412473**!
D29195	CASE	**417487**
D29862	CASE	341022
D29862	CLARK	341022
D2AP7052AA	FORD	7300S
D2AW4676A	FORD	3604
D2FZ1177A	FORD	1994
D2FZ1177A	FORD	48X70X9!
D2FZ7052A	FORD	1990
D2HA4813A2A	FORD	**415995**!
D2HA4813AA	FORD	**415995**!
D2HA4813BA	FORD	**415088**
D2HA4813BA	FORD	**415088**!
D2HZ3591A	FORD	340413
D2HZ3591D	FORD	**323138**!
D2RY6701A	FORD	**473573**
D2RY7052A	FORD	2551
D2TA4813A	FORD	**471271**
D2TA4813A1A	FORD	**471271**!
D2TA4813BA	FORD	**417484**
D2TZ1175A	FORD	**415960**
D2TZ4813A	FORD	**471271**!
D2TZ4813B	FORD	**417484**!
D2TZ6701A	FORD	228020
D2TZ7B215B	FORD	472635
D2TZ7B215C	FORD	**470682**
D2UP7052AA	FORD	410059
D2UP7052AA	FORD	**470380**!
D2UP7052AB	FORD	410059
D2UP7052AB	FORD	**470380**!
D2UZ7052AA	FORD	410059
D2UZ7052AA	FORD	**470380**!
D2VY3B592A	FORD	7013S
D2X1334	CATER	**471271**!
D3049P	CASE	**472179**
D31132	GAL	**417344**!
D31224	GAL	**472636**!
D32108	CASE	**472636**
D32109	CASE	415104N=
D33543	GAL	**415007**
D3556	COOK	55522=
D35824	GAL	**471442**!
D3665	CASE	**450456**!
D3666P	CASE	**473215**!
D37024	CASE	**415991**!
D37024	CASE	**415991**
D37Z7052A	FORD	710051
D37Z7052B	FORD	710051
D37Z7A248A	FORD	2025
D37Z7A248A	FORD	42X60X7!
D3812	THEW	**415995**!
D3813	THEW	**473214**
D397	ITM	**473235**!
D3HA1175BA	FORD	370019A
D3HA1175CA	FORD	370020A
D3HA1175CA	FORD	**415351**!
D3HA1190A1A	FORD	370001A
D3HA1190A1A	FORD	6638S
D3HA1190A2A	FORD	6638S
D3HS1175AA	FORD	370023A
D3HS1175BA	FORD	370019A
D3HS1175CA	FORD	370019A
D3HS1190AA	FORD	370001A
D3HS1190AA	FORD	380001A
D3HZ1175A	FORD	370003A
D3HZ7052A	FORD	**415379**
D3RY4676A	FORD	2642
D3TA1175BA	FORD	370046A
D3TA1175BA	FORD	5100
D3TA1175CA	FORD	370047A
D3TA1175CA	FORD	5649$
D3TA1175FA	FORD	5089
D3TA1175GA	FORD	370023A
D3TA1175J1A	FORD	4250
D3TA1175JA	FORD	4250
D3TA1175K2A	FORD	9864S
D3TA1190AA	FORD	4148
D3TA1190AB	FORD	4148
D3TA1190B1A	FORD	370132A
D3TA1190B2A	FORD	370132A
D3TZ-7B215A	FORD	**410308**!
D3TZ-7B215A	FORD	473468
D3TZ1175A	FORD	4250
D3TZ1175B	FORD	**416273**!
D3TZ1190A	FORD	4148
D3TZ7048A	FORD	**482163**!
D3TZ7288A	FORD	**470954**!
D3TZ7B215B	FORD	**410308**!
D40869	GAL	**415991**
D40869	GAL	455146!
D41447	CASE	**415995**!
D41543	GAL	**473232**
D42213	GAL	**417316**!
D42E6700A2A	FORD	2955
D42E6700A3A	FORD	2955
D42E6700AA	FORD	2955
D42E6701AA	FORD	5108
D42R7052A	FORD	**473215**
D42R7052AA	FORD	**473215**
D42R7288AA	FORD	313156
D42W1177A	FORD	3199
D440	ITM	**472397**!
D45718	GAL	**471744**!
D465	THEW	**455462**
D46867	GAL	45013S
D4721	KOEH	**416125**!
D47371	CASE	**416865**!
D4855	THEW	**415449**!
D48672	THEW	**415379**!
D48672	THEW	**415379**
D49214	GAL	200642
D49930	CASE	453309=
D4AW1177A	FORD	3195
D4AW4676B	FORD	7044NA
D4AZ1177A	FORD	3195
D4AZ4676A	FORD	7044NA
D4DT7052B3A	FORD	2655
D4FZ1177A	FORD	3214
D4FZ1177B	FORD	3199
D4FZ6700A	FORD	2955
D4FZ6701A	FORD	5108
D4PZ8590A	FORD	35127
D4T27B215B	FORD	**473204**
D4TZ4676B	FORD	712625
D4TZ6700A	FORD	**413246**
D4TZ7B215A	FORD	**471870**!
D4TZ7B215C	FORD	**472179**
D4TZ7B215D	FORD	710005
D4TZB215C	FORD	**472179**
D4ZW1177A	FORD	3214
D4ZZ7052A	FORD	**473215**
D4ZZ7052B	FORD	2655
D4ZZ7288A	FORD	313156
D4ZZ7A248A	FORD	2658
D51035	THEW	450335
D51051	GAL	**480630**!
D51163	GAL	**471424**!
D51517	CASE	**470530**
D51518	CASE	**472636**=
D52761	GAL	**418028**!
D5294	COC	204002
D53767	CASE	**412920**!
D53767	JOHND	**412920**!
D53775	CASE	**471766**!
D53835	CASE	**476470**
D550	THEW	**417316**!
D55436	CASE	**415263**
D578	NORDG	**471766**!
D5AP7052AA	FORD	7692S
D5AP7052BA	FORD	7300S
D5AW1177A	FORD	8660S
D5AW1177AA	FORD	3195
D5AW1177BA	FORD	3186
D5AW3D526A1A	FORD	**471645**!
D5AW3D526A1A	FORD	**471645**
D5AZ-3D526A	FORD	**471645**
D5AZ1177A	FORD	8660S
D5AZ7052A	FORD	7300S
D5AZ7052B	FORD	7692S
D5AZ7B498A	FORD	7929S
D5DT7052A3A	FORD	2655
D5DW1187A	FORD	3794
D5DZ1177A	FORD	3794
D5FZ7052A	FORD	2443
D5HZ1175A	FORD	370003A
D5HZ1190A	FORD	370132A
D5HZ1190B	FORD	370001A
D5HZ1190B	FORD	6638S
D5HZ1190C	FORD	370048A
D5HZ1190C	FORD	380048A
D5HZ1190E	FORD	370132A
D5HZ7B215A	FORD	**474276**!
D5HZ8K606A	FORD	**471195**!
D5MW1177A	FORD	3186
D5MY1177A	FORD	3186
D5NN-4115B	FORD	**415449**
D5NN6700A	FORD	**413246**
D5NN7288A	FORD	**471231**!
D5TZ1190D	FORD	370048A
D5TZ1190D	FORD	380048A
D5TZ4676A	FORD	**415234**
D5UA1175AA	FORD	4250
D5UA1175BA	FORD	9864S
D5UA1190AA	FORD	493637
D5UP7052AA	FORD	410059
D5UP7052AA	FORD	**470380**!
D5UZ1175A	FORD	4250
D5UZ1175B	FORD	9864S
D5UZ1190A	FORD	493637
D5UZ7A011A	FORD	**410308**!
D5ZZ7052A	FORD	2655
D5ZZ7052C	FORD	2655
D600500207	CONTI	50199S!
D600500207	CONTI	6863S!
D600K-232	CONTI	5M403
D600M-241	CONTI	**471649**!
D600S207	CONTI	50199S!
D600S207	CONTI	6863S!
D600S207	MASSE	50199S!
D600S207	MASSE	6863S!
D60319	KOEH	**416273**!
D60319	THEW	**416273**!
D61118	GAL	40410S
D61686	GAL	**474278**
D61686	GAL	6859S
D61687	GAL	**411394**!
D61688	GAL	**471649**!
D62105	THEW	**455336**
D62214	THEW	**416654**!
D62238	THEW	**471270**!
D62776	KOEH	**455079**!
D62776	THEW	**455079**!
D63359	THEW	**455144**
D63377	CASE	**470954***=
D636	JOHND	5M356
D636R	JOHND	5M356
D64053	GAL	**417605**
D64345	GAL	416327
D66074	GAL	**471570**!
D66158	GAL	**471570**!
D67195	GAL	**415138**!
D67995	GAL	455053N=
D68120	GAL	331356=
D68122	GAL	**415995**!
D68648	GAL	**413246**
D68649	GAL	**472394**
D69187	GAL	**415138**!
D6AP7052AA	FORD	2194
D6AP7052BA	FORD	7692S
D6AZ-3D526A	FORD	**471645**
D6EW4676A1A	FORD	**472070**
D6FZ4676A	FORD	**472070**
D6HZ7A283A	FORD	**473010**
D6HZ7B215A	FORD	452742

! Industrial Size/Type * Minor Width Difference $ F-M Number Is Part Of A Kit
= The U.S. customer service number is 877-4-TIMKEN. The Canadian customer service numbers are 800-565-4927 (English) and 800-565-0438 (French-Canadian).

Mfr. No.	Name	Zero Duplication or Recommended Industrial
D6NN7N838A	FORD	415458
D6TA1175B2A	FORD	3385
D6TZ1175A	FORD	722109
D6TZ1175B	FORD	722108
D6TZ1175C	FORD	722108
D6TZ4676A	FORD	455080
D6TZ4676B	FORD	9316
D6TZ4676C	FORD	9316
D6TZ7B215B	FORD	710005
D6TZ7B215C	FORD	473457!
D6UA1175A	FORD	3385
D6UZ1175A	FORD	3385
D6VA1175AA	FORD	3385
D6ZR7052AA	FORD	7692S
D6ZZ7052A	FORD	7692S
D70775	GAL	472924!
D70776	GAL	417252
D70792	GAL	470898
D71206	GAL	472164!
D71207	GAL	413248
D71402	GAL	415995!
D71417	GAL	413248
D7217	WHITE	471539!
D72594	GAL	456967V!
D72836	GAL	416229
D72837	GAL	471271!
D73740	CASE	415991
D73740	CASE	415991!
D74734	GAL	415449!
D74745	GAL	417480!
D75082	KOEH	416167!
D75464	GAL	415483
D76003	GAL	473473
D76745	KOEH	416888=
D768-011	FORSH	710413
D77768	GAL	472492!
D79884	GAL	471689!
D79998	GAL	473449
D7AR7A283AA	FORD	3638
D7AZ-3E502A	FORD	471645
D7HA1175A1A	FORD	370003A
D7HS1190CA	FORD	370132A
D7HZ1175A	FORD	370003A
D7HZ1175D	FORD	370003A
D7HZ1175E	FORD	370121A
D7HZ4676A	FORD	415082
D7HZ4676B	FORD	3591
D7HZ7B215A	FORD	417316!
D7RZ6701A	FORD	473573
D7TT7048CA	FORD	3388
D82559	GAL	416664!
D87224	CASE	456967V!*
D8AZ-3B592-A	FORD	471538
D8BW1177AA	FORD	8660S
D8BW4676AA	FORD	3604
D8BZ1177A	FORD	8660S
D8BZ4676A	FORD	3604
D8BZ4676AA	FORD	3604
D8HZ4573C	FORD	412473
D8HZ4676A	FORD	3136N
D8NN-1190CA	FORD	4162
D8NN6701AA	FORD	3341
D8NN6701BA	FORD	3341
D8RZ1175A	FORD	3395!
D8RZ1177A	FORD	3392
D8RZ1177B	FORD	3392
D8TR7A283AA	FORD	471652
D8TR7A283AA	FORD	482208!
D8TR7A283AB	FORD	3638
D8TZ-1175A	FORD	710045
D8TZ-3332-A	FORD	710385
D8TZ1175B	FORD	415960
D8TZ1175C	FORD	710044
D8TZ3254A	FORD	470682
D8TZ3254B	FORD	2300
D8TZ7B215B	FORD	473457!
D8UZ-7A283A	FORD	3638
D8UZ7A283B	FORD	3638
D92708	GAL	417361
D93056	GAL	472016
D95144	CASE	710026
D9668	GAL	412119!
D979	MINNM	417191
D979	MINNM	455165!
D9AC3B592AA	FORD	471538
D9AC3B592AB	FORD	471538
D9AW4676AA	FORD	3604
D9AZ3B592A	FORD	471538
D9AZ4676A	FORD	3604
D9AZ467AA	FORD	3604
D9BW4676A2A	FORD	472070
D9BW4676AA	FORD	472070
D9BZ-7052A	FORD	7692S
D9BZ1177A	FORD	3214
D9BZ1177B	FORD	3214
D9BZ4676A	FORD	472070
D9HZ6700A	FORD	710210
D9NN-7048-BA	FORD	472150
D9TZ7052A	FORD	473442!
D9TZ7B215A	FORD	3173
D9TZ7B215A	FORD	710928
DA320	EMSCO	415991
DA320	EMSCO	455146!
DA3724	JA-HE	471646!
DAX10680	GMC	416888
DAX2769	GMC	470380!
DAX6717	GMC	472258!
DB114	EMSCO	450133
DC2173	LETN	473462
DC2174	LETN	471766!
DC38	EMSCO	417205!
DC3959	LETN	416666
DC4823	LETN	472179
DC4988	LETN	411245!
DC57	EMSCO	412040
DC7147	LETN	472636!
DC7148	LETN	415187
DC7149	LETN	472397!
DC8061	LETN	416654!
DC8157	LETN	412725
DD126	OLIVE	471341!
DD16	FUNK	472185!
DD16B16	FUNK	473229
DD2037	LETN	416288!
DD3293	LETN	417205!
DD75269	FABCO	410825
DD80	EMSCO	415302
DD8042	LETN	455020
DDN-3539	FORD	223510
DE10030	ALLCH	450593!
DE10487	ALLCH	471750!
DE10523	ALLCH	471192
DE10986	ALLCH	471466!
DE1106	ALLCH	418028
DE1106	ALLCH	455137!
DE11125	ALLCH	474281!
DE11323	ALLCH	416332!
DE1461	ALLCH	471137
DE1537	ALLCH	471763
DE15694	ALLCH	415234!
DE2452	ALLCH	450040
DE2630	ALLCH	472924!
DE2631	ALLCH	470059
DE2631	ALLCH	470380!
DE30186	ALLCH	473228
DE31142	ALLCH	476838!
DE31846	ALLCH	470059
DE31846	ALLCH	470380!
DE31983	ALLCH	417484!
DE40655	ALLCH	471570!
DE4084	ALLCH	471570!
DE41209	ALLCH	417621!
DE41925	ALLCH	240385
DE44663	ALLCH	473448
DE45207	ALLCH	417344!
DE46231	ALLCH	415938
DE46686	ALLCH	450639
DE50319	ALLCH	472394
DE51142	ALLCH	476838!
DE51188	ALLCH	471341!
DE51737	ALLCH	471820
DE5534	ALLCH	471554!
DE55645	ALLCH	472394
DE55646	ALLCH	471271!
DE55648	ALLCH	471271!
DE56591	ALLCH	240119
DE5798	ALLCH	415023
DE60255	ALLCH	473419
DE60256	ALLCH	474264
DE62642	ALLCH	455583N!
DE64411	ALLCH	471539!
DE67238	ALLCH	470596
DE67592	ALLCH	472397!
DE68324	ALLCH	413246
DE69324	ALLCH	413246
DE70359	ALLCH	417354!
DE70419	ALLCH	471763
DE7359	ALLCH	417354!
DF1600	LETN	416239!
DF699	LETN	415138!
DGP13594	FAIRB	470712!
DGP13954	FAIRB	472144!
DGP14124	FAIRB	416271!
DHT-55065	MARMO	415984!
DHT-55066	MARMO	417485
DHT55020	MARMO	415371
DHT55021	MARMO	417621!
DK2781	F-R-H	417516
DM14	LK-BT	455019!
DMX4200	ALLCH	340413
DO10071	GMC	450068
DO10778	GAL	455024
DO20	ATP	7751H
DO23	ATP	472164
DO7	ATP	470774!
DP1648	ADAMS	415995!
DP1648	LETN	415995!
DP1648	WABCO	415995!
DR-1086	SPG	221122
DR0004	SPG	224025
DR0009	SPG	226480
DR0945	SPG	222510
DR0945	SPG	25X35X7!
DR1050	SPG	14X28X6
DR1066	SPG	28X38X7
DR1075	SPG	60X75X8
DR1078	SPG	78X100X10
DR1134	SPG	224040
DR1134	SPG	40X60X10!
DR1137	SPG	28X47X7!
DR1141	SPG	15X35X7
DR162	SPG	15X24X7
DR1788	SPG	231404
DR180	SPG	110X140X13!
DR180	SPG	231108
DR1815	SPG	12X22X7!
DR1872	SPG	45X60X7
DR1956	SPG	70X90X10!
DR1969	SPG	223535
DR1969	SPG	35X52X8!
DR1990	SPG	25X52X7!
DR2122	SPG	40X58X10!
DR2124	SPG	62X90X10
DR2132	SPG	221925
DR2136	SPG	38X56X10
DR2138	SPG	20X32X7
DR2199	SPG	224520
DR2199	SPG	45X60X10!
DR2493	SPG	114X140X13
DR2496	SPG	70X95X13
DR2525	SPG	25X50X10
DR2551	SPG	40X56X10!
DR2551	SPG	712551
DR2590	SPG	25X45X8
DR2591	SPG	222745
DR2591	SPG	27X45X8!
DR2597	SPG	10X19X7!
DR2597	SPG	221040
DR2607	SPG	45X80X10
DR261136	SHOV	240435
DR2613	SPG	1015N
DR2613	SPG	18X28X6!
DR2622	SPG	20X35X7!
DR2649	SPG	30X55X10
DR2656	SPG	15X30X7
DR2663	SPG	70X85X8
DR2665	SPG	224820
DR2665	SPG	48X62X8!
DR2720	SPG	160X200X12
DR2748	SPG	150X180X12
DR2843	SPG	224570
DR2874	SPG	65X85X10
DR2886	SPG	24X35X7
DR2892	SPG	229006
DR2892	SPG	229010
DR2901	SPG	222860
DR3011	SPG	35X62X10
DR3022	SPG	140X160X12
DR3027	SPG	35X45X7
DR3066	SPG	40X55X6
DR3090	SPG	1012
DR3090	SPG	1012N
DR3090	SPG	45X62X8!
DR3112	SPG	65X90X13
DR3190	SPG	8316
DR3209	SPG	224850
DR3209	SPG	48X72X7!
DR3210	SPG	25X36X7
DR327	SPG	125X150X12!
DR327	SPG	231250
DR3287	SPG	85X105X13
DR3309	SPG	25X36X8
DR3310	SPG	223610
DR3310	SPG	36X54X7.5
DR3310	SPG	710197!
DR3316	SPG	75X100X10
DR3333	SPG	1037
DR3335	SPG	22X35X7
DR3336	SPG	68X90X10
DR3343	SPG	224270
DR3347	SPG	85X110X12
DR3352	SPG	65X90X10!
DR3374	SPG	40X52X7!
DR3375	SPG	15X32X8
DR340	SPG	130X170X15
DR3435	SPG	110X135X13
DR3455	SPG	229520
DR3455	SPG	95X130X12!

! Industrial Size/Type * Minor Width Difference

= The U.S. customer service number is 877-4-TIMKEN. The Canadian customer service numbers are 800-565-4927 (English) and 800-565-0438 (French-Canadian).

Mfr. No.	Name	Zero Duplication or Recommended Industrial
DR3465	SPG	145X170X12
DR3474	SPG	70X100X13
DR3490	SPG	17X30X7
DR3502	SPG	80X110X12
DR3516	SPG	222820
DR3516	SPG	28X40X7!
DR3535	SPG	30X40X7!
DR3536	SPG	27X37X7
DR3537	SPG	130X160X12
DR3551	SPG	35X47X7
DR3573	SPG	225872
DR3581	SPG	120X145X12!
DR3581	SPG	231204
DR3589	SPG	120X145X12!
DR3589	SPG	231204
DR3641	SPG	222540
DR3672	SPG	52X69X10
DR3691	SPG	710216
DR3736	SPG	17X32X7
DR3737	SPG	18X32X8
DR3761	SPG	32X45X7
DR3769	SPG	223255
DR3769	SPG	32X52X7!
DR3776	SPG	44X60X10!
DR3796	SPG	100X120X10
DR3832	SPG	200X230X15!
DR3869	SPG	55X90X13
DR3892	SPG	16X28X7
DR3980	SPG	19X35X10!
DR4003	SPG	6X22X7
DR4004	SPG	7X22X7
DR4008	SPG	10X22X7
DR4019	SPG	15X26X7
DR4021	SPG	12X28X7!
DR4021	SPG	12X30X7
DR4024	SPG	12X30X7
DR4027	SPG	16X30X7
DR4029	SPG	18X30X7!
DR4029	SPG	221820
DR4033	SPG	15X32X8
DR4038	SPG	16X35X7
DR4045	SPG	17X40X7
DR4046	SPG	18X40X7
DR4048	SPG	22X40X8
DR4050	SPG	24X40X7!
DR4051	SPG	222540
DR4051	SPG	25X40X7!
DR4054	SPG	25X42X6
DR4056	SPG	30X42X7!
DR4060	SPG	20X47X7
DR4061	SPG	22X47X7
DR4062	SPG	24X47X7
DR4063	SPG	25X47X7
DR4064	SPG	26X47X7
DR4067	SPG	30X47X7
DR4068	SPG	32X47X7!
DR4072	SPG	35X50X7
DR4075	SPG	25X52X10
DR4079	SPG	35X52X7
DR4086	SPG	42X55X8!
DR4094	SPG	45X60X8
DR4096	SPG	30X62X7
DR4097	SPG	35X62X7!
DR4100	SPG	38X62X7
DR4101	SPG	40X62X7
DR4102	SPG	42X62X8
DR4104	SPG	1012
DR4104	SPG	1012N
DR4104	SPG	45X62X8!
DR4109	SPG	1992
DR4109	SPG	45X65X8!
DR4112	SPG	50X65X8!
DR4113	SPG	50X68X8!
DR4123	SPG	50X72X8
DR4124	SPG	225230
DR4124	SPG	52X72X8!
DR4126	SPG	55X72X8!
DR4128	SPG	58X72X8
DR4138	SPG	50X80X8
DR4140	SPG	55X80X8
DR4143	SPG	58X80X8
DR4145	SPG	226020
DR4151	SPG	60X85X8
DR4162	SPG	72X95X10
DR4163	SPG	75X95X10
DR4165	SPG	65X100X10
DR4167	SPG	68X100X13
DR4175	SPG	229006
DR4177	SPG	85X120X12
DR4178	SPG	90X120X12
DR4179	SPG	95X120X12
DR4180	SPG	100X120X12
DR4182	SPG	100X125X12
DR4183	SPG	100X130X12!
DR4184	SPG	105X130X12
DR4186	SPG	110X130X12
DR4188	SPG	105X140X12
DR4193	SPG	120X140X13!
DR4193	SPG	717004
DR4197	SPG	120X160X12
DR4198	SPG	125X160X12
DR4200	SPG	140X160X13!
DR4205	SPG	145X175X15
DR4206	SPG	150X180X15
DR4208	SPG	160X190X15
DR4209	SPG	170X200X15
DR4210	SPG	180X210X15
DR4228	SPG	224220
DR4232	SPG	25X42X10
DR4269	SPG	35X50X8!
DR4270	SPG	224560
DR4270	SPG	45X68X7!
DR4276	SPG	224020
DR4276	SPG	40X55X8!
DR4401	SPG	225035
DR4465	SPG	222535
DR4465	SPG	25X38X7!
DR4512	SPG	228020
DR4512	SPG	80X105X13!
DR4513	SPG	1884
DR4530	SPG	223542
DR4530	SPG	35X55X11!
DR4538	SPG	20X42X7
DR4576	SPG	62X80X10
DR4586	SPG	220X250X15
DR4617	SPG	55X75X10
DR4619	SPG	30X48X8!
DR4672	SPG	38X60X10
DR4725	SPG	55X85X10
DR4738	SPG	54X82X10
DR4746	SPG	223620
DR4772	SPG	42X72X10!
DR4894	SPG	40X58X8
DR4903	SPG	225420
DR4903	SPG	54X72X10!
DR4912	SPG	45X72X10
DR4914	SPG	30X50X8
DR4945	SPG	17X40X7
DR4983	SPG	115X140X12
DR5022	SPG	224835
DR5022	SPG	48X68X10!
DR5093	SPG	32X45X7
DR5110	SPG	223014
DR5119	SPG	224100
DR5119	SPG	40X65X10!
DR5121	SPG	30X50X7
DR5126	SPG	225005
DR5126	SPG	50X62X7!
DR5146	SPG	227540
DR5146	SPG	227550
DR5146	SPG	75X100X12!
DR5173	SPG	1175
DR5183	SPG	1979
DR5220	SPG	20X30X7!
DR5220	SPG	222025!
DR5265	SPG	**471224**
DR5308	SPG	**471466**
DR5312	SPG	322353
DR5340	SPG	340387
DR5357	SPG	**471255**!
DR5374	SPG	350877
DR5374	SPG	**471633**!
DR5381	SPG	50X75X12
DR5386	SPG	223035
DR5431	SPG	48X72X7!
DR5433	SPG	224015
DR5446	SPG	2008
DR5502	SPG	30X72X10
DR5503	SPG	35X72X10
DR5506	SPG	144X160X12
DR5550	SPG	224460
DR5574	SPG	190X220X16
DR5580	SPG	130X160X15
DR5600	SPG	3771
DR5609	SPG	228009
DR5620	SPG	55X78X10
DR5655	SPG	223543
DR5655	SPG	35X56X10!
DR5663	SPG	72X100X12
DR5721	SPG	52X68X8!
DR5722	SPG	223606
DR5722	SPG	26X42X10!
DR5728	SPG	225505
DR5728	SPG	55X70X8!
DR5733	SPG	20X52X7
DR5744	SPG	56X72X7
DR5801	SPG	224252
DR5811	SPG	52X75X12
DR5815	SPG	55X75X8
DR5826	SPG	56X68X10
DR5880	SPG	130X160X15
DR5957	SPG	225460
DR5957	SPG	54X85X10!
DR5980	SPG	221610
DR6052	SPG	227409
DR6062	SPG	228010
DR6069	SPG	2011
DR6101	SPG	226001
DR6102	SPG	716102
DR6125	SPG	2000
DR6125	SPG	224235
DR6125	SPG	42X58X7!
DR6127	SPG	712010
DR6128	SPG	712003
DR6129	SPG	712004
DR6150	SPG	12X25X7
DR6151	SPG	1041
DR6154	SPG	229005
DR6155	SPG	225020
DR6186	SPG	2025
DR6218	SPG	223240
DR6218	SPG	32X48X8!
DR6219	SPG	224470
DR6219	SPG	44X72X10!
DR6220	SPG	225875
DR6220	SPG	58X75X11!
DR6221	SPG	231404
DR6231	SPG	1979
DR6232	SPG	493637
DR6234	SPG	222655
DR6234	SPG	26X48X7!
DR6272	SPG	223830
DR6272	SPG	38X55X7!
DR6279	SPG	332134
DR6320	SPG	712020
DR6380	SPG	223014
DR6380	SPG	30X45X5!
DR6383	SPG	70X95X10
DR6389	SPG	85X105X10!
DR6401	SPG	223010
DR6445	SPG	716445
DR6456	SPG	3392
DR6468	SPG	223005
DR6469	SPG	716102
DR6470	SPG	222556
DR6471	SPG	222267
DR6472	SPG	1172
DR6474	SPG	1108
DR6481	SPG	228008
DR6484	SPG	716484
DR6507	SPG	1037
DR6527	SPG	222510
DR700181	SPG	722108
DR7035	SPG	223012
DR7035	SPG	30X44X7!
DR7064	SPG	710077
DR7161	SPG	710443
DR7203	SPG	228480
DR7216	SPG	223801!
DR7223	SPG	1979
DR7225	SPG	1214
DR7225	SPG	1214N
DR7226	SPG	**473274**
DR7227	SPG	224235
DR7227	SPG	42X58X7!
DR7228	SPG	**471442**!
DR7229	SPG	**473010**!
DR7230	SPG	**416154**!
DR7231	SPG	223620
DR7232	SPG	223014*
DR7233	SPG	**472572**!
DR7234	SPG	**470954**!
DR7237	SPG	**1213N**
DR7242	SPG	227040
DR7251	SPG	228480
DR766	SPG	60X80X8!
DR858	SPG	239127
DR86	SPG	224045
DR86	SPG	40X62X12!
DR898	SPG	80X100X10!
DR945	SPG	222510
DR945	SPG	25X35X7!
DR947	SPG	17X28X7
DR949	SPG	22X32X7
DR952	SPG	14X24X7!
DR958	SPG	20X40X10
DR962	SPG	28X42X8!
DR968	SPG	222240
DR968	SPG	22X40X7!
DS13	VICK	**473447**
DSD18286	NOK	1015N
DTA72646	FMC	**471571**
DTA72647	FMC	**472560N**!
DTA72648	FMC	**471271**!
DTA72649	FMC	**416919**
DTA72887	FMC	240735
DTA84924	FORD	**416888**!
DV1612	DALMO	240435

! Industrial Size/Type * Minor Width Difference

Mfr. No.	Name	Zero Duplication or Recommended Industrial
DVL4845	*MARMO*	340797
DW300208-5	*TROS*	8430S
DX-028	*COC*	**471766**!
DX13735	*GMC*	**472319**
DX1668	*GMC*	**471539**!
DX1780	*GMC*	**474253**
DX2202	*GMC*	417548
DX23256	*GMC*	**471504**!
DX24039	*GMC*	**472397**!
DX24040	*GMC*	**471835**!
DX26099	*GMC*	**471413**!
DX26208	*GMC*	**417484**!
DX2815	*GMC*	**417487**
DX28649	*GMC*	**471504**!
DX30028	*MASSE*	**470530**!
DX30183	*MASSE*	**417343**!
DX30765	*MASSE*	240733
DX31660	*MASSE*	**472397**!
DX32980	*GMC*	240435
DX3472	*GMC*	455251H
DX3473	*GMC*	75251S
DX35048	*GMC*	482069N
DX38472	*GMC*	**415327**
DX38493	*GMC*	**450084**!
DX39218	*GMC*	**417365**
DX41675	*GMC*	**471424**=
DX43140	*GMC*	**476470**
DX44455	*GMC*	**415294**=
DX44689	*GMC*	**473010**=
DX49720	*GMC*	**470954**
DX5309	*GMC*	**472016**
DX54461	*GMC*	**417171**=
DX75341	*MASSE*	**471267**!
DY11683	*EATON*	450165
DY11683	*EATON*	**471801**!
DY11730	*EATON*	**471984**
DY11731	*EATON*	**471984**
E0A1175	*FORD*	**473238**!
E0DT7052A3A	*FORD*	2655
E0DW1177AA	*FORD*	9569S
E0DZ1177B	*FORD*	9569S
E0ET7048AA	*FORD*	2503
E0ET7048AA	*FORD*	2503N
E0ET7052AA	*FORD*	2443
E0HT1190AA	*FORD*	370001A
E0HT1190AA	*FORD*	380001A
E0HZ4676A	*FORD*	477163N
E0HZ4676B	*FORD*	477163N
E0HZ7052A	*FORD*	**472213**
E0NN1190AA	*FORD*	4162
E0RZ7288A	*FORD*	313156
E0TA1175AA	*FORD*	9864S
E0TA1190B1A	*FORD*	4160
E0TA6362	*FORD*	1040=
E0TW1177A1A	*FORD*	710067
E0TW1177A2A	*FORD*	**473228**
E0TW1177BA	*FORD*	3195
E0TW4676A1A	*FORD*	7044NA
E0TZ1175A	*FORD*	9864S
E0TZ1177A	*FORD*	710067
E0TZ1177B	*FORD*	3195
E0TZ1177C	*FORD*	**473228**
E0TZ1190A	*FORD*	4148
E0TZ1190B	*FORD*	4160
E0TZ1190C	*FORD*	4148
E0TZ1190D	*FORD*	4160
E0TZ1190E	*FORD*	4160
E0TZ3254A	*FORD*	710043
E0TZ3254B	*FORD*	2146
E0TZ4676A	*FORD*	9316
E0TZ4676B	*FORD*	7044NA
E0TZ7B215A	*FORD*	341022
E0TZ7B215B	*FORD*	**472572**
E0TZ7B215C	*FORD*	**473237**
E0TZ7B215D	*FORD*	**472572**
E0W1177AA	*FORD*	9569S
E0ZR7052BA	*FORD*	2326*=
E0ZR7288AA	*FORD*	313156
E0ZZ-7A283A	*FORD*	222820
E0ZZ7052A	*FORD*	2443
E0ZZ7288A	*FORD*	313156
E0ZZ7288B	*FORD*	4127
E1050930	*SPICE*	**415449**!
E1091	*EUCLD*	376590A
E11093	*AT SU*	**470898**!
E1110	*WHITE*	**410987**!
E1127699	*CHRYS*	**472012**
E11381	*GEM*	**471442**!
E11449	*GEM*	6703S
E11923	*GEM*	**480630**!
E1269	*EUCLD*	240736
E13232	*IH*	**473458**!
E13993	*IH*	**471192**
E1443	*WHITE*	**471138**!
E1471180	*ALLCH*	**415867**
E1471545	*ALLCH*	**352541**
E15419	*GEM*	**473467**
E1569	*WHITE*	**412871**!
E1582	*WHITE*	**470565**!
E1588	*OLIVE*	50254=
E1590	*OLIVE*	**471267**!
E1590	*WHITE*	**471267**!
E16468E	*JOHND*	**480630**
E17609	*JOHND*	**416339**
E17609E	*JOHND*	**416339**
E18979	*JOHND*	203006!
E18979	*JOHND*	205006=
E18979E	*JOHND*	203006!
E193	*GRAY*	**416921**!
E19501	*GEM*	6703S
E19505	*GEM*	**471689**!
E19799	*GEM*	240949
E19869	*GEM*	240414
E19897	*JOHND*	6703S
E19897E	*JOHND*	6703S
E1AP-7052BA	*FORD*	2854
E1AP-7052BA	*FORD*	7300S
E1AP7052A	*FORD*	7692S
E1AP7052AA	*FORD*	7692S
E1AW1177AA	*FORD*	8660S
E1AZ1177A	*FORD*	8660S
E1AZ1177B	*FORD*	8660S
E1EP7F401A2A	*FORD*	4539H
E1EW1177A1A	*FORD*	3622
E1EW1177A3A	*FORD*	3622
E1FZ1175A	*FORD*	473677
E1FZ1177A	*FORD*	3622
E1FZ6700A	*FORD*	3771
E1FZ6701A	*FORD*	3772
E1FZ6701A	*FORD*	5287
E1FZ6K292A	*FORD*	3774
E1FZ7A011A	*FORD*	710053
E1FZ7B498A	*FORD*	342517
E1FZ7F401A	*FORD*	4539H
E1HT1175AA	*FORD*	370003A
E1HT1175BA	*FORD*	370003A
E1HZ1175A	*FORD*	370003A
E1HZ1175B	*FORD*	370003A
E1HZ4676A	*FORD*	100263
E1HZ4676A	*FORD*	3905
E1NN3N632AA	*FORD*	**471267**
E1SM6700A4A	*FORD*	3771
E1TZ4676A	*FORD*	5778
E1TZ7B215A	*FORD*	**472572**
E1TZ7B215B	*FORD*	3173
E1TZ7B215B	*FORD*	710928
E20366E	*JOHND*	240119
E207	*MINNM*	**471766**!
E20811	*FULLE*	**415458**!
E21330	*FULLE*	**415458**!
E2136	*FULLE*	**417487**
E2136	*FULLE*	**417487**!
E215	*PORTR*	**416892**!
E217	*PORTR*	**471766**!
E21812	*FULLE*	**415449**!
E21830	*FULLE*	**476470**
E227	*PORTR*	**416865**!
E2340	*EUCLD*	733105
E2341	*EUCLD*	733106
E23614	*FULLE*	**471224**
E2400300	*CHRYS*	7300S
E2431	*EUCLD*	733107
E2432	*EUCLD*	733108
E2433	*EUCLD*	733109
E2434	*EUCLD*	733110
E2435	*EUCLD*	733111
E2436	*EUCLD*	733112
E2437	*EUCLD*	733113
E2438	*EUCLD*	733114
E25091	*EATON*	**471276**
E2556	*FULLE*	415146!
E2556	*FULLE*	**415991**
E27012	*FULLE*	**472164**!
E27W4676A1A	*FORD*	3604
E27W4676AA	*FORD*	3604
E28263	*FULLE*	55193=
E28265	*FULLE*	**417196**!
E29006	*IH*	**471766**!
E2DZ-7052A	*FORD*	7692S
E2HS1131BA	*FORD*	HU009A
E2HS1175AA	*FORD*	370046A
E2HS1175BA	*FORD*	**417506**
E2HS1175CA	*FORD*	370047A
E2HS1175DA	*FORD*	370004A
E2HS1190AA	*FORD*	370054A
E2HS1190CA	*FORD*	370132A
E2HT1190AA	*FORD*	370001A
E2HT1190AA	*FORD*	380001A
E2HT1190BA	*FORD*	370048A
E2HT1190BA	*FORD*	380048A
E2HZ1177A	*FORD*	370003A
E2TA1190AA	*FORD*	370001A
E2TA1190AA	*FORD*	380001A
E2TA1190CA	*FORD*	4148
E2TE6701A2A	*FORD*	713750
E2TW4676AA	*FORD*	7044NA
E2TZ4676A	*FORD*	7044NA
E2ZE6701A4A	*FORD*	3909
E2ZE6701A4A	*FORD*	5277
E2ZE6701AA	*FORD*	3909
E2ZZ6701A	*FORD*	3909
E2ZZ7052A	*FORD*	2655
E2ZZ7288A	*FORD*	4127
E30479	*JOHND*	**415449**!
E312260SS	*SPG*	42260S
E313290SS	*SPG*	43290S
E3145BJ	*SPG*	5124
E3159	*CHRYS*	**416127**
E3160	*CHRYS*	**416127**
E31920	*JOHND*	**472185**!
E31925	*JOHND*	**415072**
E31926	*JOHND*	**416239**!
E32037M	*CHRYS*	**471553**!
E32252015	*IH*	**473227**
E32252033	*IH*	**416921**!
E32252038	*IH*	**473459**
E32354E	*JOHND*	**471649**!
E328332	*IH*	**417316**!
E354040TA	*SPG*	354040
E354041TA	*SPG*	354041
E36542	*JOHND*	41461S
E36910	*FULLE*	**412920**!
E37542	*JOHND*	41461S
E37A-3B470AB	*FORD*	340835
E37A1190AB	*FORD*	8312
E37A1190BA	*FORD*	6815
E38705	*WILYS*	**472179**
E38707	*WILYS*	**471801**!
E38714	*WILYS*	**472179**
E3EC-1N013-AA	*FORD*	710365
E3FZ-3K070-A	*FORD*	710365
E3FZ7A011A	*FORD*	3638
E3FZ7F401A	*FORD*	4539H
E3HZ1190B	*FORD*	370001A
E3HZ1190B	*FORD*	380001A
E3HZ1190C	*FORD*	370048A
E3HZ1190C	*FORD*	380048A
E3HZ4573A	*FORD*	**412473**
E3HZ4573C	*FORD*	**412473**
E3HZ4674A	*FORD*	712937
E3HZ4676A	*FORD*	9773
E3HZ4676B	*FORD*	**416654**
E3HZ4676C	*FORD*	**415458**
E3HZ7048A	*FORD*	**473454**
E3TC-3591-AA	*FORD*	710370
E3TW1177A1A	*FORD*	8835S
E3TW1177A2A	*FORD*	8835S
E3TZ-1S177A	*FORD*	8835S
E3TZ-3591-B	*FORD*	710370
E3TZ-3738-A	*FORD*	221922
E3TZ-3B470B	*FORD*	340835
E3TZ-7052C	*FORD*	2443
E3TZ1175A	*FORD*	8314
E3TZ1175B	*FORD*	722109
E3TZ1175C	*FORD*	722109
E3TZ1175D	*FORD*	722108
E3TZ1177A	*FORD*	8835S
E3TZ1190A	*FORD*	8312
E3TZ1190B	*FORD*	6815
E3TZ1190C	*FORD*	4148
E3TZ1190D	*FORD*	4148
E3TZ3254A	*FORD*	3543
E3TZ3254B	*FORD*	710065
E3TZ3254C	*FORD*	470672
E3TZ3591A	*FORD*	710370
E3TZ3B470A	*FORD*	340835
E3TZ4676A	*FORD*	3604
E3TZ4676B	*FORD*	4244
E3TZ6700A	*FORD*	3894V
E3TZ6700B	*FORD*	8316
E3TZ6700C	*FORD*	2012V
E3TZ6701A	*FORD*	3893V
E3TZ6701C	*FORD*	2377
E3TZ7052A	*FORD*	2443
E3TZ7A011	*FORD*	3622
E3TZ7B215A	*FORD*	4143
E3TZ7B215B	*FORD*	**473237**
E3TZ7B215C	*FORD*	4141
E3TZ7B215D	*FORD*	4141
E3TZ7B215E	*FORD*	4143
E3TZ7B215F	*FORD*	**473237**
E3TZ7B215G	*FORD*	4143
E3TZ7B215H	*FORD*	**473237**
E400B-201	*CONTI*	**327303**!
E4093SS	*SPG*	5452
E4099CA	*SPG*	4099
E4101BG	*SPG*	5109
E4110CA	*SPG*	5123

! Industrial Size/Type * Minor Width Difference

= The U.S. customer service number is 877-4-TIMKEN. The Canadian customer service numbers are 800-565-4927 (English) and 800-565-0438 (French-Canadian).

Mfr. No.	Name	Zero Duplication or Recommended Industrial
E43E6700A2A	*FORD*	714075
E43E6700D	*FORD*	223420
E43Z6700A	*FORD*	714075
E43Z6700A2A	*FORD*	714075
E43Z6700B	*FORD*	223012
E43Z6700B	*FORD*	30X44X7!
E43Z6700D	*FORD*	223420
E43Z6700E	*FORD*	714075
E43Z6700F	*FORD*	223012
E43Z6700F	*FORD*	30X44X7!
E43Z6700G	*FORD*	223235
E43Z6701A	*FORD*	229005
E43Z7288A	*FORD*	710274
E4400RX	*SPG*	4400=
E4401RX	*SPG*	4401=
E44082	*CUMMI*	**473224**!
E44473	*CUMMI*	**330385**
E44583	*CUMMI*	470059
E44583	*CUMMI*	**470380**!
E45	*NOVO*	470059
E45	*NOVO*	**470380**!
E45116	*CUMMI*	**470954**!
E45123	*CUMMI*	**472810**!
E45374	*CUMMI*	**472409**
E456500SS	*PACIF*	**416500**!
E45Y6700A	*FORD*	223801!
E45Y6701A	*FORD*	229005
E472858VG	*SPG*	5133
E47805XA	*SPG*	8370S
E48313	*JOHND*	204017
E49968	*JOHND*	3095
E4EE6701A2A	*FORD*	3772
E4FZ6701A	*FORD*	3772
E4HN6701AA	*FORD*	712449
E4HT1175AA	*FORD*	370003A
E4HZ1175B	*FORD*	370003A
E4HZ4478A	*FORD*	4561V
E4HZ4573A	*FORD*	100495
E4HZ4573A	*FORD*	4810V
E4HZ4676A	*FORD*	100263
E4HZ4676A	*FORD*	3905
E4HZ4676B	*FORD*	3143N
E4HZ7050C	*FORD*	473814
E4HZ7B215A	*FORD*	330749V
E4HZ7B215B	*FORD*	5133
E4HZ7B215C	*FORD*	39930
E4LY-7A248A	*FORD*	224052
E4TE6701AA	*FORD*	5118
E4TW4676A1A	*FORD*	3604
E4TZ-7B215A	*FORD*	4333N
E4TZ1190A	*FORD*	4250
E4TZ3254A	*FORD*	710043
E4TZ3254B	*FORD*	710043
E4TZ3B470A	*FORD*	722108
E4TZ4676A	*FORD*	5778
E4TZ4676C	*FORD*	5778
E4ZE6701A2A	*FORD*	3772
E500093901	*WHITE*	**415035**=
E50607	*JOHND*	291099
E53786M	*CHRYS*	**471689**!
E54058	*JOHND*	**472535**
E544145	*FULLE*	**471413**
E5DW4676AA	*FORD*	3604
E5DZ4676A	*FORD*	3604
E5HN6700AA	*FORD*	712511
E5HT1175CA	*FORD*	370023A
E5HT1175GA	*FORD*	370003A
E5HT1190AA	*FORD*	370132A
E5HT1190DA	*FORD*	370001A
E5HT1190DA	*FORD*	380001A
E5HZ1190A	*FORD*	370132A
E5HZ4573A	*FORD*	100494
E5HZ4573A	*FORD*	**476470**
E5HZ4676A	*FORD*	417986N
E5HZ4676B	*FORD*	**415082**
E5NN-4969-A	*FORD*	713166
E5NN6701BA	*FORD*	712449
E5RY1177A	*FORD*	224250
E5RY1177A	*FORD*	224253
E5RY1177A	*FORD*	42X62X8!
E5RY4676A	*FORD*	712011
E5TE6700A2A	*FORD*	2942
E5TW1177AA	*FORD*	710067
E5TW1177BA	*FORD*	370047A
E5TW4676BA	*FORD*	4278
E5TZ-3332-A	*FORD*	710304
E5TZ1177A	*FORD*	710067
E5TZ1177B	*FORD*	370047A
E5TZ1190A	*FORD*	6815
E5TZ3254A	*FORD*	710095
E5TZ4676A	*FORD*	4278
E5TZ4676B	*FORD*	4278
E5TZ4676C	*FORD*	9316
E5TZ6700A	*FORD*	16X28X7!
E5TZ6700A	*FORD*	221610
E5TZ6700B	*FORD*	224460
E5TZ6700C	*FORD*	2942
E5TZ6700D	*FORD*	712007
E5TZ6701A	*FORD*	228005
E5TZ6701C	*FORD*	2377
E5TZ6701D	*FORD*	3893V
E5TZ7052A	*FORD*	223014
E5TZ7052A	*FORD*	30X45X5!
E5TZ7052B	*FORD*	2655
E5TZ7A248A	*FORD*	2658
E5TZ7B215A	*FORD*	**472572**
E5ZZ6701A	*FORD*	3909
E619	*NOVO*	**450593**!
E620	*OLIVE*	**472299**
E620	*WHITE*	**472299**
E62795	*AT SU*	**481864**
E62GE9	*FORD*	**473446**
E632008	*GMC*	**416865**!
E634125-3	*LEROI*	**415437**
E63568	*GMC*	**416158**
E63E6700AA	*FORD*	714075
E653724	*GMC*	**471652**
E663125-3	*LEROI*	**415437**
E66943M	*CHRYS*	**471750**!
E66944M	*CHRYS*	**416892**!
E67409M	*CHRYS*	**417563**
E67410M	*CHRYS*	**417563**
E682661	*GMC*	**415483**
E693	*OLIVE*	**473239**
E6AE6700A2A	*FORD*	**350936**
E6DC1249AA	*FORD*	6815
E6DW-117AA	*FORD*	8835S
E6DW1177AA	*FORD*	3622
E6DZ1177A	*FORD*	3622
E6DZ1177AM	*FORD*	3622
E6DZ1249A	*FORD*	6815
E6DZ3591A	*FORD*	710504
E6DZ6700A	*FORD*	**350936**
E6DZ7F401A	*FORD*	4189H
E6EE6700A2A	*FORD*	3771
E6EE6K292A2A	*FORD*	3774
E6FZ7F401A	*FORD*	4539H
E6HS1175AA	*FORD*	370003A
E6HS1175BA	*FORD*	370023A
E6HT1175AA	*FORD*	370023A
E6HZ1175C	*FORD*	370023A
E6HZ1175E	*FORD*	370023A
E6HZ1190A	*FORD*	370132A
E6HZ1190D	*FORD*	370001A
E6HZ1190D	*FORD*	380001A
E6HZ4676B	*FORD*	4564V
E6HZ4676D	*FORD*	**415088**
E6HZ6701A	*FORD*	712449
E6HZ6701B	*FORD*	712449
E6HZ7048A	*FORD*	710211
E6HZ7052A	*FORD*	712512
E6SP1177AA	*FORD*	3622
E6SP7F401AA	*FORD*	4189H
E6TA1190AA	*FORD*	4148
E6TE6700A2A	*FORD*	710210
E6TE6700AA	*FORD*	710210
E6TZ-1S190A	*FORD*	4148
E6TZ1190A	*FORD*	4148
E6TZ6700A	*FORD*	2012V
E6TZ6701A	*FORD*	5118
E6TZ7B216A	*FORD*	**330385**!
E6ZE6700A2A	*FORD*	2955
E6ZE6700AA	*FORD*	2955
E6ZE6701A2A	*FORD*	3909
E6ZE6701A2A	*FORD*	5277
E70	*BRAD*	**471652**
E7059144	*LUF*	**417549**!
E7059160	*LUF*	55469
E7066676	*LUF*	**472397**!
E7066677	*LUF*	**476470**
E7075330	*LUF*	**473225**
E7075331	*LUF*	**411376**!
E7075332	*LUF*	**473239**!
E7075592	*LUF*	476871=
E7075593	*LUF*	**471272**!
E7075689	*LUF*	**415645**!
E7075689	*LUF*	455104
E7075690	*LUF*	**474274**
E7075786	*LUF*	**415725**!
E7075788	*LUF*	**415867**
E7075792	*LUF*	**417603**!
E7075813	*LUF*	**417343**!
E7076823	*LUF*	**417433**!
E7077966	*LUF*	**471466**!
E71	*BRAD*	**471267**!
E711456	*GMC*	**416951**
E71175M	*CHRYS*	**471571**
E728	*NOVO*	**471763**
E729	*NOVO*	**471689**!
E755	*NOVO*	**471255**!
E756	*NOVO*	**471570**!
E759286	*LUF*	**417567**
E7AZ6701A	*FORD*	2377
E7EE6701A1A	*FORD*	3772
E7FZ6700A	*FORD*	3771
E7FZ6701A	*FORD*	3772
E7FZ6K292A	*FORD*	3774
E7GZ-1177A	*FORD*	4990
E7GZ-1177B	*FORD*	710323
E7GZ-1177C	*FORD*	**1213N**
E7GZ-1177D	*FORD*	2007N
E7GZ-1177E	*FORD*	2007N
E7GZ12143A	*FORD*	427RR
E7GZ6700A	*FORD*	223012
E7GZ6701A	*FORD*	228250
E7GZ6701A	*FORD*	710448
E7GZ7288A	*FORD*	221620
E7GZ7A011A	*FORD*	222430
E7HT1190AA	*FORD*	370001A
E7HT1190AA	*FORD*	380001A
E7HZ1175A	*FORD*	370047A
E7HZ1190A	*FORD*	370001A
E7HZ4676A	*FORD*	417987N
E7HZ6700A	*FORD*	712511
E7HZ6700B	*FORD*	710210
E7HZ7052A	*FORD*	**417316**
E7HZ7918A	*FORD*	713750
E7TA1190BA	*FORD*	4160
E7TZ1177A	*FORD*	2146
E7TZ1190A	*FORD*	710091
E7TZ1190B	*FORD*	4160
E7TZ7052B	*FORD*	713771
E7TZ7052C	*FORD*	1217
E7TZ7052D	*FORD*	1209
E7TZ7B215-A	*FORD*	710402
E7TZ7B215B	*FORD*	714503
E7UZ4676A	*FORD*	719316
E80420	*WILYS*	**470898**!
E804820	*WILYS*	**470898**!
E810751	*WILYS*	240733
E83Z4676A	*FORD*	**472258**
E83Z6700A	*FORD*	714075
E844	*NOVO*	**474264**
E845	*NOVO*	470059
E845	*NOVO*	**470380**!
E865	*NORDG*	**450326**
E86884	*CHRYS*	**471413**
E87W4676AA	*FORD*	4278
E87W4676BA	*FORD*	3604
E8BZ-1177B	*FORD*	2007N
E8BZ1177A	*FORD*	1126
E8BZ7A011A	*FORD*	222238
E8DE6701AA	*FORD*	3772
E8DE6701AP	*FORD*	3772
E8DZ6701A	*FORD*	3772
E8GY-1177A	*FORD*	1973
E8HZ7B215A	*FORD*	39920
E8TW1177BA	*FORD*	370047A
E8TW4676AA	*FORD*	4278
E8TZ-4676B	*FORD*	4278
E8TZ-7052B	*FORD*	223012
E8TZ1175A	*FORD*	**418028**
E8TZ1177B	*FORD*	370047A
E8TZ4676A	*FORD*	4525V
E8TZ4676C	*FORD*	3604
E8TZ7050E	*FORD*	223535
E8TZ7052A	*FORD*	1990
E8TZ7052C	*FORD*	7692S
E8TZ7052D	*FORD*	1981
E8TZ7052F	*FORD*	223608
E8TZ7B215A	*FORD*	4503N
E8ZZ6700A	*FORD*	2955
E9020080	*LUF*	**471567**!
E9020090	*LUF*	**471267**!
E9020097	*LUF*	**471646**!
E9020100	*LUF*	**470590**
E9020120	*LUF*	**471689**!
E9020130	*LUF*	**470712**!
E9020135	*LUF*	2669
E9020180	*LUF*	**470625**!
E9020198	*LUF*	**473232**!
E9020210	*LUF*	**473236**!
E9020220	*LUF*	**472185**!
E9020225	*LUF*	**472185**!
E9020227	*LUF*	**473238**!
E9020230	*LUF*	**473462**
E9020240	*LUF*	**471833**
E9020250	*LUF*	**471833**
E9020255	*LUF*	**472016**
E9020260	*LUF*	**473245**!
E9020270	*LUF*	**471272**!
E9020279	*LUF*	**413247**!
E9020280	*LUF*	**413247**!
E9020285	*LUF*	**417073**
E9020290	*LUF*	**417073**
E9020300	*LUF*	**415449**!
E9020305	*LUF*	**455655**!
E9020310	*LUF*	**415458**!

! Industrial Size/Type

= The U.S. customer service number is 877-4-TIMKEN. The Canadian customer service numbers are 800-565-4927 (English) and 800-565-0438 (French-Canadian).

Mfr. No.	Name	Zero Duplication or Recommended Industrial
E9020320	*LUF*	**455151**
E9020330	*LUF*	**417316**!
E9020345	*LUF*	**416654**!
E9020350	*LUF*	**416654**
E9020360	*LUF*	**417349**!
E9020365	*LUF*	**417349**!
E9020369	*LUF*	**415995**!
E9020370	*LUF*	**415995**!
E9020370	*LUF*	**415995**!
E9020390	*LUF*	455022
E9020400	*LUF*	**476470**!
E9020400	*LUF*	**476470**
E9020405	*LUF*	**415025**
E9020410	*LUF*	**455026**
E9020415	*LUF*	**415991**
E9020415	*LUF*	**415991**!
E9020420	*LUF*	**415991**
E9020420	*LUF*	455146!
E9020425	*LUF*	**415437**
E9020440	*LUF*	**417501**
E9020445	*LUF*	**415379**
E9020450	*LUF*	**415379**
E9020455	*LUF*	**415379**
E9020465	*LUF*	**415034**!
E9020470	*LUF*	**415034**!
E9020480	*LUF*	**415035**
E9020480	*LUF*	**415035**!
E9020485	*LUF*	**415035**
E9020485	*LUF*	475845!
E9020490	*LUF*	**415035**
E9020491	*LUF*	**415036**
E9020495	*LUF*	**415041**
E9020505	*LUF*	**455194**
E9020510	*LUF*	416556!
E9020510	*LUF*	**472157**
E9020515	*LUF*	**415196**!
E9020520	*LUF*	**415196**!
E9020525	*LUF*	55199=
E9020530	*LUF*	55199=
E9020532	*LUF*	**417525**
E9020540	*LUF*	**416888**!
E9020545	*LUF*	**416154**!
E9020550	*LUF*	**416154**!
E9020570	*LUF*	**415351**!
E9020580	*LUF*	**417273**
E9020590	*LUF*	**417273**
E9020600	*LUF*	**416865**!
E9020610	*LUF*	**416865**!
E9020622	*LUF*	**417542**
E9020645	*LUF*	55357
E9020660	*LUF*	**416107**!
E9020670	*LUF*	7006S
E9020685	*LUF*	**416666**
E9020690	*LUF*	**455297**
E9020720	*LUF*	**415072**
E9020750	*LUF*	**417563**
E9020816	*LUF*	**416364**!
E9020820	*LUF*	**416364**!
E9020822	*LUF*	**416239**!
E9020828	*LUF*	**416044**
E9020850	*LUF*	**415867**
E9020860	*LUF*	**415551**
E9020900	*LUF*	**417601**
E9020905	*LUF*	**417601**
E9020910	*LUF*	**55301S**
E9020960	*LUF*	**415128**
E9020965	*LUF*	**415482**
E906292	*AMC*	**472560N**!
E906292	*WILYS*	**472560N**!
E920110	*LUF*	**471647**
E920400	*LUF*	**476470**
E920400	*LUF*	**476470**!
E924175	*WILYS*	**471558**
E92Z-1177A	*FORD*	1932
E92Z-1177B	*FORD*	224235
E92Z-1S177AA	*FORD*	1932
E92Z-7F401A	*FORD*	710446
E92Z3C084A	*FORD*	710223
E92Z3C084B	*FORD*	710224
E92Z6700A	*FORD*	223420
E92Z6701A	*FORD*	229005
E92Z7A011A	*FORD*	1990
E92Z8507A	*FORD*	35418
E942	*NOVO*	**472179**
E951036	*WILYS*	**472354**!
E95841M	*CHRYS*	**471705**!
E97127M	*CHRYS*	**450339**
E973	*NOVO*	**473419**
E99Z4676A	*FORD*	5778V
E9DZ6700A	*FORD*	**1213N**
E9DZ6700B	*FORD*	710220
E9SW4B416AB	*FORD*	714569
E9SW4B416BAB	*FORD*	4569V
E9SZ4B416A	*FORD*	4569V
E9SZ4B416A	*FORD*	714569
E9TP7052AA	*FORD*	7300S
E9TP7A248A	*FORD*	3404
E9TP7A248A	*FORD*	3404H
E9TP7A248AA	*FORD*	3404
E9TP7A248AA	*FORD*	3404H
E9TZ-7052A	*FORD*	7412S
E9TZ-7A248A	*FORD*	3404
E9TZ4676A	*FORD*	4525V
E9TZ7A248B	*FORD*	3404
EA223638	*GMC*	240733
EA223694	*GMC*	343185
EA223910	*GMC*	**451143**
EA223917	*GMC*	240731
EAA5281203	*AM BO*	340413
EAA602259	*AM BO*	340817
EAA602275	*AM BO*	240414
EAA6336B	*FORD*	5596=
EAA6700A	*FORD*	**350936**
EAA6700B	*FORD*	**350936**
EAA6700B1	*FORD*	**350936**
EAA6700B2	*FORD*	**350936**
EAA6700B2	*NOVI*	**350936**
EAA6700B4	*FORD*	**350936**
EAA6700BMR	*FORD*	**350936**
EAA6701A	*FORD*	5596=
EAF18183A	*FORD*	**472810**!
EAF6700A	*FORD*	**350936**
EAF6700B	*FORD*	**350936**
EAF6700F	*FORD*	**350936**
EBK2155	*AVCO*	**417509**
EBK2161	*AVCO*	**470088**
EBU6348B	*FORD*	5479
EC-236	*LAZOR*	494122
EC-263	*LAZOR*	474134
EC265	*LAZOR*	224570
EC265	*LAZOR*	45X72X12!
ECA13C69	*GR-DV*	J1124
ECU9364A	*FORD*	12473
ED-288	*LAZOR*	2002
EDX6004	*ALLCH*	**450593**!
EE352	*MINNM*	**472157**
EE352	*MINNM*	**472157**!
EE352A	*MINNM*	**472157**
EE352A	*MINNM*	**472157**!
EE35716	*OSHKO*	**472185**!
EE35775	*OSHKO*	**417484**!
EE35781	*OSHKO*	**476470**!
EE35781	*OSHKO*	**476470**
EE35783	*OSHKO*	**411253**!
EE363	*MINNM*	**473463**
EG2949CA2	*SPG*	5131
EH-135	*LAZOR*	227410
EH-266	*LAZOR*	**473367**
EH-292	*LAZOR*	1938
EH-294	*LAZOR*	1943
EH-295	*LAZOR*	494117
EH14184	*GEM*	240733
EH41594	*CUMMI*	**471647**
EHX6011	*ALLCH*	**473448**
EHX6012	*ALLCH*	**472164**!
EJN7610041	*AM BO*	**471652**
EJN76120195	*AM BO*	**472560N**!
EJN80295	*AM BO*	6863S!
EJN9012218	*AM BO*	240009
EK475937HG	*SPG*	**415937**
EK8515BX	*SPG*	5126
EL-121	*LAZOR*	**473179**!
EL0900421	*ROCKW*	**415483**!
EL0900626	*CONDC*	**472164**!
EM-105	*LAZOR*	1984
EM-108	*LAZOR*	2008
EM-130	*LAZOR*	1990
EM103	*LAZOR*	1214
EM103	*LAZOR*	1214N
EM140	*LAZOR*	1215
EM140	*LAZOR*	1215N
EM144	*LAZOR*	1216
EM144	*LAZOR*	1216N
EM153	*LAZOR*	224020
EM153	*LAZOR*	40X55X8!
ENH40859	*CUMMI*	**330385**
EO-2	*ATP*	**470460**
EO-4	*ATP*	320564
EO3	*ATP*	1167
EO3	*ATP*	710306
EO5	*ATP*	223840
EO5	*ATP*	38X58X8!
EO6	*ATP*	**473179**
EOS882	*PAARS*	**417433**=
EP46841	*VIC*	376590A
EP468411	*VIC*	370026A
EP46842	*VIC*	370036A
EP46842	*VIC*	370349A
EP46842	*VIC*	380036A
EP46847	*VIC*	370037A
EP46847	*VIC*	370338A
EP46849	*VIC*	370027A
EP47794	*VIC*	370006A
EP64236	*VIC*	386025A
EP64236	*VIC*	**416158**
EP64410-1	*VIC*	370003A
EP64410-1	*VIC*	380003A
EP64410-2	*VIC*	370003A
EP64410-2	*VIC*	380003A
EP64410-3	*VIC*	370003A
EP64414	*VIC*	370001A
EP64414-1	*VIC*	370001A
EP66	*SPG*	722108
EPS2787	*AVCO*	**471689**
EPS2788	*AVCO*	40494S
EQ20900	*LUF*	**417601**
ER90135	*EATON*	**471570**!
ER90302	*EATON*	**471442**!
ER90360	*EATON*	**471442**!
ER90676	*EATON*	**471564**
ER90839	*EATON*	**471646**!
ER90850	*EATON*	**470954**
ER91562	*EATON*	**471466**!
ER91563	*EATON*	**471570**!
ER92999	*EATON*	**470954**!
ER9531	*EATON*	**471442**!
ERJA245	*CONTI*	240698
ERJA252	*CONTI*	**350974**!
ES1008-1	*MCCOR*	9845
ES1164	*AVCO*	**412871**!
ES145	*LAZOR*	222745
ES145	*LAZOR*	27X45X8!
ES160	*LAZOR*	225005
ES160	*LAZOR*	50X62X7!
ES17687-1	*MCCOR*	TCS45472
ES289	*LAZOR*	1012
ES289	*LAZOR*	1012N
ES290	*LAZOR*	223255
ES290	*LAZOR*	32X52X7!
ES31512-1	*MCCOR*	9845
ES31902-1	*MCCOR*	TCS45725
ES31902-1	*MCCOR*	TCS45727
ES3575	*AVCO*	**472164**!
ES36173-1	*MCCOR*	**472082**
ES39499-1	*MCCOR*	332062
ES39795-1	*MCCOR*	5587
ES97610	*MCCOR*	TCS45473
ES97618	*MCCOR*	TCS45689
ES97664	*MCCOR*	TCS45633
ES97670	*MCCOR*	TCS45434
ES97698	*MCCOR*	TCS45603
ES9845	*MCCOR*	TCS45285
ES9846	*MCCOR*	17760
ES9847	*MCCOR*	17780
ES9848	*MCCOR*	17795
ET-304	*LAZOR*	227045
ETC3589	*AVCO*	240151
ETC3590	*AVCO*	6597S
EV4430	*CLARK*	**471504**!
EVH42960	*CUMMI*	**471264**
EX10770	*JAC*	**471649**!
EX10926	*JAC*	**471571**
EX1099211	*JOHND*	**476838**!
EX11241	*KINGN*	**474276**!
EX11242	*JAC*	340787
EX11469	*JAC*	**474253**!
EX11508	*JAC*	**470954**!
EX115650	*AU-LI*	**471765**!
EX11579	*JAC*	340787
EX11615	*JAC*	**471224**!
EX11616	*JAC*	**471567**!
EX11633	*JAC*	**470954**!
EX119120	*AU-LI*	**330385**!
EX12177	*JAC*	**471267**!
EX12614	*MASSE*	**472439**
EX12620	*MASSE*	**415995**!
EX12905	*JAC*	**471736**
EX13070	*JAC*	**472560N**!
EX13294	*JAC*	**471750**!
EX15453	*BENDI*	**471466**!
EX21384	*JAC*	**471766**!
EX23118B	*GMC*	7141=
EX273U	*NORDG*	**473227**!
EX27797	*ALLCH*	**480210**!
EX30827	*C-P*	340817
EX313	*OLIVE*	**471192**
EX3764	*ALLCH*	**415001**!
EX392	*OLIVE*	205035
EX4031	*KEN*	**476470**
EX4031	*KEN*	**476470**!
EX43607	*JAC*	**471737**
EX475	*LAU*	**471267**!
EX476	*LAU*	**472311**!
EX51288ND	*MASSE*	**472287**!
EX52416	*MASSE*	**416404**!
EX52717ND	*MASSE*	**450068**
EX52862ND	*MASSE*	**473225**!
EX53364ND	*MASSE*	**417484**!

! Industrial Size/Type
= The U.S. customer service number is 877-4-TIMKEN. The Canadian customer service numbers are 800-565-4927 (English) and 800-565-0438 (French-Canadian).

Mfr. No.	Name	Zero Duplication or Recommended Industrial
EX54262ND	*MASSE*	**411253**!
EX5734	*MINNM*	**481864**
EX5809	*MINNM*	**473215**!
EX5810	*MINNM*	**473464**
EX5810	*MINNM*	**473464**!
EX5868	*JAC*	**471281**!
EX6054	*JAC*	**471570**!
EX6293	*JAC*	**471103**!
EX6405	*MINNM*	**471765**!
EX6429	*MINNM*	**417316**!
EX666	*LAU*	**471539**!
EX7029	*MINNM*	**472157**
EX7029	*MINNM*	**472157**!
EX7428	*MINNM*	**417349**
EX7478	*MINNM*	**472016**
EX7587	*MINNM*	**417621**!
EX8078	*MINNM*	**415302**
EX8089	*MINNM*	**473460**
EX8360	*MINNM*	**472299**
EX8653	*MINNM*	**473010**!
EX8660	*MINNM*	450165
EX8660	*MINNM*	**471801**!
EX8664	*MINNM*	**471192**
EX9074	*MINNM*	**471570**!
EX9120	*MINNM*	**471472**!
EX9131	*MINNM*	**473205**
EX933	*CLARK*	**471730**
EX9961	*MINNM*	50209
EXE5153	*MASSE*	450398
EXE5153	*MASSE*	**471267**!
EXE5524	*MASSE*	**470954**!
EXE5525	*MASSE*	340413
EXV10292	*CASE*	**455194**
EXV11176	*CASE*	**472810**!
EXV13426	*CASE*	**415035**
EXV13426	*CASE*	**415035**!
EXV18251	*CASE*	**471766**!
EXV4417	*CASE*	**473463**
EXV5226	*CASE*	**455134**!
EXV5784	*CASE*	**471689**!
EXV5899	*CASE*	**470605**!
EXV7985	*CASE*	**472560N**!
EZ0153A0	*NOK*	224660
EZ0302E	*NOK*	376590A
EZ2199C0	*NOK*	710302
EZ2894A0	*NOK*	710293
EZ2959A0	*NOK*	223010
F-30808	*FORSH*	710413
F0283317	*IH*	**471785**!
F09Z-7B215-A	*FORD*	710388
F09Z-7B215-B	*FORD*	710389
F09Z-7B215-C	*FORD*	710441
F09Z3254A	*FORD*	**472258**
F09Z3254C	*FORD*	**472258**
F0DZ6701-A	*FORD*	710219
F0HS1190AA	*FORD*	370001A
F0HZ1190AA	*FORD*	370001A
F0HZ7048A	*FORD*	**472636**
F0HZ7052A	*FORD*	**415035**
F0HZ7052B	*FORD*	**415035**
F0JY-1S177A	*FORD*	2007N
F0JY1177A	*FORD*	2007N
F0MV14164	*FMC*	**416624**!
F0MV14165	*FMC*	**415991**
F0MV14165	*FMC*	455146!
F0TW1177AA	*FORD*	370047A
F0TZ1177A	*FORD*	370047A
F0TZ4676A	*FORD*	**473452**
F0ZC1190AA	*FORD*	9150S
F0ZZ1190A	*FORD*	9150S
F11902	*CASE*	6241S
F12546	*FAIRM*	**473215**!
F12607	*CASE*	**471649**!
F12Z6700A	*FORD*	223420
F12Z6701A	*FORD*	229005
F1625	*EATON*	3098=
F1636	*EATON*	8635S
F18133	*CASE*	**450362**
F19661	*CASE*	**473232**
F1AE6701CA	*FORD*	3909
F1AZ6700A	*FORD*	**473454**
F1AZ6701A	*FORD*	3909
F1CZ6701A	*FORD*	228250
F1CZ6701A	*FORD*	710448
F1CZ6701B	*FORD*	228250
F1HZ1175A	*FORD*	370023A
F1HZ1175C	*FORD*	370019A
F1HZ1175D	*FORD*	370021A
F1JY6700A	*FORD*	710355
F1SE6701AA	*FORD*	3909
F1SZ6701A	*FORD*	3909
F1TE-6701-A2A	*FORD*	2377
F1TE6701A1A	*FORD*	2377
F1TZ6701A	*FORD*	2377
F223	*ALLCH*	**352541**
F22582	*CASE*	**472164**!
F22670	*CASE*	**417492**
F23A20	*CARTR*	12473
F23P7H260AA	*FORD*	3622
F241543	*AVCO*	204020
F241543	*AVCO*	204505!
F256	*BUC-E*	**415047**
F263A	*PORTR*	**415023**
F282	*MINNM*	**473441**
F2940	*FAIRM*	5727
F2BZ6700A	*FORD*	223012
F2DE6701AB	*FORD*	3772
F2DZ-7F401A	*FORD*	4189H
F2DZ-7F401AVMR	*FORD*	4189H
F2HT1175AA	*FORD*	370023A
F2HZ1175A	*FORD*	370047A
F2HZ1175B	*FORD*	370023A
F2HZ1175C	*FORD*	370003A
F2R2677	*CATER*	**472185**!
F2R8416	*CATER*	**415389**=
F2TA1175AA	*FORD*	**418028**
F2TZ-1175-B	*FORD*	710413
F2TZ-1175-C	*FORD*	710414
F2TZ1175A	*FORD*	**418028**
F2TZ6701-A	*FORD*	3893V
F2VY-7A248-A	*FORD*	3404
F30715	*FORD*	**330385**!
F312R	*JOHND*	**417181**!
F320	*BUC-E*	**415995**!
F3232	*RELEE*	**471276**
F3245	*RELEE*	**470682**
F32Z-6700-D	*FORD*	2012V
F32Z1177A	*FORD*	1932
F32Z6700A	*FORD*	2012V
F32Z6700B	*FORD*	223420
F32Z6700C	*FORD*	223420
F32Z6701A	*FORD*	1019
F32Z6701B	*FORD*	229004
F37383	*CASE*	487945
F37Z6701A	*FORD*	3772
F39104	*FORD*	**471553**!
F3AE-6700-AA	*FORD*	**473454**
F3AE6701AA	*FORD*	3909
F3BZ6700A	*FORD*	223012
F3DP-7F401BA	*FORD*	4189H
F3HT1175AA	*FORD*	370023A
F3HT1175AA	*FORD*	380023A
F3HZ4676A	*FORD*	100263
F3HZ4676A	*FORD*	4562V
F3HZ6700A	*FORD*	39803
F3HZ6700B	*FORD*	39804
F3HZ6701A	*FORD*	39805
F3LP7052AA	*FORD*	4764
F3LY7052A	*FORD*	4764
F3M5589	*CATER*	**415035**
F3M6839	*CATER*	455029H=
F3M8228	*CATER*	**416476**!
F3R3-1177A	*FORD*	3622
F3RP-1177A	*FORD*	3622
F3RP-7F401-AA	*FORD*	4635
F3RP-7F401-AA	*FORD*	4635H
F3RP1177AA1	*FORD*	3622
F3RP7H260AA	*FORD*	3622
F3RZ-7F401A	*FORD*	4635
F3RZ-7F401AVMR	*FORD*	4635
F3RZ1177A	*FORD*	3622
F3SE-6700-AA	*FORD*	**350936**
F3TZ-1175-B	*FORD*	710453
F3TZ-1175-BA	*FORD*	710453
F3TZ-1175-BB	*FORD*	710453
F3TZ-7B215-A	*FORD*	710403
F3UP7052AA	*FORD*	4765
F3UZ7052A	*FORD*	4765
F3XA6700A	*FORD*	223340
F3XA6700AA	*FORD*	224052
F3XA6701BA	*FORD*	228410
F3XA7A248AA	*FORD*	224450
F3XY-7A248A	*FORD*	224450
F3XY1177A	*FORD*	710118
F3XY1177B	*FORD*	710124
F3XY6700A	*FORD*	224052
F3XY6701A	*FORD*	228410
F3XY6701B	*FORD*	228410
F3XY6K292A	*FORD*	223420
F40054	*DOMGA*	**473237**
F400S-205	*CONTI*	240385
F40120	*DOMGA*	**413246**
F40838	*CASE*	**473239**
F47504	*BRADF*	55155=
F4857	*FAIRM*	**415995**!
F4AZ-6700-A	*FORD*	**473454**
F4AZ6701A	*FORD*	3909
F4BA6700B	*FORD*	710355
F4BZ-1177B	*FORD*	2007N
F4BZ-1177B	*FORD*	710323
F4BZ-1177C	*FORD*	710323
F4BZ-1177D	*FORD*	4990
F4BZ-1177E	*FORD*	2007N
F4BZ1177A	*FORD*	1126
F4BZ12143A	*FORD*	427RR
F4BZ6700A	*FORD*	223012
F4BZ6700B	*FORD*	710355
F4BZ6701A	*FORD*	228250
F4BZ6701A	*FORD*	710448
F4HS1175BA	*FORD*	370003A
F4SZ6700A	*FORD*	**350936**
F4TZ-1177-C	*FORD*	370047A
F4TZ-1177B	*FORD*	370047A
F4TZ-6700-A	*FORD*	3894V
F4TZ-6700-A	*FORD*	5066
F4TZ-6701-B	*FORD*	2377
F4TZ-7B215A	*FORD*	4333N
F4TZ6701A	*FORD*	5723
F4TZ6701C	*FORD*	5118
F4TZ7B215B	*FORD*	4503N
F4XA-6701-AA	*FORD*	228410
F4XY6701-A	*FORD*	228410
F4ZZ-7052-A	*FORD*	710426
F5109	*FAIRM*	**415036**
F51370	*MARMO*	**416865**!
F5145	*FAIRM*	**412119**!
F5151	*FAIRM*	**473225**!
F5228	*FAIRM*	**476838**!
F5249	*RELEE*	**471138**!
F5254	*RELEE*	**471570**!
F53634	*CASE*	**471766**!
F53639	*CASE*	**470380**!
F5421	*FAIRM*	450104
F5422	*FAIRM*	**415458**!
F5609	*FAIRM*	**417073**
F5610	*FAIRM*	**417485**
F57Z-3254-AA	*FORD*	710428
F57Z-3254-BA	*FORD*	710429
F57Z4L616AA	*FORD*	714675
F5940	*CASE*	**413247**!
F5AZ-6700-A	*FORD*	**473454**
F5RZ-1177-AA	*FORD*	710443
F5RZ6700A	*FORD*	3771
F5RZ6701A	*FORD*	3772
F5TZ-1175-A	*FORD*	710430
F5TZ-6701-A	*FORD*	**473573**
F5TZ1190A	*FORD*	710430
F5TZ1190AA	*FORD*	710430
F5TZ4676A	*FORD*	4525V
F600B-223	*CONTI*	**416738**!
F600B-223	*CONTI*	450096
F600B-246	*CONTI*	**416738**!
F600B-246	*CONTI*	450096
F60185	*CASE*	**450456**!
F6024	*CASE*	**470088**
F60829	*CASE*	**473231**
F60830	*CASE*	**417433**
F64120	*FUNK*	**415960**!
F6442	*CASE*	**450523**
F65001	*FUNK*	340724!
F65002	*FUNK*	**470712**!
F65003	*FUNK*	**471192**
F65004	*FUNK*	**473228**
F65006	*FUNK*	**472179**
F65007	*FUNK*	**410308**!
F65008	*FUNK*	**472016**
F65010	*FUNK*	**411376**!
F65011	*FUNK*	**413247**!
F65013	*FUNK*	**415449**!
F65015	*FUNK*	**415995**!
F65022	*FUNK*	**471554**!
F65024	*FUNK*	**472409**!
F65025	*FUNK*	**416706**!
F65028	*FUNK*	**416404**!
F65030	*FUNK*	**470380**!
F65034	*FUNK*	**411253**!
F65035	*FUNK*	**472572**!
F65037	*FUNK*	**473459**
F65046	*FUNK*	**412861**
F65051	*FUNK*	**472164**!
F65053	*FUNK*	**471870**!
F65054	*FUNK*	450375!
F65054	*FUNK*	6936S!
F65054	*FUNK*	9845
F65060	*FUNK*	**471272**!
F65062	*FUNK*	**471271**!
F65063	*FUNK*	**417262**!
F65064	*FUNK*	**471271**!
F65066	*FUNK*	**417433**!
F65071	*FUNK*	**473179**!
F65080	*FUNK*	**412943**
F65087	*FUNK*	470950!
F65087	*FUNK*	6241S
F65095	*FUNK*	**473010**!
F65101	*FUNK*	**412119**!
F65102	*FUNK*	**416294**!
F65104	*FUNK*	**416294**!
F65105	*FUNK*	**415991**

! Industrial Size/Type

= The U.S. customer service number is 877-4-TIMKEN. The Canadian customer service numbers are 800-565-4927 (English) and 800-565-0438 (French-Canadian).

Mfr. No.	Name	Zero Duplication or Recommended Industrial
F65105	*FUNK*	455146!
F65106	*FUNK*	**417211**!
F65116	*FUNK*	**473227**!
F65117	*FUNK*	**471271**!
F65118	*FUNK*	**471984**
F65119	*FUNK*	**471466**!
F65120	*FUNK*	**415960**!
F65121	*FUNK*	**415449**!
F65123	*FUNK*	**415937**!
F65136	*FUNK*	**415294**!
F65137	*FUNK*	**415483**
F65151	*FUNK*	450313
F65154	*FUNK*	**415995**!
F65157	*FUNK*	**472492**!
F65158	*FUNK*	450313
F65159	*FUNK*	**415371**
F65181	*FUNK*	**470898**
F65184	*FUNK*	**415449**!
F65193	*FUNK*	**473212**!
F65194	*FUNK*	**472164**!
F65195	*FUNK*	**415725**!
F65196	*FUNK*	**415294**!
F65198	*FUNK*	**471442**!
F65199	*FUNK*	**416664**!
F65200	*CHALL*	**471272**!
F65200	*FUNK*	**471272**!
F65204	*FUNK*	**417262**=
F65205	*FUNK*	**472394**
F65207	*FUNK*	**415379**!
F65207	*FUNK*	**415379**
F65208	*FUNK*	**455019**!
F65209	*FUNK*	**472164**!
F65214	*FUNK*	**473244**!
F65215	*FUNK*	**415937**!
F65216	*FUNK*	**415389**
F65217	*FUNK*	**473444**
F65218	*FUNK*	**415234**!
F65227	*FUNK*	**471466**!
F65228	*FUNK*	**471504**
F65229	*FUNK*	**471272**!
F65235	*FUNK*	**470625**!
F65240	*FUNK*	**455019**!
F65246	*FUNK*	**476470**
F65708	*CASE*	**415379**!
F65708	*CASE*	**415379**
F65P-7052AA	*FORD*	4765
F65W-3N134-AA	*FORD*	3604
F65Z-3N134-AA	*FORD*	3604
F6647	*FAIRM*	**472439**
F673	*FAIRM*	**470334**!
F6731	*FAIRM*	**470334**!
F67Z-1177AA	*FORD*	8660S
F67Z-1177AC	*FORD*	8660S
F6DZ-6700-AA	*FORD*	710444
F6HS1190AA	*FORD*	370001A
F6TP-7052-AA	*FORD*	4981V
F6TZ-7052A	*FORD*	7300S
F6UZ-7052AMR	*FORD*	4765
F6UZ7052A	*FORD*	4765
F6XA-6700AA	*FORD*	224052
F6XZ6700AA	*FORD*	224052
F6XZ6701BA	*FORD*	228410
F6ZZ-7052-A	*FORD*	710431
F7023	*CASE*	240414
F7150	*CASE*	5976S
F7213	*CASE*	**450984**
F724	*MINNM*	**470712**!
F7312	*CASE*	**450984**
F75W-1177BA	*FORD*	100357
F75Z-1177BA	*FORD*	100357
F75Z-1S177BA	*FORD*	100357
F7617	*FAIRM*	**473232**

Mfr. No.	Name	Zero Duplication or Recommended Industrial
F77Z-7052AA	*FORD*	2655
F77Z6701BA	*FORD*	**473573**
F7819	*FAIRM*	**415988**
F7AP7052AA	*FORD*	4764
F7AZ-7052A	*FORD*	4764
F7CZ-7052AA	*FORD*	1990
F7TZ1175AA	*FORD*	**415960**
F7UZ-1175A	*FORD*	9864S
F7UZ-1177A	*FORD*	710067
F7ZZ-6701BA	*FORD*	**473573**
F8085	*CASE*	340823
F81A-1175AA	*FORD*	710454
F81A1175EA	*FORD*	**415958**
F81A1175EA	*FORD*	**417505**
F81A1175HA	*FORD*	710413
F81P-7052AA	*FORD*	100086
F81P-7052AB	*FORD*	100086
F81Z-1175AA	*FORD*	710454
F81Z-1175GA	*FORD*	9864S
F81Z-1S175AA	*FORD*	710454
F81Z-7052AA	*FORD*	100086
F81Z1175HA	*FORD*	710413
F82958	*CASE*	5576
F87A-1N049AA	*FORD*	710519
F87Z-1190AA	*FORD*	710519
F8987	*FAIRM*	**473445**
F89W4676AA	*FORD*	3604
F89Z4676AA	*FORD*	3604
F8UZ-4676AA	*FORD*	719316
F9052	*FAIRM*	**474281**!
F9743	*CASE*	**471192**
F9744	*CASE*	**417344**!
F9802	*CASE*	**415035**
FA11	*LK-BT*	55028
FA6534	*PORTR*	**411245**!
FAA12476A	*FORD*	240470
FAA12476B	*FORD*	240470
FAB12143A	*FORD*	421
FB12571	*CASE*	**455019**!
FB13736	*CASE*	**472439**
FD1084	*FABCO*	**472193**!
FD1405	*FABCO*	**470334**!
FD1779	*GUY*	**472179**
FD182	*NAPD*	**471344**
FD192	*NAPD*	6936S
FD236	*FABCO*	**473461**!
FD256	*FABCO*	**415027**
FD31	*FABCO*	450111
FD323	*FABCO*	**471272**!
FD370	*FABCO*	5965
FD372	*FABCO*	5965
FD3792	*CASE*	204017
FD391	*FABCO*	**473239**
FD87	*FABCO*	**472185**!
FD88	*FABCO*	**473442**!
FF1118	*FULLE*	**472394**
FG0616	*MO-CH*	**471684**!
FG0617	*MO-CH*	**473203**
FG0624	*MO-CH*	**415082**
FGO611	*MO-CH*	**471730**
FGO616	*MO-CH*	**471684**!
FGO635	*MO-CH*	**416267**!
FH3022207	*EL-MO*	J1111
FH3022208	*EL-MO*	J1121
FH3022209	*EL-MO*	J1109
FH3022302	*EL-MO*	**471267**!
FH3022307	*EL-MO*	**471272**!
FH3022313	*EL-MO*	**416404**!
FH757153	*CASE*	**471766**!
FHO44594	*CASE*	**472193**!
FJO5301	*MASSE*	**417082**
FM3	*FMC*	**416892**!

Mfr. No.	Name	Zero Duplication or Recommended Industrial
FM302	*GILSN*	200354
FM508	*IG-RA*	**471192**
FO-124	*ATP*	2658
FO-191	*ATP*	3404
FO103	*ATP*	**412473**!
FO122	*ATP*	2655
FO123	*ATP*	2658
FO182	*ATP*	**473473**
FO185	*ATP*	**470687**
FO2	*ATP*	**473459**
FO29	*ATP*	**410308**!
FO5	*ATP*	**473234**!
FOMV14164	*FMC*	**416624**!
FOMV14165	*FMC*	**415991**
FOMV14165	*FMC*	455146!
FS2753	*EL-WH*	205004
FS42159U	*NORDG*	**471649**!
FS50601U	*NORDG*	**471192**
FS50711	*NORDG*	**470712**!
FS50711U	*NORDG*	**470712**!
FS60278U	*NORDG*	**472354**!
FS60279U	*NORDG*	**473231**!
FS9687	*EL-WH*	6590S
FSK18537	*IH*	**412119**!
FSK21639	*IH*	**473474**
FT2105	*MINNM*	**415035**
FT2105	*MINNM*	**415035**!
FT2213	*MINNM*	**472636**!
FT2230	*MINNM*	**472409**!
FT2402	*MINNM*	**472287**!
FT2412	*MINNM*	**471649**!
FT3332	*MINNM*	**472409**!
FT3339	*MINNM*	**415302**
FT606	*MINNM*	**473463**
FT650	*MINNM*	55028
FT650	*WHITE*	55028
FW189602	*SPERY*	**472015**=
FW593112	*SPERY*	**471271**!
FX-09	*COC*	**472144**!
FXS30	*COC*	**455079**!
FXS39	*COC*	**473448**!
G-0253359	*IH*	**415458**!
G00505126	*FWD*	**415984**!
G00505135	*FWD*	**470334**!
G0S672	*PAARS*	**472012**
G10005	*CASE*	**412473**!
G10346	*CASE*	**416706**!
G10421	*CASE*	**473425**
G10422	*CASE*	**471821**!
G105118	*CASE*	**470954**!
G10561	*CASE*	**415991**
G10561	*CASE*	455146!
G10651	*CASE*	**415991**
G10651	*CASE*	455146!
G10689	*CASE*	**471341**!
G13053	*CASE*	204079=
G13112	*CASE*	**472810**!
G13800	*CASE*	6590S
G13801	*CASE*	**471138**!
G13802	*CASE*	**471192**
G13803	*CASE*	**473215**!
G13804	*CASE*	204084=
G13805	*CASE*	**471267**!
G13807	*CASE*	**471267**!
G13810	*CASE*	**415962**
G13811	*CASE*	**415035**
G13811	*CASE*	**415035**!
G13813	*CASE*	**471271**!
G13814	*CASE*	**473197**
G13815	*CASE*	340771
G13816	*CASE*	450129
G13816	*CASE*	**472826**!

Mfr. No.	Name	Zero Duplication or Recommended Industrial
G13817	*CASE*	450285
G13818	*CASE*	**471224**!
G13819	*CASE*	**353120**
G13821	*CASE*	**471827**!
G13822	*CASE*	**415962**
G13824	*CASE*	**415035**
G13825	*CASE*	**412473**!
G13827	*CASE*	**470954**!
G157-B208	*CONTI*	**412473**!
G157B203	*CONTI*	**412473**=
G157S202	*CONTI*	**471442**!
G1710	*HU-WR*	**416921**!
G20147	*DOMGA*	332062
G20189	*DOMGA*	3945
G273	*PORTR*	**416892**!
G274	*PORTR*	**415025**
G297	*TW-CO*	**471733**
G3001	*SPG*	730033
G3002	*SPG*	730021
G3003	*SPG*	730020
G3005	*SPG*	730007
G3006	*SPG*	730018
G3008	*SPG*	730005
G3009	*SPG*	730013
G3011	*SPG*	730022
G3012	*SPG*	730026
G3013	*SPG*	730002
G3014	*SPG*	730028
G3016	*SPG*	730035
G3019	*SPG*	730009
G3022	*SPG*	730023
G3023	*SPG*	730010
G3024	*SPG*	730004
G3025	*SPG*	730003
G3028	*SPG*	730001
G3031	*SPG*	730019
G3034	*SPG*	730027
G3035	*SPG*	730011
G3037	*SPG*	730031
G3039	*SPG*	730034
G3040	*SPG*	730008
G3041	*SPG*	730016
G3042	*SPG*	730014
G3044	*SPG*	730017
G3045	*SPG*	730012
G3046	*SPG*	730006
G3053	*SPG*	730032
G3056	*SPG*	730030
G3060	*SPG*	730024
G3066	*SPG*	730025
G3067	*SPG*	733067
G3078	*SPG*	730029
G3237CAR	*SPG*	8660S
G3873CA	*SPG*	3873
G3873CAR	*SPG*	8695S
G3983CA	*SPG*	3983
G4019RX	*SPG*	4019N
G40HB122	*BRADF*	**471633**!
G4696SAR	*SPG*	710067
G4855S	*SPG*	710105
G4855SAR	*SPG*	710105
G527	*HU-WR*	**415995**!
G529	*HU-WR*	**415001**!
G6665E	*JOHND*	340136
G923	*HU-WR*	**476470**
G9569CAR	*SPG*	9569S
GAF6924B	*DURA*	**471984**
GAU4381	*FORD*	**455005**
GB11512	*HWY*	**472492**!
GB350	*EMSCO*	**415124**
GB45587	*FORD*	**471224**!
GB8	*GOODM*	311189

! Industrial Size/Type
= The U.S. customer service number is 877-4-TIMKEN. The Canadian customer service numbers are 800-565-4927 (English) and 800-565-0438 (French-Canadian).

Mfr. No.	Name	Zero Duplication or Recommended Industrial
GC1115	*MACK*	**417433**=
GC500	*EMSCO*	**416865**!
GD193-B306	*CONTI*	335821H=
GD193-B306B	*CONTI*	335821H=
GD193-B306C	*CONTI*	335821H=
GE1142	*ALLCH*	**471766**!
GE1143	*ALLCH*	**471735**
GEL3344	*WHITE*	417267
GG-335-32152	*JOHND*	**472394**
GG33521109	*JOHND*	**473225**!
GG33530797	*JOHND*	**473215**!
GG33531190	*JOHND*	**471138**!
GG33532185	*JOHND*	**472015**!
GGAHH103	*SPICE*	712000
GGAHH106	*DANA*	714512
GGAHH109	*DANA*	**415088**
GJ1902F0	*NOK*	32X52X7!
GK2250	*MASSE*	**471554**!
GK3113	*MASSE*	**472234**
GL1113	*MASSE*	**410308**!
GL1172	*MASSE*	**472924**!
GM28	*LK-BT*	**472029**
GMR46	*ALLCH*	**415041**
GMR64	*ALLCH*	**411253**!
GO1012	*CLEVI*	BS+CS+HS7603S
GO1013	*CLEVI*	BS+CS+HS7603S-1
GO1A	*ATP*	451117N=
GOO65930	*FWD*	**417344**!
GOS633	*PAARS*	**476470**
GP1177	*FORD*	40566S
GP3031	*FORD*	**471413**
GP3034	*FORD*	40576S
GP7770A	*FORD*	**473229**
GP7798	*FORD*	**471466**!
GPA1177	*FORD*	**471835**!
GPA7262	*FORD*	**411394**!
GPW3591	*FORD*	353132
GPW6701	*FORD*	5585$
GPW6702	*FORD*	5585$
GR2001	*MASSE*	**472636**!
GS1000	*GUARA*	**473317**
GS1001	*GUARA*	41257!
GS1002	*GUARA*	7934S
GS1003	*GUARA*	8705S
GS1004	*GUARA*	4148
GS1004	*GUARA*	**471424**!
GS1004	*GUARA*	9406S
GS1005	*GUARA*	331301N
GS1005	*GUARA*	9015S
GS1006	*GUARA*	8121S
GS1007	*GUARA*	6815
GS1008	*GUARA*	8871
GS1009	*GUARA*	5121
GS1010	*GUARA*	3087
GS1011	*GUARA*	6840S
GS1012	*GUARA*	224045
GS1012	*GUARA*	40X62X12!
GS1014	*GUARA*	1165
GS1015	*GUARA*	1209
GS1016	*GUARA*	1165
GS1016	*GUARA*	1217
GS1017	*GUARA*	1195
GS1018	*GUARA*	224015
GS1019	*GUARA*	225020
GS1019	*GUARA*	50X68X8!
GS1020	*GUARA*	55X82X12!
GS1021	*GUARA*	1950
GS1021	*GUARA*	224820
GS1021	*GUARA*	48X62X8!
GS1023	*GUARA*	1183
GS1024	*GUARA*	1977
GS1025	*GUARA*	1188
GS1026	*GUARA*	1174
GS1026	*GUARA*	1188
GS1026	*GUARA*	38X52X8.5!
GS1029	*GUARA*	6840S
GS1033	*GUARA*	3357
GS1034	*GUARA*	7994S
GS1038	*GUARA*	7607
GS1042	*GUARA*	291295
GS1044	*GUARA*	5699
GS1046	*GUARA*	9150S
GS1047	*GUARA*	2043
GS1051	*GUARA*	4148
GS1052	*GUARA*	5113
GS1052	*GUARA*	7721!
GS1053	*GUARA*	9762S
GS1054	*GUARA*	8139
GS1056	*GUARA*	6954S
GS1061	*GUARA*	8974S
GS1063	*GUARA*	493291
GS1066	*GUARA*	493637
GS1068	*GUARA*	5109
GS1070	*GUARA*	442380
GS1070	*GUARA*	**471271**!
GS1071	*GUARA*	4250
GS1073	*GUARA*	**416273**!
GS1074	*GUARA*	5123
GS1076	*GUARA*	**413248**
GS1078	*GUARA*	**415960**
GS1080	*GUARA*	**411348**!
GS1084	*GUARA*	1192
GS1088	*GUARA*	1949
GS1089	*GUARA*	1992
GS1091	*GUARA*	1209
GS1095	*GUARA*	1012
GS1095	*GUARA*	1012N
GS1101	*GUARA*	1174
GS1101	*GUARA*	38X52X8.5!
GS1107	*GUARA*	1973
GS1107	*GUARA*	48X65X10!
GS1108	*GUARA*	1128
GS1109	*GUARA*	227040
GS1109	*GUARA*	70X90X10!
GS1112	*GUARA*	224820
GS1112	*GUARA*	48X62X8!
GS1113	*GUARA*	1110
GS1114	*GUARA*	**1213N**
GS1115	*GUARA*	482126
GS1118	*GUARA*	1174
GS1118	*GUARA*	38X52X8.5!
GS1120	*GUARA*	1952
GS1121	*GUARA*	1012
GS1121	*GUARA*	1012N
GS1123	*GUARA*	1174
GS1123	*GUARA*	38X52X8.5!
GS1125	*GUARA*	**473230**!
GS1132	*GUARA*	1196
GS1133	*GUARA*	**471737**
GS1134	*GUARA*	483793
GS1138	*GUARA*	1209
GS1145	*GUARA*	2002
GS1146	*GUARA*	1985
GS1147	*GUARA*	1986
GS1159	*GUARA*	224045
GS1159	*GUARA*	40X62X12!
GS1161	*GUARA*	442874
GS1168	*GUARA*	203006!
GS1170	*GUARA*	7780
GS1171	*GUARA*	8243
GS1173	*GUARA*	**480630**!
GS1174	*GUARA*	370023A
GS1178	*GUARA*	1992
GS1181	*GUARA*	5756
GS1182	*GUARA*	**415960**
GS1183	*GUARA*	3210
GS1184	*GUARA*	1165
GS1187	*GUARA*	370046A
GS1190	*GUARA*	**471224**!
GS1194	*GUARA*	**472560N**
GS1198	*GUARA*	204017
GS1201	*GUARA*	**473235**
GS1202	*GUARA*	40494S
GS1202	*GUARA*	**472164**
GS1203	*GUARA*	**472164**!
GS1204	*GUARA*	**472179**
GS1205	*GUARA*	6781
GS1206	*GUARA*	203006!
GS1207	*GUARA*	44053
GS1211	*GUARA*	**473450**!
GS1213	*GUARA*	1949
GS1214	*GUARA*	**472475**
GS1214	*GUARA*	6064
GS1215	*GUARA*	203034
GS1218	*GUARA*	**470712**!
GS1220	*GUARA*	1012
GS1220	*GUARA*	1012N
GS1220	*GUARA*	1960
GS1220	*GUARA*	45X62X8!
GS1221	*GUARA*	**471785**!
GS1222	*GUARA*	**451182**
GS1226	*GUARA*	8139
GS1229	*GUARA*	5756
GS1230	*GUARA*	40566S
GS1231	*GUARA*	8430S
GS1233	*GUARA*	**473473**
GS1234	*GUARA*	40316S
GS1236	*GUARA*	442874
GS1237	*GUARA*	2669
GS1238	*GUARA*	353135
GS1238	*GUARA*	**474278**
GS1238	*GUARA*	6859S
GS1239	*GUARA*	3199
GS1240	*GUARA*	**410496**!
GS1241	*GUARA*	**416273**!
GS1242	*GUARA*	**471787**
GS1246	*GUARA*	1012
GS1246	*GUARA*	1012N
GS1249	*GUARA*	8293S
GS1250	*GUARA*	**416865**!
GS1251	*GUARA*	3348
GS1253	*GUARA*	**484054**!
GS1253	*GUARA*	6370N
GS1255	*GUARA*	**484058**
GS1256	*GUARA*	9161
GS1257	*GUARA*	473812
GS1258	*GUARA*	8594S
GS1259	*GUARA*	8133S
GS1260	*GUARA*	8549S
GS1261	*GUARA*	51322
GS1262	*GUARA*	9569S
GS1263	*GUARA*	42763
GS1264	*GUARA*	9568
GS1265	*GUARA*	7687S
GS1267	*GUARA*	7245
GS1268	*GUARA*	**471835**!
GS1269	*GUARA*	**450776**!
GS1270	*GUARA*	**470898**
GS1272	*GUARA*	1974
GS1273	*GUARA*	9344S
GS1274	*GUARA*	8676S
GS1274	*GUARA*	9912
GS1275	*GUARA*	3214
GS1276	*GUARA*	8660S
GS1277	*GUARA*	**415447**
GS1279	*GUARA*	9116S
GS1281	*GUARA*	**3395**!
GS1282	*GUARA*	6966S
GS1283	*GUARA*	**471862**
GS1286	*GUARA*	8597S
GS1287	*GUARA*	9363S
GS1288	*GUARA*	470059
GS1288	*GUARA*	**470380**!
GS1289	*GUARA*	7886S
GS1290	*GUARA*	**473228**
GS1291	*GUARA*	**470487**!
GS1292	*GUARA*	470059
GS1292	*GUARA*	**470380**!
GS1293	*GUARA*	8940S
GS1294	*GUARA*	**415995**!
GS1295	*GUARA*	8695S
GS1296	*GUARA*	**471821**!
GS1297	*GUARA*	**450143**
GS1298	*GUARA*	224015
GS1301	*GUARA*	8835S
GS1302	*GUARA*	40286
GS1306	*GUARA*	224270
GS1306	*GUARA*	42X72X10!
GS1307	*GUARA*	**473234**!
GS1310	*GUARA*	9178S
GS1312	*GUARA*	9911S
GS1315	*GUARA*	1012
GS1315	*GUARA*	1012N
GS1318	*GUARA*	**472747**
GS1319	*GUARA*	5458
GS1320	*GUARA*	340823
GS1321	*GUARA*	**473179**
GS1322	*GUARA*	3604
GS1322	*GUARA*	**414045**!
GS1323	*GUARA*	2689S
GS1324	*GUARA*	9912
GS1325	*GUARA*	3195
GS1327	*GUARA*	9049
GS1327	*GUARA*	9049N
GS1328	*GUARA*	8704S
GS1330	*GUARA*	**472144**!
GS1332	*GUARA*	5113
GS1333	*GUARA*	**472492**!
GS1334	*GUARA*	6465
GS1338	*GUARA*	6077
GS1341	*GUARA*	6090S
GS1346	*GUARA*	**412119**!
GS1347	*GUARA*	**412119**!
GS1348	*GUARA*	**410987**!
GS1348	*GUARA*	450686
GS1349	*GUARA*	**416271**!
GS1350	*GUARA*	**410825**
GS1351	*GUARA*	**417480**!
GS1353	*GUARA*	5957S
GS1354	*GUARA*	**415458**!
GS1356	*GUARA*	**455008**
GS1357	*GUARA*	2222
GS1359	*GUARA*	**415960**!
GS1359	*GUARA*	**415960**
GS1360	*GUARA*	2081
GS1361	*GUARA*	9864S
GS1362	*GUARA*	**417158**!
GS1363	*GUARA*	**417158**!
GS1363	*GUARA*	9864S
GS1364	*GUARA*	**417487**
GS1365	*GUARA*	3385
GS1366	*GUARA*	6358
GS1368	*GUARA*	**416292**
GS1369	*GUARA*	**415085**!
GS1369	*GUARA*	456648
GS1370	*GUARA*	**415437**
GS1370	*GUARA*	**415437**!
GS1371	*GUARA*	370033A

! Industrial Size/Type $ F-M Number Is Part Of A Kit
= The U.S. customer service number is 877-4-TIMKEN. The Canadian customer service numbers are 800-565-4927 (English) and 800-565-0438 (French-Canadian).

Mfr. No.	Name	Zero Duplication or Recommended Industrial
GS1372	GUARA	**415958**
GS1372	GUARA	**415958**!
GS1373	GUARA	456618
GS1374	GUARA	**417505**
GS1376	GUARA	**473238**!
GS1379	GUARA	223535
GS1381	GUARA	1174
GS1381	GUARA	38X52X8.5!
GS1382	GUARA	2000
GS1382	GUARA	224235
GS1382	GUARA	42X58X7!
GS1383	GUARA	1188
GS1384	GUARA	1977
GS1386	GUARA	1181
GS1386	GUARA	41X56X7!
GS1387	GUARA	1180
GS1387	GUARA	41X55X7!
GS1388	GUARA	1174
GS1388	GUARA	38X52X8.5!
GS1391	GUARA	1174
GS1391	GUARA	38X52X8.5!
GS1393	GUARA	1974
GS1394	GUARA	1994
GS1394	GUARA	48X70X9!
GS1395	GUARA	1214
GS1395	GUARA	1214N
GS1397	GUARA	1208
GS1397	GUARA	48X72X7!
GS1398	GUARA	1969
GS1398	GUARA	48X63X9!
GS1399	GUARA	8429S
GS1400	GUARA	7686S
GS1403	GUARA	**473234**!
GS1403	GUARA	**473241**
GS1407	GUARA	**450666**
GS1408	GUARA	5573
GS1409	GUARA	6241S
GS1414	GUARA	**417485**
GS1415	GUARA	5965
GS1416	GUARA	**415857**!
GS1417	GUARA	40185
GS1418	GUARA	**451948**
GS1419	GUARA	**473214**
GS1420	GUARA	1188
GS1422	GUARA	6960
GS1423	GUARA	205015
GS1427	GUARA	**473258**!
GS1429	GUARA	5131
GS1434	GUARA	6960
GS1435	GUARA	**471192**
GS1482	GUARA	5699
GSE461	ALLCH	**415001**!
GTB5398	FORD	**471141**!
GTB7269	FORD	**450593**!
GTB7274	FORD	**473215**!
GTN079	RFT	713058
GTN082	RFT	713127
GTN109	RFT	713025
GTN110	RFT	713059
GTN122	RFT	713070
GTN155	RFT	713073
GTP501	RFT	713030
GTP506	RFT	713002
GTP523	RFT	713029
GTP527	RFT	713035
GTP528	RFT	713044
GTP537	RFT	713135
GTV0035	RFT	713074
GTV004	RFT	713153
GTV005	RFT	713151
GTV015	RFT	713007
GTV017	RFT	713113
GTV018	RFT	713034
GTV019	RFT	713155
GTV906	RFT	713040
GTV907	RFT	713003
GTV908	RFT	713043
GTV913	RFT	713046
GTV917	RFT	713057
GTV919	RFT	713064
GTV923	RFT	713132
GTV925	RFT	713134
GTV928	RFT	713076
GTV936	RFT	713024
GTV939	RFT	713031
GTV940	RFT	713063
GTV941	RFT	713054
GTV943	RFT	713095
GTV945	RFT	713036
GTV946	RFT	713015
GTV947	RFT	713079
GTV949	RFT	713100
GTV951	RFT	713018
GTV952	RFT	713138
GTV953	RFT	713128
GTV956	RFT	713123
GTV960	RFT	713012
GTV961	RFT	713017
GTV962	RFT	713023
GTV966	RFT	713111
GTV967	RFT	713097
GTV968	RFT	713062
GTV969	RFT	713053
GTV970	RFT	713050
GTV972	RFT	713045
GTV980	RFT	713026
GTV987	RFT	713001
GTV998	RFT	713069
GTV999	RFT	713049
GW24014406	TROS	**473235**
GX1538	MASSE	450165
GX1538	MASSE	**471801**!
GY2006W	JOHND	**470625**!
H-9-K226	CONTI	**471553**!
H1005	DURA	**471442**!
H1028813	CUMMI	**470712**!
H1028821	CUMMI	**471570**!
H103666	CUMMI	**473016**!
H1110	OLIVE	**472636**!
H11773	ALLCH	**471567**!
H1240	MARMO	**473231**
H12477	GMC	**473227**
H12478	GMC	240319
H1251442	LEROI	**455151**
H1251443	LEROI	450054
H1251444	LEROI	**471821**!
H1251446	LEROI	473435
H1251447	LEROI	50199S!
H1251447	LEROI	6863S!
H125206	LEROI	**472924**!
H125208	LEROI	**455151**
H125209	LEROI	**481073**
H125210	LEROI	**471821**!
H125212	LEROI	**450039**
H137	IRON	**474281**!
H1443	OLIVE	**470530**!
H1443	WHITE	**470530**!
H153F	GN-TI	**471750**!
H154	MINNM	**473243**
H1582	OLIVE	**472185**!
H165	AM BR	**450040**
H1898	SPG	RD295
H193	GN-TI	6283S
H2090	SPG	RD296
H2110	SPG	RD411
H2111	SPG	RD282
H22981	JA-HE	**471532**
H2319A	GMC	**473010**!
H25051	JOHND	**472354**!
H2586B	JOHND	**481163**!
H26033065	VILA	1207
H26033065	VILA	1207N
H275	OLIVE	50199S!
H275	OLIVE	6863S!
H281	FABCO	**415302**
H282	FABCO	**473444**
H311	TLSMI	**471192**
H3110	TLSMI	**415458**!
H31101	LEROI	**450446**
H31103	TLSMI	**455584**
H31104	TLSMI	**455576**!
H31107	TLSMI	**474278**
H31124	TLSMI	**416888**!
H31129	TLSMI	415317
H31131	TLSMI	**415035**
H31138	TLSMI	9568
H312	TLSMI	**471821**!
H3120	TLSMI	**416167**!
H3121	TLSMI	**415351**!
H313	TLSMI	**472029**
H313249	AMC	**415995**!
H31354	VIC	72665
H3139	TLSMI	**417211**!
H3143	TLSMI	**415995**!
H3148	TLSMI	**415035**
H3148	TLSMI	**415035**!
H315	TLSMI	**415991**
H315	TLSMI	455146!
H3150	TLSMI	**410496**!
H3154	TLSMI	**417254**
H3155	TLSMI	**417554**!
H3157	TLSMI	**417546**!
H3158	TLSMI	**415991**
H3158	TLSMI	455146!
H318	TLSMI	**472560N**!
H3193	TLSMI	**415995**!
H3199	TLSMI	6513
H324394	AMC	**471649**!
H324395	AMC	**471652**
H336842	CASE	**471413**!
H428839	CASE	416556!
H428839	CASE	**472157**
H441	PORTR	**417601**
H441	TEXAS	**417601**
H442	PORTR	**55301S**
H442	TEXAS	**55301S**
H4622S	CASE	**472144**!
H5035	KRSE	340900
H50490	KRSE	**417343**!
H504951	VIC	J1110=
H505055	VIC	J1112
H51240	MARMO	**410308**!
H54879	ITM	2007N
H553	PORTR	**416891**!
H55935	ITM	227410
H59039	ITM	**473367**
H604637	SPICE	**415995**!
H620A	HOUGH	**415449**!
H620A	OLIVE	**450593**!
H687	PORTR	**417273**
H693	OLIVE	**471141**!
H706	PORTR	**455330**!
H706	TEXAS	**455330**!
H70792	GAL	**470898**
H749085	CASE	200339!
H75-HER12010	HERCU	**412119**
H75296	JOHND	**471808**!
H85305	GAL	**471271**!
H861	PORTR	**415991**
H861	PORTR	455146!
H94951	JOHND	JV1897=
HA1198	HOUGH	**471689**!
HA1199	HOUGH	**473215**!
HA1213	HOUGH	**471795**
HA1217	HOUGH	**471689**!
HA1405	HOUGH	**474278**
HA396	HOUGH	**411394**!
HA775	HOUGH	**415027**
HA775	HOUGH	**415027**!
HA889	HOUGH	**415995**!
HB14262	EMSCO	50514
HB19009	EMSCO	**415072**
HB19069	EMSCO	**415124**
HC1266	LETN	**415045**!
HC1411	LETN	**417344**!
HC2071	LETN	**473245**!
HC32842	LETN	**418028**
HC32842	LETN	455137!
HC3908	LETN	**415043**
HC4003	SPG	HU003A
HC4005	SPG	HU005A
HC4007	SPG	HU007A
HC4008	SPG	HU008A
HC4014	SPG	HU014A
HC4044	SPG	HU044A
HC4065	NATL	HU065A
HC4075	SPG	H075
HC527	LETN	**415035**
HC544	LETN	**412473**!
HC7497	LETN	**417563**
HCF12312	AU-WS	**470954**!
HCF12314	B-L-H	**471224**!
HCF12315	B-L-H	**415234**!
HCF12316	B-L-H	**412040**
HCF12316	CLARK	**412040**
HCF12317	B-L-H	**415449**!
HCF12317	CLARK	**415449**!
HCF12318	B-L-H	**472572**!
HCF12318	CLARK	**472572**!
HCF12319	B-L-H	**415294**!
HCF12319	CLARK	**415294**!
HCF13182	AU-WS	**415072**
HCF244	AU-WS	**472636**!
HCF279	AU-WS	55030
HCF280	AU-WS	**412473**!
HCF281	AU-WS	**415449**!
HCF3129	AU-WS	**471224**!
HCF3129A	AU-WS	**471224**!
HCF5091A	AU-WS	**417538**
HCF5097	AU-WS	**471270**!
HCF5098A	AU-WS	**473227**
HCT186	FMC	**417316**!
HD1022	LETN	**471141**!
HD1107	LETN	**455134**
HD2620	LETN	**417344**!
HD4135	LETN	**450911N**!
HD41352	LETN	**450911N**!
HD4136	LETN	**455134**
HD4272	LETN	**415645**!
HD4272	LETN	455104
HD4488	LETN	**455134**
HD44881	LETN	**455134**!
HD44882	LETN	**455134**!
HD4496	LETN	**417172**
HD4565	LETN	**415138**!
HD4674	LETN	**416107**!
HD4674	LETN	455073
HD5454	LETN	**415035**

! Industrial Size/Type
= The U.S. customer service number is 877-4-TIMKEN. The Canadian customer service numbers are 800-565-4927 (English) and 800-565-0438 (French-Canadian).

Mfr. No.	Name	Zero Duplication or Recommended Industrial
HD5586	LETN	**417563**
HD6845	LETN	**417563**
HD68451	LETN	**417563**
HD684512	WABCO	**417563**
HD684513	WABCO	**417563**
HD68452	LETN	**417563**
HD68453	LETN	**417563**
HD68455	LETN	**417563**
HD68456	LETN	**417563**
HD68457	LETN	**417563**
HD684813	WABCO	**417563**
HE11072	LETN	**455134**
HE11074	LETN	**455134**
HG483	WITTE	**472012**
HG723	LETN	455734=
HG7233	LETN	455734=
HH00031043	TLSMI	**415995**!
HK7010	LETN	417548
HL1305	LETN	**417570**
HL153	GN-TI	441319
HL16	HOLT	**481163**!
HLX295	MASSE	240151
HM371	LK-BT	**482253**
HM377	LK-BT	**415023**
HM59	LK-BT	**415001**!
HO1092	LETN	**415379**=
HO8	ATP	7300S
HO9	ATP	7692S
HS282	HOUGH	**473243**
HS4537AH-1	CHRYS	**415371**
HS925	HOUGH	**474278**
HU0464	SPG	HU110A
HWF009C	SPG	HWF009A
HX43662	JOHND	**471255**!
HX44879	JOHND	**471529**
HY5A	HOLT	6701=
HY694	HU-WR	417267
HY704	HU-WR	**471472**!
HYD-2-A6	FAIRB	**470625**!
HYD-2-A7	FAIRB	**417316**!
ID306	IDECO	**416229**
ID30927	IDEAL	35127
ID30994	IDEAL	35094
IE3648	DENCO	**473454**
IN3216	CATER	5634
ISK76884	IH	**416167**!
IX223	GRAY	**471255**!
IXE446	GRAY	**472439**
J-0081	JEFF	**473461**!
J0719273	AMC	223005
J0719273	CHRYS	223005
J0719273	RENAU	223005
J0719274	AMC	225020
J0719274	CHRYS	225020
J0719274	RENAU	225020
J0742021	RENAU	222267
J0743161	RENAU	228010
J0853373	CHRYS	229005
J0854842	RENAU	1172
J0854852	RENAU	1172
J0859691	RENAU	3771
J0938031	AMC	482267
J0998092	CHRYS	5778
J10544	JOHND	**471570**!
J10544H	JOHND	**471570**!
J11692	JOHND	**470954**
J1190	SPG	JX1190
J13672	JOHND	40169S
J15506	JOHND	**471224**
J15506HN	JOHND	**471224**
J15881	JOHND	**473228**
J17706I	CINMI	**471192**
J2445	SPG	5370
J2529	SPG	J2529
J2608	SPG	J2608
J3170700	AMC	7687S
J3208474	AMC	**473452**
J3238137	AMC	3942
J32400086	CHRYS	9912
J3240086	CHRYS	9912
J3241669	AMC	3698
J4103	GMC	**472560N**!
J4486140	AMC	313842
J501389	CHRYS	4370N
J51163	FULLE	**471787**!
J51163	MARMO	**471787**!
J51163	SPICE	**471787**!
J51291	FULLE	**471192**
J51291	MARMO	**471192**
J51296	FULLE	**415458**!
J51296	MARMO	**415458**!
J51297	FULLE	**472572**!
J51299	FULLE	**472572**!
J51299	MARMO	**472572**!
J5349457	AMC	710928
J5356675	AMC	442874
J5359457	AMC	3173
J5365082	AMC	3945
J6816980	CHRYS	224253
J6X176	CATER	**455079**=
J802820	CASE	907104
J8121397	AMC	722108
J8121399	WILYS	**472397**!
J8121781	AMC	710068
J8124630	AMC	5131
J8124881	AMC	3638
J8124893	AMC	9613S
J8125718	AMC	3638
J8127350	AMC	722109
J8127391	AMC	3638
J8128013	AMC	2443
J8128016	AMC	222820
J8128016	AMC	28X40X7!
J8129096	AMC	5131
J8130762	AMC	**471737**
J8130762	CHRYS	**471737**
J8130808	AMC	**472572**
J8130810	AMC	**472572**
J8130870	AMC	3173
J8130870	AMC	710928
J8130982	AMC	341022
J8131669	AMC	711552
J8131674	AMC	**471466**
J8132672	AMC	**472439**
J8132779	AMC	7412S
J8132822	AMC	483793
J8132957	AMC	**473442**!
J8133528	AMC	3638
J8133643	AMC	341022
J8134216	AMC	**472319**
J8134446	AMC	710046
J8134478	AMC	3173
J8134478	AMC	710928
J8134568	AMC	PSK-1
J8134587	AMC	474127
J8134587	CHRYS	474127
J8182957	AMC	**473442**!
JB5423	LETN	456799H=
JB5423	WABCO	456799H=
JC-1275136218	JN-CR	325940*=
JE9229	MINNM	**471570**!
JEJ40B304430	CINMI	**473228**
JG1291	MARMO	**471192**
JG2361	SPG	JG2361
JH20912	JA-HE	**471760**
JH20917	JA-HE	**473213**!
JH20920	JA-HE	**471646**!
JH20921	JA-HE	350942
JH20923	JA-HE	**470590**
JH20924	JA-HE	**471554**!
JH20927	JA-HE	**471649**!
JH20928	JA-HE	**471646**!
JH20938	JA-HE	**471532**
JH20939	JA-HE	**481537**
JH20940	JA-HE	350156
JH20940	JA-HE	**473096**
JJ2560	SPG	J2560
JL2361	SPG	JL2361
JM172	LK-BT	**476470**
JMU149A	BR-WN	**471554**!
JN2521	DETRO	JN2521
JN2521	SPG	JN2521
JO13	ATP	7018N=
JO57	ATP	9449
JOOO38066	FWD	**415072**
JOOO83065	FWD	**415559**
JR139	FMC	**472439**
JR139	LK-BT	**472439**
JSX-99333	SPG	99333
JSX-99351	SPG	99351
JSX-99372	SPG	99372
JSX-99437	SPG	99437
JSX-99650	SPG	99650
JSX99210	SPG	99210
JSX99311	SPG	99311
JSX99362	SPG	99362
JSX99367	SPG	99367
JSX99599	SPG	99599
JT265A	MINNM	470059
JT265A	MINNM	**470380**!
JT3005	MINNM	**473010**!
JT3089	MINNM	450165
JT3089	MINNM	**471801**!
JT3111	MINNM	**471192**
JT3134	MINNM	**472299**
JT367	MINNM	**417316**!
JT467A	MINNM	**415995**!
JT885	MINNM	417267
JT885A	MINNM	**472354**!
JV-1055	VIC	710233
JV1000	VIC	TCS45635
JV1002	VIC	TCS45639-2
JV1004	VIC	TCS45635
JV1006	VIC	TCS45635
JV1007	VIC	224250
JV1015	VIC	225020
JV1023	VIC	224250
JV1025	VIC	223220
JV1036	VIC	224460
JV1044	VIC	223012
JV1054	VIC	1181
JV1059	VIC	710332
JV1059	VIC	TCS45719
JV1062	VIC	710056
JV1071	VIC	TCS45689
JV1072	VIC	224460
JV1080	VIC	TCS45718
JV1102	VIC	TCS45914
JV1106	VIC	TCS45884
JV1106	VIC	TCS45968
JV1107	VIC	TCS45635
JV1117	VIC	TCS45873-1
JV1128	VIC	TCS45918
JV1142	VIC	TCS45912
JV1174	VIC	TCS45958
JV1192	VIC	TCS45868
JV1195	VIC	TCS45859
JV13410	VIC	5414
JV1601	VIC	BS40638
JV1603	VIC	2909
JV1612	VIC	BS40620
JV1615	VIC	BS40667
JV1617	VIC	BS40604
JV1618	VIC	BS40619
JV1619	VIC	BS40615
JV1629	VIC	BS40182
JV1633	VIC	BS40625
JV2019	SPG	5604
JV500	VIC	2001
JV500	VIC	60X82X12!
JV500	VIC	BS27493
JV503	VIC	227020
JV503	VIC	70X88X8!
JV506	VIC	227235
JV507	VIC	228005
JV508	VIC	3698
JV508	VIC	BS40110
JV510	VIC	710205
JV510	VIC	BS16144
JV513	VIC	3772
JV518	VIC	BS40268
JV523	VIC	2922RS
JV523	VIC	2942RS
JV523	VIC	BS40380
JV523	VIC	BS40620
JV523	VICRL	82001
JV525	VIC	BS40449
JV525	VIC	BS40449-1
JV531	VIC	5210
JV534	VIC	227235
JV534	VIC	228005
JV536	VIC	229005
JV540	VIC	224250
JV547	VIC	3893V
JV547	VIC	39608
JV548	VIC	229005
JV550	VIC	228700
JV552	VIC	3698
JV552	VIC	BS40110
JV552	VICRL	82012
JV553	VIC	3698
JV553	VIC	716445
JV553	VIC	BS40110
JV553	VIC	BS40578
JV553	VICRL	82012
JV556	VICRL	82016
JV557	VIC	BS40396
JV563	VIC	228009
JV565	VIC	TCS45483
JV567	VIC	716102
JV568	VIC	17746
JV569	VIC	17748
JV595	VIC	BS40583
JV596	VIC	40375
JV600	VIC	5068
JV602	VIC	5095
JV603	VIC	5092
JV605	VIC	5127
JV606	VIC	5414
JV606	VICRL	82016
JV607	VIC	5650
JV610	VIC	5132
JV611	VIC	713750
JV611	VIC	BS15868
JV611	VIC	BS40509
JV611	VIC	BS40592
JV611	VICRL	82011
JV614	VIC	5117

! Industrial Size/Type * Minor Width Difference

= The U.S. customer service number is 877-4-TIMKEN. The Canadian customer service numbers are 800-565-4927 (English) and 800-565-0438 (French-Canadian).

Mfr. No.	Name	Zero Duplication or Recommended Industrial
JV614	*VICRL*	82005
JV615	*VIC*	**473573**
JV617	*VIC*	**473573**
JV617	*VIC*	5750
JV617	*VICRL*	82027
JV618	*VIC*	5117
JV618	*VIC*	5118
JV618	*VICRL*	82015
JV619	*VIC*	3698
JV624	*VIC*	17720
JV626	*VIC*	1945
JV626	*VIC*	228480
JV627	*VIC*	228020
JV627	*VIC*	80X105X13!
JV628	*VIC*	226020
JV628	*VIC*	60X80X8!
JV629	*VIC*	227040
JV629	*VIC*	70X90X10!
JV629	*VIC*	BS25035
JV634	*VIC*	227550
JV634	*VIC*	75X100X12!
JV636	*VIC*	BS16192
JV637	*VIC*	5591
JV638	*VIC*	5112
JV638	*VIC*	5112S
JV638	*VICRL*	82024
JV640	*VIC*	224520
JV640	*VIC*	45X60X10!
JV642	*VIC*	BS40382
JV643	*VIC*	716102
JV644	*VIC*	228480
JV648	*VIC*	BS1280
JV650	*VIC*	5419
JV650	*VIC*	BS5048
JV656	*VIC*	BS1280
JV658	*VIC*	BS5974
JV663	*VIC*	BS1280
JV664	*VIC*	5585
JV677	*VIC*	BS5974
JV683	*VIC*	5596=
JV687	*VIC*	5585
JV688	*VIC*	BS5155
JV690	*VIC*	5479
JV692	*VIC*	BS5974
JV698	*VIC*	BS5974
JV699	*VIC*	5072
JV705	*VIC*	5072
JV706	*VIC*	5092
JV707	*VIC*	5390
JV707P	*VIC*	5390
JV708	*VICRL*	82022
JV710	*VIC*	5095
JV712	*VIC*	5576
JV719	*VIC*	5591
JV728	*VIC*	5337
JV730	*VIC*	5095
JV730	*VICRL*	82003
JV730P	*VIC*	5116
JV730R	*VIC*	5108
JV732	*VIC*	BS1280
JV741	*VIC*	5095
JV742	*VIC*	5591
JV743	*VIC*	5111
JV743	*VIC*	5111S
JV743	*VICRL*	82017
JV745	*VIC*	5591
JV749	*VIC*	5095
JV821	*VIC*	5587
JV844	*VIC*	5587
JV860	*VIC*	5587
JV861	*VIC*	5587
JV870	*VIC*	472341!
JV878	*VIC*	321460
JV883	*VIC*	9845
JV907	*VIC*	227550
JV907	*VIC*	75X100X12!
JV910	*VIC*	224520
JV910	*VIC*	45X60X10!
JV914	*VIC*	3771
JV941	*VIC*	224460
JV942	*VIC*	224460
JV943	*VIC*	224835
JV944	*VIC*	224460
JV945	*VIC*	224835
JV954	*VIC*	TCS45472
JV954	*VIC*	TCS45483
JV956	*VIC*	710331
JV962	*VIC*	224250
JV982	*VIC*	3476
JV983	*VIC*	3476
JV984	*VIC*	1108
JV993	*VIC*	3459
JV994	*VIC*	224460
JV998	*VIC*	224250
JVE753	*SPG*	JV753
JX1966+3501V	*SPG*	5666
K-100111VA	*SPG*	4564V
K-4562-VA1	*SPG*	4562V
K-474241-V	*SPG*	474241V!
K-977122TD	*SPG*	977122
K-997100TD	*SPG*	997100
K003896BXR	*SPG*	3896
K100044CA	*SPG*	2007N
K100058TX	*SPG*	100058
K100110VA	*SPG*	4563V
K100129R	*SPG*	712692
K100252TD	*SPG*	100252
K100253TD	*SPG*	100253
K100270TX	*SPG*	100270
K100294TD	*SPG*	100294
K100296TD	*SPG*	100296
K100348TD	*SPG*	100467
K100352TD	*SPG*	100352
K100369VD	*SPG*	100369
K100447VA8	*SPG*	4278
K100459TX	*SPG*	100459T
K100467TD	*SPG*	100467
K100497VA8	*SPG*	100497V
K100497VA8	*SPG*	710452
K100664SSR	*SPG*	9599S
K100672V	*SPG*	**350936**
K100686VXR	*SPG*	4189H
K100721R	*SPG*	1940
K100721RA	*SPG*	1940
K100733VD	*SPG*	710210
K1110	*OLIVE*	**415995**!
K11223B	*Y-T*	**450400**
K12001D	*Y-T*	**470954**!
K12011AA	*Y-T*	**471750**!
K12011AD	*Y-T*	**470774**!
K12011AE	*Y-T*	470950!
K12011AE	*Y-T*	6241S
K12011AF	*Y-T*	**473215**!
K12011AG	*Y-T*	**470625**!
K12011AH	*Y-T*	**470625**!
K12011AJ	*Y-T*	470059
K12011AJ	*Y-T*	**470380**!
K12011AK	*Y-T*	**471820**
K12011AL	*Y-T*	470059
K12011AL	*Y-T*	**470380**!
K12011AM	*Y-T*	**474281**!
K12011AN	*Y-T*	**472213**
K12011AP	*Y-T*	**474281**!
K12011AR	*Y-T*	**472185**!
K12011AS	*Y-T*	**470334**!
K12011AT	*Y-T*	**470334**!
K12011AU	*Y-T*	**470334**!
K12011AV	*Y-T*	**473447**
K12011AW	*Y-T*	**470334**!
K12011AW	*Y-T*	50289
K12011AX	*Y-T*	**473447**
K12011AZ	*Y-T*	**473462**
K12011BA	*Y-T*	**472394**
K12011BB	*Y-T*	**472924**!
K12011BD	*Y-T*	**470530**!
K12011BG	*Y-T*	**472409**!
K12011BK	*Y-T*	455321
K12011BL	*Y-T*	**471272**!
K12011BM	*Y-T*	**411253**!
K12011BN	*Y-T*	**472029**
K12011BQ	*Y-T*	**413248**
K12011BR	*Y-T*	**415458**!
K12011BS	*Y-T*	**417082**
K12011BU	*Y-T*	**416921**!
K12011BV	*Y-T*	**416921**!
K12011BW	*Y-T*	**416921**!
K12011C	*Y-T*	**471553**!
K12011CB	*Y-T*	**415027**!
K12011CB	*Y-T*	**415027**
K12011G	*Y-T*	**481568**!
K12011H	*Y-T*	**471231**!
K12011J	*Y-T*	**481443**!
K12011M	*Y-T*	481650
K12011N	*Y-T*	481650
K12011R	*Y-T*	**480210**!
K12011S	*Y-T*	**471651**
K12011V	*Y-T*	**471765**!
K12011Y	*Y-T*	**471354**!
K1256	*PUL*	**412119**!
K13006	*ROSS*	**471652**
K134-171	*KEN*	733111
K1364	*PUL*	**471554**!
K1381	*ROSS*	**472287**!
K13810	*ROSS*	**472287**!
K1443	*OLIVE*	**416921**!
K1447	*FULLE*	OK1000
K1450	*FULLE*	OK1000
K14669	*ROSS*	**471649**!
K154	*MINNM*	**472572**!
K1582	*OLIVE*	**323138**!
K1588	*OLIVE*	**410496**!
K1590	*OLIVE*	473436
K1590	*WHITE*	473436
K1622	*AVCO*	200354
K1660	*AVCO*	**471354**!
K1715	*AVCO*	350909
K1715	*AVCO*	**471224**!
K2002	*FULLE*	OK1000
K2205RA	*SPG*	2205
K2262	*OLIVE*	411
K2279H	*SPG*	**415449**
K229	*PORTR*	**416345**!
K229	*PORTR*	455033
K2375	*PUL*	**470530**!
K24004	*ROSS*	240356
K2530	*AVCO*	**471224**!
K2532	*AVCO*	**473232**
K2658HXO	*SPG*	2658
K2692RXR	*SPG*	**350936**
K2693P	*CASE*	6833=
K2757R	*SPG*	2757N
K2757RA	*SPG*	2757N
K2757RRR	*SPG*	710006
K2765P	*CASE*	80313
K2780P	*CASE*	200854
K2789P	*CASE*	200854
K2900	*AVCO*	40360S!
K2922CA	*SPG*	710046
K2922S	*SPG*	710046
K2942RRR	*SPG*	**350936**
K2955RXO	*SPG*	2955
K300	*PORTR*	455197N
K3008	*CASE*	6575S
K301	*PORTR*	**415351**!
K3028R	*SPG*	**473179**
K3028RER	*SPG*	**473179**
K3028RXR	*SPG*	**473179**
K3028V	*SPG*	**473179**
K3028VG2	*SPG*	**417360**
K305	*PORTR*	**416892**!
K30622	*VIC*	35224
K3083HN	*SPG*	3083
K3103VXR	*SPG*	713103
K31111	*VIC*	35418
K32003	*ROSS*	5458$
K320249VA	*SPG*	320249
K320249VA1	*SPG*	320249
K320259VD	*SPG*	320259
K3202615	*KY-CL*	**471554**!
K320612RA	*SPG*	224025
K320676RA	*SPG*	710345
K320750VD	*SPG*	223420
K320753R	*SPG*	223340
K320759RA	*SPG*	712001
K32077	*WHITE*	**323138**!
K320802R	*SPG*	224020
K320802RA	*SPG*	224020
K320840RA	*SPG*	222025
K320910RA	*SPG*	225020
K320910RA1	*SPG*	225020
K320910VD	*SPG*	225020
K320917RA	*SPG*	223014
K321152HA	*SPG*	1108
K321155RA	*SPG*	223750
K321155VD	*SPG*	223750
K321155VD	*SPG*	321155
K321157	*SPG*	224460
K321157VD	*SPG*	321157
K321158R	*SPG*	223012
K321165R	*SPG*	224650
K321165RA	*SPG*	224650
K321204V	*SPG*	223420
K321204VG	*SPG*	223420
K321208	*SPG*	321460
K321212RA	*SPG*	321212
K321212RA	*SPG*	710316
K321214V	*SPG*	710164
K321220RA	*SPG*	222020
K321220RA	*SPG*	710450
K321229	*SPG*	712010
K321236RA	*SPG*	1987
K321238RA	*SPG*	710318
K321240RA	*SPG*	1038
K321244RA	*SPG*	1953
K321250RA	*SPG*	710310
K321250V	*SPG*	710310
K321251HA	*SPG*	223602
K321251RA	*SPG*	710308
K321266R	*SPG*	221710
K321266RA	*SPG*	221710
K321273R	*SPG*	221820
K321273RA	*SPG*	221820
K321282R	*SPG*	223831
K321282RA	*SPG*	223831
K321287RA	*SPG*	712001*
K321293RA	*SPG*	223220
K321295RA	*SPG*	224020
K321298RA	*SPG*	223802

! Industrial Size/Type * Minor Width Difference $ F-M Number Is Part Of A Kit
= The U.S. customer service number is 877-4-TIMKEN. The Canadian customer service numbers are 800-565-4927 (English) and 800-565-0438 (French-Canadian).

Mfr. No.	Name	Zero Duplication or Recommended Industrial
K321299R	*SPG*	223800
K321299RA	*SPG*	223800
K32129SRA	*SPG*	224020
K321306H	*SPG*	712007
K321306HA	*SPG*	712007
K321313R	*SPG*	223010
K321313RA	*SPG*	223010
K321364R	*SPG*	710187
K321364RA	*SPG*	710187
K321378R	*SPG*	321378
K321378RA	*SPG*	710233
K321380R	*SPG*	321380
K321380RA	*SPG*	223230
K321382R	*SPG*	226510
K321382RA	*SPG*	226510
K321383RA	*SPG*	710236
K321416R	*SPG*	1205N
K321416R	*SPG*	321416
K321416RA	*SPG*	321416
K321421H	*SPG*	1172
K321421HA	*SPG*	1172
K321430R	*SPG*	710355
K321430RA	*SPG*	710355
K321433VD	*SPG*	710399
K3227RXR	*SPG*	3227
K3229964	*KY-CL*	**417486**
K323324VG	*SPG*	3476V
K324115R	*SPG*	223235
K324115RA	*SPG*	223235
K324151R	*SPG*	710316
K324186H	*SPG*	710190
K324186HA	*SPG*	710190
K324204VX	*SPG*	324204
K325408R	*SPG*	227410
K3273	*AVCO*	**470625**!
K327820HA	*SPG*	228015
K3325179	*KY-CL*	**415937**!
K3365	*AVCO*	203006!
K3382	*AVCO*	**417509**
K3385	*AVCO*	**470088**
K3487	*AVCO*	**471689**!
K3489	*AVCO*	**471413**
K3517SSO	*SPG*	9845
K3517VXR	*SPG*	9845V
K3557	*AVCO*	**471787**
K3600	*FORD*	200354
K36060	*OLIVE*	205004
K3700BXR	*SPG*	7044NA
K3727RB	*SPG*	1963
K3732BXR	*SPG*	3732S
K37498K	*JOHND*	**471413**
K3891	*AVCO*	**472164**!
K3892	*AVCO*	**471192**
K3990RA	*SPG*	1990
K4026RX	*SPG*	4026
K4027RER	*SPG*	4072
K4027RER	*SPG*	4072N
K4048	*AVCO*	203008
K4072REK	*SPG*	4072
K4072REK	*SPG*	4072N
K4074VJ0	*SPG*	3604
K415327V	*SPG*	**415327**
K4278BX	*SPG*	4278
K4278BXR	*SPG*	4278
K4278VJO	*SPG*	4278
K4279	*AVCO*	**450492**
K43	*CASE*	204002
K4337	*CASE*	**471264**!
K435	*TLSMI*	**415458**!
K4445	*AVCO*	**473231**!
K4458VA0	*SPG*	**472324**
K4529RER	*SPG*	4529N
K4538	*AVCO*	40520S
K4543VA1	*SPG*	**476470**
K4544VA1	*SPG*	4544V
K4582	*AVCO*	**473445**
K4583	*AVCO*	**473235**!
K4598RE0	*SPG*	4598
K4598RER	*SPG*	4598
K46	*TMTR*	204002
K4635HX0	*SPG*	4635H
K4655	*AVCO*	**471344**
K4655RER	*SPG*	714655
K4661	*AVCO*	42352S
K470676RAR	*SPG*	710345
K471113VJ	*SPG*	471113V
K471113VJR	*SPG*	471113V
K471188RAR	*SPG*	**472492**
K471225RAR	*SPG*	710263
K4727	*CASE*	200880=
K475937HG0	*SPG*	**415937**
K4813VDR	*SPG*	4813V
K482	*TLSMI*	55155=
K4846VA8	*SPG*	3604
K4846VA8	*SPG*	4846
K487397VGR	*SPG*	487397V
K4942R	*SPG*	4072N
K4942RER	*SPG*	4072N
K4950RER	*SPG*	4950
K501	*PORTR*	**415645**!
K501	*PORTR*	455104
K5010	*AVCO*	**471413**
K502	*PORTR*	**416865**!
K503	*TLSMI*	**473466**
K504	*PORTR*	**416892**!
K5045	*CASE*	**471224**
K506	*PORTR*	**416888**!
K507	*PORTR*	455311
K5108219	*KY-CL*	205017
K511	*PORTR*	**415035**
K511	*PORTR*	**415035**!
K5114335	*KY-CL*	**415284**
K5115454	*KY-CL*	**417344**
K5116224	*KY-CL*	**473454**
K5116229A	*KOHL*	**415035**=
K5117983	*KY-CL*	**470954**!
K5131329	*KY-CL*	**470625**!
K5134336	*KOHL*	**482253**=
K5134924	*KY-CL*	482069N
K515	*PORTR*	**416229**
K5153373	*KY-CL*	**417344**!
K5154314	*KY-CL*	**416271**!
K516	*PORTR*	**416107**!
K516	*PORTR*	455073
K5161028	*KY-CL*	**471570**!
K517	*PORTR*	**417602**!
K517	*TEXAS*	**417602**!
K518	*PORTR*	**415072**
K5192438	*KY-CL*	6370N
K5192439	*KY-CL*	J712
K5196927	*KY-CL*	75251S
K5197860	*KOHL*	455251N
K521	*PORTR*	**417596**
K521	*TEXAS*	**417596**
K522	*TLSMI*	473451!
K5230007	*KY-CL*	**471526**!
K5255	*CASE*	**455019**!
K5312	*CASE*	JV1019=
K5318	*CASE*	200875=
K5347	*CASE*	200878=
K5348	*CASE*	JV1060=
K5511	*SPG*	5732
K5513	*SPG*	39804
K565	*PORTR*	**415991**
K565	*PORTR*	455146!
K566	*BUTBN*	**415995**!
K5856	*PUL*	**481864**
K588	*TLSMI*	**418028**
K588	*TLSMI*	455137!
K5950	*FORD*	**471820**
K600001	*SPG*	5728
K600015	*SPG*	901017
K600053	*SPG*	39887
K600081	*SPG*	921633
K600156	*SPG*	901558
K600169	*SPG*	**417433**
K600211	*SPG*	600211
K600254	*SPG*	39890
K600278	*SPG*	39900
K600300	*SPG*	907104
K600308	*SPG*	600308
K600330	*SPG*	**417433**
K600343	*SPG*	41163T
K600374	*SPG*	907190
K600376	*SPG*	39869
K600377	*SPG*	39869
K600382	*SPG*	39869
K600386	*SPG*	907190
K600399	*SPG*	600399
K600403	*SPG*	5734
K600414	*SPG*	**416404**
K600428	*SPG*	710926
K600454	*SPG*	600454
K600L-200	*CONTI*	**412119**!
K620	*MASSE*	**472439**
K620	*OLIVE*	**472439**
K620	*WHITE*	**472439**
K623448S	*CASE*	**470898**
K623450	*CASE*	**472015**!
K6700846	*KY-CL*	**471567**!
K674	*TLSMI*	**472560N**!
K679	*BUTBN*	**415023**
K682	*BUTBN*	470950!
K682	*BUTBN*	6241S
K687	*BUTBN*	**472258**!
K693	*OLIVE*	**455079**!
K693	*PORTR*	**415090**
K694	*PORTR*	455290
K694	*TEXAS*	455290
K706165	*WILYS*	**416738**!
K706165	*WILYS*	450096
K734504	*WILYS*	410059
K734504	*WILYS*	**470380**!
K735996	*WILYS*	**472560N**
K769	*PUL*	**476838**!
K7931	*CASE*	6590S
K801077TD	*SPG*	801077
K8104558AB11	*GE*	**470606**!
K8104558AB3	*GE*	**481073**
K8104558AB4	*GE*	**474276**!
K8104558AB6	*GE*	**471472**!
K8169240AA10	*GE*	**471281**!
K8169240AA11	*GE*	**471103**!
K8169240AA13	*GE*	**471255**!
K8169240AA14	*GE*	**470590**
K8169240AA15	*GE*	50199S!
K8169240AA15	*GE*	6863S!
K8169240AA16	*GE*	**471255**!
K8169240AA17	*GE*	**471224**!
K8169240AA18	*GE*	**471554**!
K8169240AA19	*GE*	**471472**!
K8169240AA2	*GE*	**481537**
K8169240AA20	*GE*	**350435**
K8169240AA21	*GE*	320457
K8169240AA3	*GE*	**330385**!
K8169240AA5	*GE*	**471539**!
K8169240AA6	*GE*	**481073**
K8169240AA7	*GE*	**470954**!
K8169240AA8	*GE*	**474277**
K8169240AB1	*GE*	**471766**!
K8169240AD3	*GE*	340413
K8169240AD4	*GE*	**330385**
K8169240AD5	*GE*	**472560N**
K8169240AD8	*GE*	**471224**!
K818	*BUTBN*	**472179**
K844	*PORTR*	**417601**
K8705301	*RCA*	**471442**!
K8705302	*RCA*	**455151**
K8705303	*RCA*	**417491**
K8705304	*RCA*	**416332**!
K8767	*ROSS*	**471750**!
K8768	*ROSS*	**471224**!
K8772152AA2	*GE*	**330385**!
K901017TD	*SPG*	901017
K901519TB	*SPG*	**473517**
K901534TD2	*SPG*	**415303**
K901543TD	*SPG*	**417350**
K901558TD	*SPG*	901558
K901558TD1	*SPG*	39882
K901605TB	*SPG*	39849
K902519TD2	*SPG*	39926
K9028	*PUL*	**472015**!
K904072TD0	*SPG*	904072
K904229TD	*SPG*	904229
K904301TDR	*SPG*	**470898**
K904309TB	*SPG*	39803
K904309TBR	*SPG*	39803
K907010TD	*SPG*	907010
K907040TD	*SPG*	39887
K907040TD2	*SPG*	39887
K907041TD1	*SPG*	39887
K907068TD2	*SPG*	39886
K907084TD	*SPG*	39900
K907093TD	*SPG*	39804
K907104TB	*SPG*	907104
K907159TD	*SPG*	**471267**
K907186TB	*SPG*	39869
K907188TB	*SPG*	907188
K907190TB	*SPG*	907190
K914413TDR	*SPG*	914413
K917004TD2	*SPG*	41163T
K917130TD	*SPG*	39609
K917238TD	*SPG*	**416404**
K921633TG	*SPG*	921633
K924057TD0	*SPG*	924057
K924381TBR	*SPG*	36384
K927112TD1	*SPG*	927112
K9331	*ROSS*	**471570**!
K941001TB	*SPG*	600211
K944080TDR	*SPG*	**471267**
K944229TD	*SPG*	944229
K944349TD	*SPG*	**417433**
K944349TD0	*SPG*	**417433**
K944379TB	*SPG*	944379
K944416TC	*SPG*	944416
K947058TD	*SPG*	39890
K947058TD1	*SPG*	39890
K947119TD	*SPG*	**471255**
K947128TB	*SPG*	600211
K95	*PUL*	**415995**!
K9502BJ0	*SPG*	7044NA
K9540BX1	*SPG*	**472070**
K9674BXR	*SPG*	9674
K9681	*PUL*	**472439**
K972	*PORTR*	**415072**
K991557TD1	*SPG*	39882
K9C8483	*CATER*	**416167**=
K9L8336	*CATER*	J1136

! Industrial Size/Type

= The U.S. customer service number is 877-4-TIMKEN. The Canadian customer service numbers are 800-565-4927 (English) and 800-565-0438 (French-Canadian).

Mfr. No.	Name	Zero Duplication or Recommended Industrial
K9L8340	*CATER*	**415725**!
K9L8341	*CATER*	**473474**
K9L8483	*CATER*	**416167**=
KA1261	*KELSE*	**417172**
KA62338	*VICK*	240731
KAA09102001	*KELSE*	**413247**!
KAA13269	*JOHND*	**471224**!
KC4609	*KOEH*	**415138**!
KD3665P	*CASE*	**450456**!
KE406	*MINNM*	**473236**!
KE532	*WHITE*	**470954**!
KE7237	*PUL*	**417344**!
KK5548R	*SPG*	6312
KM552	*KY-CL*	**415449**!
KO1	*ATP*	**331107N**
KO3	*ATP*	7692S
KT260A	*MINNM*	**472179**
KT308A	*MINNM*	50191
KT308B	*MINNM*	50191
KT365A	*MINNM*	**473464**
KT365A	*MINNM*	**473464**!
KT458B	*MINNM*	**476470**
KT738	*PAYEN*	35127
KX25261	*JOHND*	**417487**
L-0001-003	*IAPCO*	1195
L-0004-005	*IAPCO*	228480
L-0006-005	*IAPCO*	716484
L-0010-005	*IAPCO*	224520
L-0010-008	*IAPCO*	229005
L-0011-003	*IAPCO*	3677
L-0013-007	*IAPCO*	1192
L-0016-001	*IAPCO*	1196
L-0016-002	*IAPCO*	494122
L-0016-004	*IAPCO*	**473237**!
L-0016-006	*IAPCO*	**473237**!
L-0016-010	*IAPCO*	**473258**
L-0016-011	*IAPCO*	**473258**
L-0016-016	*IAPCO*	474134
L-0017-001	*IAPCO*	1992
L-0017-003	*IAPCO*	473823
L-0017-005	*IAPCO*	1992
L-0017-008	*IAPCO*	5108
L-0020-001	*IAPCO*	1188
L-0020-006	*IAPCO*	1188
L-0020-008	*IAPCO*	3771
L-0020-010	*IAPCO*	1979
L-0020-015	*IAPCO*	228010
L-0020-017	*IAPCO*	1188
L-0020-022	*IAPCO*	1981
L-0020-029	*IAPCO*	32X58X8!
L-0020-031	*IAPCO*	2016
L-0020-033	*IAPCO*	1128
L-0020-038	*IAPCO*	1977
L-0020-041	*IAPCO*	1974
L-0020-043	*IAPCO*	712011
L-0020-044	*IAPCO*	1884
L-0020-045	*IAPCO*	2002
L-0020-048	*IAPCO*	225540
L-0020-049	*IAPCO*	334111
L-0020-050	*IAPCO*	222540
L-0020-051	*IAPCO*	224025
L-0022-003	*IAPCO*	223014
L-0022-006	*IAPCO*	223035
L-0022-013	*IAPCO*	**473230**!
L-0022-019	*IAPCO*	64X80X8
L-0026-008	*IAPCO*	1952
L-0026-011	*IAPCO*	**473367**
L-0026-012	*IAPCO*	3771
L-0026-014	*IAPCO*	1990
L-0026-016	*IAPCO*	494117
L-0026-021	*IAPCO*	1938
L-0026-022	*IAPCO*	1943
L-0026-023	*IAPCO*	1939
L-0029-001	*IAPCO*	239127
L-0029-002	*IAPCO*	239128
L-0029-008	*IAPCO*	239127
L-0034-002	*IAPCO*	473812
L-0038-010	*IAPCO*	205015
L-0038-011	*IAPCO*	473823
L-0038-013	*IAPCO*	42X55X8!
L-0040-010	*IAPCO*	1996
L-0040-018	*IAPCO*	1996
L-0048-001	*IAPCO*	55X72X8!
L-0054-003	*IAPCO*	1960
L-0054-005	*IAPCO*	239145
L-0054-015	*IAPCO*	239144
L-0058-003	*IAPCO*	1984
L-0058-015	*IAPCO*	224015
L-0061-001	*IAPCO*	224015
L-0061-004	*IAPCO*	227045
L-0061-005	*IAPCO*	1950
L-0061-013	*IAPCO*	228010
L-0061-018	*IAPCO*	1960
L-0061-019	*IAPCO*	1956
L-0061-021	*IAPCO*	1959
L-0061-022	*IAPCO*	1959
L-0061-025	*IAPCO*	1177
L-0061-031	*IAPCO*	1987
L-0062-003	*IAPCO*	**473454**
L-0062-013	*IAPCO*	35X47X7
L-0062-014	*IAPCO*	**473573**
L-0062-018	*IAPCO*	1192
L-0062-021	*IAPCO*	**473234**!
L-0062-022	*IAPCO*	**472397**!
L-0062-023	*IAPCO*	**471870**!
L-0062-025	*IAPCO*	**471224**!
L-0062-026	*IAPCO*	**472439**
L-0062-028	*IAPCO*	**480630**!
L-0062-030	*IAPCO*	223535
L-0065-006	*IAPCO*	1217
L-0065-007	*IAPCO*	1165
L-0065-008	*IAPCO*	**473455**!
L-0065-009	*IAPCO*	1209
L-0066-007	*IAPCO*	**473238**!
L-0066-016	*IAPCO*	**473238**!
L-0070-001	*IAPCO*	**471192**
L-0070-002	*IAPCO*	**472164**!
L-0070-003	*IAPCO*	1873
L-0070-008	*IAPCO*	**473241**
L-0070-013	*IAPCO*	**473228**
L-0070-021	*IAPCO*	**473234**!
L-0071-003	*IAPCO*	228010
L-0071-005	*IAPCO*	75X95X10
L-0071-006	*IAPCO*	3771
L-0080-002	*IAPCO*	1165
L-0080-003	*IAPCO*	3476
L-0080-004	*IAPCO*	716102
L-0080-007	*IAPCO*	1962
L-0080-010	*IAPCO*	710205
L-0080-011	*IAPCO*	1108
L-0090-002	*IAPCO*	**473179**!
L-4561-VA1	*SPG*	4561V
L-4810-VA1	*SPG*	714810
L0001002	*IAPCO*	227040
L0001002	*IAPCO*	70X90X10!
L0004001	*IAPCO*	224100
L0004001	*IAPCO*	40X65X10!
L0010001	*IAPCO*	224015
L0010001	*IAPCO*	40X52X7!
L0010002	*IAPCO*	1174
L0010002	*IAPCO*	38X52X8.5!
L0010003	*IAPCO*	1012
L0010003	*IAPCO*	1012N
L0010003	*IAPCO*	45X62X8!
L0010007	*IAPCO*	1012
L0010007	*IAPCO*	1012N
L0010007	*IAPCO*	45X62X8!
L0010012	*IAPCO*	226020
L0010012	*IAPCO*	60X80X8!
L0010013	*IAPCO*	224820
L0010013	*IAPCO*	48X62X8!
L0016003	*IAPCO*	1955
L0016003	*IAPCO*	52X65X9!
L0016012	*IAPCO*	224255
L0016012	*IAPCO*	42X65X10!
L0016014	*IAPCO*	225010
L0016014	*IAPCO*	50X65X8!
L0016015	*IAPCO*	225110
L0016015	*IAPCO*	51X65X7!
L0017004	*IAPCO*	1994
L0017004	*IAPCO*	48X70X9!
L0017007	*IAPCO*	228020
L0017007	*IAPCO*	80X105X13!
L0020007	*IAPCO*	35X50X8!
L0020007	*IAPCO*	3771
L0020011	*IAPCO*	224045
L0020011	*IAPCO*	40X62X12!
L0020012	*IAPCO*	1181
L0020012	*IAPCO*	41X56X7!
L0020013	*IAPCO*	1994
L0020013	*IAPCO*	48X70X9!
L0020014	*IAPCO*	1994
L0020014	*IAPCO*	48X70X9!
L0020018	*IAPCO*	223555
L0020018	*IAPCO*	35X64X8!
L0020021	*IAPCO*	224045
L0020021	*IAPCO*	40X62X12!
L0020023	*IAPCO*	1174
L0020023	*IAPCO*	38X52X8.5!
L0020036	*IAPCO*	224270
L0020036	*IAPCO*	42X72X10!
L0020039	*IAPCO*	223542
L0020039	*IAPCO*	35X55X11!
L0020040	*IAPCO*	1973
L0020040	*IAPCO*	48X65X10!
L0026010	*IAPCO*	1953
L0026010	*IAPCO*	42X60X7!
L0038001	*IAPCO*	**1213N**
L0038002	*IAPCO*	1214
L0038002	*IAPCO*	1214N
L0038003	*IAPCO*	1994
L0038003	*IAPCO*	48X70X9!
L0038004	*IAPCO*	228020
L0038004	*IAPCO*	80X105X13!
L0038006	*IAPCO*	227020
L0038006	*IAPCO*	70X88X8!
L0038007	*IAPCO*	1953
L0038007	*IAPCO*	42X60X7!
L0038009	*IAPCO*	224820
L0038009	*IAPCO*	48X62X8!
L0038012	*IAPCO*	1994
L0038012	*IAPCO*	48X70X9!
L0040005	*IAPCO*	1012
L0040005	*IAPCO*	1012N
L0040005	*IAPCO*	45X62X8!
L0040019	*IAPCO*	224045
L0040019	*IAPCO*	40X62X12!
L0040023	*IAPCO*	224045
L0040023	*IAPCO*	40X62X12!
L0040024	*IAPCO*	1992
L0040024	*IAPCO*	45X65X8!
L0046001	*IAPCO*	1174
L0046001	*IAPCO*	38X52X8.5!
L0046002	*IAPCO*	1174
L0046002	*IAPCO*	38X52X8.5!
L0046004	*IAPCO*	224520
L0046004	*IAPCO*	45X60X10!
L0046006	*IAPCO*	1187
L0046006	*IAPCO*	47X68X10!
L0046009	*IAPCO*	1174
L0046009	*IAPCO*	38X52X8.5!
L0046010	*IAPCO*	225020
L0046010	*IAPCO*	50X68X8!
L0046011	*IAPCO*	1945
L0046011	*IAPCO*	228480
L0048007	*IAPCO*	224045
L0048007	*IAPCO*	40X62X12!
L0048008	*IAPCO*	224252
L0048008	*IAPCO*	42X62X8!
L0054008	*IAPCO*	224835
L0054008	*IAPCO*	48X68X10!
L0058007	*IAPCO*	225230
L0058007	*IAPCO*	52X72X8!
L0058008	*IAPCO*	225420
L0058008	*IAPCO*	54X72X10!
L0058009	*IAPCO*	1012
L0058009	*IAPCO*	1012N
L0058010	*IAPCO*	225005
L0058010	*IAPCO*	50X62X7!
L0061002	*IAPCO*	1180
L0061002	*IAPCO*	41X55X7!
L0061006	*IAPCO*	1955
L0061006	*IAPCO*	52X65X9!
L0061007	*IAPCO*	223840
L0061007	*IAPCO*	38X58X8!
L0061008	*IAPCO*	223840
L0061008	*IAPCO*	38X58X8!
L0061009	*IAPCO*	227550
L0061009	*IAPCO*	75X100X12!
L0061010	*IAPCO*	224560
L0061010	*IAPCO*	45X68X7!
L0061012	*IAPCO*	224820
L0061012	*IAPCO*	48X62X8!
L0061015	*IAPCO*	225230
L0061015	*IAPCO*	52X72X8!
L0061016	*IAPCO*	224820
L0061016	*IAPCO*	48X62X8!
L0061027	*IAPCO*	226285
L0061027	*IAPCO*	62X85X8!
L0061029	*IAPCO*	223605
L0061029	*IAPCO*	36X50X7!
L0061030	*IAPCO*	225110
L0061030	*IAPCO*	51X65X7!
L0061032	*IAPCO*	223235
L0061032	*IAPCO*	32X46X6!
L0061033	*IAPCO*	224560
L0061033	*IAPCO*	45X68X7!
L0062031	*IAPCO*	224255
L0062031	*IAPCO*	42X65X10!
L0065005	*IAPCO*	224045
L0065005	*IAPCO*	40X62X12!
L0065011	*IAPCO*	1208
L0065011	*IAPCO*	48X72X7!
L0066001	*IAPCO*	224045
L0066001	*IAPCO*	40X62X12!
L0066014	*IAPCO*	224015
L0066014	*IAPCO*	40X52X7!
L0070007	*IAPCO*	224820
L0070007	*IAPCO*	48X62X8!
L0070029	*IAPCO*	1174
L0070029	*IAPCO*	38X52X8.5!
L0071001	*IAPCO*	224015
L0071001	*IAPCO*	40X52X7!
L0071004	*IAPCO*	224520
L0071004	*IAPCO*	45X60X10!
L0080005	*IAPCO*	1012
L0080005	*IAPCO*	1012N
L0090003	*IAPCO*	1945

! Industrial Size/Type
= The U.S. customer service number is 877-4-TIMKEN. The Canadian customer service numbers are 800-565-4927 (English) and 800-565-0438 (French-Canadian).

Mfr. No.	Name	Zero Duplication or Recommended Industrial
L0090003	IAPCO	228480
L0090004	IAPCO	225020
L0090004	IAPCO	50X68X8!
L1	LETN	**415072**
L10	LETN	55028
L100052TD	SPG	100052T
L100052TX	SPG	5279
L100052TX0	SPG	5279
L100065R	SPG	4583
L100065RER	SPG	4583
L100079R	SPG	2457
L100085TX	SPG	100085
L100086VJ	SPG	100086
L100086VJR	SPG	100086
L100095TD	SPG	5273
L100100VJ0	SPG	4764
L100100VJR	SPG	4764
L100189VJ	SPG	100189
L100200VJ	SPG	4764
L100202TD	SPG	5273
L100203TD	SPG	5274
L100204TD	SPG	5277
L100205TD	SPG	5278
L100239TD	SPG	5287
L100254TD	SPG	100254
L100266VA	SPG	**417484**
L100328TD0	SPG	**471192**
L100468TD	SPG	600305
L100607VD	SPG	3909
L100658HA	SPG	228480
L100729VD1	SPG	100729V
L10190	MWKEL	**473367**
L10190	MWKEL	**473367**!
L10191	MWKEL	**473313**
L102	ITM	1110
L1025	TLSMI	**450133**
L103	LETN	55028
L1032	TLSMI	**473460**
L1091	TLSMI	55030
L10963	PETTI	**415995**!
L1110	OLIVE	**416271**!
L1139	TLSMI	**470898**
L11783	PETTI	**417554**!
L118973	CASE	**411376**!
L118978	CASE	**416288**!
L1193N	JOHND	**471785**!
L1223	TLSMI	55199=
L1252	LEROI	**416288**!
L1253	LEROI	55242
L126168	CASE	**416288**!
L126168	CASE	456287=
L126169	CASE	**411376**!
L128290	CASE	4766S=
L12830	GERL	**472924**!
L1295	TLSMI	**472560N**!
L13	LETN	**415021**
L13199	GERL	455022
L1326	LETN	**415371**
L133	LETN	**415449**!
L1330	JOHND	**472179**
L1330C	JOHND	**472179**
L135	LETN	5865
L1354	LETN	5865
L1355	LETN	40389S
L136	LETN	**416332**!
L137	LETN	**472636**!
L1391N	JOHND	240733
L14	LETN	**415023**
L140	LETN	**417343**!
L141	LETN	**455151**
L1418	JOHND	**471763**
L1419	JOHND	450129
L1419	JOHND	**472826**!
L142	LETN	**415066**
L1420	JOHND	**471764**!
L1421	JOHND	**450065**
L144	LETN	**417604**
L1443	OLIVE	**472016**
L147	AVCO	**456105**
L147	LETN	**415302**
L148	LETN	**474253**
L149	AVCO	**456105**
L15	LETN	**416892**!
L150	LETN	**472144**!
L151	LETN	**415021**
L153	LETN	**412119**!
L154	LETN	**417556**
L1544C	JOHND	**472439**
L155	LETN	**473461**!
L156	LETN	**411253**!
L157	LETN	**471554**!
L158	LETN	**471466**!
L1586C	JOHND	240414
L159	LETN	**415058**
L16	LETN	**415138**!
L160	LETN	**473462**
L161	LETN	**472924**!
L162	LETN	240027=
L1624	LETN	**415001**!
L16243	LETN	**415001**!
L1625	LETN	**473464**!
L1625	LETN	**473464**
L1636C	JOHND	**254287**!
L1638C	JOHND	**471224**
L1639	LETN	**416921**!
L164	LETN	**415058**
L1648	LETN	**412119**!
L16483	LETN	**412119**!
L165	LETN	**473214**
L1650	LETN	**416229**
L1661A	LETN	455310
L167	LETN	**473467**
L1692	JOHND	**473421**
L170011	PETTI	**473243**
L170012	PETTI	**471692**!
L170015	PETTI	**450143**
L170016	PETTI	**473460**
L170019	PETTI	**473245**!
L17002	PETTI	**472394**
L170025	PETTI	**412027**
L17004	PETTI	**412119**!
L17005	PETTI	**471272**!
L17007	PETTI	**416888**!
L17008	PETTI	**415294**!
L173	LETN	481650
L175	LETN	**471231**!
L177	LETN	**471785**!
L1787Q	FR-HT	240731
L18	LETN	**417621**!
L180	LETN	**473010**!
L181	LETN	**470334**!
L182	LETN	**417486**
L1823	JOHND	**472492**!
L1823C	JOHND	**474272**
L183	LETN	417498
L19	LETN	**472179**
L193	LETN	**415007**
L1949N	JOHND	**472924**!
L196	LETN	**471651**
L197	LETN	**416153**!
L198	LETN	**417205**!
L2	LETN	**415124**
L20	LETN	**472185**!
L2015N	JOHND	**471652**
L2029CU	JOHND	4148
L2029CU	JOHND	**471424**!
L2031	CONTI	**471554**!
L21096	PETTI	**473243**
L2171	PETTI	**415645**!
L2171	PETTI	455104
L21711	PETTI	**472179**
L21712	PETTI	**470898**!
L21715	PETTI	**472397**!
L21717	PETTI	**470625**!
L21720	PETTI	**472164**!
L21726	PETTI	**472924**!
L2175S	SPG	2175
L2178	PETTI	**472636**!
L2194RA	SPG	7692S
L2194RX	SPG	2194
L2194RX8	SPG	2194
L2194RXR	SPG	2194
L22	LETN	**415938**
L2202N	JOHND	**472157**!
L2202N	JOHND	**472157**
L2234C	JOHND	**471267**!
L2261V	SPG	2261
L2297V	SPG	2297
L2297V	SPG	2297V!
L2326BN1	SPG	2326N
L2326RH	SPG	2326=
L23645	PETTI	6270
L24	LETN	**416738**!
L24	LETN	450096
L2465RER	SPG	2465
L2465RRR	SPG	2465
L25	LETN	**474265**
L2551BT	SPG	2551
L26	LETN	**416107**!
L26	LETN	455073
L27	LETN	**416476**!
L2776	LETN	**416891**!
L28	LETN	**416229**
L2854RA	SPG	2854
L2854RA4	SPG	2854
L2867VA	SPG	2867V=
L287	LETN	**415196**!
L2872	LETN	**415196**!
L2873	LETN	**415196**!
L29	LETN	**416239**!
L3	LETN	**471766**!
L30	LETN	**474265**
L30014	CASE	**470898**
L304	LETN	**416666**
L30489	CASE	**473459**
L30578	CASE	481336=
L30659	CASE	8907
L31	LETN	**471224**!
L31032	CASE	**471554**!
L31035	CASE	476424N
L3197	LETN	**415088**
L3197	LETN	**415088**!
L32	LETN	**455584**
L320595HA	SPG	320595
L320691VD	SPG	320691
L320754R	SPG	222330
L320839VD	SPG	224205
L321176H	SPG	710334
L321202HA	SPG	227045
L321209HA	SPG	222743
L321218HA	SPG	712008
L321241RA	SPG	228010
L321278HA	SPG	710332
L321283VD	SPG	710331
L321312H	SPG	712009
L321312HA	SPG	712009
L321365VD	SPG	1120
L3238	FWD	**481864**
L323840H	SPG	710329
L325400V	SPG	325400V
L325426HA	SPG	710060
L325429H	SPG	1019
L325429HA	SPG	1019
L325588VD	SPG	710237
L325635VG	SPG	325635V
L325635VG	SPG	716102
L325641HA0	SPG	228700
L325641VD0	SPG	228700
L325649HA	SPG	3698
L325662VD	SPG	3698
L325662VD0	SPG	3698
L325662VDO	SPG	3698
L325663VD	SPG	2377
L325691H	SPG	229006
L325691HA	SPG	229006
L325694HA0	SPG	228009
L3257	HU-WR	**471224**!
L325707H	SPG	710056
L325707HA	SPG	710056
L325749VD	SPG	228010*
L325749VD	SPG	325749V
L327820HA	SPG	228009
L327995VX	SPG	327995
L327995VX	SPG	4307V
L328050V	SPG	228005
L328051R	SPG	710060
L328052V	SPG	710075
L328053V	SPG	710232
L328054V	SPG	227235
L328059VD0	SPG	40375
L33034	CASE	**416070**
L33070	CASE	**415458**!
L3312	LETN	417498
L331210VG0	SPG	331210V
L33259	CASE	**416125**!
L33282	CASE	**473473**
L33535	CASE	416795N=
L34	LETN	**417546**!
L34033	CASE	**471341**
L3411N	JOHND	**471407**
L3418	LETN	**415034**!
L35	LETN	**416865**!
L350589VD	SPG	**473573**
L350589VG	SPG	**473573**
L35226	CASE	**415196**=
L35250	CASE	**413248**
L3541X	MASSE	**472185**!
L355778R	SPG	227040
L355778RA	SPG	227040
L36	LETN	**471649**!
L3654VX	SPG	710056
L3698VD	SPG	3698
L370501	LETN	**416229**
L3725	LETN	**473464**
L3725	LETN	**473464**!
L37255	LETN	**473464**
L37255	LETN	**473464**!
L3750	LETN	**416229**
L37502	LETN	**416229**
L38	LETN	**415227**!
L39	LETN	**472287**!
L3909VD	SPG	3909
L3953N	JOHND	**471795**
L3958	LETN	**417020**
L4	LETN	**415027**!
L4	LETN	**415027**
L4003	LETN	**415995**!
L4040RA1	SPG	4040N

! Industrial Size/Type * Minor Width Difference

= The U.S. customer service number is 877-4-TIMKEN. The Canadian customer service numbers are 800-565-4927 (English) and 800-565-0438 (French-Canadian).

Mfr. No.	Name	Zero Duplication or Recommended Industrial
L415983RHR	*SPG*	713750
L43	*LETN*	**473229**
L4307V	*SPG*	4307V!
L4333RAR	*SPG*	4333N
L4333RE0	*SPG*	4333N
L4359V	*SPG*	4359V
L4370RAR	*SPG*	4370N
L44	*LETN*	**470565**!
L4528RER	*SPG*	4528N
L4530RER	*SPG*	4530
L4532RE	*SPG*	4532N
L46024	*LETN*	**415035**!
L46024	*LETN*	**415035**
L46025	*LETN*	**476470**
L46048	*LETN*	**415036**
L46050	*LETN*	**415090**
L4670RER	*SPG*	**415449**
L471378	*LAZOR*	35292
L4741RER	*SPG*	4741
L475	*LETN*	**417273**
L4764RAR	*SPG*	4764
L4765RAR	*SPG*	4765
L478L-316	*CONTI*	485725N
L48	*LETN*	**417538**
L481033	*LAZOR*	35316
L481343	*LAZOR*	35315
L481378	*LAZOR*	35292
L481661	*LAZOR*	35292
L482145	*LAZOR*	35316
L485457VD	*SPG*	2377
L485457VDR	*SPG*	2377
L49-6027	*LAZOR*	1981
L49-7002	*LAZOR*	224835
L49-7010	*LAZOR*	225880
L49-7029	*LAZOR*	225020
L49-7037	*LAZOR*	1994
L49-7061	*LAZOR*	1953
L49-7072	*LAZOR*	1992
L49-7088	*LAZOR*	223830
L49-7118	*LAZOR*	1994
L49-7126	*LAZOR*	710318
L49-7142	*LAZOR*	224560
L49-7150	*LAZOR*	228005
L49-7169	*LAZOR*	224465
L49-7177	*LAZOR*	228005
L49-7185	*LAZOR*	224460
L49-7215	*LAZOR*	227410
L49-7215	*LAZOR*	BS40381
L49-7258	*LAZOR*	226840
L49-7266	*LAZOR*	227020
L49-7274	*LAZOR*	228020
L49-7282	*LAZOR*	1021V
L49-7282	*LAZOR*	BS40265
L49-7304	*LAZOR*	228010
L49-7320	*LAZOR*	712006
L49-7320	*LAZOR*	BS27493
L49-7380	*LAZOR*	227045
L49-7388	*LAZOR*	227045
L49-7410	*LAZOR*	228010
L49-7428	*LAZOR*	231004
L49-7428	*LAZOR*	BS16192
L49-7436	*LAZOR*	3771
L49-7444	*LAZOR*	222820
L49-7444	*LAZOR*	710325
L49-7452	*LAZOR*	222743
L49-7479	*LAZOR*	223831
L49-7533	*LAZOR*	8316
L49-7568	*LAZOR*	223020
L49-7592	*LAZOR*	228009
L49-7606	*LAZOR*	224025
L49-7622	*LAZOR*	223340
L49-7630	*LAZOR*	223602
L49-7640	*LAZOR*	223340
L49-7649	*LAZOR*	1038
L49-7657	*LAZOR*	1021V
L49-7657	*LAZOR*	BS40265
L49-7665	*LAZOR*	1019
L49-7665	*LAZOR*	BS40387
L49-7673	*LAZOR*	224025
L49-7681	*LAZOR*	710060
L49-7681	*LAZOR*	BS40449
L49-7690	*LAZOR*	223235
L49-7703	*LAZOR*	1987
L49-7738	*LAZOR*	713771
L49-7754	*LAZOR*	227610
L49-7754	*LAZOR*	BS40268
L49-7762	*LAZOR*	710060
L49-7770	*LAZOR*	227235
L49-7789	*LAZOR*	228005
L49-7878	*LAZOR*	228005
L49-7886	*LAZOR*	229006
L49-7932	*LAZOR*	222330
L49-7975	*LAZOR*	221820
L49-8009	*LAZOR*	223220
L49-8017	*LAZOR*	1217
L49-8025	*LAZOR*	228700
L49-8041	*LAZOR*	222020
L49-8050	*LAZOR*	223801!
L49-8069	*LAZOR*	1953
L49-8165	*LAZOR*	710331
L49-8173	*LAZOR*	710332
L49-8173	*LAZOR*	TCS45719
L49-8181	*LAZOR*	710331
L49-8221	*LAZOR*	710310
L49-8564	*LAZOR*	229005
L49-8572	*LAZOR*	223800
L49-8599	*LAZOR*	1981
L49-8602	*LAZOR*	228015
L49-8653	*LAZOR*	710310
L49-8696	*LAZOR*	223420
L49-8700	*LAZOR*	223605
L49-8750	*LAZOR*	223012
L49-8777	*LAZOR*	223420
L49-8793	*LAZOR*	224835
L49-8823	*LAZOR*	223750
L49-8831	*LAZOR*	229005
L49-8904	*LAZOR*	228480
L49-8912	*LAZOR*	710318
L49-8939	*LAZOR*	229006
L49-8955	*LAZOR*	710187
L49-8963	*LAZOR*	1981
L49-8971	*LAZOR*	710332
L49-8980	*LAZOR*	1181
L49-8998	*LAZOR*	713771
L49-9005	*LAZOR*	228008
L49-9013	*LAZOR*	228009
L49-9102	*LAZOR*	227235
L49-9102	*LAZOR*	228005
L49-9129	*LAZOR*	3771
L49-9137	*LAZOR*	223018
L49-9145	*LAZOR*	223750
L49-9145	*LAZOR*	224460
L49-9153	*LAZOR*	223750
L49-9153	*LAZOR*	224460
L49-9293	*LAZOR*	712008
L49-9307	*LAZOR*	223420
L49-9315	*LAZOR*	710271
L49-9390	*LAZOR*	223802
L49-9420	*LAZOR*	1989
L49-9447	*LAZOR*	228015
L49061	*LETN*	**415047**
L497231	*LAZOR*	228020
L497312	*LAZOR*	2001
L497312	*LAZOR*	60X82X12!
L497398	*LAZOR*	227550
L497398	*LAZOR*	75X100X12!
L4973VJO	*SPG*	4765
L497401	*LAZOR*	228010
L498220	*LAZOR*	BS16192-1
L5	*LETN*	**411376**!
L50	*LETN*	**416476**!
L51	*LETN*	**471442**!
L5162	*SPG*	4359V
L5188	*GERL*	**472185**!
L5259	*LETN*	**416888**!
L5260	*LETN*	**416239**!
L5261	*LETN*	**416107**!
L5261	*LETN*	455073
L5262	*LETN*	470059
L5262	*LETN*	**470380**!
L5263	*LETN*	**415090**
L5264	*LETN*	**417247**!
L5272	*SPG*	600305
L5273	*SPG*	5273
L5274	*SPG*	5274
L5277	*SPG*	5277
L5278	*SPG*	5278
L5279	*SPG*	5279
L5287	*SPG*	5287
L5291	*SPG*	5291
L5492	*LETN*	**415379**!
L5492	*LETN*	**415379**
L5514	*SPG*	39807
L5621	*LETN*	**416107**!
L5621	*LETN*	455073
L5638	*GERL*	**473467**
L5754	*LETN*	**415041**
L58	*LETN*	**415645**!
L58	*LETN*	455104
L6	*LETN*	**415187**
L600012	*SPG*	600012
L600016	*SPG*	600016
L600047	*SPG*	917034
L600095	*SPG*	39880
L600095	*SPG*	600095
L600255	*SPG*	39888
L600278	*SPG*	39899
L600305	*SPG*	600305
L600314	*SPG*	39608
L600319	*SPG*	600319
L600329	*SPG*	39880
L600345	*SPG*	947090
L600347	*SPG*	39805
L600348	*SPG*	917034
L600353	*SPG*	600353
L600355	*SPG*	600355
L600356	*SPG*	39889
L600357	*SPG*	5288
L600361C	*SPG*	600361
L600370	*SPG*	5290
L600389	*SPG*	600389
L600394	*SPG*	600394
L600398	*SPG*	600398
L600400+93430430	*SPG*	600400
L600402	*SPG*	39889
L600406	*SPG*	5291
L600428	*SPG*	710927
L600451	*SPG*	600451
L600477	*SPG*	5742
L600478	*SPG*	5741
L600501	*SPG*	600501
L600504	*SPG*	600504
L600504	*SPG*	600505
L600509	*SPG*	600509
L61	*LETN*	**456105**
L620	*OLIVE*	**473234**
L620	*WHITE*	**473234**!
L620B	*OLIVE*	**471692**!
L63	*LETN*	**412861**
L64	*LETN*	**471763**
L67	*LETN*	55222=
L69102	*LETN*	**476470**
L69105	*LETN*	**416345**!
L69105	*LETN*	455033
L693	*OLIVE*	**412943**
L7	*LETN*	**472397**!
L70	*LETN*	**415988**
L71	*LETN*	**415072**
L73	*LETN*	**471570**!
L7413RXR	*SPG*	9613S
L75	*LETN*	**473228**
L76	*LETN*	**473228**
L77	*LETN*	**417487**
L7735502	*GMC*	340872
L78	*LETN*	**471567**!
L8	*LETN*	**415991**
L8	*LETN*	455146!
L80	*LETN*	**417602**!
L801010TD	*SPG*	977105
L801018TD	*SPG*	5288
L81-6000	*LAZOR*	223240
L81-6019	*LAZOR*	223014
L81-6027	*LAZOR*	223014
L81-6035	*LAZOR*	2506
L81-6043	*LAZOR*	**473258**
L81-6060	*LAZOR*	225110
L81-6078	*LAZOR*	2016
L81-6116	*LAZOR*	2007N
L81-6124	*LAZOR*	350609
L81-6132	*LAZOR*	350609
L81-6140	*LAZOR*	221207
L81-6167	*LAZOR*	**473367**
L81-6175	*LAZOR*	494117
L81-6183	*LAZOR*	473812
L81-6191	*LAZOR*	1994
L81-6205	*LAZOR*	1987
L81-6213	*LAZOR*	1990
L81-6248	*LAZOR*	1994
L81-6256	*LAZOR*	223542
L81-6256	*LAZOR*	473823
L81-6264	*LAZOR*	222430
L81-6272	*LAZOR*	2008
L81-6280	*LAZOR*	1990
L81-6299	*LAZOR*	712011
L81-6302	*LAZOR*	2025
L81-6345	*LAZOR*	224820
L81-6353	*LAZOR*	1984
L81-6361	*LAZOR*	222745
L81-6388	*LAZOR*	223830
L81-6426	*LAZOR*	222050
L81-6434	*LAZOR*	710076
L81-6469	*LAZOR*	3771
L81-6477	*LAZOR*	222540
L81-6493	*LAZOR*	1981
L81-6507	*LAZOR*	2016
L81-6515	*LAZOR*	3771
L81-6531	*LAZOR*	712011
L81-6558	*LAZOR*	32X58X8!
L81-6566	*LAZOR*	1979
L81-6590	*LAZOR*	1173
L81-6604	*LAZOR*	223830
L81-6612	*LAZOR*	223542
L81-6620	*LAZOR*	1167
L81-6647	*LAZOR*	1974
L81-6680	*LAZOR*	1128
L81-6698	*LAZOR*	222025!
L81-6728	*LAZOR*	1989
L81-6736	*LAZOR*	1981

! Industrial Size/Type
= The U.S. customer service number is 877-4-TIMKEN. The Canadian customer service numbers are 800-565-4927 (English) and 800-565-0438 (French-Canadian).

Mfr. No.	Name	Zero Duplication or Recommended Industrial
L81-6744	*LAZOR*	1167
L81-6752	*LAZOR*	223240
L81-6779	*LAZOR*	1177
L81-6787	*LAZOR*	1177
L81-6795	*LAZOR*	1177
L81-6817	*LAZOR*	1176
L81-6825	*LAZOR*	1177
L81-6850	*LAZOR*	1959
L81-6868	*LAZOR*	**414045**!
L81-6884	*LAZOR*	1960
L81-6922	*LAZOR*	1956
L81-6930	*LAZOR*	1196
L81-6949	*LAZOR*	494122
L81-6957	*LAZOR*	474134
L81-6981	*LAZOR*	413818
L81-7007	*LAZOR*	1952
L81-7015	*LAZOR*	**473367**
L81-7023	*LAZOR*	1938
L81-7031	*LAZOR*	1952
L81-7040	*LAZOR*	1943
L81-7058	*LAZOR*	1952
L81-7066	*LAZOR*	1949
L81-7082	*LAZOR*	1992
L81-7090	*LAZOR*	225230
L81-7112	*LAZOR*	3771
L81-7139	*LAZOR*	1884
L81-7147	*LAZOR*	1977
L81-7171	*LAZOR*	1188
L81-7198	*LAZOR*	1183
L81-7244	*LAZOR*	1948
L81-7279	*LAZOR*	224015
L81-7295	*LAZOR*	225220
L81-7309	*LAZOR*	710323
L81-7317	*LAZOR*	444116
L81-7325	*LAZOR*	1986
L81-7341	*LAZOR*	1939
L81-7368	*LAZOR*	224015
L81-7384	*LAZOR*	334111
L81-7392	*LAZOR*	226285
L81-7414	*LAZOR*	224210
L81-7430	*LAZOR*	224255
L81-7449	*LAZOR*	224255
L81-7465	*LAZOR*	712551
L81-7473	*LAZOR*	2009
L81-7481	*LAZOR*	2007N
L81-7490	*LAZOR*	2007N
L81-7503	*LAZOR*	4989
L81-7511	*LAZOR*	2003N!
L81-7538	*LAZOR*	225650
L81-7546	*LAZOR*	225540
L81-7554	*LAZOR*	1960
L81-7570	*LAZOR*	1949
L81-7589	*LAZOR*	413818
L81-7619	*LAZOR*	223608
L81-7627	*LAZOR*	320583
L81-7643	*LAZOR*	2025
L81-7653	*LAZOR*	1176
L81-7660	*LAZOR*	1990
L81-7694	*LAZOR*	3771
L81-7708	*LAZOR*	2025
L81-7724	*LAZOR*	1987
L81-7732	*LAZOR*	1992
L81-7732	*LAZOR*	224560
L81-7732	*LAZOR*	224820
L81-7759	*LAZOR*	224820
L81-7767	*LAZOR*	224100
L81-7775	*LAZOR*	5695
L81-7783	*LAZOR*	5696
L81-7791	*LAZOR*	1985
L81-7813	*LAZOR*	224772
L81-7830	*LAZOR*	223543!
L81-7848	*LAZOR*	223608
L81-7864	*LAZOR*	2016
L81-7902	*LAZOR*	223840
L81-7910	*LAZOR*	224570
L81-7929	*LAZOR*	**451845**
L81-7945	*LAZOR*	225230
L81-7961	*LAZOR*	1960
L81-7970	*LAZOR*	1956
L81-7988	*LAZOR*	224560
L81-7996	*LAZOR*	229005
L81-8003	*LAZOR*	710316
L81-8011	*LAZOR*	223800
L81-8062	*LAZOR*	223580
L81-8070	*LAZOR*	1981
L81-8097	*LAZOR*	222742
L81-8100	*LAZOR*	222220
L81-8127	*LAZOR*	222540
L81-8143	*LAZOR*	1990
L81-8151	*LAZOR*	1987
L81-8160	*LAZOR*	223831
L81-8178	*LAZOR*	4901
L81-8194	*LAZOR*	1126
L81-8208	*LAZOR*	1180
L81-8216	*LAZOR*	42X55X8!
L81-8232	*LAZOR*	710097
L81-8259	*LAZOR*	710146
L81-8267	*LAZOR*	5686
L81-8275	*LAZOR*	225035
L81-8283	*LAZOR*	710072
L81-8291	*LAZOR*	239201
L81-8291	*LAZOR*	4175
L81-8305	*LAZOR*	1948
L81-8313	*LAZOR*	225650
L81-8330	*LAZOR*	225872
L81-8348	*LAZOR*	474134
L81-8356	*LAZOR*	710309
L81-8364	*LAZOR*	225875
L81-8372	*LAZOR*	225225
L81-8380	*LAZOR*	224820
L81-8399	*LAZOR*	710194
L81-8410	*LAZOR*	224400
L81-8429	*LAZOR*	224400
L81-8437	*LAZOR*	710098
L81-8445	*LAZOR*	224254
L81-8453	*LAZOR*	1180
L81-8488	*LAZOR*	5131
L81-8640	*LAZOR*	1217
L81-8747	*LAZOR*	**473234**!
L81-8769	*LAZOR*	228250
L81-8852	*LAZOR*	710146
L81-8860	*LAZOR*	225650
L81-8887	*LAZOR*	710072
L81-8909	*LAZOR*	1960
L81-8917	*LAZOR*	710306
L81-8925	*LAZOR*	223240
L81-8933	*LAZOR*	226285
L81-8941	*LAZOR*	710110
L81-8950	*LAZOR*	224210
L81-8976	*LAZOR*	1955
L81-8984	*LAZOR*	710092
L81-9000	*LAZOR*	710337
L81-9305	*LAZOR*	4990
L81-9310	*LAZOR*	224810
L81-9336	*LAZOR*	224235
L81-9344	*LAZOR*	1932
L81-9387	*LAZOR*	225082
L81-9395	*LAZOR*	225230
L81-9409	*LAZOR*	710309
L81-9417	*LAZOR*	710093
L81-9441	*LAZOR*	710107
L81-9450	*LAZOR*	710128
L81-9468	*LAZOR*	710108
L81-9476	*LAZOR*	710072
L81-9484	*LAZOR*	710126
L81-9492	*LAZOR*	710131
L81-9506	*LAZOR*	710176
L81-9514	*LAZOR*	710069
L81-9557	*LAZOR*	1174
L81-9557	*LAZOR*	710309
L81-9565	*LAZOR*	710168
L81-9581	*LAZOR*	320603
L81-9590	*LAZOR*	224820
L81-9603	*LAZOR*	225673
L81-9611	*LAZOR*	4899
L81-9620	*LAZOR*	5700
L81-9638	*LAZOR*	1935
L81-9646	*LAZOR*	1928
L81-9654	*LAZOR*	225230
L81-9662	*LAZOR*	4899
L81-9689	*LAZOR*	1036
L81-9697	*LAZOR*	222830
L81-9708	*LAZOR*	224210
L81-9719	*LAZOR*	224045
L81-9727	*LAZOR*	710147
L81-9727	*LAZOR*	710161
L81-9743	*LAZOR*	494123
L81-9751	*LAZOR*	5131
L81-9760	*LAZOR*	224510
L81-9803	*LAZOR*	225535
L81-9816	*LAZOR*	710292
L81-9829	*LAZOR*	225208
L81-9883	*LAZOR*	4990
L81-9905	*LAZOR*	225450
L81-9913	*LAZOR*	4989
L81-9913	*LAZOR*	710209
L812	*JOHND*	**415001**!
L812C	*JOHND*	**415001**!
L816051	*LAZOR*	224570
L816051	*LAZOR*	45X72X12!
L816108	*LAZOR*	1953
L816108	*LAZOR*	42X60X7!
L816221	*LAZOR*	474133
L816230	*LAZOR*	1214
L816230	*LAZOR*	1214N
L816310	*LAZOR*	1215
L816310	*LAZOR*	1215N
L816310	*LAZOR*	2443
L816329	*LAZOR*	1216
L816329	*LAZOR*	1216N
L816370	*LAZOR*	222745
L816370	*LAZOR*	27X45X8!
L816396	*LAZOR*	225005
L816396	*LAZOR*	50X62X7!
L816400	*LAZOR*	1012
L816400	*LAZOR*	1012N
L816418	*LAZOR*	223255
L816418	*LAZOR*	32X52X7!
L816442	*LAZOR*	223830
L816442	*LAZOR*	38X52X8.5!
L816450	*LAZOR*	223840
L816450	*LAZOR*	38X58X8!
L816485	*LAZOR*	223430
L816485	*LAZOR*	710417
L816540	*LAZOR*	223555
L816540	*LAZOR*	35X64X8!
L816582	*LAZOR*	223542
L816582	*LAZOR*	35X55X11!
L816639	*LAZOR*	224045
L816639	*LAZOR*	40X62X12!
L816655	*LAZOR*	224270
L816655	*LAZOR*	42X72X10!
L816663	*LAZOR*	224045
L816663	*LAZOR*	40X62X12!
L816671	*LAZOR*	1181
L816671	*LAZOR*	41X56X7!
L816701	*LAZOR*	222535
L816701	*LAZOR*	25X38X7!
L816760	*LAZOR*	223542
L816760	*LAZOR*	35X55X11!
L816809	*LAZOR*	223840
L816809	*LAZOR*	38X58X8!
L816833	*LAZOR*	1180
L816833	*LAZOR*	41X55X7!
L816841	*LAZOR*	224560
L816841	*LAZOR*	45X68X7!
L816906	*LAZOR*	1955
L816906	*LAZOR*	52X65X9!
L816965	*LAZOR*	225010
L816965	*LAZOR*	50X65X8!
L816973	*LAZOR*	1973
L816973	*LAZOR*	48X65X10!
L817074	*LAZOR*	**1213N**
L817155	*LAZOR*	1973
L817155	*LAZOR*	48X65X10!
L817180	*LAZOR*	1174
L817180	*LAZOR*	38X52X8.5!
L817252	*LAZOR*	224820
L817252	*LAZOR*	48X62X8!
L817260	*LAZOR*	1948
L817260	*LAZOR*	50X68X8!
L817287	*LAZOR*	55X82X12!
L817333	*LAZOR*	226285
L817333	*LAZOR*	62X85X8!
L817350	*LAZOR*	**1213N**
L817376	*LAZOR*	1181
L817376	*LAZOR*	41X56X7!
L817406	*LAZOR*	223605
L817406	*LAZOR*	36X50X7!
L817520	*LAZOR*	225110
L817520	*LAZOR*	51X65X7!
L817562	*LAZOR*	1174
L817562	*LAZOR*	38X52X8.5!
L817635	*LAZOR*	**1213N**
L818186	*LAZOR*	225875
L818186	*LAZOR*	58X75X11!
L818240	*LAZOR*	**1213N**
L819360	*LAZOR*	1207
L819360	*LAZOR*	1207N
L819951	*LAZOR*	1216
L819951	*LAZOR*	1216N
L82	*LETN*	**415991**
L82	*LETN*	455146!
L83	*LETN*	**415991**
L83	*LETN*	455146!
L8477	*FWD*	416163
L851	*LETN*	**416288**!
L852	*LETN*	**416288**!
L9	*LETN*	**417316**!
L90	*LETN*	**416339**
L90	*LETN*	455031!
L901019TD	*SPG*	39807
L901620TD0	*SPG*	39880
L901620TD1	*SPG*	39881
L901644TD	*SPG*	39701
L902524TD2	*SPG*	39044
L903	*LETN*	**416339**
L903	*LETN*	455031!
L904087TD0	*SPG*	904087
L904301TDR	*SPG*	**470898**
L904365TB	*SPG*	39723
L904378TD	*SPG*	39825
L907025TD1	*SPG*	39801
L907042TD1	*SPG*	39888
L907059TD	*SPG*	39888
L907059TD2	*SPG*	39888
L907087TD	*SPG*	39899
L907087TD0	*SPG*	39899

! Industrial Size/Type

Mfr. No.	Name	Zero Duplication or Recommended Industrial
L907088TD2	SPG	39885
L907091TD	SPG	5721
L907091TD	SPG	907091
L907148TD0	SPG	907148
L907155TD	SPG	907155
L907158TD0	SPG	39889
L911011TD	SPG	911011
L9116	GERL	472397!
L9117	GERL	470059
L9117	GERL	470380!
L914411TDR	SPG	914411
L914412TDR	SPG	914412
L917009TD	SPG	39608
L917034TD	SPG	917034
L917117TD0	SPG	917117
L917157TD	SPG	917157
L921648TD	SPG	39815
L924371TD	SPG	924371
L924380TD	SPG	39827
L924404TD	SPG	924404
L927013TD	SPG	927013
L927112TD0	SPG	927113
L927120TD	SPG	927120
L927312TD	SPG	927312
L93	LETN	471689!
L934	JOHND	472924!
L941018TD	SPG	600016
L941619TD1	SPG	39880
L944211TD	SPG	471192
L944387TD	SPG	39732
L947061TD0	SPG	39889
L947061TD2	SPG	39889
L947090TD	SPG	5722
L947090TD	SPG	947090
L947090TD0	SPG	947090
L947193TD	SPG	947193
L952537TDI	SPG	39861
L9578	GERL	473245!
L977105TD	SPG	977105
L977168TX0	SPG	600361
L9780	LETN	473426
L9791	LETN	471442!
L997101TD	SPG	997101
LA09010088	LOKWD	473237!
LA1019	MASSE	450332
LA1020	MASSE	470059
LA1020	MASSE	470380!
LA1139	MASSE	473231
LA1316	MASSE	473197
LA33560B	FORD	471413!
LA33562B	FORD	471267!
LA33565A	FORD	471466!
LA33623A	FORD	470954
LA4961	PETTI	472012
LA49610	PETTI	417022
LA49611	PETTI	417602!
LA49612	PETTI	417546!
LA49615	PETTI	455614
LA49619	PETTI	455406!
LA4963	PETTI	473016!
LA4964	PETTI	472439
LA4966	PETTI	471442!
LA4967	PETTI	472572!
LA4969	PETTI	417487
LA7246	PETTI	40071S
LC11962	MWKEL	471787
LC2P150	GE	471224!
LD10780	MWKEL	474278
LD11360	MARMO	415035
LD11361	MARMO	471750!
LD1360	MARMO	417210!
LD21165	MARMO	472572!
LD21361	MARMO	471192
LD61133	MARMO	471141!
LD71368	MARMO	323138!
LF1190A	FORD	203006!
LF1190A1	FORD	203006!
LF4676A	FORD	5778
LH340442	MIHLE	450165
LH340442	MIHLE	471801!
LH340566	MIHLE	471504
LH340761	MIHLE	415027
LH340761	MIHLE	415027!
LM227	WHITE	343185
LM337	WHITE	5976S
LM5	BARRE	203034
LM664	WHITE	471231!
LR1301	PETTI	417316!
LR1302	PETTI	415991
LR1302	PETTI	455146!
LW6M207	CONTI	470954!
M00083042	FWD	473231!
M044032195	LEECE	473016!
M054031763	LEECE	450340
M054031769	LEECE	473414
M054032169	LEECE	471760
M054034270	LEECE	473238
M054073498	LEECE	240733
M1037	TW-DI	415085!
M1037	TW-DI	456648
M104	TW-DI	471554!
M105	TW-DI	473215!
M1056	TW-DI	471649!
M105A	TW-DI	473215!
M105B	TW-DI	473215
M105TD	CASE	473215!
M106	TW-DI	472185!
M107	TW-DI	474281!
M108	TW-DI	470088=
M109	TW-DI	473462
M110	TW-DI	415001!
M111	TW-DI	416288!
M1110	OLIVE	415458!
M1110	WHITE	415458!
M112	OLIVE	415027!
M112	OLIVE	415027
M112	TW-DI	415027
M113	TW-DI	415047
M1153	TW-DI	410987!
M1154	TW-DI	471766!
M1160	TW-DI	472144!
M1169	TW-DI	455198N=
M1181	TW-DI	455321
M1182A	TW-DI	415035
M1182C	TW-DI	415035
M1183	TW-DI	45013S
M1189	TW-DI	416891!
M1194	TW-DI	471760
M1206	TW-DI	412943
M121	TW-DI	415025
M122	TW-DI	415458!
M1226	TW-DI	471763
M123	TW-DI	473462
M124	TW-DI	413469!
M126C	TW-DI	415035
M126C	TW-DI	415035!
M136	MANT	415035
M1360	TW-DI	415035
M1360	TW-DI	415035!
M136A	PACIF	415035
M136A	TW-DI	415035
M136D	TW-DI	415035
M137	OLIVE	415995!
M137	TW-DI	415995!
M138	TW-DI	470530!
M138A	TW-DI	472397!
M1443	OLIVE	415483!
M1462	TW-DI	473234
M1510	NORDG	471649!
M1523	TW-DI	471571
M154	MINNM	455336
M1585	GRAY	471766!
M1585	TW-DI	417191
M1585	TW-DI	456585
M1585A	TW-DI	417191
M1585A	TW-DI	455165!
M16516	FAFNI	353120
M17824	JOHND	204020
M17824	JOHND	204505!
M1804	TW-DI	471271!
M1854A	TW-DI	415142
M1856	TW-DI	415142
M1856A	TW-DI	415142
M1868	TW-DI	471413!
M1875	TW-DI	410825
M1926	TW-DI	471648
M1984	TW-DI	470625!
M2-L117A	BR-WN	471224!
M200	MINNM	450400
M201093	TW-DI	471272
M201094	TW-DI	471504=
M201105	TW-DI	240736
M201105TD	KEN	240736
M201189	TW-DI	455040N=
M201190	TW-DI	415351=
M201191	TW-DI	416865
M201224	TW-DI	473464=
M201290	TW-DI	473229
M201293	TW-DI	471795
M201305	TW-DI	455271N=
M201312	TW-DI	450593!
M201433	MINNM	40316S
M201433	TW-DI	40316S
M201448	TW-DI	417344!
M201482	TW-DI	417316=
M201486	TW-DI	417191
M201486	TW-DI	455165!
M201518	KEN	415035
M201518	PACIF	415035
M201518	TW-DI	415035
M201534	TW-DI	471870!
M201535	TW-DI	415984!
M201539	TW-DI	417487!
M201539	TW-DI	417487
M201539A	TW-DI	417487!
M201539A	TW-DI	417487
M201570	TW-DI	471554=
M201576A	PACIF	415991
M201576A	PACIF	415991!
M201576A	TW-DI	415991
M201576A	TW-DI	415991!
M201586	TW-DI	415984=
M201589	TW-DI	415984!
M20231	VICK	470530!
M2100	TW-DI	450202N=
M21015	VICK	471787!
M2130	KEN	472016
M2130	TW-DI	472016
M2134	TW-DI	416476=
M2136A	BR-WN	5711
M21512	FORD	471538!
M21512	VICK	471538!
M2154	TW-DI	415273N=
M2164	TW-DI	240731
M2166	TW-DI	415303!
M2183	TW-DI	417262*=
M2187	TW-DI	415040N=
M2190	TW-DI	100494
M2190	TW-DI	476470!
M2190A	TW-DI	476470
M2192	TW-DI	415200N=
M2192A	TW-DI	416888
M2200	TW-DI	417497
M2201	TW-DI	471763
M2219	TW-DI	415273N=
M2221	TW-DI	417487!
M2221	TW-DI	417487
M2222	TW-DI	472560N
M22229	IH	471750!
M2224	TW-DI	40185
M2226	NORDG	411245!
M2230	TW-DI	473227=
M2234	TW-DI	415302
M2239	TW-DI	417316!
M2240	TW-DI	415995!
M22440	IH	476838!
M2251	TW-DI	415053N=
M2251B	TW-DI	415138!
M2252	TW-DI	415995!
M2253	TW-DI	470565=
M2257A	TW-DI	415449
M2258	TW-DI	472636
M226	TW-DI	410694!
M2272A	TW-DI	415963N=
M22811	VICK	415991
M22811	VICK	455146!
M22918	VICK	470954!
M2295	TW-DI	473238=
M2295A	TW-DI	473238
M23172	VICK	471766!
M2347	TW-DI	415104N=
M2356	KEN	415389
M2356	PACIF	415389
M2356	TW-DI	415389
M2371	TW-DI	100494
M2371	TW-DI	476470!
M2399	TW-DI	470530
M2406	TW-DI	100494
M2406	TW-DI	476470!
M2408	TW-DI	472636=
M2417	TW-DI	471224=
M2421	TW-DI	471413
M2423	TW-DI	412861
M24244	DAVEY	472397!
M2426	TW-DI	415984=
M24286	DAVEY	472164!
M2429	TW-DI	471466=
M2430	TW-DI	471224=
M24407	DAVEY	410496!
M24469	VICK	416273!
M2449	TW-DI	415995!
M2453	TW-DI	471692=
M2494	TW-DI	415913N=
M2505	TW-DI	240319
M2515	TW-DI	412119
M2530	TW-DI	415498=
M2553	TW-DI	416287N=
M2558	TW-DI	472636!
M2571	TW-DI	417350=
M25931	VICK	415991
M25931	VICK	415991!
M2606A	TW-DI	470954!
M2609	TW-DI	473010
M2621A	TW-DI	411509N
M2622A	TW-DI	471507N=
M2650	TW-DI	472157=
M2676	TW-DI	472157=
M2685	TW-DI	411245=

! Industrial Size/Type * Minor Width Difference

= The U.S. customer service number is 877-4-TIMKEN. The Canadian customer service numbers are 800-565-4927 (English) and 800-565-0438 (French-Canadian).

Mfr. No.	Name	Zero Duplication or Recommended Industrial
M2685A	TW-DI	**411245**=
M2686A	TW-DI	J1114=
M2686AA	TW-DI	J1267=
M2686AD	TW-DI	JX845=
M2686B	TW-DI	J1126
M2686C	TW-DI	J1127
M2686D	TW-DI	J1125
M2686E	TW-DI	J1133=
M2686F	TW-DI	J1129
M2686G	TW-DI	J1128
M2686H	TW-DI	J1109
M2686J	TW-DI	J1117
M2686K	TW-DI	J1136
M2686L	TW-DI	J1121
M2686M	TW-DI	J1123
M2686N	TW-DI	J1130
M2686Q	TW-DI	J1118
M2686S	TW-DI	J1120=
M2686T	TW-DI	J1134
M2686U	TW-DI	J1122
M2686V	TW-DI	J1132
M2686X	TW-DI	J1107
M2686Y	TW-DI	J1119
M2686Z	TW-DI	J1105
M2695	TW-DI	**416345**!
M2695A	TW-DI	415033N=
M2701	TW-DI	**417605**
M2714	TW-DI	**415458**
M2716	TW-DI	**416666**
M27180N	JOHND	204029
M27180N	JOHND	204507!
M2718D	JOHND	450398
M2718D	JOHND	**471267**!
M2718DM	JOHND	204029
M2718DM	JOHND	204507!
M2731	TW-DI	**471192**=
M2735	TW-DI	416342N=
M2779	TW-DI	**455134**!
M2800	TW-DI	**471271**!
M2806	TW-DI	**415988**
M2806A	TW-DI	**415988**=
M2807	TW-DI	**416364**!
M2815	TW-DI	**471442**!
M2867	TW-DI	**472015**!
M2876	TW-DI	**476470**
M2876	TW-DI	**476470**!
M2897	TW-DI	**471689**=
M2911	TW-DI	**415551**=
M2933	TW-DI	**472636**=
M2966	TW-DI	**416865**
M2970	TW-DI	**415327**=
M305308	GWI	**471224**!
M305924	GWI	**470898**
M315	TW-DI	**417316**!
M3161	JA-HE	240457
M3162	JA-HE	6597S
M325529BG	SPG	60X90X10
M325589VGV	SPG	229210
M340417R91	IH	**410708**
M34401	MATHR	39821
M35156R	MATHR	39835
M35320R	MATHR	**415937**
M3536	CONST	**471887**
M35751R	MATHR	39732
M35753R	MATHR	**472409**
M358	TW-DI	**416654**!
M35940	MATHR	39715
M35942	MATHR	39815
M35957R	MATHR	39823
M35970R	MATHR	39827
M35994R	MATHR	**417433**
M36074R	MATHR	39837
M36119R	MATHR	39713
M36386	MATHR	39849
M36387R	MATHR	**470898**
M36388R	MATHR	**470898**
M36390	MATHR	**473517**
M36391R	MATHR	39849
M36392R	MATHR	39701
M36393R	MATHR	**473517**
M36425R	MATHR	**472311**
M36473R	MATHR	39705
M36476R	MATHR	**415937**
M36521R	MATHR	39723
M36558R	MATHR	39817
M36689R	MATHR	39887
M36689R	SPG	39887
M36690R	MATHR	39888
M36690R	SPG	39888
M36761R	MATHR	39825
M36985R	MATHR	39801
M36985R	SPG	39801
M37001	MATHR	39803
M37022	MATHR	39958
M37098R	MATHR	**417621**
M37103R	MATHR	39894
M37104R	MATHR	39893
M37269R	MATHR	39956
M37312R	MATHR	39952
M37371R	SPG	39879
M37586	SPG	37586
M37753R	MATHR	39885
M37753R	SPG	39885
M37759R	MATHR	39890
M37759R	SPG	39890
M37760R	MATHR	39889
M37760R	SPG	39889
M37796	MATHR	39861
M37797	MATHR	39869
M37800	MATHR	39865
M37809R	SPG	39899
M37810R	SPG	39900
M37817R	MATHR	**472409**
M37921RC	SPG	**455134**
M37939R	SPG	**415035**
M380009TD	SPG	**417506**
M380023TXO	SPG	380023A
M380025TXO	SPG	**416158**
M380047TD	SPG	380047A
M380048TA	SPG	380048A
M380069TD	SPG	380069A
M38308R	MATHR	**472409**
M38613	PI-BA	944416
M38756R	MATHR	39925
M38760	MATHR	39886
M38760R	SPG	39886
M38832	SPG	**471267**
M38833	MATHR	39904
M38926R	MATHR	**415303**
M38926R	SPG	**415303**
M38935R	MATHR	39930
M38936R	MATHR	39920
M39041	SPG	39882
M39044	NATL	39883
M39044R	SPG	39044
M39054R	SPG	39926
M39071	SPG	39881
M39088R	MATHR	39806
M39089R	MATHR	39805
M39094	MATHR	39815
M39094	SPG	39815
M39140R	SPG	**471192**
M39157R	MATHR	39804
M39285	MATHR	39807
M39404	SPG	73478=
M39448	MATHR	**417433**
M39539	SPG	**470898**
M39547	SPG	**473517**
M39549	SPG	**470898**
M39558	SPG	39701
M39592	SPG	39849
M39632	SPG	39861
M39990	SPG	41163T
M401	TW-DI	**450084**!
M40197	SPG	39880
M40281	SPG	39887
M40282	SPG	39888
M40375	SPG	40375
M40392R	SPG	40392
M40403	MATHR	380003A
M40403B	MATHR	370001T
M40413	MATHR	380001A
M40413G	MATHR	370001A
M40554	MATHR	**416158**
M40554B	MATHR	370025T
M40655R	SPG	39882
M40676	JOHND	**252277**
M40902	SPG	40902
M41050	JOHND	**471643**!
M41121-53	SPG	914413
M41186-53	SPG	914411
M41189-53	SPG	914412
M413	TW-DI	**411253**!
M41381R	SPG	5721
M41381R	SPG	5722
M41381R	SPG	907091
M41453	MATHR	40392
M41453	SPG	40392
M41454	MATHR	37586
M417	TW-DI	**473229**
M417TD	CASE	**473229**
M42	TMTR	**472924**!
M42015	IH	**473426**
M4209	CONST	**471264**
M42523	IH	**471827**!
M436	HUME	200354
M440	GRAY	**412473**!
M440	TW-DI	**412473**
M446	TW-DI	476424N
M44888	JOHND	**471267**!
M49123	JOHND	**471766**!
M498	TW-DI	**471224**
M4K5438	CATER	**473244**!
M4X4047	CATER	**470487**!
M4X4051	CATER	**473367**
M50149A	BR-WN	**472924**!
M510	TW-DI	**472409**=
M552	TW-DI	**415449**!
M552A	TW-DI	**415449**
M5610	BARTL	**471192**
M5621	BARTL	**471651**
M581	FORD	**481568**!
M600462	SPG	600462
M600K-253	CONTI	**471554**!
M600K-257	CONTI	**471649**!
M600L-214	CONTI	**412119**!
M600L354	CONTI	485869N=
M60478	ALLCH	**471689**!
M605	TW-DI	**472179**
M605A	TW-DI	**472179**
M61872	ALLCH	**473474**
M61958	JOHND	200851
M64107	JOHND	203025
M671	TW-DI	**473228**
M6SK136A	BR-WN	**471272**!
M7041266	MARMO	240735
M74054261	GE	**416865**!
M74054262	GE	**415090**
M74054263	GE	**417556**
M74054264	GE	**416107**!
M74054264	GE	455073
M74054265	GE	**455584**
M74054266	GE	**416239**!
M77099	MATHR	39920
M805	TW-DI	**417191**
M805	TW-DI	455165!
M806	TW-DI	**476470**
M848	TW-DI	**455026**
M849	TW-DI	**416125**!
M86688	IH	**471192**
M86690	IH	**472185**!
M979	MINNM	**476470**
MA103220	CHRYS	**473258**
MA103453	CHRYS	**471076**
MA103454	CHRYS	221720
MA125844	CHRYS	1196
MA181498	CHRYS	1955
MA181498	CHRYS	52X65X9!
MA183	TW-DI	**415294**!
MA188	TW-DI	**416888**
MA188A	TW-DI	**416888**!
MA210	TW-DI	**417487**!
MA210	TW-DI	**417487**
MA220	TW-DI	**471413**=
MA223	TW-DI	455107N=
MA257	TW-DI	**415483**
MA262	TW-DI	**476470**!
MA267	TW-DI	416289N=
MA270	TW-DI	**473204**=
MA273	TW-DI	**417605**
MA287	TW-DI	**470530**
MA288	TW-DI	**472636**=
MA297	TW-DI	**415995**!
MA306	TW-DI	**416654**
MA319	TW-DI	**413248**=
MA340	TW-DI	**450339**=
MA349	TW-DI	**472258**!
MA350	PARGN	**415449**=
MA350	TW-DI	**415449**=
MA361	TW-DI	**415984**=
MA365	TW-DI	**417605**=
MA366	PARGN	**473215**=
MA366	TW-DI	**473215**=
MA369	TW-DI	**472492**=
MA372	TW-DI	**415991**
MA372	TW-DI	**415991**!
MA387	TW-DI	**473214**=
MA398	TW-DI	455165N=
MA415	TW-DI	**415995**!
MA416	TW-DI	**476470**
MA416	TW-DI	**476470**!
MA431	TW-DI	**417361**=
MA439	TW-DI	**416865**
MA440	TW-DI	**417365**=
MA452	TW-DI	456483=
MA470	TW-DI	**55301S**
MA472	TW-DI	100494
MA472	TW-DI	**476470**!
MA497	TW-DI	456055N=
MA516	TW-DI	485033V=
MA517	TW-DI	**472015**=
MA523	TW-DI	**415449**=
MA524	TW-DI	**415035**
MA525	TW-DI	**415995**!
MA528	TW-DI	3893V!
MA528	TW-DI	**415379**!
MA564	TW-DI	**417344**
MA583	TW-DI	3276=

! Industrial Size/Type
= The U.S. customer service number is 877-4-TIMKEN. The Canadian customer service numbers are 800-565-4927 (English) and 800-565-0438 (French-Canadian).

Mfr. No.	Name	Zero Duplication or Recommended Industrial
MA598	TW-DI	**415991**
MA598	TW-DI	455146!
MA623	TW-DI	**415725**!
MA659	TW-DI	100495
MA659	TW-DI	**417349**
MA685A	TW-DI	**415294***=
MA738	TW-DI	**473010**
MA743	TW-DI	**455134**=
MA744	TW-DI	**416865**
MA745	TW-DI	**415984**!
MA764	TW-DI	**471341**!
MA778	TW-DI	**471466**!
MA798	TW-DI	415983N!
MA875	TW-DI	**416865***=
MA876	TW-DI	**411245***=
MA877	TW-DI	**415984***=
MB001170	CHRYS	**473258**
MB002074	CHRYS	494122
MB076351	CHRYS	221830
MB092145	CHRYS	224255
MB092145	CHRYS	42X65X10!
MB092186	CHRYS	474161
MB092288	CHRYS	481826
MB092296	CHRYS	224255
MB092296	CHRYS	42X65X10!
MB092436	CHRYS	2003N!
MB092437	CHRYS	225010
MB092527	CHRYS	223550
MB160578	CHRYS	224255
MB160578	CHRYS	42X65X10!
MB160850	CHRYS	710146
MB160946	CHRYS	710213
MB160949	CHRYS	224570
MB166582	CHRYS	710273
MB242821	CHRYS	710338
MB242821	VILA	710338
MB242822	CHRYS	38X52X8.5!
MB242822	CHRYS	710338
MB242822	VILA	710338
MB290013	CHRYS	**451845**
MB290426	CHRYS	710152
MB290739	CHRYS	225875
MB290739	CHRYS	58X75X11!
MB297514	CHRYS	225875
MB297514	CHRYS	58X75X11!
MB303867	CHRYS	225082
MB303875	CHRYS	225230
MB350906	CHRYS	223215
MB393807	CHRYS	710152
MB393929	CHRYS	**473258**
MB393932	CHRYS	223543!
MB412315	CHRYS	**481481**
MB501649	CHRYS	222036
MB526395	CHRYS	225875
MB526535	CHRYS	710186
MB526680	CHRYS	710221
MB553349	CHRYS	710272
MB569924	CHRYS	710207
MB569925	CHRYS	710208
MB573309	CHRYS	225450
MB584601	CHRYS	710338
MB584601	VILA	710338
MB584745	CHRYS	494122
MB620515	CHRYS	224874
MB633432	CHRYS	710182
MB633434	CHRYS	710183
MB633944	CHRYS	474134
MB636433	CHRYS	221620
MB664439	CHRYS	4989
MB664439	CHRYS	710209
MB808443	CHRYS	8430S
MB808444	CHRYS	4898
MB837029	CHRYS	710353
MB837719	CHRYS	4989
MB837719	CHRYS	710209
MBP0511312	FORD	228250
MBP0511312	FORD	710448
MBS-940	NATL	2377
MC1190A	FORD	6815
MC33587A	FORD	240151
MC4676A	FORD	5778
MCX212	CLIMX	**415937**!
MCX213	CLIMX	**416865**!
MCX214	CLIMX	**417487**
MCX423	CLIMX	**417191**
MCX423	CLIMX	455165!
MCX661	CLIMX	**416364**=
MCX662	CLIMX	415104N=
MCX733	CLIMX	240733
MCX74	CLIMX	**416654**!
MD-2341	MURPH	J1141
MD-4059	MURPH	**415074**
MD000248	CHRYS	227235
MD008762	CHRYS	3771
MD008882	CHRYS	224460
MD008883	CHRYS	710325
MD009038	CHRYS	221710
MD016549	CHRYS	227235
MD020240	CHRYS	228005
MD020435	CHRYS	228005
MD024529	CHRYS	222330
MD030789	CHRYS	712001
MD031837	CHRYS	223018
MD050605	CHRYS	221710
MD050608	CHRYS	712007
MD068906	CHRYS	424
MD069947	CHRYS	228005
MD069948	CHRYS	221710
MD069949	CHRYS	224460
MD069950	CHRYS	712007
MD090761	CHRYS	223010
MD095355	CHRYS	222025!
MD096264	CHRYS	222025!
MD101915	CHRYS	710056
MD117643	CHRYS	227235
MD120699	CHRYS	710056
MD120700	CHRYS	223750
MD133317	CHRYS	3771
MD1462	MURPH	**450593**!
MD150161	CHRYS	228009
MD15127	MURPH	473414
MD151463	CHRYS	222820
MD152603	CHRYS	223010
MD153103	CHRYS	3771
MD153104	CHRYS	223018
MD16239	MURPH	**471570**!
MD168055	CHRYS	223750
MD168057	CHRYS	222025!
MD168058	CHRYS	221710
MD168060	CHRYS	222820
MD168061	CHRYS	224460
MD174462	CHRYS	224460
MD174940	CHRYS	710235
MD180183	CHRYS	223010
MD2946	MURPH	**471554**!
MD301007	CHRYS	223018
MD339026	CHRYS	223018
MD3488	MURPH	**473446**
MD359158	CHRYS	710235
MD372248	CHRYS	223018
MD4044	MURPH	**471472**!
MD4066	MURPH	**416271**!
MD505608	CHRYS	712007
MD5120	MURPH	**416339**
MD5120	MURPH	455031!
MD610203	CHRYS	2025
MD701430	CHRYS	32X48X8!
MD701721	CHRYS	710222
MD701732	CHRYS	223240
MD701735	CHRYS	25X35X7!
MD701735	CHRYS	712007
MD701782	CHRYS	223240
MD701782	CHRYS	32X48X8!
MD703735	CHRYS	223014
MD703743	CHRYS	223608
MD703743	CHRYS	36X52X7!
MD704164	CHRYS	224560
MD706433	CHRYS	223543
MD706433	CHRYS	35X56X10!
MD707184	CHRYS	223543
MD707184	CHRYS	35X56X10!
MD707575	CHRYS	320583
MD711769	CHRYS	224550
MD712012	CHRYS	223608
MD719710	CHRYS	710199
MD723202	CHRYS	223014
MD731708	CHRYS	224052
MD741818	CHRYS	712007
MD742053	CHRYS	710259
MD94630X	MURPH	**415294**!
MD950349	CHRYS	**473445**
MD950716	CHRYS	**473445**
MD950807	CHRYS	1097N
MDS65	VICK	**470954**!
MF07013	RACIN	50199S!
MF07013	RACIN	6863S!
MF091	RACIN	**472179**
MH034067	CHRYS	223255
MH60358	ALLCH	**472287**!
MJA-HH-101	SPICE	477163N
MK102	COC	455197N
MK1190A	FORD	9150S
MK173	COC	**473179**
MM174160	MURPH	**416107**!
MM174160	MURPH	455073
MM273336	MURPH	**416664**!
MMI73262	MURRA	**470530**!
MMI73336	MURRA	**416664**!
MMI73377	MURRA	**417316**!
MMI73836	MURRA	**415035**
MMI73836	MURRA	**415035**!
MO54032189	LEECE	**471192**
MO54034270	LEECE	**473238**!
MO54073498	LEECE	240733
MOO508562	FWD	**415960**
MOO508587	FWD	**415449**!
MOO65943	FWD	**455005**
MOOO83029	FWD	**473448**
MOOO83030	FWD	**415458**!
MOOO83031	FWD	**415458**!
MOOO83032	FWD	**471652**
MOOO83037	FWD	**417316**!
MOOO83038	FWD	**473243**
MOOO83045	FWD	**455080**
MP747	ADAMS	**470088**
MS-20124A	BR-WN	**472164**!
MS128	MIRCO	16202
MS20149A	BR-WN	455556
MS221	MIRCO	16210
MS222	MIRCO	16204
MS2231	MIRCO	16200
MS2241	MIRCO	16201
MS225	MIRCO	16208
MS2262	MIRCO	16213
MS227	MIRCO	16211
MS228	MIRCO	16202
MS2281	MIRCO	16212
MS2282	MIRCO	16215
MS2291	MIRCO	16203
MS230	MIRCO	16205
MS232	MIRCO	16209
MS235	MIRCO	16217
MS237	MIRCO	16216
MS331	MIRCO	16250
MS332	MIRCO	16251
MS333	MIRCO	16252
MS334	MIRCO	16253
MS334G	MIRCO	16254
MS335	MIRCO	16255
MS336	MIRCO	16256
MS337	MIRCO	16257
MS338	MIRCO	16258
MS339	MIRCO	16259
MS340	MIRCO	16260
MS341	MIRCO	16261
MS342	MIRCO	16262
MS343	MIRCO	16263
MS344	MIRCO	16264
MS345	MIRCO	16265
MS347	MIRCO	16267
MS352	MIRCO	16268
MS356	MIRCO	16269
MS5100040-3	KEN	**417316**=
MS5100090-3	CHRYS	**470898**=
MS9444A	BR-WN	**415187**
MST222	MIRCO	16308
MST223	MIRCO	16309
MST226	MIRCO	16310
MST227	MIRCO	16311
MST228	MIRCO	16312
MST331	MIRCO	16300
MST332	MIRCO	16301
MST333	MIRCO	16302
MST334	MIRCO	16303
MST335	MIRCO	16306
MST339	MIRCO	16304
MST341	MIRCO	16305
MST352	MIRCO	16315
MST356	MIRCO	16316
MT141132	CHRYS	225010
MT203648	CHRYS	224570
MT203648	CHRYS	45X72X12!
MT2040H27	JA-MI	**470682**
MT2040H27	JAE	**470682**
MT2044S	CASE	**471649**!
MT2226S	CASE	**471354**!
MTA2032S	CASE	204038
MTA2043S	CASE	204002
MU149A	BR-WN	**471689**=
MU149A	CHRYS	**471689**!
MU7134A	BR-WN	**352541**
MU7149A	BR-WN	**415449**!
MW2896	WHITE	340797
MW3277	WHITE	**254270**
MW3348	WHITE	**471267**!
MW479	WHITE	240027=
MW7134A	BR-WN	**352541**
MW92	WHITE	**471532**
MX49867	JOHND	**415035**!
MX49867	JOHND	**415035**
MX50069	JOHND	**470530**!
MX51278	JOHND	**471192**
MX54694	JOHND	**415138**!
MX60635	JOHND	**471646**!
MX60922	JOHND	**415138**!
MX60935	JOHND	**471646**!
MX61829	JOHND	**471570**!
MX61943	JOHND	**472185**!

! Industrial Size/Type * Minor Width Difference

= The U.S. customer service number is 877-4-TIMKEN. The Canadian customer service numbers are 800-565-4927 (English) and 800-565-0438 (French-Canadian).

Mfr. No.	Name	Zero Duplication or Recommended Industrial
MX62601	*JOHND*	**415449**!
MX62870	*JOHND*	**417344**!
MX63090	*JOHND*	**415035**!
MX63090	*JOHND*	**415035**
MX73464	*JOHND*	**471570**!
MX87356	*JOHND*	40169S
MX97713	*JOHND*	**415303**!
MXO1111	*COC*	**455189**
MXO1187	*COC*	**470712**!
MXO1189	*COC*	**470712**!
MXS388	*COC*	**471281**!
MXS826	*COC*	**470354**
N-12360	*SEALD*	712025
N-3094	*SEALD*	712022
N-3101	*SEALD*	712021
N-4940	*SEALD*	**330699**
N-6184	*SEALD*	**471466**!
N-6229	*SEALD*	**471466**
N-7434	*SEALD*	**470954**
N-7449	*SEALD*	**470954**
N-8665	*SEALD*	**471267**
N-9700	*SEALD*	712018
N-9805	*SEALD*	712012
N-9814	*SEALD*	**252277**
N-9843	*SEALD*	**471224**
N-9967	*SEALD*	**471689**
N10566	*MID-R*	**471554**!
N10813	*MID-R*	**471649**!
N10919	*MID-R*	50199S!
N10919	*MID-R*	6863S!
N10919A	*MID-R*	**471103**!
N10919B	*MID-R*	**471442**!
N10919C	*MID-R*	50199S!
N10919C	*MID-R*	6863S!
N10981	*MID-R*	**471192**
N10981D	*MID-R*	**471224**!
N109913	*JOHND*	**473214**!
N11431	*MID-R*	50327
N115080B	*FORD*	**415001**!
N1162B	*EATON*	**415034**=
N1162C	*EATON*	**416294**!
N128	*CASE*	**473229**
N12948	*MID-R*	**471192**
N130664	*JOHND*	**471413**
N136	*BUTBN*	**472179**
N137	*BUTBN*	**417205**!
N137	*NORDG*	**450188**
N14357	*CASE*	40169S
N148	*BUTBN*	**471689**!
N151	*BUTBN*	**471567**!
N1800303	*SPICE*	J1130
N1800303	*VIC*	J1130
N1851	*FORD*	**471466**!
N1851	*MID-R*	**471466**!
N24243	*DAVEY*	**410102**
N317	*NORDG*	**450188**
N3478	*DIA*	6592S=
N3502	*CASE*	**473215**!
N3503	*CASE*	**450765**!
N4152A	*WAYNE*	**471763**
N4478	*DIA*	**415697**!
N4478	*DIA*	455547
N4517	*CASE*	**471737**=
N5089	*CASE*	**471808**!
N5091	*CASE*	**450984**
N5177	*JOHND*	**471766**!
N5178D	*JOHND*	**472311**!
N55008	*DOMGA*	321460
N55044	*DOMGA*	472341!
N5586	*CASE*	240735
N5587	*CASE*	**472311**!
N5696D	*JOHND*	**471413**
N56B206	*CONTI*	**412473**!
N6285D	*JOHND*	**470625**!
N62C204	*CONTI*	**474272**!
N6787D	*JOHND*	**471737**=
N7005B	*FORD*	480491
N7172D	*JOHND*	**473227**
N7174D	*JOHND*	**471795**
N7361D	*JOHND*	**472560N**!
N7504	*HU-WR*	**415138**!
N7535	*HU-WR*	**473231**
N7841	*CASE*	370094A
N816123	*WGEAR*	40401
N920225	*LUF*	**472185**!
NA-773	*PAYEN*	**473244**
NA-933	*PAYEN*	712137
NA-980	*PAYEN*	712135
NA115	*PAYEN*	222510
NA132	*PAYEN*	**472397**!
NA142	*PAYEN*	222030
NA151	*PAYEN*	223800
NA174	*PAYEN*	**472354**
NA271	*PAYEN*	**451948**
NA296	*PAYEN*	**473210**
NA297	*PAYEN*	710058
NA300	*PAYEN*	**473234**
NA328	*PAYEN*	**451857**
NA329	*PAYEN*	**473231**
NA354	*PAYEN*	**471870**!
NA355	*PAYEN*	224045
NA355	*PAYEN*	40X62X12!
NA378	*PAYEN*	225040
NA425	*PAYEN*	1960
NA433	*PAYEN*	1198
NA453	*PAYEN*	1174
NA461	*PAYEN*	1012
NA461	*PAYEN*	1012N
NA473	*PAYEN*	**472655**
NA512	*PAYEN*	**471854**!
NA551	*PAYEN*	**350936**
NA559	*PAYEN*	1174
NA582	*PAYEN*	TCS45473
NA611	*PAYEN*	**415001**
NA727	*PAYEN*	228010
NA736	*PAYEN*	**471272**
NA748	*PAYEN*	**415483**!
NA759	*PAYEN*	**472397**
NA764	*PAYEN*	**413246**
NA965	*PAYEN*	3341
NA988	*PAYEN*	712129
NAA4676A	*FORD*	**473215**!
NB-167	*PAYEN*	712133
NB-469	*PAYEN*	712138
NB-611	*PAYEN*	712134
NB020	*PAYEN*	712132
NB077	*PAYEN*	712127
NB083	*PAYEN*	712128
NB291	*PAYEN*	710180
NB300	*PAYEN*	224835
NB300	*PAYEN*	48X68X10!
NB304	*PAYEN*	224835
NB304	*PAYEN*	48X68X10!
NB310	*PAYEN*	712130
NB312	*CEW*	228010
NB384	*PAYEN*	224020
NB610	*PAYEN*	**472439**
NB625	*PAYEN*	712131
NB645	*PAYEN*	3771
NB645	*PAYEN*	TCS45472
NB698	*PAYEN*	228008
NB699	*PAYEN*	3771
NB735	*PAYEN*	224052
NCA1190A	*FORD*	7381S
NCA4251B	*FORD*	**415449**!
NCA4676A	*FORD*	**473228**!
NCB-4233A	*FORD*	450285
NCB42332	*FORD*	**473449**
ND14285	*GMC*	**417362**!
ND2237A	*FAIRB*	**471762**!
ND4204B	*WHITE*	HU024A
ND4426C	*WHITE*	HU110A
ND542A	*FAIRB*	**415551**
NDA7048A	*FORD*	**472492**!
NDA77086A	*FORD*	**473445**
NF013	*PAYEN*	221540
NF020	*PAYEN*	222240
NF029	*PAYEN*	223831
NF037	*PAYEN*	1012
NF037	*PAYEN*	1012N
NF129	*PAYEN*	222510
NF4A3044B9	*FAIRB*	**411253**!
NF634	*PAYEN*	BS40252
NJ-012	*PAYEN*	710383
NJ-034	*PAYEN*	710359
NJ-134	*PAYEN*	712008
NJ-171	*PAYEN*	710291
NJ-175	*PAYEN*	3543
NJ-192	*PAYEN*	710397
NJ-212	*PAYEN*	710353
NJ-216	*PAYEN*	710352
NJ-283	*PAYEN*	710341
NJ-298	*PAYEN*	710367
NJ-303	*PAYEN*	710366
NJ-383	*PAYEN*	710374
NJ-385	*PAYEN*	710339
NJ-388	*PAYEN*	710381
NJ-389	*PAYEN*	710379
NJ-390	*PAYEN*	226820
NJ-394	*PAYEN*	710373
NJ-420	*PAYEN*	710371
NJ-433	*PAYEN*	710384
NJ-472	*PAYEN*	710375
NJ-480	*PAYEN*	710372
NJ-515	*PAYEN*	710382
NJ-518	*PAYEN*	710344
NJ-646	*PAYEN*	710351
NJ-718	*PAYEN*	710407
NJ-772	*PAYEN*	710356
NJ-841	*PAYEN*	710406
NJ-855	*PAYEN*	710347
NJ-911	*PAYEN*	710107
NJ-947	*PAYEN*	225875*
NJ-947	*PAYEN*	710400
NJ-948	*PAYEN*	710401
NJ-957	*PAYEN*	710405
NJ-981	*PAYEN*	60X85X12
NJ001	*PAYEN*	227045
NJ002	*PAYEN*	1177
NJ003	*PAYEN*	1959
NJ004	*PAYEN*	712006
NJ004	*PAYEN*	BS27493
NJ005	*PAYEN*	224460
NJ006	*PAYEN*	227235
NJ007	*PAYEN*	224465
NJ008	*PAYEN*	227235
NJ009	*PAYEN*	1188
NJ011	*PAYEN*	224015
NJ014	*PAYEN*	225020
NJ015	*PAYEN*	224015
NJ017	*PAYEN*	1176
NJ021	*PAYEN*	2001
NJ021	*PAYEN*	BS27493
NJ021N	*PAYEN*	712006
NJ022	*PAYEN*	223831
NJ023	*PAYEN*	224210
NJ025	*PAYEN*	224570
NJ026	*PAYEN*	222510
NJ030	*PAYEN*	228010
NJ033	*PAYEN*	1174
NJ035	*PAYEN*	32X58X8!
NJ036	*PAYEN*	1181
NJ038	*PAYEN*	223555
NJ040	*PAYEN*	228020
NJ041	*PAYEN*	1992
NJ042	*PAYEN*	710313
NJ043	*PAYEN*	712011
NJ044	*PAYEN*	227550
NJ045	*PAYEN*	1994
NJ048	*PAYEN*	2000
NJ049	*PAYEN*	1977
NJ051	*PAYEN*	1183
NJ052	*PAYEN*	1214
NJ052	*PAYEN*	1214N
NJ055	*PAYEN*	231004
NJ055	*PAYEN*	BS16192
NJ056	*PAYEN*	228010
NJ057	*PAYEN*	224840
NJ058	*PAYEN*	228005
NJ060	*PAYEN*	228480
NJ062	*PAYEN*	226285
NJ064	*PAYEN*	1959
NJ066	*PAYEN*	224820
NJ067	*PAYEN*	225872
NJ068	*PAYEN*	1955
NJ069	*PAYEN*	1948
NJ070	*PAYEN*	1960
NJ071	*PAYEN*	1956
NJ072	*PAYEN*	710329
NJ073	*PAYEN*	227410
NJ073	*PAYEN*	BS40381
NJ074	*PAYEN*	1952
NJ077	*PAYEN*	1953
NJ078	*PAYEN*	1188
NJ080	*PAYEN*	710324
NJ081	*PAYEN*	224865
NJ082	*PAYEN*	224830
NJ084	*PAYEN*	222430
NJ085	*PAYEN*	2016
NJ088	*PAYEN*	1196
NJ089	*PAYEN*	**1213N**
NJ090	*PAYEN*	710320
NJ091	*PAYEN*	1994
NJ092	*PAYEN*	473823
NJ094	*PAYEN*	231206
NJ095	*PAYEN*	65X95X8
NJ096	*PAYEN*	223830
NJ098	*PAYEN*	717005
NJ099	*PAYEN*	227020
NJ100	*PAYEN*	**473179**!
NJ101	*PAYEN*	473812
NJ102	*PAYEN*	710318
NJ104	*PAYEN*	1950
NJ106	*PAYEN*	224045*
NJ107	*PAYEN*	444116
NJ110	*PAYEN*	712003
NJ116	*PAYEN*	2008
NJ117	*PAYEN*	1167
NJ118	*PAYEN*	222535
NJ119	*PAYEN*	222540
NJ120	*PAYEN*	1181
NJ122	*PAYEN*	224270
NJ125	*PAYEN*	710070
NJ127	*PAYEN*	1174
NJ128	*PAYEN*	224870
NJ129	*PAYEN*	494123
NJ130	*PAYEN*	225220
NJ132	*PAYEN*	710125

! Industrial Size/Type * Minor Width Difference

= The U.S. customer service number is 877-4-TIMKEN. The Canadian customer service numbers are 800-565-4927 (English) and 800-565-0438 (French-Canadian).

Mfr. No.	Name	Zero Duplication or Recommended Industrial
NJ133	PAYEN	710127
NJ136	PAYEN	710182
NJ139	PAYEN	225673
NJ140	PAYEN	226150
NJ141	PAYEN	226610
NJ142	PAYEN	710178
NJ143	PAYEN	221510
NJ144	PAYEN	222340
NJ145	PAYEN	223400
NJ146	PAYEN	226530
NJ147	PAYEN	223540
NJ148	PAYEN	2007N
NJ149	PAYEN	223050
NJ150	PAYEN	221820
NJ151	PAYEN	223050
NJ152	PAYEN	223550
NJ153	PAYEN	225278
NJ154	PAYEN	229004
NJ155	PAYEN	5685
NJ157	PAYEN	5685
NJ158	PAYEN	710060
NJ159	PAYEN	710282
NJ161	PAYEN	710314
NJ163	PAYEN	710260
NJ164	PAYEN	1147
NJ165	PAYEN	4901
NJ166	PAYEN	224066
NJ167	PAYEN	224063
NJ168	PAYEN	224068
NJ169	PAYEN	3459
NJ172	PAYEN	710238
NJ176	PAYEN	710438
NJ177	PAYEN	2012
NJ178	PAYEN	1932
NJ179	PAYEN	224235
NJ180	PAYEN	1205
NJ180	PAYEN	1205N
NJ181	PAYEN	**1213N**
NJ182	PAYEN	223543!
NJ183	PAYEN	710199
NJ184	PAYEN	226018
NJ186	PAYEN	710124
NJ187	PAYEN	710122
NJ188	PAYEN	710123
NJ190	PAYEN	224026
NJ191	PAYEN	710133
NJ193	PAYEN	710246
NJ195	PAYEN	222745
NJ196	PAYEN	222745
NJ198	PAYEN	710240
NJ199	PAYEN	1188
NJ200	PAYEN	224840
NJ201	PAYEN	224210
NJ202	PAYEN	713771
NJ232	PAYEN	710391
NJ239	PAYEN	225040
NJ240	PAYEN	4359V
NJ242	PAYEN	3771
NJ242	PAYEN	TCS45483
NJ243	PAYEN	710345
NJ251	PAYEN	228005
NJ252	PAYEN	712001
NJ254	PAYEN	222743
NJ255	PAYEN	221710
NJ261	PAYEN	1012
NJ261	PAYEN	1012N*
NJ261	PAYEN	710321
NJ263	PAYEN	1215
NJ263	PAYEN	1215N
NJ264	PAYEN	1216
NJ264	PAYEN	1216N
NJ265	PAYEN	228480
NJ266	PAYEN	712005
NJ267	PAYEN	224205
NJ268	PAYEN	710327
NJ269	PAYEN	710271
NJ270	PAYEN	712008
NJ274	PAYEN	223542
NJ275	PAYEN	1175
NJ276	PAYEN	1012
NJ276	PAYEN	1012N
NJ278	PAYEN	320564
NJ280	PAYEN	223340
NJ284	PAYEN	228410
NJ285	PAYEN	223420
NJ285	PAYEN	TCS45635
NJ286	PAYEN	223602
NJ287	PAYEN	228009
NJ288	PAYEN	224020
NJ291	PAYEN	225035
NJ297	PAYEN	225875
NJ300	PAYEN	228020
NJ302	PAYEN	231004
NJ309	PAYEN	227610
NJ309	PAYEN	BS40268
NJ311	PAYEN	710331
NJ312	PAYEN	228015
NJ313	PAYEN	320595
NJ321	PAYEN	222860
NJ321	PAYEN	TCS45633
NJ322	PAYEN	710060
NJ323	PAYEN	224025
NJ324	PAYEN	223420
NJ325	PAYEN	229005*
NJ325	PAYEN	229006
NJ334	PAYEN	222330
NJ337	PAYEN	710333
NJ339	PAYEN	222340
NJ341	PAYEN	1038
NJ342	PAYEN	1021V
NJ343	PAYEN	1019
NJ344	PAYEN	1953
NJ346	PAYEN	229010
NJ349	PAYEN	223235
NJ351	PAYEN	1012
NJ351	PAYEN	1012N
NJ353	PAYEN	1987
NJ354	PAYEN	716102
NJ358	PAYEN	1953
NJ360	PAYEN	228009
NJ368	PAYEN	223340
NJ369	PAYEN	225880
NJ373	PAYEN	710325
NJ377	PAYEN	710310
NJ378	PAYEN	710334
NJ381	PAYEN	710332
NJ382	PAYEN	1979
NJ384	PAYEN	1973
NJ386	PAYEN	2002
NJ387	PAYEN	1974
NJ391	PAYEN	138X152X12!
NJ391	PAYEN	710368
NJ393	PAYEN	710088
NJ395	PAYEN	226530
NJ396	PAYEN	223430
NJ396	PAYEN	710417
NJ399	PAYEN	1981
NJ405	PAYEN	224045*
NJ414	PAYEN	224045
NJ415	PAYEN	710051
NJ416	PAYEN	223230
NJ417	PAYEN	130X150X10!
NJ417	PAYEN	710380
NJ419	PAYEN	334111
NJ425	PAYEN	710278
NJ428	PAYEN	494123
NJ429	PAYEN	225010
NJ436	PAYEN	223220
NJ437	PAYEN	710076
NJ438	PAYEN	221820
NJ439	PAYEN	1989
NJ441	PAYEN	712011
NJ444	PAYEN	221922
NJ446	PAYEN	228700
NJ448	PAYEN	223012
NJ449	PAYEN	1217
NJ452	PAYEN	2007N
NJ453	PAYEN	1987
NJ454	PAYEN	1981
NJ456	PAYEN	1012
NJ456	PAYEN	1012N
NJ464	PAYEN	1943
NJ465	PAYEN	710087
NJ465	PAYEN	710376
NJ467	PAYEN	710084
NJ468	PAYEN	710085
NJ471	PAYEN	224020
NJ474	PAYEN	225230
NJ479	PAYEN	710277
NJ484	PAYEN	1990
NJ492	PAYEN	224510
NJ493	PAYEN	494122
NJ494	PAYEN	223550
NJ500	PAYEN	710440
NJ509	PAYEN	1170
NJ519	PAYEN	1981
NJ519	PAYEN	223014*
NJ520	PAYEN	710070
NJ521	PAYEN	710319
NJ522	PAYEN	2009
NJ525	PAYEN	68X90X10
NJ526	PAYEN	494117
NJ527	PAYEN	224250
NJ528	PAYEN	1939
NJ529	PAYEN	1938
NJ536	PAYEN	**1213N**
NJ537	PAYEN	4990
NJ539	PAYEN	225010
NJ541	PAYEN	2003N!
NJ551	PAYEN	1986
NJ557	PAYEN	224820
NJ558	PAYEN	228010
NJ559	PAYEN	223235
NJ562	PAYEN	224820
NJ563	PAYEN	223605
NJ564	PAYEN	1960
NJ568	PAYEN	710086
NJ569	PAYEN	474133
NJ571	PAYEN	710080
NJ572	PAYEN	474121
NJ574	PAYEN	1992
NJ575	PAYEN	1173
NJ577	PAYEN	224015
NJ578	PAYEN	225005
NJ579	PAYEN	1012
NJ579	PAYEN	1012N
NJ580	PAYEN	1984
NJ581	PAYEN	225420
NJ582	PAYEN	717004
NJ585	PAYEN	710268
NJ586	PAYEN	25X45X8
NJ587	PAYEN	1174
NJ588	PAYEN	55X78X10
NJ592	PAYEN	223605
NJ593	PAYEN	1176
NJ598	PAYEN	223012
NJ599	PAYEN	227020
NJ600	PAYEN	222820*
NJ600	PAYEN	710325
NJ602	PAYEN	225875
NJ603	PAYEN	225505
NJ606	PAYEN	223252
NJ607	PAYEN	223542
NJ608	PAYEN	223840
NJ609	PAYEN	223840
NJ610	PAYEN	222510
NJ611	PAYEN	223014
NJ612	PAYEN	223608
NJ612	PAYEN	36X52X7!
NJ615	PAYEN	223005
NJ617	PAYEN	320603
NJ618	PAYEN	145X175X15
NJ619	PAYEN	70X95X13
NJ620	PAYEN	222743
NJ621	PAYEN	221720
NJ622	PAYEN	221540
NJ625	PAYEN	**471950**
NJ626	PAYEN	1949
NJ628	PAYEN	225880
NJ629	PAYEN	224255
NJ630	PAYEN	225225
NJ631	PAYEN	1126
NJ632	PAYEN	222220
NJ634	PAYEN	3459
NJ635	PAYEN	710316
NJ637	PAYEN	224025
NJ638	PAYEN	225650
NJ639	PAYEN	710312
NJ642	PAYEN	32X43X7!
NJ642	PAYEN	710370
NJ645	PAYEN	710187
NJ648	PAYEN	30X55X10
NJ650	PAYEN	228250
NJ650	PAYEN	710448
NJ653	PAYEN	221735
NJ655	PAYEN	222025!
NJ657	PAYEN	22X40X7!
NJ658	PAYEN	225230
NJ659	PAYEN	225210
NJ660	PAYEN	1180
NJ661	PAYEN	710092
NJ662	PAYEN	1975
NJ663	PAYEN	3622
NJ664	PAYEN	2955
NJ665	PAYEN	710098
NJ666	PAYEN	224254
NJ675	PAYEN	228008
NJ676	PAYEN	**473258**!
NJ677	PAYEN	17X27X7
NJ678	PAYEN	413818
NJ679	PAYEN	1174*
NJ679	PAYEN	710309
NJ685	PAYEN	2016
NJ688	PAYEN	710124
NJ689	PAYEN	710134
NJ690	PAYEN	2003N!
NJ692	PAYEN	225650
NJ693	PAYEN	1985
NJ694	PAYEN	225650
NJ695	PAYEN	710072
NJ696	PAYEN	225540
NJ701	PAYEN	1948
NJ703	PAYEN	222655
NJ704	PAYEN	710110
NJ705	PAYEN	710109
NJ707	PAYEN	223830
NJ708	PAYEN	1180
NJ709	PAYEN	224210

! Industrial Size/Type * Minor Width Difference

Mfr. No.	Name	Zero Duplication or Recommended Industrial
NJ709	*PAYEN*	42X55X8!
NJ722	*PAYEN*	710294
NJ726	*PAYEN*	1970
NJ731	*PAYEN*	4901
NJ733	*PAYEN*	1140
NJ733	*PAYEN*	223580
NJ734	*PAYEN*	1937
NJ735	*PAYEN*	710167
NJ737	*PAYEN*	474230
NJ739	*PAYEN*	224570
NJ740	*PAYEN*	223553
NJ748	*PAYEN*	710338
NJ749	*PAYEN*	223543!
NJ749	*PAYEN*	710396
NJ750	*PAYEN*	710073
NJ751	*PAYEN*	222410
NJ756	*PAYEN*	710305
NJ757	*PAYEN*	710342
NJ758	*PAYEN*	222030
NJ759	*PAYEN*	222860
NJ760	*PAYEN*	710306
NJ761	*PAYEN*	223552
NJ762	*PAYEN*	221510
NJ763	*PAYEN*	223400
NJ764	*PAYEN*	**470460**
NJ765	*PAYEN*	224052
NJ766	*PAYEN*	1216
NJ766	*PAYEN*	1216N
NJ769	*PAYEN*	145X164X14!
NJ769	*PAYEN*	710369
NJ777	*PAYEN*	1147
NJ778	*PAYEN*	222220
NJ780	*PAYEN*	1936
NJ781	*PAYEN*	710337
NJ782	*PAYEN*	710148
NJ783	*PAYEN*	473677
NJ799	*PAYEN*	222835
NJ807	*PAYEN*	220860
NJ808	*PAYEN*	710323
NJ809	*PAYEN*	1973
NJ810	*PAYEN*	1207
NJ810	*PAYEN*	1207N
NJ811	*PAYEN*	224235
NJ812	*PAYEN*	1964
NJ813	*PAYEN*	710326
NJ814	*PAYEN*	1216
NJ814	*PAYEN*	1216N
NJ818	*PAYEN*	1994
NJ821	*PAYEN*	**471076**
NJ822	*PAYEN*	474161
NJ823	*PAYEN*	224255
NJ824	*PAYEN*	225082
NJ825	*PAYEN*	225230
NJ828	*PAYEN*	68X82X7!
NJ828	*PAYEN*	710378
NJ831	*PAYEN*	225880
NJ832	*PAYEN*	222030
NJ836	*PAYEN*	225035
NJ837	*PAYEN*	710072
NJ838	*PAYEN*	710069
NJ843	*PAYEN*	473823
NJ844	*PAYEN*	224400
NJ846	*PAYEN*	710233
NJ847	*PAYEN*	225230
NJ848	*PAYEN*	710230
NJ852	*PAYEN*	**1213N**
NJ854	*PAYEN*	224462
NJ858	*PAYEN*	710154
NJ859	*PAYEN*	223010
NJ861	*PAYEN*	223540
NJ862	*PAYEN*	224560
NJ863	*PAYEN*	224820
NJ864	*PAYEN*	224815
NJ865	*PAYEN*	224820
NJ866	*PAYEN*	224872
NJ867	*PAYEN*	4898
NJ868	*PAYEN*	1993
NJ872	*PAYEN*	223210
NJ873	*PAYEN*	710056
NJ874	*PAYEN*	223750
NJ875	*PAYEN*	223220
NJ877	*PAYEN*	221620
NJ878	*PAYEN*	710398
NJ881	*PAYEN*	710128
NJ882	*PAYEN*	710126
NJ885	*PAYEN*	710131
NJ887	*PAYEN*	223845
NJ889	*PAYEN*	1036
NJ890	*PAYEN*	225530
NJ891	*PAYEN*	223831
NJ892	*PAYEN*	225225
NJ904	*PAYEN*	1953
NJ905	*PAYEN*	13X22X6!
NJ905	*PAYEN*	710348
NJ906	*PAYEN*	225872
NJ907	*PAYEN*	1012
NJ907	*PAYEN*	1012N
NJ908	*PAYEN*	710094
NJ909	*PAYEN*	710093
NJ912	*PAYEN*	710175
NJ915	*PAYEN*	710315
NJ916	*PAYEN*	1938
NJ917	*PAYEN*	1938
NJ919	*PAYEN*	**1213N**
NJ925	*PAYEN*	710295
NJ928	*PAYEN*	710296
NJ933	*PAYEN*	713771
NJ934	*PAYEN*	222540
NJ936	*PAYEN*	710090
NJ939	*PAYEN*	710089
NJ940	*PAYEN*	224045*
NJ941	*PAYEN*	710167
NJ942	*PAYEN*	710081
NJ943	*PAYEN*	228480
NJ944	*PAYEN*	474133
NJ945	*PAYEN*	222220
NJ949	*PAYEN*	225875
NJ951	*PAYEN*	223250
NJ951	*PAYEN*	710415
NJ952	*PAYEN*	222820
NJ955	*PAYEN*	60X82X12!
NJ961	*PAYEN*	350572
NJ962	*PAYEN*	223215
NJ963	*PAYEN*	221820
NJ964	*PAYEN*	221820
NJ976	*PAYEN*	710433
NJ978	*PAYEN*	224660
NJ982	*PAYEN*	1120
NJ983	*PAYEN*	710097
NJ984	*PAYEN*	**473179**!
NJ985	*PAYEN*	1940
NJ986	*PAYEN*	710273
NJ987	*PAYEN*	710152
NJ988	*PAYEN*	225450
NJ989	*PAYEN*	222050
NJ991	*PAYEN*	224820
NJ992	*PAYEN*	710239
NJ993	*PAYEN*	320564
NJ994	*PAYEN*	1941
NJ995	*PAYEN*	225275
NJ996	*PAYEN*	225410
NJ997	*PAYEN*	1928
NJ998	*PAYEN*	1935
NJ999	*PAYEN*	1188
NJ999	*PAYEN*	710322
NK-010	*PAYEN*	710357
NK-016	*PAYEN*	710330
NK-046	*PAYEN*	222450
NK-082	*PAYEN*	710350
NK-083	*PAYEN*	710349
NK-086	*PAYEN*	712009
NK-098	*PAYEN*	225220
NK-105	*PAYEN*	710354
NK-140	*PAYEN*	3771
NK-145	*PAYEN*	1974
NK-146	*PAYEN*	710226
NK-147	*PAYEN*	225005
NK-147	*PAYEN*	710226*
NK-148	*PAYEN*	710231
NK-149	*PAYEN*	710229
NK-153	*PAYEN*	710236
NK-157	*PAYEN*	228250
NK-157	*PAYEN*	710448
NK-158	*PAYEN*	710355
NK-172	*PAYEN*	712009
NK-173	*PAYEN*	228410
NK-175	*PAYEN*	710392
NK-196	*PAYEN*	710393
NK-197	*PAYEN*	710394
NK005	*PAYEN*	710332
NK007	*PAYEN*	1012
NK007	*PAYEN*	1012N
NK008	*PAYEN*	4175
NK009	*PAYEN*	710168
NK011	*PAYEN*	1971
NK012	*PAYEN*	710193
NK014	*PAYEN*	224205
NK015	*PAYEN*	229210
NK022	*PAYEN*	710336
NK023	*PAYEN*	711181
NK027	*PAYEN*	710243
NK028	*PAYEN*	3667
NK031	*PAYEN*	226840
NK032	*PAYEN*	224253
NK034	*PAYEN*	1932
NK035	*PAYEN*	1019
NK036	*PAYEN*	221720
NK040	*PAYEN*	224979
NK042	*PAYEN*	222745
NK043	*PAYEN*	223801
NK047	*PAYEN*	1981
NK048	*PAYEN*	223253
NK049	*PAYEN*	223831
NK050	*PAYEN*	224020
NK053	*PAYEN*	225673
NK054	*PAYEN*	4899
NK055	*PAYEN*	710188
NK065	*PAYEN*	224045*
NK067	*PAYEN*	224026
NK068	*PAYEN*	350609
NK074	*PAYEN*	1170
NK075	*PAYEN*	223410
NK075	*PAYEN*	710416
NK076	*PAYEN*	3459
NK084	*PAYEN*	320583
NK094	*PAYEN*	710108
NK099	*PAYEN*	5686
NK100	*PAYEN*	350609
NK103	*PAYEN*	228700
NK104	*PAYEN*	229010
NK106	*PAYEN*	224650
NK109	*PAYEN*	221730
NK110	*PAYEN*	223535
NK144	*PAYEN*	710292
NK150	*PAYEN*	710436
NK152	*PAYEN*	224650
NK167	*PAYEN*	710439
NK195	*PAYEN*	710437
NK217	*PAYEN*	225040
NK230	*PAYEN*	474133
NK232	*PAYEN*	224250
NK233	*PAYEN*	712007
NLA307	*FAIRB*	**417343**!
NLA90	*FAIRB*	**471750**!
NO-1	*ATP*	2025
NO-10	*ATP*	3771
NO-2	*ATP*	710051
NO-3	*ATP*	224010
NP4426A	*WHITE*	HU110A
NSAH95X132X1222	*KOYO*	710085
NX32440A	*JOHND*	**415995**!
NX33341	*JOHND*	**415437**
NX33341	*JOHND*	**415437**!
NX33649	*JOHND*	**470334**!
NXA543	*BENDI*	**471504**!
O132034	*GMC*	470059
O132034	*GMC*	**470380**!
O2003	*WILYS*	**472179**
O2004	*WILYS*	**472179**
O2005	*WILYS*	**471801**!
O2088	*MASSE*	50081
O2501CS	*CASE*	450415
O3869AB	*CASE*	**476838**!
O52115	*ALLCH*	**417247**!
O52641	*ALLCH*	417267
O74147	*GMC*	5M497
OC5004	*LETN*	**416865**!
OCB521	*CLSTL*	**480630**!
OD248	*ALLCH*	**416654**!
OD2973U238	*WHITE*	340413
OD307	*ALLCH*	**476470**
OD5219	*LETN*	**415371**
OD613	*ALLCH*	**457874**
OE122	*ALLCH*	**415995**!
OF53	*BU-SP*	**473238**
OIT4676	*MARMO*	**473215**!
OM1177A	*FORD*	**473228**
OM1177A1	*FORD*	**473228**
OM1177B	*FORD*	**473228**
OM1177C	*FORD*	**473228**
OMX10191	*ALLCH*	**415482**
OMX10525	*ALLCH*	**471442**!
OMX10526	*ALLCH*	240735
OMX10660	*ALLCH*	**471684**!
OMX1663	*ALLCH*	55028
OMX3173	*ALLCH*	**412943**
OMX382	*ALLCH*	**412119**!
OMX9396	*ALLCH*	**471466**
OP53	*BU-SP*	**473238**!
OP54	*BU-SP*	**415937**!
OP55	*BU-SP*	**417351**!
OP56	*BU-SP*	**415001**!
OS26	*GR-DV*	470328
OS26	*GR-DV*	**481213**!
OS375	*GMC*	**330385**!
OT200A	*MINNM*	**415021**
OTC19003	*CONTI*	**473231**!
OTC19003	*ONAN*	**473231**!
P-0080	*C-P*	**415058**
P-0081	*C-P*	**455151**
P-0082	*C-P*	**416476**!
P-0305	*C-P*	**415551**
P-0306	*C-P*	**416158**
P-0307	*C-P*	**416666**
P-0308	*C-P*	**455280**
P-0326	*C-P*	**471271**!
P-0410	*C-P*	**415219**
P-328	*DURA*	**473405**

! Industrial Size/Type * Minor Width Difference

Mfr. No.	Name	Zero Duplication or Recommended Industrial
P-629C	DURA	**481443**!
P003001	EBERH	**471526**!
P003002	EBERH	**471466**!
P003005	EBERH	**473225**!
P003008	EBERH	**473232**
P003009	EBERH	**472185**!
P003010	EBERH	**473238**
P003012	EBERH	**472572**!
P003013	EBERH	**471442**!
P003014	EBERH	**471224**!
P003015	EBERH	**471192**
P003019	EBERH	**473226**
P003020	EBERH	**471763**
P003021	EBERH	**471766**!
P003022	EBERH	**473424**!
P003023	EBERH	450165
P003023	EBERH	**471801**!
P003024	EBERH	**471571**
P003026	EBERH	**473236**!
P003032	EBERH	**450342**
P003035	EBERH	**472012**
P003041	EBERH	**471652**
P003042	EBERH	**472354**!
P003055	EBERH	**481792**
P003056	EBERH	**471730**
P003119	EBERH	**481397**
P1011	JOHND	**471570**!
P1012	JOHND	**476838**!
P1019	DEXTR	473336
P116	REULD	**470774**!
P127	REULD	**416664**!
P12710	ATHEY	**471689**!
P1362	JOHND	**471529**
P14730	FORD	**471820**
P14730	PETTI	**474264**
P14731	FORD	**471820**
P14732	FORD	**473367**!
P14732	FORD	**473367**
P14732	PETTI	**471820**
P16076	C-R	5115
P1651	C-P	**415645**!
P1651	C-P	455104
P1652	C-P	**417487**
P1653	C-P	**415991**
P1653	C-P	455146!
P16685	ATHEY	**471619**!
P1780	C-P	55078S
P179	KOEH	**350364**
P190	BUC-E	**417269**!
P19234	ATHEY	**473467**!
P1936	C-P	**417247**!
P1941	C-P	**470530**!
P19653F	NAPCO	415970=
P2003	TEREL	41075S
P20254	JOHND	**472234**
P20255	JOHND	**415991**
P20255	JOHND	455146!
P20274	JOHND	**412861**
P2044	TEREL	**476470**
P2045	TEREL	**473224**!
P213587	KRSE	**470605**!
P2171	ITM	1086*=
P2180	TEREL	**473446**
P2183	TEREL	**472397**!
P2202	ITM	1994
P2202	ITM	48X70X9!
P22351	JOHND	**411245**!
P2269	TEREL	**413246**
P2343	TEREL	**473238**!
P2360	TEREL	**471272**!
P2374	TEREL	**472179**
P2387	TEREL	**471692**!
P2388	TEREL	**473215**!
P2410	ITM	**472164**!
P2411	TEREL	**473237**!
P24112	BUC-E	470086
P2412	BUC-E	**416107**!
P2412	BUC-E	455073
P24149	JOHND	**473229**
P2419	TEREL	**415449**!
P2420	TEREL	**472397**!
P2424	TEREL	**471766**!
P243	BUC-E	**415116**
P24341	JOHND	**473228**
P2441	TEREL	**473237**!
P2494	ITM	2551
P25147	BUC-E	**472157**!
P25147	BUC-E	**472157**
P2559	TEREL	**470380**!
P2562	TEREL	**471138**!
P2598	TEREL	**470565**!
P2604	TEREL	**471766**!
P2612	TEREL	**471981**
P2621	TEREL	**472164**!
P2625	ITM	**470898**
P2625	TEREL	**473215**!
P26500	JOHND	**471554**!
P2672	TEREL	**470605**!
P2674	ITM	224045
P2674	ITM	40X62X12!
P2704	TEREL	**473239**!
P2707	TEREL	J1117
P2749	TEREL	**410102**
P2755	TEREL	**451078**!
P2803	TEREL	**471835**!
P2804	TEREL	**473010**!
P2805	TEREL	**473232**!
P28112	BUC-E	470086
P2812	BUC-E	**415072**
P283	BUC-E	**417604**
P2871	ITM	224015
P2879	TEREL	**471984**
P2900	TEREL	**471649**!
P29928	HARN	415970=
P29928	NAPCO	415970=
P2BA7603	GN-TI	6283S
P2X6976	CATER	**473231**=
P3045	TEREL	J1109
P3059	TEREL	**471760**
P3091	ITM	**472299**
P3130	ITM	**473234**!
P3131	ITM	1089*=
P3140	ITM	**472179**
P3141	ITM	1873
P3156	ITM	**473241**
P3167	ITM	**473016**!
P3168	ITM	**472492**!
P3242	ITM	7399S!
P3306	TEREL	**410102**=
P3315	ITM	**470334**!
P3337	TEREL	**473442**!
P3339	TEREL	**470682**
P3348	ITM	**471870**!
P3385	TEREL	**413247**!
P34195	JOHND	**415995**!
P3446	ITM	224040
P3446	ITM	40X60X10!
P3462	TEREL	**476470**
P3485	ITM	226020
P3485	ITM	60X80X8!
P3486	ITM	1163=
P3487	ITM	224045
P3487	ITM	40X62X12!
P3494	ITM	340823
P3498	ITM	**471224**!
P3507	ITM	1077=
P3509	ITM	**473228**
P3510	ITM	1020
P3511	ITM	**471192**
P3573	TEREL	**472924**!
P3587	TEREL	**471692**!
P3591	BU-SP	**472164**!
P3592	BU-SP	**415138**!
P3597	BU-SP	**472924**!
P3618	TEREL	**471689**!
P3619	TEREL	**471224**!
P3655	ITM	224045
P3655	ITM	40X62X12!
P3830	ITM	1094=
P3835	ITM	**471737**
P3842	ITM	222510
P3842	ITM	25X35X7!
P39080002	LAVOI	240435
P39080005	LAVOI	240716
P391	PORTR	**415302**
P3911	ITM	**470898**
P392	PORTR	**415995**!
P3933	ITM	2655
P3952	ITM	**470487**!
P3971	ITM	**472258**!
P3973	ITM	224520
P3973	ITM	45X60X10!
P3974	ITM	1973
P3974	ITM	48X65X10!
P3987	TEREL	**471833**
P3990	TEREL	J1103
P3991	TEREL	J1105
P39A217	CONTI	**473460**
P40057	JOHND	**472439**
P4152	ITM	1110
P41721	JOHND	**471270**!
P41721H	JOHND	**471270**!
P4187	TEREL	**415259**!
P4520	ITM	1097N
P4531	ITM	1977
P4535	ITM	3771
P4544	ITM	1174
P4544	ITM	38X52X8.5!
P4583	ITM	33X50X12!
P4609	ITM	**471652**
P4646	ITM	1012
P4646	ITM	1012N
P4747	ITM	224045
P4747	ITM	40X62X12!
P4778	ITM	2669
P4784	ITM	223840
P4784	ITM	38X58X8!
P4785	ITM	1177
P4788	ITM	1176
P4789	ITM	1180
P4789	ITM	41X55X7!
P4795	ITM	1959
P4797	ITM	55X82X12!
P4802	ITM	223542
P4802	ITM	35X55X11!
P49483	WABCO	240009
P494832	WABCO	240414
P4949	ITM	42X55X8!
P4954	ITM	**1213N**
P497	PORTR	**415047**
P51322	PACIF	**417357**
P51418	PACIF	**415379**
P51898	PACIF	**470898**
P5339	MASSE	**473214**
P5364Z	WITTE	**472439**
P6085	ITM	1180
P6085	ITM	41X55X7!
P6085	PETTI	450104
P6089	PETTI	55030
P6090	PETTI	**415047**
P6096	PETTI	**455151**
P6112	ITM	1174
P6112	ITM	38X52X8.5!
P611810	KRSE	**473238**!
P611811	KRSE	J1105
P6131	BU-SP	**476470**
P6132	BU-SP	**417298**
P6133	BU-SP	**416865**!
P6173	ITM	1077=
P6174	ITM	**472213**
P6177	ITM	224235
P6177	ITM	42X58X7!
P6178	ITM	224025
P6179	ITM	35X50X8!
P6179	ITM	3771
P6188	ITM	2642
P6201	ITM	224520
P6201	ITM	45X60X10!
P6205	ITM	1994
P6205	ITM	48X70X9!
P6213	ITM	223542
P6213	ITM	35X55X11!
P6247	ITM	1174
P6247	ITM	38X52X8.5!
P6262	BU-SP	**417357**
P6262	BU-SP	455192!
P6296	BU-SP	**415991**
P6296	BU-SP	455146!
P6298	BU-SP	**417556**
P6298	ITM	224270
P6298	ITM	42X72X10!
P6299	BU-SP	**416239**!
P629B	DURA	450129
P629B	DURA	**472826**!
P6301	ITM	1209
P6302	ITM	1195
P6304	ITM	1012
P6304	ITM	1012N
P6304	ITM	45X62X8!
P6305	ITM	1208
P6305	ITM	48X72X7!
P6319	ITM	482126
P6332	ITM	1192
P6366	ITM	224015
P6367	ITM	224045
P6367	ITM	40X62X12!
P6369	ITM	5778
P6373	ITM	1174
P6373	ITM	38X52X8.5!
P6374	ITM	1181
P6374	ITM	41X56X7!
P6375	ITM	1183
P6376	ITM	224045
P6376	ITM	40X62X12!
P6377	ITM	1981
P6378	ITM	1992
P6387	ITM	222510
P6387	ITM	25X35X7!
P6428	ITM	224820
P6428	ITM	48X62X8!
P6430	ITM	1196
P6471	ITM	1170
P6472	ITM	32X58X8!
P6478	ITM	1167
P6492	ITM	1955
P6492	ITM	52X65X9!
P6500	ITM	473823
P6502	ITM	**1213N**

! Industrial Size/Type * Minor Width Difference

= The U.S. customer service number is 877-4-TIMKEN. The Canadian customer service numbers are 800-565-4927 (English) and 800-565-0438 (French-Canadian).

Mfr. No.	Name	Zero Duplication or Recommended Industrial
P6505	*ITM*	228020
P6505	*ITM*	80X105X13!
P6525	*ITM*	2551
P6534	*ITM*	1173
P6536	*ITM*	1188
P6585	*ITM*	1953
P6585	*ITM*	42X60X7!
P6586	*ITM*	3771
P6606	*BU-SP*	**416892**!
P6671	*ITM*	1950
P66851	*VIC*	2000
P66851	*VIC*	224235
P66851	*VIC*	42X58X7!
P6800	*BU-SP*	**415072**
P6881	*BU-SP*	**415551**
P70305	*ALLCH*	**472397**!
P7923	*ITM*	224020
P7923	*ITM*	40X55X8!
P7950	*ITM*	1165
P7951	*ITM*	1217
P7953	*ITM*	1969
P7953	*ITM*	48X63X9!
P7954	*ITM*	1962
P7955	*ITM*	1949
P7959	*ITM*	1128
P7962	*ITM*	1952
P7963	*ITM*	1953
P7963	*ITM*	42X60X7!
P7967	*ITM*	1960
P7968	*ITM*	1956
P7972	*ITM*	1974
P7976	*ITM*	**473238**!
P7979	*ITM*	1012
P7979	*ITM*	1012N
P7985	*ITM*	1012
P7985	*ITM*	1012N
P7985	*ITM*	45X62X8!
P7987	*ITM*	1996
P7989	*ITM*	482126
P7M9697	*CATER*	**473447**
P80179KE	*PARK*	**471271**!
P96184	*KRSE*	**415458**!
P970	*PORTR*	**476470**
P971	*PORTR*	**415995**!
P975	*PORTR*	**415138**!
P977	*PORTR*	**415196**!
PA1099	*IDECO*	**417603**!
PA1099	*INTDE*	**417603**!
PA117	*ALLCH*	**471341**!
PA1188	*INTDE*	**416666**
PA1189	*IDECO*	**455480**!
PA1189	*INTDE*	**455480**!
PA1229	*IDECO*	**415138**!
PA1229	*INTDE*	**415138**!
PA1675	*INTDE*	**415116**
PA2108	*MINNM*	**470625**!
PA2467	*INTDE*	**415066**
PA303	*ATHEY*	450054
PA3709	*AM CH*	**450040**
PA3710	*AM CH*	**473214**!
PA42218	*ROCKW*	**412871**!
PA489	*IDECO*	**415035**
PA489	*IDECO*	**415035**!
PA767	*IDECO*	**415725**!
PA861	*MINNM*	**473228**
PA988	*IDECO*	**415128**
PA988	*INTDE*	**415128**
PB0167	*WABCO*	**471760**
PB1039	*WABCO*	**415124**
PB3096	*WABCO*	710028
PB425	*HART*	**480210**!
PB426	*HART*	**451583**!
PB4399	*WABCO*	**417608**
PB4665	*CATER*	455310
PB4665	*WABCO*	455310
PBB77497B	*FORD*	424
PBN7048A	*FORD*	**415988**
PC1571	*CLARK*	**416167**!
PC173	*CLARK*	**416706**
PC1731	*CLARK*	**416167**!
PC173A	*CLARK*	**417344**!
PC2191	*CLARK*	55539=
PD1039	*WABCO*	**415124**
PD16624	*MASSE*	**471760**
PECP1432	*FORD*	203013
PECP1477	*FORD*	291099
PEO9521	*FORD*	**472164**!
PG175	*ITM*	223620
PGF10435	*AU-WS*	**473467**!
PGF2788	*AU-WS*	**417205**!
PGF2794	*AU-WS*	**416891**!
PGF2872	*AU-WS*	**472924**!
PGF2992	*AU-WS*	**470530**!
PGF3062	*AU-WS*	**473463**
PGF3216	*AU-WS*	**472636**!
PGF3216A	*AU-WS*	**472636**!
PGF4373	*AU-WS*	**417488**!
PGF4511	*AU-WS*	**415449**!
PGF4619	*AU-WS*	**470605**!
PGF4921	*AU-WS*	**415960**
PGF4922	*AU-WS*	**472409**
PGF5240	*AU-WS*	5971
PGF5240A	*AU-WS*	5971
PGF5240B	*AU-WS*	5971
PGF6023	*AU-WS*	**472179**
PGF6024	*AU-WS*	**415449**!
PGF6024A	*AU-WS*	**415449**!
PGF6050	*AU-WS*	**415036**
PGF8089	*AU-WS*	**412040**
PGF8447	*AU-WS*	**416921**!
PGF8486	*AU-WS*	**471554**!
PGF8611	*AU-WS*	**450133**
PGF8612	*AU-WS*	**470605**!
PGF8764	*AU-WS*	**472924**!
PGF8809	*AU-WS*	**412040**
PGF8809A	*B-L-H*	**412040**
PGF8839	*AU-WS*	**473440**!
PGF8839A	*AU-WS*	**473440**!
PGF8840	*AU-WS*	**471141**!
PGF8840A	*AU-WS*	**471141**!
PGF8857	*AU-WS*	**473224**!
PGF8857A	*AU-WS*	**473224**!
PGF8857A	*CLARK*	**473224**!
PGF8861	*AU-WS*	**450472**!
PGF8861A	*AU-WS*	**450472**!
PGF8940	*AU-WS*	**330385**
PGF8941	*AU-WS*	340771
PGF8946	*AU-WS*	**472311**!
PGF8998	*AU-WS*	**472354**!
PGF9124	*AU-WS*	**472636**!
PGF9192	*AU-WS*	**417487**
PGF9736	*AU-WS*	**473228**
PGF9736A	*AU-WS*	**473228**
PH0155	*RACIN*	**450188**
PH15	*CALSO*	204038
PH200B	*WISCO*	40337S
PH234A	*STN-S*	**471554**!
PH234A	*WISCO*	**471554**!
PH264	*WISCO*	**471224**!
PH264A	*WISCO*	**471224**!
PH265	*WISCO*	**470712**!
PH265A	*WISCO*	**470712**!
PH269	*CASE*	**472179**
PH269	*WISCO*	**472179**
PH270A	*STN-S*	**471264**
PH270A	*WISCO*	**471264**
PH272A	*WISCO*	**471689**!
PH278	*CASE*	**417316**!
PH278	*WISCO*	**417316**!
PH280	*STN-S*	**473426**
PH280	*WISCO*	**473426**
PH283	*STN-S*	240119
PH283	*WISCO*	240119
PH284	*WISCO*	**472572**!
PH285	*WISCO*	**471529**
PH292	*WISCO*	**471571**
PH299	*CASE*	**473227**
PH299	*COC*	**473227**
PH299	*WISCO*	**473227**
PH327	*WISCO*	**471870**!
PH344	*WISCO*	**471821**!
PH364	*WISCO*	**471862**
PH374	*WISCO*	450129
PH374	*WISCO*	**472826**!
PH378	*WISCO*	**473213**!
PH382	*WISCO*	**472397**!
PH382A	*WISCO*	**472397**!
PH391	*WISCO*	**470530**!
PH451	*WISCO*	6936S
PH529	*WISCO*	**471737**
PH557-A	*WISCO*	8597S
PK524	*AM BO*	**471532**
PK524U	*AM BO*	**471532**
PL379	*CONTI*	**471224**!
PM200322	*JOHND*	200322
PM200886	*JOHND*	200886
PM203029	*JOHND*	203029
PM204005	*JOHND*	204005
PM204013	*JOHND*	204013
PM204035	*JOHND*	204035
PM204500	*JOHND*	204500!
PM204506	*JOHND*	204506!
PM204507	*JOHND*	204507!
PM240319	*JOHND*	240319
PM2893	*F-R-H*	**471341**!
PM3341	*TW-DI*	**470530**=
PM415259	*JOHND*	**415259**!
PMB7657A	*FORD*	7300S
PMB7657A1	*FORD*	7300S
PMB7657A3	*FORD*	7300S
PMB7657B3	*FORD*	7300S
PMRD2000	*JOHND*	RD2000
PO1	*ATP*	**471827**
PO2	*ATP*	**470898**!
PO5653M	*VIC*	**415379**
PO9635M	*VIC*	**417621**!
PO9781M	*DANA*	**415995**!
PP1296	*ALTFO*	40389S
PP347	*ALTFO*	**415449**!
PP393	*ALTFO*	**415995**!
PP624	*ALTFO*	**476470**
PP650	*ALTFO*	**415072**
PR1004	*ITM*	5751
PR1007	*ITM*	**350364**
PR1008	*ITM*	240385
PR1011	*ITM*	**330385**!
PR1018	*ITM*	**330385**!
PR1023	*ITM*	**455134**!
PR1026	*ITM*	**415041**
PR1029	*HU-WR*	**412943**
PR1030	*ITM*	370036A
PR1031	*ITM*	**473229**!
PR1037	*ITM*	**455336**
PR1039	*ITM*	350156
PR1039	*ITM*	**473096**
PR1044	*ITM*	**330699**
PR1045	*ITM*	353132
PR1049	*ITM*	7107A=
PR1052	*ITM*	**471442**!
PR1057	*ITM*	351487
PR1065	*ITM*	**474277**
PR1067	*ITM*	**471526**!
PR1070	*ITM*	**471526**!
PR1072	*ITM*	**471526**!
PR1075	*ITM*	**471281**!
PR1076	*ITM*	**415458**!
PR1078	*ITM*	**471466**!
PR1079	*ITM*	**415234**!
PR1082	*ITM*	**416921**!
PR1083	*ITM*	**455151**
PR1086	*ITM*	**471466**!
PR1092	*ITM*	**415234**!
PR1093	*ITM*	40576S
PR1094	*ITM*	**471766**!
PR1095	*ITM*	**471766**!
PR1096	*ITM*	**471766**!
PR1100	*ITM*	**473450**!
PR1104	*ITM*	**471766**!
PR1112	*ITM*	**416738**!
PR1118	*ITM*	**470954**!
PR1123	*ITM*	**481537**
PR1127	*ITM*	**472394**
PR1128	*ITM*	**472394**
PR1130	*ITM*	**470954**!
PR1132	*ITM*	**470954**!
PR1134	*ITM*	**470954**!
PR1137	*ITM*	5801=
PR1138	*ITM*	**472439**
PR1139	*ITM*	**470954**
PR1140	*ITM*	**470954**!
PR1142	*ITM*	**470954**!
PR1143	*ITM*	**470954**!
PR1144	*ITM*	**473179**!
PR1145	*ITM*	45637S
PR1146	*ITM*	**470954**!
PR1148	*ITM*	**470954**!
PR1150	*ITM*	**470601**
PR1152	*ITM*	5976S
PR1153	*ITM*	340850
PR1154	*ITM*	**254287**!
PR1155	*ITM*	**254287**!
PR1156	*ITM*	**254287**!
PR1157	*ITM*	**473467**
PR1158	*ITM*	**473440**!
PR1163	*ITM*	**413469**!
PR1165	*ITM*	**480821**!
PR1166	*ITM*	342517
PR1171	*ITM*	**411253**!
PR1173	*ITM*	473416
PR1174	*ITM*	**473462**
PR1175	*ITM*	5778
PR1182	*ITM*	**471316**
PR1183	*ITM*	5756
PR1185	*ITM*	**410190**
PR1189	*ITM*	**470898**
PR1192	*ITM*	**472452**
PR1194	*ITM*	**471267**
PR1195	*ITM*	**471267**!
PR1196	*ITM*	7600S
PR1199	*ITM*	5836
PR1201	*ITM*	**470354**
PR1202	*ITM*	**471267**!
PR1204	*ITM*	**471267**!
PR1206	*ITM*	340787
PR1208	*ITM*	40369S
PR1210	*ITM*	40286
PR1214	*ITM*	**472311**!
PR1219	*ITM*	5790=

! Industrial Size/Type

= The U.S. customer service number is 877-4-TIMKEN. The Canadian customer service numbers are 800-565-4927 (English) and 800-565-0438 (French-Canadian).

Mfr. No.	Name	Zero Duplication or Recommended Industrial
PR1220	ITM	471224!
PR1221	ITM	472179
PR1223	ITM	471564
PR1226	ITM	474253
PR1227	ITM	471570!
PR1234	ITM	471570!
PR1235	ITM	410737!
PR1237	ITM	473473
PR1238	ITM	415449!
PR1239	ITM	472409!
PR1240	ITM	471224!
PR1242	ITM	411330
PR1245	ITM	471224!
PR1253	ITM	5924
PR1255	ITM	410737!
PR1257	ITM	471224!
PR1258	ITM	410308!
PR1258	ITM	473468
PR1259	ITM	410987!
PR1261	ITM	340815
PR1263	ITM	417481
PR1268	ITM	472287!
PR1269	ITM	471270!
PR1271	ITM	240151
PR1273	ITM	472560N!
PR1275	ITM	473234!
PR1278	ITM	473215!
PR1281	ITM	481864
PR1284	ITM	450065
PR1293	ITM	471647
PR1297	ITM	472560N!
PR1298	ITM	471413!
PR1300	ITM	471651
PR1302	ITM	43071S
PR1303	ITM	471651
PR1305	ITM	471827!
PR1306	ITM	471652
PR1308	ITM	471820
PR1311	ITM	471643!
PR1312	ITM	471643!
PR1314	ITM	471643!
PR1316	ITM	481644
PR1318	ITM	471646!
PR1319	ITM	471646!
PR1320	ITM	474264
PR1321	ITM	6324S=
PR1326	ITM	472705!
PR1330	ITM	471649!
PR1331	ITM	471649!
PR1332	ITM	473215!
PR1333	ITM	473211!
PR1334	ITM	470625!
PR1337	ITM	471787!
PR1339	ITM	471652
PR1340	ITM	6626S
PR1343	ITM	415995!
PR1343	ITM	415995!
PR1344	ITM	50491=
PR1346	ITM	417316!
PR1349	ITM	8059S
PR1353	ITM	415001!
PR1356	ITM	474260
PR1358	ITM	470328
PR1358	ITM	481213!
PR1361	ITM	474278
PR1361	ITM	50356=
PR1363	ITM	473367
PR1365	ITM	471684!
PR1366	ITM	471337
PR1367	ITM	472951
PR1367	ITM	474252
PR1368	ITM	470898
PR1369	ITM	472951
PR1369	ITM	474252
PR1372	ITM	6064
PR1374	ITM	415960
PR1375	ITM	471688
PR1376	ITM	471689!
PR1378	ITM	471831!
PR1379	ITM	472636!
PR1380	ITM	417172
PR1381	ITM	471689!
PR1383	ITM	473459
PR1384	ITM	471689!
PR1385	ITM	450467
PR1387	ITM	471689!
PR1390	ITM	471689!
PR1391	ITM	472016!
PR1392	ITM	471413
PR1395	ITM	473203
PR1396	ITM	471619!
PR1397	ITM	471413
PR1400	ITM	417267
PR1402	ITM	472636!
PR1404	ITM	450593!
PR1405	ITM	417621!
PR1406	ITM	415437
PR1408	ITM	471141!
PR1410	ITM	416282
PR1413	ITM	416125!
PR1419	ITM	476838!
PR1420	ITM	476838!
PR1421	ITM	412119!
PR1422	ITM	415060
PR1422	ITM	455060
PR1423	ITM	473425
PR1426	ITM	42763
PR1428	ITM	323138!
PR1433	ITM	418028
PR1433	ITM	455137!
PR1435	ITM	471103!
PR1451	ITM	474264
PR1453	ITM	471735
PR1457	ITM	470950!
PR1457	ITM	6241S
PR1458	ITM	470712!
PR1459	ITM	470712!
PR1460	ITM	470712!
PR1461	ITM	471466!
PR1469	ITM	471737
PR1473	ITM	55687=
PR1474	ITM	472354!
PR1475	ITM	472354!
PR1476	ITM	412119!
PR1482	ITM	450776!
PR1493	ITM	410190
PR1495	ITM	455024
PR1501	ITM	471760
PR1503	ITM	416865!
PR1504	ITM	471762!
PR1506	ITM	471763
PR1508	ITM	414268!
PR1511	ITM	471765!
PR1512	ITM	471765!
PR1513	ITM	471765!
PR1514	ITM	40769S
PR1515	ITM	417485
PR1518	ITM	410694!
PR1519	ITM	240356
PR1522	ITM	6635S
PR1524	ITM	415025
PR1525	ITM	471272!
PR1527	ITM	5403
PR1528	ITM	5401
PR1529	ITM	471835!
PR1530	ITM	6362=
PR1532	ITM	417172
PR1533	ITM	474253
PR1538	ITM	472258!
PR1540	ITM	471192
PR1545	ITM	474276!
PR1546	ITM	473313!
PR1547	ITM	481163!
PR1548	ITM	481163!
PR1549	ITM	416476!
PR1551	ITM	471413!
PR1554	ITM	6358
PR1559	ITM	471192
PR1561	ITM	416444
PR1562	ITM	417491
PR1570	ITM	1077=
PR1571	ITM	471619!
PR1572	ITM	7600S
PR1576	ITM	471785!
PR1577	ITM	471785!
PR1580	ITM	350942
PR1582	ITM	471787!
PR1583	ITM	412871!
PR1584	ITM	473463
PR1585	ITM	415085!
PR1585	ITM	456648
PR1589	ITM	471787!
PR1590	ITM	417316!
PR1592	ITM	450122=
PR1593	ITM	484054
PR1594	ITM	415697!
PR1594	ITM	455547
PR1595	ITM	484054
PR1596	ITM	6760S
PR1599	ITM	470774!
PR1603	ITM	3395!
PR1603	ITM	352444
PR1606	ITM	7537S
PR1611	ITM	474279N
PR1612	ITM	471795
PR1613	ITM	416297
PR1614	ITM	471795
PR1615	ITM	471795
PR1617	ITM	450666
PR1618	ITM	473211!
PR1620	ITM	410308
PR1624	ITM	6781
PR1625	ITM	471192
PR1626	ITM	471192
PR1630	ITM	473224!
PR1643	ITM	472070
PR1644	ITM	44052
PR1651	ITM	474255
PR1652	ITM	471801!
PR1653	ITM	471801!
PR1661	ITM	50468
PR1666	ITM	343098
PR1667	ITM	470625!
PR1669	ITM	470625!
PR1679	ITM	450400
PR1681	ITM	471808!
PR1690	ITM	7044NA
PR1696	ITM	482126
PR1701	ITM	42081S!
PR1703	ITM	473215!
PR1704	ITM	473215!
PR1707	ITM	473231!
PR1710	ITM	473231!
PR1713	ITM	473237!
PR1714	ITM	473237!
PR1717	ITM	473237!
PR1718	ITM	473231!
PR1721	ITM	473237!
PR1725	ITM	471818
PR1729	ITM	471821!
PR1731	ITM	473445
PR1732	ITM	471504
PR1736	ITM	451817
PR1751	ITM	471570!
PR1758	ITM	473214!
PR1760	ITM	473226
PR1764	ITM	473228!
PR1772	ITM	473229!
PR1773	ITM	473229!
PR1779	ITM	473229!
PR1781	ITM	472164!
PR1782	ITM	472164!
PR1783	ITM	472164!
PR1788	ITM	472164!
PR1790	ITM	473454
PR1792	ITM	471195!
PR1810	ITM	470682
PR1817	ITM	472185!
PR1823	ITM	472439
PR1824	ITM	471424!
PR1834	ITM	471868
PR1836	ITM	471870!
PR1840	ITM	450765!
PR1841	ITM	323119
PR1843	ITM	323119
PR1846	ITM	474272
PR1847	ITM	473440!
PR1856	ITM	472179
PR1857	ITM	472572!
PR1860	ITM	473241
PR1861	ITM	472492!
PR1862	ITM	472492!
PR1863	ITM	472492!
PR1865	ITM	331107N
PR1868	ITM	473204
PR1879	ITM	473444!
PR1883	ITM	473238!
PR1884	ITM	473238!
PR1885	ITM	472144!
PR1886	ITM	472924!
PR1887	ITM	472924!
PR1888	ITM	451948
PR1899	ITM	410989
PR1899	ITM	470989
PR1902	ITM	471984
PR1903	ITM	471984
PR1906	ITM	7044NA
PR1907	ITM	473239!
PR1908	ITM	473239!
PR1911	ITM	472394
PR1912	ITM	472394
PR1914	ITM	472394
PR1915	ITM	410308!
PR1915	ITM	473468
PR1916	ITM	472397!
PR1917	ITM	472397!
PR1918	ITM	472492!
PR1921	ITM	330385!
PR1924	ITM	473467
PR1927	ITM	471272!
PR1928	ITM	471272!
PR1929	ITM	470605!
PR1930	ITM	472397!
PR1931	ITM	471272!
PR1932	ITM	471272!
PR1933	ITM	471272!
PR1934	ITM	473241
PR1937	ITM	470764!

! Industrial Size/Type
= The U.S. customer service number is 877-4-TIMKEN. The Canadian customer service numbers are 800-565-4927 (English) and 800-565-0438 (French-Canadian).

Mfr. No.	Name	Zero Duplication or Recommended Industrial
PR1937	ITM	50764
PR1938	ITM	**471341**!
PR1939	ITM	**470764**!
PR1939	ITM	50764
PR1941	ITM	40555
PR1941	ITM	40555S!
PR1945	ITM	**410308**!
PR1945	ITM	473468
PR1951	ITM	**470565**!
PR1952	ITM	**471138**!
PR1953	ITM	**472150**
PR1958	ITM	43290S
PR1965	ITM	482267
PR1968	ITM	226020
PR1968	ITM	60X80X8!
PR1978	ITM	**473464**
PR1981	ITM	**330385**!
PR1985	ITM	**471887**
PR1986	ITM	**472029**
PR1988	ITM	**473243**
PR1989	ITM	**473245**!
PR1990	ITM	**472636**!
PR1993	ITM	**472636**!
PR1998	ITM	**471271**!
PR1999	ITM	**471271**!
PR2002	ITM	**415150**!
PR2003	ITM	**417343**!
PR2005	ITM	**416666**
PR2006	ITM	**415645**!
PR2007	ITM	**417196**!
PR2008	ITM	**456105**
PR2009	ITM	**473423**
PR2010	ITM	**471553**!
PR2013	ITM	51032S
PR2021	ITM	5487
PR2029	ITM	**473426**
PR2030	ITM	**254270**
PR2032	ITM	**412943**
PR2033	ITM	8059S
PR2035	ITM	**471750**!
PR2036	ITM	**412119**!
PR2037	ITM	**417484**!
PR2038	ITM	5481
PR2042	ITM	**410694**!
PR2043	ITM	**472018**
PR2044	ITM	340835
PR2045	ITM	**471801**!
PR2050	ITM	**417507**
PR2050	ITM	**417507**!
PR2052	ITM	**410496**!
PR2053	ITM	**410496**!
PR2054	ITM	**410496**!
PR2055	ITM	**471529**
PR2058	ITM	**410102**
PR2059	ITM	**470380**!
PR2060	ITM	1167
PR2061	ITM	1167
PR2063	ITM	**472164**!
PR2064	ITM	**416154**!
PR2065	ITM	**471765**!
PR2066	ITM	**471868**
PR2067	ITM	**413247**!
PR2069	ITM	**473231**!
PR2070	ITM	**450133**
PR2073	ITM	**413247**!
PR2075	ITM	**471281**!
PR2076	ITM	**413247**!
PR2077	ITM	**413247**!
PR2079	ITM	**413478**
PR2080	ITM	**450400**
PR2081	ITM	**472560N**!
PR2082	ITM	**470605**!
PR2086	ITM	**413248**
PR2087	ITM	**470334**!
PR2088	ITM	450104
PR2092	ITM	**415984**!
PR2093	ITM	**417082**
PR2095	ITM	**473466**
PR2096	ITM	**412473**!
PR2097	ITM	**471733**
PR2099	ITM	**415449**!
PR2100	ITM	**411376**!
PR2101	ITM	**417344**!
PR2102	ITM	**417967**!
PR2105	ITM	**471564**
PR2106	ITM	**471766**!
PR2107	ITM	**471567**!
PR2108	ITM	**413246**
PR2111	ITM	**412473**!
PR2112	ITM	**471763**
PR2114	ITM	**415449**!
PR2115	ITM	**416921**!
PR2116	ITM	**415449**!
PR2121	ITM	**472492**!
PR2122	ITM	**471271**!
PR2127	ITM	**470898**
PR2128	ITM	**416404**!
PR2131	ITM	**415302**
PR2132	ITM	**416891**!
PR2134	ITM	**417549**!
PR2135	ITM	**415483**
PR2136	ITM	**415483**
PR2137	ITM	**415449**!
PR2139	ITM	**455434**
PR2140	ITM	**416664**!
PR2143	ITM	**416664**!
PR2145	ITM	240731
PR2147	ITM	8421S
PR2148	ITM	240414
PR2150	ITM	**473237**!
PR2151	ITM	340210
PR2156	ITM	**451182**
PR2157	ITM	**473214**!
PR2161	ITM	**416024**
PR2165	ITM	**412861**
PR2169	ITM	**471689**!
PR2170	ITM	**417073**
PR2174	ITM	240151
PR2176	ITM	**415001**!
PR2183	ITM	6863S!
PR2184	ITM	5458
PR2189	ITM	**472409**!
PR2190	ITM	**472492**!
PR2194	ITM	**471076**
PR2197	ITM	**415303**!
PR2198	ITM	227040
PR2198	ITM	70X90X10!
PR2200	ITM	3392
PR2202	ITM	3392
PR2210	ITM	**451143**
PR2211	ITM	340787
PR2217	ITM	8168=
PR2219	ITM	**416273**
PR2223	ITM	6241S
PR2224	ITM	8133S
PR2225	ITM	**415988**
PR2226	ITM	5406
PR2227	ITM	343105
PR2227	ITM	7399S!
PR2229	ITM	340210
PR2230	ITM	**415458**!
PR2231	ITM	7392S=
PR2238	ITM	200851
PR2241	ITM	**413478**
PR2243	ITM	**470605**!
PR2244	ITM	**470605**!
PR2245	ITM	2503
PR2245	ITM	2503N
PR2246	ITM	**415449**!
PR2247	ITM	**411376**!
PR2249	ITM	**473235**!
PR2253	ITM	**470954**!
PR2257	ITM	**417433**!
PR2258	ITM	**417355**!
PR2259	ITM	5405
PR2262	ITM	5408
PR2263	ITM	**417343**!
PR2264	ITM	**417316**!
PR2267	ITM	**417316**!
PR2270	ITM	**455005**
PR2272	ITM	**474264**
PR2274	ITM	**471862**
PR2276	ITM	**417349**
PR2277	ITM	**417349**!
PR2278	ITM	**417349**!
PR2279	ITM	**417349**
PR2280	ITM	**417349**!
PR2283	ITM	6532S=
PR2286	ITM	**455280**
PR2287	ITM	**415371**
PR2288	ITM	456618
PR2289	ITM	6754S=
PR2290	ITM	**415007**
PR2293	ITM	**417316**!
PR2294	ITM	**415960**
PR2296	ITM	**415960**!
PR2302	ITM	**471570**!
PR2310	ITM	**415254**
PR2312	ITM	**473203**
PR2317	ITM	**455655**!
PR2320	ITM	**415001**!
PR2325	ITM	**471141**!
PR2326	ITM	**416921**!
PR2328	ITM	**480630**!
PR2330	ITM	**472164**!
PR2331	ITM	**415995**!
PR2331	ITM	**415995**!
PR2332	ITM	**415995**!
PR2332	ITM	**415995**!
PR2334	ITM	**415995**!
PR2336	ITM	**416404**!
PR2338	ITM	**416404**!
PR2339	ITM	**417433**!
PR2340	ITM	**417433**!
PR2341	ITM	**417433**!
PR2352	ITM	**473243**
PR2353	ITM	**415138**!
PR2355	ITM	**417621**!
PR2356	ITM	**417621**
PR2360	ITM	343105
PR2360	ITM	7399S!
PR2361	ITM	**473010**!
PR2363	ITM	**415442**!
PR2363	ITM	55442
PR2365	ITM	**417487**!
PR2365	ITM	**417487**
PR2367	ITM	**417487**!
PR2367	ITM	**417487**
PR2368	ITM	**450143**
PR2369	ITM	**417487**!
PR2369	ITM	**417487**
PR2370	ITM	**471554**!
PR2371	ITM	**416288**!
PR2373	ITM	**476470**!
PR2374	ITM	**476470**
PR2375	ITM	**476470**
PR2376	ITM	**476470**
PR2377	ITM	**471192**
PR2381	ITM	**416292**
PR2384	ITM	**484054**
PR2386	ITM	**476470**
PR2387	ITM	**415082**
PR2390	ITM	**476838**!
PR2396	ITM	**415043**
PR2398	ITM	50149
PR2399	ITM	**415995**!
PR2399	ITM	**415995**!
PR2401	ITM	**472311**!
PR2402	ITM	1037
PR2404	ITM	**417171**!
PR2407	ITM	417490
PR2409	ITM	**417491**
PR2410	ITM	**472164**!
PR2411	ITM	5976S
PR2414	ITM	**416624**!
PR2415	ITM	**412920**!
PR2416	ITM	**416624**!
PR2419	ITM	**417356**!
PR2421	ITM	55329=
PR2423	ITM	**416624**!
PR2425	ITM	**416624**!
PR2427	ITM	456744N
PR2431	ITM	**415138**!
PR2436	ITM	**471413**!
PR2438	ITM	351487
PR2442	ITM	**415088**
PR2443	ITM	**415088**
PR2444	ITM	**415088**
PR2445	ITM	**455356**
PR2447	ITM	**415088**
PR2447	ITM	**415088**!
PR2449	ITM	**415088**!
PR2449	ITM	**415088**
PR2450	ITM	**415088**
PR2452	ITM	5865
PR2456	ITM	455310
PR2457	ITM	**416229**
PR2461	ITM	**415072**
PR2462	ITM	**417191**
PR2463	ITM	**415437**
PR2463	ITM	**415437**!
PR2467	ITM	**417542**
PR2468	ITM	**417492**
PR2469	ITM	**415991**!
PR2469	ITM	**415991**
PR2471	ITM	**471271**!
PR2474	ITM	55246=
PR2477	ITM	415983N!
PR2479	ITM	**415303**!
PR2481	ITM	**416404**!
PR2482	ITM	**416154**!
PR2483	ITM	**415088**
PR2484	ITM	**473228**!
PR2485	ITM	**417354**!
PR2486	ITM	7840S
PR2487	ITM	**417354**!
PR2488	ITM	**415483**
PR2489	ITM	**455434**
PR2490	ITM	**3395**!
PR2490	ITM	352444
PR2491	ITM	**471785**!
PR2493	ITM	**417493**
PR2494	ITM	**415711**
PR2495	ITM	55646=
PR2496	ITM	**455858**
PR2500	ITM	**416332**!
PR2502	ITM	472951
PR2502	ITM	**474252**

! Industrial Size/Type
= The U.S. customer service number is 877-4-TIMKEN. The Canadian customer service numbers are 800-565-4927 (English) and 800-565-0438 (French-Canadian).

Mfr. No.	Name	Zero Duplication or Recommended Industrial
PR2507	ITM	417211!
PR2510	ITM	5965
PR2512	ITM	471689!
PR2513	ITM	473237!
PR2516	ITM	456305
PR2518	ITM	415379
PR2521	ITM	415937!
PR2522	ITM	417501
PR2524	ITM	415379
PR2526	ITM	471442!
PR2527	ITM	450482
PR2530	ITM	416339
PR2531	ITM	474281!
PR2535	ITM	457294
PR2536	ITM	473213!
PR2537	ITM	457294
PR2538	ITM	457294
PR2540	ITM	450400
PR2541	ITM	473238!
PR2542	ITM	471267!
PR2543	ITM	455032!
PR2545	ITM	455820
PR2547	ITM	417494
PR2548	ITM	415001!
PR2549	ITM	417205!
PR2558	ITM	455008
PR2560	ITM	415021
PR2562	ITM	415035
PR2563	ITM	415027
PR2564	ITM	415035
PR2570	ITM	416339
PR2572	ITM	416339
PR2574	ITM	417344!
PR2575	ITM	415284
PR2577	ITM	416339
PR2577	ITM	455031!
PR2578	ITM	417316
PR2579	ITM	416339
PR2580	ITM	415187
PR2581	ITM	415035
PR2582	ITM	416345!
PR2585	ITM	417495
PR2586	ITM	415035
PR2587	ITM	471795
PR2588	ITM	415035
PR2589	ITM	471649!
PR2590	ITM	470682
PR2593	ITM	415035
PR2595	ITM	415035
PR2597	ITM	417344!
PR2606	ITM	417495
PR2607	ITM	417316!
PR2609	ITM	470380!
PR2609	ITM	472189A!
PR2612	ITM	416706!
PR2613	ITM	470898
PR2618	ITM	480210!
PR2622	ITM	416888!
PR2623	ITM	470625!
PR2624	ITM	416327
PR2625	ITM	470898
PR2626	ITM	416327
PR2628	ITM	455471
PR2631	ITM	417484!
PR2632	ITM	415559
PR2633	ITM	471689!
PR2634	ITM	415559
PR2636	ITM	417499
PR2637	ITM	417499
PR2643	ITM	470954
PR2644	ITM	472492!
PR2647	ITM	417357
PR2648	ITM	471224!
PR2649	ITM	415142
PR2650	ITM	455194
PR2653	ITM	353131
PR2653	ITM	471231!
PR2654	ITM	471413!
PR2656	ITM	471267!
PR2657	ITM	416556!
PR2657	ITM	472157
PR2664	ITM	470380!
PR2667	ITM	6985
PR2668	ITM	471984
PR2670	ITM	473227!
PR2673	ITM	473464
PR2675	ITM	415958
PR2677	ITM	323126
PR2677	ITM	474278
PR2678	ITM	415425
PR2680	ITM	415035
PR2682	ITM	481443!
PR2688	ITM	471138!
PR2689	ITM	417514
PR2690	ITM	415036
PR2691	ITM	417247!
PR2692	ITM	415036
PR2694	ITM	455037
PR2696	ITM	471870!
PR2697	ITM	471766!
PR2698	ITM	417513
PR2699	ITM	416891!
PR2700	ITM	417554!
PR2701	ITM	473464
PR2702	ITM	455197N
PR2703	ITM	473010!
PR2704	ITM	416380!
PR2705	ITM	470088
PR2706	ITM	455079!
PR2707	ITM	416380!
PR2708	ITM	415196!
PR2709	ITM	471649!
PR2710	ITM	473214!
PR2711	ITM	415991
PR2711	ITM	415991!
PR2712	ITM	415991
PR2712	ITM	415991!
PR2713	ITM	473214!
PR2715	ITM	416888!
PR2717	ITM	417344!
PR2719	ITM	415437
PR2721	ITM	473231!
PR2724	ITM	416149
PR2726	ITM	415995!
PR2726	ITM	415995!
PR2728	ITM	472492!
PR2730	ITM	471689!
PR2731	ITM	473454
PR2732	ITM	416153!
PR2740	ITM	416135!
PR2741	ITM	416345!
PR2742	ITM	415045!
PR2743	ITM	471766!
PR2744	ITM	471442!
PR2745	ITM	415047
PR2746	ITM	417525
PR2747	ITM	417533
PR2749	ITM	415284
PR2751	ITM	415138!
PR2759	ITM	417538
PR2760	ITM	415711
PR2761	ITM	471649!
PR2764	ITM	471643!
PR2767	ITM	470334!
PR2772	ITM	455203
PR2773	ITM	416137
PR2774	ITM	416137
PR2775	ITM	472164!
PR2777	ITM	416137
PR2778	ITM	471224!
PR2779	ITM	416321
PR2780	ITM	416149
PR2781	ITM	473475
PR2782	ITM	416149
PR2784	ITM	417356!
PR2785	ITM	473236!
PR2786	ITM	416149
PR2787	ITM	472258!
PR2788	ITM	470954!
PR2791	ITM	416154!
PR2792	ITM	416154!
PR2793	ITM	416154!
PR2797	ITM	416154!
PR2798	ITM	417534
PR2800	ITM	471766!
PR2801	ITM	416158
PR2802	ITM	472319
PR2803	ITM	6815
PR2804	ITM	416158
PR2806	ITM	350936
PR2807	ITM	451857
PR2808	ITM	471504
PR2809	ITM	470380!
PR2809	ITM	472189A!
PR2810	ITM	473231!
PR2811	ITM	240698
PR2812	ITM	6547
PR2813	ITM	410987!
PR2814	ITM	451078!
PR2815	ITM	200642
PR2816	ITM	410737!
PR2820	ITM	416167!
PR2821	ITM	416167!
PR2823	ITM	474253
PR2824	ITM	417539!
PR2825	ITM	353131
PR2825	ITM	471231!
PR2826	ITM	412920!
PR2827	ITM	415725!
PR2828	ITM	415449!
PR2829	ITM	473240!
PR2830	ITM	471231!
PR2831	ITM	471567!
PR2833	ITM	416267!
PR2836	ITM	416130!
PR2837	ITM	417353!
PR2842	ITM	417522
PR2843	ITM	416070
PR2844	ITM	417252
PR2845	ITM	471272!
PR2848	ITM	416557
PR2853	ITM	450412
PR2854	ITM	415351!
PR2856	ITM	415066
PR2857	ITM	415066
PR2861	ITM	417269!
PR2863	ITM	417273
PR2864	ITM	416865!
PR2865	ITM	416865!
PR2866	ITM	416865!
PR2867	ITM	417258
PR2868	ITM	417258
PR2870	ITM	417262!
PR2871	ITM	224015
PR2872	ITM	417262!
PR2874	ITM	455008
PR2876	ITM	473232!
PR2877	ITM	476842
PR2879	ITM	412473!
PR2887	ITM	471255!
PR2889	ITM	417546!
PR2890	ITM	415035
PR2891	ITM	417358
PR2892	ITM	470530!
PR2893	ITM	200640
PR2895	ITM	452222!
PR2896	ITM	417551
PR2899	ITM	472070
PR2901	ITM	472924!
PR2906	ITM	473214
PR2908	ITM	417541
PR2909	ITM	417541
PR2910	ITM	410708
PR2911	ITM	417344!
PR2912	ITM	418029!
PR2914	ITM	473228
PR2915	ITM	473215!
PR2916	ITM	415458!
PR2917	ITM	415437
PR2919	ITM	417351!
PR2920	ITM	472015!
PR2921	ITM	471264!
PR2923	ITM	411394!
PR2924	ITM	415379
PR2925	ITM	210945
PR2926	ITM	415379
PR2927	ITM	412473!
PR2928	ITM	415991
PR2928	ITM	415991!
PR2929	ITM	472179
PR2930	ITM	417547
PR2932	ITM	412920!
PR2934	ITM	417354!
PR2935	ITM	415645!
PR2935	ITM	455104
PR2937	ITM	417350!
PR2938	ITM	470712!
PR2940	ITM	417254
PR2942	ITM	415938
PR2943	ITM	416271!
PR2944	ITM	417546!
PR2945	ITM	417495
PR2946	ITM	415938
PR2947	ITM	415938
PR2948	ITM	417360
PR2950	ITM	417555!
PR2951	ITM	417555!
PR2956	ITM	480630!
PR2960	ITM	417542
PR2961	ITM	417542
PR2963	ITM	471787!
PR2964	ITM	481568!
PR2965	ITM	417549!
PR2966	ITM	416664!
PR2969	ITM	476470
PR2970	ITM	417554!
PR2972	ITM	417554!
PR2973	ITM	416288!
PR2974	ITM	481163!
PR2975	ITM	55357
PR2976	ITM	416107!
PR2977	ITM	472354!
PR2978	ITM	412040
PR2979	ITM	416107!
PR2980	ITM	417549!
PR2981	ITM	416107!
PR2983	ITM	417362!
PR2985	ITM	55392=

! Industrial Size/Type
= The U.S. customer service number is 877-4-TIMKEN. The Canadian customer service numbers are 800-565-4927 (English) and 800-565-0438 (French-Canadian).

Mfr. No.	Name	Zero Duplication or Recommended Industrial
PR2986	ITM	472164
PR2989	ITM	417349!
PR2992	ITM	417544
PR2994	ITM	471141!
PR2995	ITM	472185!
PR2999	ITM	416666
PR3000	ITM	471750!
PR3001	ITM	473475
PR3002	ITM	473444!
PR3004	ITM	470334!
PR3007	ITM	473225!
PR3008	ITM	417499
PR3009	ITM	473226
PR3011	ITM	40154S
PR3014	ITM	473010!
PR3018	ITM	415683
PR3020	ITM	456305
PR3021	ITM	415683
PR3023	ITM	416476!
PR3024	ITM	416476!
PR3025	ITM	417365
PR3026	ITM	410102
PR3028	ITM	417365
PR3031	ITM	455330!
PR3032	ITM	472299
PR3035	ITM	471801!
PR3036	ITM	470625!
PR3043	ITM	473231!
PR3044	ITM	340724!
PR3048	ITM	473228!
PR3049	ITM	471195!
PR3050	ITM	473455!
PR3052	ITM	471195!
PR3056	ITM	417191
PR3058	ITM	473454
PR3060	ITM	473205!
PR3062	ITM	471692!
PR3063	ITM	55692=
PR3066	ITM	472258!
PR3067	ITM	410102
PR3068	ITM	472924!
PR3070	ITM	471316
PR3076	ITM	472572!
PR3077	ITM	455480!
PR3080	ITM	415072
PR3082	ITM	415294!
PR3083	ITM	415294!
PR3085	ITM	415294!
PR3088	ITM	55108=
PR3089	ITM	472439
PR3090	ITM	43078S
PR3091	ITM	472299
PR3092	ITM	55108=
PR3099	ITM	417562
PR3102	ITM	1170
PR3108	ITM	471737
PR3111	ITM	415058
PR3113	ITM	470380!
PR3114	ITM	415854
PR3115	ITM	417563
PR3116	ITM	417563
PR3117	ITM	451948
PR3118	ITM	1992
PR3119	ITM	417563
PR3120	ITM	455480!
PR3124	ITM	55108=
PR3125	ITM	472164!
PR3127	ITM	416229
PR3128	ITM	450639
PR3130	ITM	473234!
PR3131	ITM	40337S
PR3133	ITM	470625!
PR3134	ITM	416364!
PR3136	ITM	416364!
PR3137	ITM	416364!
PR3138	ITM	470625!
PR3140	ITM	472179
PR3142	ITM	472572!
PR3143	ITM	417298
PR3145	ITM	417596
PR3150	ITM	50402
PR3151	ITM	471760
PR3154	ITM	43076S
PR3155	ITM	410694!
PR3156	ITM	473241
PR3157	ITM	412725
PR3162	ITM	416008
PR3165	ITM	416239!
PR3166	ITM	416239!
PR3167	ITM	473016!
PR3168	ITM	472492!
PR3173	ITM	415867
PR3174	ITM	415867
PR3176	ITM	416077
PR3178	ITM	416102
PR3179	ITM	415116
PR3181	ITM	410987!
PR3182	ITM	473367
PR3185	ITM	473214!
PR3186	ITM	471646!
PR3189	ITM	471267!
PR3193	ITM	472213
PR3194	ITM	473231!
PR3195	ITM	472311!
PR3196	ITM	453065
PR3201	ITM	472070
PR3202	ITM	474274
PR3204	ITM	473458!
PR3206	ITM	457097=
PR3207	ITM	55524
PR3208	ITM	473238!
PR3209	ITM	471272!
PR3210	ITM	412027
PR3213	ITM	415551
PR3216	ITM	1184
PR3221	ITM	417598
PR3224	ITM	455406!
PR3228	ITM	471466!
PR3230	ITM	416664!
PR3231	ITM	417600
PR3233	ITM	473234!
PR3236	ITM	415138!
PR3237	ITM	470605!
PR3239	ITM	417601
PR3242	ITM	343105
PR3242	ITM	7399S!
PR3250	ITM	472492!
PR3251	ITM	474265
PR3252	ITM	414268!
PR3254	ITM	415958
PR3259	ITM	473210
PR3260	ITM	471854!
PR3261	ITM	417602!
PR3262	ITM	417602!
PR3263	ITM	471854!
PR3264	ITM	470954!
PR3267	ITM	415683
PR3269	ITM	412725
PR3270	ITM	472492!
PR3272	ITM	43078S
PR3277	ITM	417602!
PR3278	ITM	471766!
PR3279	ITM	330385!
PR3281	ITM	471224!
PR3282	ITM	340815
PR3283	ITM	471466!
PR3284	ITM	473440!
PR3285	ITM	473231!
PR3286	ITM	473215!
PR3287	ITM	55301S
PR3289	ITM	471466!
PR3290	ITM	471554!
PR3291	ITM	471442!
PR3292	ITM	471554!
PR3293	ITM	471498
PR3296	ITM	470606!
PR3297	ITM	473454
PR3298	ITM	415991
PR3298	ITM	415991!
PR3300	ITM	416657
PR3306	ITM	471255!
PR3307	ITM	473425
PR3308	ITM	455476
PR3309	ITM	471504
PR3310	ITM	470950!
PR3310	ITM	6241S
PR3312	ITM	418028
PR3313	ITM	413247!
PR3314	ITM	417022
PR3316	ITM	43089S
PR3318	ITM	353120
PR3319	ITM	455462
PR3320	ITM	473233!
PR3323	ITM	471787!
PR3324	ITM	481834
PR3326	ITM	413472
PR3329	ITM	2260
PR3330	ITM	1167
PR3331	ITM	224252
PR3338	ITM	481481
PR3340	ITM	415090
PR3344	ITM	55078S
PR3345	ITM	472572!
PR3346	ITM	240698
PR3347	ITM	417073
PR3348	ITM	471870!
PR3349	ITM	471526!
PR3351	ITM	473454
PR3352	ITM	471649!
PR3354	ITM	471868
PR3355	ITM	55329=
PR3356	ITM	471692!
PR3357	ITM	473441
PR3359	ITM	330385!
PR3360	ITM	240470
PR3361	ITM	471692!
PR3364	ITM	473230!
PR3366	ITM	417191
PR3369	ITM	417020
PR3370	ITM	417020
PR3373	ITM	413472
PR3378	ITM	415227!
PR3379	ITM	417571
PR3380	ITM	8996S=
PR3381	ITM	415991
PR3381	ITM	415991!
PR3382	ITM	472572!
PR3383	ITM	471801!
PR3385	ITM	470334!
PR3386	ITM	471571
PR3391	ITM	415871
PR3392	ITM	471766!
PR3395	ITM	415483
PR3396	ITM	415066
PR3398	ITM	471354!
PR3399	ITM	471649!
PR3402	ITM	471281!
PR3412	ITM	417606
PR3416	ITM	417608
PR3419	ITM	473238!
PR3420	ITM	473423
PR3421	ITM	417606
PR3435	ITM	471763
PR3444	ITM	472492!
PR3446	ITM	224040
PR3446	ITM	40X60X10!
PR3452	ITM	470565!
PR3453	ITM	472397!
PR3454	ITM	472164!
PR3456	ITM	470590
PR3458	ITM	471192
PR3460	ITM	473214!
PR3461	ITM	473214!
PR3464	ITM	470354
PR3470	ITM	1012
PR3470	ITM	1012N
PR3470	ITM	45X62X8!
PR3474	ITM	1062=
PR3476	ITM	473228!
PR3477	ITM	471795
PR3479	ITM	471766!
PR3481	ITM	472299
PR3484	ITM	1208
PR3484	ITM	48X72X7!
PR3485	ITM	226020
PR3485	ITM	60X80X8!
PR3486	ITM	222242
PR3487	ITM	224045
PR3487	ITM	40X62X12!
PR3488	ITM	471504
PR3490	ITM	450593!
PR3495	ITM	472164!
PR3498	ITM	471224!
PR3503	ITM	471413!
PR3504	ITM	471558
PR3506	ITM	415302
PR3507	ITM	1077=
PR3508	ITM	472299
PR3509	ITM	473228!
PR3510	ITM	471224!
PR3511	ITM	471192
PR3517	ITM	471141!
PR3518	ITM	413248
PR3520	ITM	471271!
PR3521	ITM	415045!
PR3524	ITM	415138!
PR3525	ITM	416158
PR3526	ITM	417584
PR3527	ITM	417511
PR3530	ITM	415072
PR3531	ITM	416029N!
PR3532	ITM	416364!
PR3533	ITM	416239!
PR3540	ITM	473016!
PR3547	ITM	470954!
PR3548	ITM	416041
PR3551	ITM	416135!
PR3552	ITM	416332!
PR3557	ITM	471870!
PR3560	ITM	473227
PR3566	ITM	473444!
PR3568	ITM	471652
PR3569	ITM	471211
PR3570	ITM	471801!
PR3571	ITM	416158
PR3582	ITM	416394
PR3586	ITM	417605
PR3588	ITM	416257

! Industrial Size/Type

= The U.S. customer service number is 877-4-TIMKEN. The Canadian customer service numbers are 800-565-4927 (English) and 800-565-0438 (French-Canadian).

Mfr. No.	Name	Zero Duplication or Recommended Industrial
PR3592	ITM	340400
PR3599	ITM	**473427**
PR3602	ITM	**417606**
PR3609	ITM	50199S!
PR3609	ITM	6863S!
PR3610	ITM	**471264**!
PR3611	ITM	**471264**!
PR3612	ITM	**472029**
PR3614	ITM	**417608**
PR3618	ITM	**473234**!
PR3622	ITM	**470774**!
PR3623	ITM	**471271**!
PR3624	ITM	**417262**!
PR3628	ITM	**473226**
PR3630	ITM	**474255**
PR3631	ITM	**417316**!
PR3632	ITM	**417608**
PR3634	ITM	**416271**!
PR3640	ITM	**471646**!
PR3643	ITM	**472560N**!
PR3644	ITM	**474255**
PR3648	ITM	**471649**!
PR3649	ITM	1012
PR3649	ITM	1012N
PR3649	ITM	45X62X8!
PR3654	ITM	**471692**!
PR3656	ITM	**471692**!
PR3698	ITM	**473454**
PR3701	ITM	**471854**!
PR3702	ITM	**415035**
PR3703	ITM	**471316**
PR3709	ITM	**416654**!
PR3711	ITM	**416654**!
PR3712	ITM	**417487**!
PR3712	ITM	**417487**
PR3725	ITM	**471689**!
PR3726	ITM	**418028**
PR3727	ITM	**450084**!
PR3730	ITM	**470530**!
PR3731	ITM	**417159**
PR3732	ITM	**472397**!
PR3734	ITM	**416738**!
PR3735	ITM	**473450**!
PR3736	ITM	**470530**!
PR3737	ITM	**410496**!
PR3738	ITM	**473466**
PR3739	ITM	**473467**
PR3742	ITM	**416664**!
PR3744	ITM	**350435**
PR3745	ITM	210914
PR3746	ITM	**418028**
PR3747	ITM	**472016**!
PR3750	ITM	**473447**
PR3756	ITM	**472029**
PR3757	ITM	**410752**
PR3761	ITM	**472636**!
PR3763	ITM	**473228**
PR3766	ITM	**413470**!
PR3767	ITM	**410102**
PR3768	ITM	**471554**!
PR3769	ITM	**471689**!
PR3773	ITM	**473236**!
PR3775	ITM	**417343**!
PR3776	ITM	**451845**
PR3782	ITM	**416664**!
PR3784	ITM	**416664**
PR3787	ITM	**416664**!
PR3789	ITM	**412861**
PR3790	ITM	**412861**
PR3793	ITM	**416865**!
PR3795	ITM	**323138**!
PR3796	ITM	**455151**
PR3804	ITM	**471652**
PR3806	ITM	**416956**
PR3811	ITM	**472299**
PR3812	ITM	**415960**
PR3814	ITM	**472475**
PR3815	ITM	**473466**
PR3819	ITM	**417269**!
PR3828	ITM	**455858**
PR3829	ITM	**416156**
PR3830	ITM	1094=
PR3832	ITM	**473203**
PR3835	ITM	**471737**
PR3837	ITM	**472572**!
PR3839	ITM	**471651**
PR3841	ITM	340797
PR3842	ITM	222510
PR3842	ITM	25X35X7!
PR3843	ITM	456744N
PR3844	ITM	331173
PR3858	ITM	**471195**!
PR3859	ITM	**415991**
PR3859	ITM	**415991**!
PR3866	ITM	**472354**!
PR3867	ITM	**471692**!
PR3868	ITM	**473229**!
PR3879	ITM	**417356**!
PR3888	ITM	416556!
PR3888	ITM	**472157**
PR3890	ITM	**473016**!
PR3891	ITM	**471735**
PR3892	ITM	43078S
PR3893	ITM	**416557**
PR3895	ITM	7600S
PR3898	ITM	**417530**
PR3902	ITM	**416891**!
PR3904	ITM	**450984**
PR3908	ITM	**471224**!
PR3909	ITM	**471705**!
PR3911	ITM	**470898**
PR3912	ITM	**471224**!
PR3916	ITM	**455396**
PR3919	ITM	**471750**!
PR3920	ITM	**415697**!
PR3923	ITM	343186
PR3924	ITM	**473224**!
PR3926	ITM	**472082**
PR3927	ITM	**417492**
PR3928	ITM	**416135**!
PR3929	ITM	**450307**
PR3933	ITM	224820
PR3933	ITM	48X62X8!
PR3935	ITM	**417509**
PR3944	ITM	**471801**!
PR3950	ITM	**415150**!
PR3951	ITM	**471267**!
PR3962	ITM	**471231**!
PR3964	ITM	**415483**
PR3969	ITM	50490=
PR3970	ITM	**450326**
PR3971	ITM	**472258**!
PR3975	ITM	227040
PR3975	ITM	70X90X10!
PR3982	ITM	**450604**
PR3985	ITM	**473423**
PR3988	ITM	**471532**
PR3990	ITM	**471870**!
PR3992	ITM	**415984**!
PR3993	ITM	**415725**!
PR3998	ITM	**473227**!
PR3999	ITM	**415036**
PR4040	ITM	5M89
PR4045	ITM	5M867
PR4048	ITM	5MR71
PR4109	ITM	5M289
PR4112	ITM	5MR1008
PR4113	ITM	5MR1009
PR4116	ITM	5M293
PR4231	ITM	5M559
PR4501	ITM	1097N
PR4506	ITM	**473241**
PR4507	ITM	**472164**!
PR4508	ITM	**415088**
PR4509	ITM	**416364**!
PR4510	ITM	**471571**
PR4511	ITM	**473215**!
PR4514	ITM	343186
PR4515	ITM	**416921**!
PR4517	ITM	**473211**!
PR4519	ITM	**473445**
PR4521	ITM	**471267**!
PR4524	ITM	**455584**
PR4528	ITM	**476470**
PR4530	ITM	224820
PR4530	ITM	48X62X8!
PR4531	ITM	1977
PR4543	ITM	**415867**
PR4544	ITM	1174
PR4544	ITM	38X52X8.5!
PR4548	ITM	**470354**
PR4549	ITM	**415958**
PR4550	ITM	**417172**
PR4551	ITM	**472572**!
PR4552	ITM	40555
PR4552	ITM	40555S!
PR4553	ITM	**473467**
PR4557	ITM	**473466**
PR4560	ITM	**472016**!
PR4561	ITM	**471271**!
PR4565	ITM	**474276**!
PR4566	ITM	**481181**!
PR4569	ITM	**471649**!
PR4572	ITM	**472475**
PR4573	ITM	**417262**!
PR4577	ITM	321460
PR4583	ITM	33X50X12!
PR4593	ITM	**416107**!
PR4595	ITM	**471854**!
PR4597	ITM	**472179**
PR4599	ITM	**350435**
PR4604	ITM	**471466**!
PR4605	ITM	**417601**
PR4606	ITM	240733
PR4607	ITM	**471689**!
PR4609	ITM	**471652**
PR4610	ITM	**471760**
PR4613	ITM	**473448**
PR4614	ITM	41026S
PR4616	ITM	43078S
PR4617	ITM	**416624**!
PR4618	ITM	**415995**!
PR4618	ITM	**415995**!
PR4619	ITM	**415379**
PR4620	ITM	**415938**
PR4621	ITM	**415027**
PR4627	ITM	55199=
PR4629	ITM	50883=
PR4634	ITM	**416956**
PR4636	ITM	**415483**
PR4638	ITM	**417344**!
PR4639	ITM	**470605**!
PR4640	ITM	**476470**
PR4641	ITM	**417211**!
PR4643	ITM	416556!
PR4643	ITM	**472157**
PR4650	ITM	**330699**
PR4654	ITM	**410825**
PR4655	ITM	455966
PR4660	ITM	**472354**!
PR4662	ITM	**473235**!
PR4666	ITM	1180
PR4666	ITM	41X55X7!
PR4667	ITM	**471737**
PR4668	ITM	**471571**
PR4672	ITM	**455566**
PR4673	ITM	**413248**
PR4675	ITM	**417134**
PR4676	ITM	**472747**
PR4677	ITM	**474278**
PR4678	ITM	**416154**!
PR4679	ITM	**473214**!
PR4685	ITM	**471316**
PR4686	ITM	**470088**
PR4690	ITM	1169
PR4692	ITM	**472070**
PR4695	ITM	**472070**
PR4696	ITM	**471785**!
PR4698	ITM	**327303**!
PR4700	ITM	**471472**!
PR4704	ITM	**417597**
PR4708	ITM	**473197**
PR4710	ITM	**450446**
PR4711	ITM	**416271**!
PR4712	ITM	455251H
PR4715	ITM	**417247**!
PR4718	ITM	**471762**!
PR4719	ITM	312518!
PR4719	ITM	342518
PR4720	ITM	450177
PR4722	ITM	**471466**!
PR4723	ITM	6663S
PR4724	ITM	**471224**!
PR4725	ITM	450311
PR4726	ITM	**415449**!
PR4731	ITM	**417171**!
PR4735	ITM	**417254**
PR4736	ITM	**415379**
PR4737	ITM	**415449**!
PR4740	ITM	**471684**!
PR4742	ITM	**471870**!
PR4747	ITM	1979
PR4749	ITM	**471835**!
PR4750	ITM	**473317**
PR4757	ITM	203013
PR4758	ITM	**472636**!
PR4759	ITM	**411348**!
PR4761	ITM	**471554**!
PR4768	ITM	**473258**!
PR4770	ITM	1012
PR4770	ITM	1012N
PR4770	ITM	45X62X8!
PR4773	ITM	**415389**
PR4774	ITM	**416127**
PR4776	ITM	1097N
PR4780	ITM	223240
PR4780	ITM	32X48X8!
PR4782	ITM	**472324**!
PR4784	ITM	223840
PR4784	ITM	38X58X8!
PR4785	ITM	1177
PR4786	ITM	481371H=
PR4788	ITM	1176
PR4789	ITM	1180
PR4789	ITM	41X55X7!
PR4790	ITM	**473227**!
PR4791	ITM	1170
PR4792	ITM	1176

! Industrial Size/Type
= The U.S. customer service number is 877-4-TIMKEN. The Canadian customer service numbers are 800-565-4927 (English) and 800-565-0438 (French-Canadian).

Mfr. No.	Name	Zero Duplication or Recommended Industrial
PR4795	ITM	414045!
PR4797	ITM	55X82X12!
PR4801	ITM	1953
PR4801	ITM	42X60X7!
PR4802	ITM	223542
PR4802	ITM	35X55X11!
PR4808	ITM	473467
PR4809	ITM	481443!
PR4810	ITM	473242
PR4813	ITM	473237!
PR4814	ITM	472492!
PR4817	ITM	5976S
PR4818	ITM	471267!
PR4819	ITM	474253
PR4820	ITM	470328
PR4820	ITM	481213!
PR4822	ITM	471224!
PR4825	ITM	472354!
PR4826	ITM	473463
PR4829	ITM	415871
PR4831	ITM	417262!
PR4833	ITM	417556
PR4834	ITM	415867
PR4837	ITM	415458!
PR4838	ITM	415458!
PR4839	ITM	470898
PR4846	ITM	45187S
PR4847	ITM	415995!
PR4847	ITM	415995!
PR4848	ITM	473473
PR4849	ITM	412119!
PR4854	ITM	345146
PR4855	ITM	55030
PR4857	ITM	481073
PR4858	ITM	417191
PR4862	ITM	471570!
PR4864	ITM	416404!
PR4866	ITM	416706!
PR4868	ITM	472144!
PR4869	ITM	471646!
PR4870	ITM	473475
PR4871	ITM	417181!
PR4873	ITM	411245!
PR4874	ITM	1174
PR4874	ITM	38X52X8.5!
PR4880	ITM	472826!
PR4882	ITM	471529
PR4883	ITM	471765!
PR4884	ITM	417621!
PR4885	ITM	472164!
PR4888	ITM	471689!
PR4889	ITM	6703S
PR4890	ITM	352541
PR4891	ITM	416158
PR4892	ITM	415995!
PR4892	ITM	415995!
PR4893	ITM	352541
PR4895	ITM	471424!
PR4896	ITM	473212!
PR4898	ITM	417134
PR4900	ITM	473426
PR4901	ITM	472311!
PR4902	ITM	415449!
PR4907	ITM	416556!
PR4907	ITM	472157
PR4910	ITM	415991
PR4910	ITM	415991!
PR4912	ITM	450593!
PR4913	ITM	473205!
PR4915	ITM	417433!
PR4919	ITM	253099
PR4920	ITM	473231!
PR4922	ITM	6110=
PR4923	ITM	470950!
PR4923	ITM	6241S
PR4925	ITM	417601
PR4926	ITM	473438
PR4928	ITM	416239!
PR4930	ITM	415219
PR4931	ITM	455251=
PR4932	ITM	455308
PR4933	ITM	473367
PR4934	ITM	416282
PR4935	ITM	473232!
PR4936	ITM	417269!
PR4937	ITM	415023
PR4939	ITM	416380!
PR4942	ITM	473232!
PR4943	ITM	471554!
PR4945	ITM	450557
PR4945	ITM	471255!
PR4946	ITM	472810!
PR4948	ITM	472705!
PR4954	ITM	224015
PR4955	ITM	481163!
PR4956	ITM	417205!
PR4959	ITM	417486
PR4963	ITM	473212!
PR4964	ITM	473426
PR4965	ITM	473227!
PR4966	ITM	472475
PR4967	ITM	471868
PR4968	ITM	410737!
PR4969	ITM	6324S=
PR4970	ITM	470954!
PR4971	ITM	254287
PR4973	ITM	471570!
PR4974	ITM	471224!
PR4975	ITM	415437
PR4979	ITM	455121
PR4980	ITM	471466!
PR4983	ITM	415447
PR4985	ITM	413247!
PR4986	ITM	415001!
PR4988	ITM	472572!
PR4989	ITM	473215!
PR4990	ITM	50514
PR4991	ITM	417349!
PR4994	ITM	416239!
PR4997	ITM	416865!
PR5000	ITM	471526!
PR5001	ITM	471472!
PR5002	ITM	471549!
PR5003	ITM	471535!
PR5004	ITM	471551!
PR5005	ITM	471264!
PR5006	ITM	471255!
PR5007	ITM	471564
PR5008	ITM	471553!
PR5009	ITM	471554!
PR5010	ITM	471567!
PR5011	ITM	471643!
PR5012	ITM	471689!
PR5013	ITM	470390
PR5014	ITM	471570!
PR5016	ITM	471646!
PR5017	ITM	470590
PR5018	ITM	471730
PR5020	ITM	472951
PR5020	ITM	474252
PR5021	ITM	471649!
PR5022	ITM	471689!
PR5023	ITM	471733
PR5024	ITM	471760
PR5025	ITM	471619!
PR5029	ITM	50505=
PR5030	ITM	471705!
PR5031	ITM	471735
PR5032	ITM	471762!
PR5034	ITM	470712!
PR5035	ITM	471763
PR5036	ITM	471785!
PR5037	ITM	481792
PR5038	ITM	450604
PR5040	ITM	473427
PR5041	ITM	472475
PR5042	ITM	471765!
PR5043	ITM	471354!
PR5044	ITM	473205!
PR5047	ITM	471737
PR5048	ITM	471766!
PR5049	ITM	471787!
PR5050	ITM	471795
PR5051	ITM	471801!
PR5052	ITM	471808!
PR5053	ITM	471833
PR5055	ITM	473210
PR5056	ITM	472826!
PR5057	ITM	473211!
PR5058	ITM	473212!
PR5059	ITM	473213!
PR5060	ITM	481834
PR5062	ITM	472258!
PR5063	ITM	470774!
PR5064	ITM	471192
PR5065	ITM	473214!
PR5066	ITM	473215!
PR5067	ITM	471835!
PR5068	ITM	472843
PR5071	ITM	3395!
PR5071	ITM	352444
PR5072	ITM	473224!
PR5073	ITM	473016!
PR5074	ITM	473225!
PR5075	ITM	473226
PR5076	ITM	473227!
PR5077	ITM	470625!
PR5078	ITM	470380!
PR5079	ITM	473228!
PR5081	ITM	473440!
PR5083	ITM	471958
PR5085	ITM	472213
PR5086	ITM	472299
PR5088	ITM	470682
PR5089	ITM	473441
PR5090	ITM	473442!
PR5092	ITM	473230!
PR5093	ITM	473231!
PR5094	ITM	473010!
PR5095	ITM	473232!
PR5096	ITM	474274
PR5097	ITM	473444!
PR5101	ITM	473233!
PR5102	ITM	473234!
PR5103	ITM	473235!
PR5104	ITM	473236!
PR5105	ITM	473446
PR5106	ITM	471981
PR5107	ITM	473237!
PR5108	ITM	472164!
PR5109	ITM	472185!
PR5110	ITM	472179
PR5111	ITM	471141!
PR5112	ITM	471984
PR5118	ITM	472070
PR5119	ITM	473449!
PR5120	ITM	473450!
PR5122	ITM	473454
PR5123	ITM	472439
PR5124	ITM	472572!
PR5125	ITM	473238!
PR5126	ITM	473239!
PR5127	ITM	473240!
PR5128	ITM	472319
PR5129	ITM	473241
PR5130	ITM	472144!
PR5131	ITM	472394
PR5133	ITM	471424!
PR5134	ITM	471870!
PR5135	ITM	472492!
PR5136	ITM	472924!
PR5137	ITM	472397!
PR5138	ITM	473242
PR5139	ITM	412027
PR5140	ITM	410102
PR5144	ITM	55524
PR5145	ITM	451948
PR5146	ITM	472012
PR5147	ITM	473204
PR5148	ITM	470898
PR5149	ITM	471646!
PR5150	ITM	410308!
PR5150	ITM	473468
PR5151	ITM	472016!
PR5152	ITM	473243
PR5153	ITM	413470!
PR5154	ITM	416267!
PR5155	ITM	473244!
PR5156	ITM	472018
PR5157	ITM	473245!
PR5158	ITM	413472
PR5159	ITM	416268
PR5161	ITM	471272!
PR5162	ITM	473473
PR5163	ITM	471138!
PR5164	ITM	472636!
PR5165	ITM	412920!
PR5166	ITM	411376!
PR5167	ITM	415234!
PR5168	ITM	415259!
PR5169	ITM	55337
PR5170	ITM	472150
PR5172	ITM	411394!
PR5173	ITM	450133
PR5174	ITM	416444
PR5176	ITM	470565!
PR5177	ITM	413246
PR5178	ITM	413247!
PR5179	ITM	416271!
PR5180	ITM	410825
PR5181	ITM	416071
PR5182	ITM	412040
PR5183	ITM	413478
PR5184	ITM	411245!
PR5186	ITM	472029
PR5187	ITM	471271!
PR5188	ITM	470605!
PR5189	ITM	415449!
PR5190	ITM	416273
PR5191	ITM	455079!
PR5192	ITM	415082
PR5193	ITM	455655!
PR5194	ITM	355732
PR5196	ITM	415302
PR5197	ITM	415988
PR5198	ITM	417481
PR5200	ITM	410708
PR5201	ITM	415483

! Industrial Size/Type
= The U.S. customer service number is 877-4-TIMKEN. The Canadian customer service numbers are 800-565-4927 (English) and 800-565-0438 (French-Canadian).

Mfr. No.	Name	Zero Duplication or Recommended Industrial
PR5202	ITM	415458!
PR5203	ITM	417343!
PR5204	ITM	415007
PR5205	ITM	417082
PR5207	ITM	455151
PR5208	ITM	455008
PR5210	ITM	416664!
PR5211	ITM	415984!
PR5212	ITM	417316!
PR5213	ITM	415960
PR5214	ITM	416706!
PR5215	ITM	476281
PR5216	ITM	416282
PR5218	ITM	417485
PR5219	ITM	415303!
PR5220	ITM	417344!
PR5221	ITM	417488!
PR5222	ITM	416921!
PR5224	ITM	455144
PR5225	ITM	416956
PR5226	ITM	417159
PR5227	ITM	416654!
PR5228	ITM	417349!
PR5229	ITM	417350!
PR5230	ITM	415995!
PR5230	ITM	415995!
PR5231	ITM	417487
PR5231	ITM	417487!
PR5232	ITM	415088
PR5234	ITM	455019!
PR5235	ITM	416404!
PR5236	ITM	416288!
PR5237	ITM	417172
PR5238	ITM	416024
PR5239	ITM	456105
PR5240	ITM	455336
PR5241	ITM	417433!
PR5242	ITM	476470
PR5243	ITM	418028
PR5244	ITM	456305
PR5245	ITM	415023
PR5246	ITM	415085!
PR5247	ITM	455024
PR5248	ITM	416294!
PR5249	ITM	417191
PR5251	ITM	415025
PR5253	ITM	417492
PR5254	ITM	415991
PR5254	ITM	415991!
PR5255	ITM	415437
PR5256	ITM	415027
PR5257	ITM	417495
PR5258	ITM	415559
PR5259	ITM	415389
PR5260	ITM	415937!
PR5261	ITM	416125!
PR5262	ITM	417499
PR5263	ITM	415983N!
PR5264	ITM	415379
PR5265	ITM	416339
PR5266	ITM	415150!
PR5268	ITM	417210!
PR5269	ITM	416345!
PR5270	ITM	415697!
PR5271	ITM	417366!
PR5272	ITM	415958
PR5274	ITM	415034!
PR5276	ITM	457294
PR5277	ITM	415035
PR5278	ITM	417356!
PR5279	ITM	417357
PR5280	ITM	416130!
PR5281	ITM	415041
PR5282	ITM	455134!
PR5283	ITM	417511
PR5284	ITM	415142
PR5285	ITM	415043
PR5287	ITM	415295
PR5289	ITM	416556!
PR5289	ITM	472157
PR5290	ITM	415196!
PR5291	ITM	416891!
PR5292	ITM	415045!
PR5293	ITM	416137
PR5294	ITM	415058
PR5295	ITM	416556!
PR5295	ITM	472157
PR5296	ITM	415425
PR5297	ITM	416380!
PR5298	ITM	415047
PR5299	ITM	416149
PR5300	ITM	415060
PR5301	ITM	327303!
PR5302	ITM	417530
PR5303	ITM	416888!
PR5304	ITM	416892!
PR5305	ITM	416154!
PR5306	ITM	415351!
PR5307	ITM	415371
PR5308	ITM	416158
PR5309	ITM	415138!
PR5310	ITM	417247!
PR5311	ITM	415066
PR5312	ITM	416167!
PR5313	ITM	417269!
PR5315	ITM	415725!
PR5316	ITM	416865!
PR5335	ITM	415551
PR5337	ITM	416364!
PR5500	ITM	472258!
PR5501	ITM	417349!
PR5502	ITM	471571
PR5503	ITM	471766!
PR5504	ITM	471868
PR5505	ITM	471442!
PR5506	ITM	471554!
PR5507	ITM	471570!
PR5508	ITM	415711
PR5509	ITM	451078!
PR5510	ITM	473425
PR5511	ITM	471801!
PR5512	ITM	480844
PR5513	ITM	473010!
PR5514	ITM	472164!
PR5515	ITM	470334!
PR5516	ITM	472492!
PR5518	ITM	473464
PR5519	ITM	415001!
PR5520	ITM	416149
PR5521	ITM	471570!
PR5522	ITM	470088
PR5523	ITM	323119
PR5524	ITM	455249!
PR5525	ITM	471141!
PR5526	ITM	450593!
PR5527	ITM	417223
PR5529	ITM	474264
PR5530	ITM	450776!
PR5531	ITM	470328
PR5531	ITM	481213!
PR5533	ITM	471862
PR5534	ITM	473458!
PR5535	ITM	1097N
PR5537	ITM	473459
PR5538	ITM	484058
PR5539	ITM	331107N
PR5540	ITM	417513
PR5541	ITM	471795
PR5542	ITM	470950!
PR5542	ITM	6241S
PR5543	ITM	473367
PR5544	ITM	410524
PR5545	ITM	411253!
PR5550	ITM	470954!
PR5551	ITM	471466!
PR5552	ITM	481834
PR5553	ITM	415001!
PR5555	ITM	472354!
PR5557	ITM	415138!
PR5558	ITM	413248
PR5559	ITM	416135!
PR5561	ITM	1094=
PR5562	ITM	416271!
PR5563	ITM	470605!
PR5564	ITM	415449!
PR5565	ITM	455005
PR5566	ITM	455556
PR5567	ITM	417350!
PR5568	ITM	417351!
PR5569	ITM	417488!
PR5570	ITM	417621!
PR5571	ITM	417171!
PR5573	ITM	412473!
PR5574	ITM	416624!
PR5575	ITM	416332!
PR5576	ITM	415263
PR5577	ITM	415487
PR5577	ITM	417555!
PR5578	ITM	415036
PR5579	ITM	456641
PR5580	ITM	415284
PR5581	ITM	417541
PR5582	ITM	417353!
PR5586	ITM	417355!
PR5587	ITM	416327
PR5588	ITM	471820
PR5589	ITM	472636!
PR5591	ITM	452023=
PR5593	ITM	416664!
PR5595	ITM	470954!
PR5596	ITM	476838!
PR5597	ITM	417507
PR5598	ITM	471195!
PR5599	ITM	417196!
PR5600	ITM	416156
PR5602	ITM	417542
PR5603	ITM	417549!
PR5604	ITM	417278
PR5610	ITM	331228H
PR5611	ITM	471651
PR5615	ITM	473258!
PR5620	ITM	410737!
PR5621	ITM	55108=
PR5622	ITM	473459=
PR5623	ITM	9845
PR5624	ITM	473423
PR5625	ITM	416921!
PR5627	ITM	410308!
PR5627	ITM	473468
PR5628	ITM	471270!
PR5629	ITM	9569S
PR5631	ITM	415991
PR5631	ITM	415991!
PR5632	ITM	416888
PR5633	ITM	416273
PR5634	ITM	416297
PR5636	ITM	417606
PR5638	ITM	415995!
PR5638	ITM	415995!
PR5642	ITM	471570!
PR5643	ITM	472258!
PR5644	ITM	417433=
PR5645	ITM	457291
PR5646	ITM	416364!
PR5647	ITM	417316!
PR5649	ITM	473517!
PR5650	ITM	484054
PR5654	ITM	415389
PR5656	ITM	417181!
PR5657	ITM	412119!
PR5658	ITM	416500
PR5659	ITM	410737!
PR5660	ITM	55469
PR5662	ITM	473274
PR5663	ITM	450090
PR5665	ITM	410694!
PR5669	ITM	417254
PR5670	ITM	417360
PR5672	ITM	416107!
PR5673	ITM	350974!
PR5674	ITM	417354!
PR5675	ITM	410496!
PR5676	ITM	456744N
PR5677	ITM	417532
PR5679	ITM	455858
PR5680	ITM	410987!
PR5681	ITM	417514
PR5682	ITM	415045!
PR5684	ITM	415349
PR5688	ITM	417597
PR5689	ITM	472258
PR5690	ITM	55646=
PR5697	ITM	411330!
PR5699	ITM	416239!
PR5700	ITM	357302
PR5700	ITM	415991
PR5702	ITM	450143
PR5707	ITM	473463
PR5708	ITM	417509
PR5709	ITM	417198
PR5710	ITM	415645!
PR5711	ITM	417362!
PR5712	ITM	416666
PR5714	ITM	416039
PR5716	ITM	455480!
PR5717	ITM	417562
PR5718	ITM	415854
PR5720	ITM	417205!
PR5722	ITM	416557
PR5723	ITM	417258
PR5724	ITM	417546!
PR5725	ITM	473415
PR5726	ITM	417499
PR5727	ITM	415867
PR5730	ITM	473239!
PR5733	ITM	415294!
PR5735	ITM	416229
PR5736	ITM	417487!
PR5736	ITM	417487
PR5784	ITM	473447
PR5795	ITM	471316
PR5797	ITM	472397!
PR5802	ITM	470088
PR5811	ITM	416738!
PR5816	ITM	415984!
PR5817	ITM	476470
PR6000	ITM	473231!
PR6001	ITM	413247!

! Industrial Size/Type
= The U.S. customer service number is 877-4-TIMKEN. The Canadian customer service numbers are 800-565-4927 (English) and 800-565-0438 (French-Canadian).

Mfr. No.	Name	Zero Duplication or Recommended Industrial
PR6002	ITM	476023N
PR6007	ITM	**473228**
PR6009	ITM	**472179**
PR6010	ITM	**473214**!
PR6011	ITM	323119
PR6012	ITM	**415303**!
PR6014	ITM	40071S
PR6017	ITM	**471554**!
PR6021	ITM	**415437**
PR6021	ITM	**415437**!
PR6024	ITM	**470605**!
PR6027	ITM	**417538**
PR6028	ITM	**417563**
PR6029	ITM	**471138**!
PR6030	ITM	**417357**
PR6032	ITM	**473425**
PR6035	ITM	**455019**!
PR6036	ITM	**417492**
PR6040	ITM	**471821**!
PR6042	ITM	311189
PR6043	ITM	331228H
PR6044	ITM	**473245**!
PR6046	ITM	**473447**
PR6050	ITM	450313
PR6051	ITM	**456105**
PR6052	ITM	**417316**!
PR6053	ITM	**415034**!
PR6055	ITM	7751H
PR6058	ITM	**417316**!
PR6059	ITM	**416738**!
PR6060	ITM	**480581**=
PR6061	ITM	**470682**
PR6062	ITM	**476842**
PR6066	ITM	**472572**!
PR6067	ITM	**416130**!
PR6068	ITM	**471787**!
PR6069	ITM	1091=
PR6071	ITM	8660S
PR6072	ITM	8611N
PR6077	ITM	8976S
PR6082	ITM	222510
PR6082	ITM	25X35X7!
PR6084	ITM	**473258**!
PR6085	ITM	1214
PR6085	ITM	1214N
PR6087	ITM	**417366**!
PR6089	ITM	**470898**!
PR6090	ITM	**415483**
PR6091	ITM	**473231**!
PR6092	ITM	**471539**!
PR6093	ITM	**471267**!
PR6094	ITM	**470088**
PR6096	ITM	8935S
PR6097	ITM	**412920**!
PR6098	ITM	456618
PR6099	ITM	6815
PR6101	ITM	41257!
PR6103	ITM	312518!
PR6103	ITM	342518
PR6105	ITM	**484058**
PR6106	ITM	5473
PR6107	ITM	**416921**!
PR6108	ITM	**417520**
PR6109	ITM	**473244**!
PR6110	ITM	6954S
PR6112	ITM	1174
PR6112	ITM	38X52X8.5!
PR6119	ITM	**472439**
PR6121	ITM	**413246**
PR6126	ITM	**350936**
PR6129	ITM	**416557**
PR6130	ITM	475568=
PR6134	ITM	**415327**
PR6135	ITM	**472560N**!
PR6138	ITM	**415263**
PR6139	ITM	40322=
PR6145	ITM	224045
PR6145	ITM	40X62X12!
PR6147	ITM	**471835**!
PR6148	ITM	**472150**
PR6152	ITM	5965
PR6154	ITM	8996S=
PR6156	ITM	**471267**!
PR6159	ITM	**417134**
PR6160	ITM	6638S
PR6162	ITM	**415958**
PR6170	ITM	**416891**!
PR6171	ITM	**417354**!
PR6172	ITM	**418028**
PR6173	ITM	**473214**!
PR6183	ITM	8835S
PR6186	ITM	**413248**
PR6187	ITM	40555
PR6187	ITM	40555S!
PR6189	ITM	42101S
PR6190	ITM	291295
PR6191	ITM	**473228**!
PR6192	ITM	**470334**!
PR6194	ITM	9569S
PR6199	ITM	1097N
PR6201	ITM	1184
PR6205	ITM	1994
PR6205	ITM	48X70X9!
PR6213	ITM	223542
PR6213	ITM	35X55X11!
PR6214	ITM	473823
PR6222	ITM	**417349**!
PR6223	ITM	**415995**!
PR6224	ITM	**415449**!
PR6225	ITM	**471272**!
PR6227	ITM	**474276**!
PR6230	ITM	**470774**!
PR6231	ITM	**470380**!
PR6231	ITM	472189A!
PR6232	ITM	9845
PR6234	ITM	**472258**!
PR6235	ITM	415983N!
PR6238	ITM	42260S
PR6240	ITM	**415036**
PR6249	ITM	1037
PR6250	ITM	493637
PR6252	ITM	415983N!
PR6254	ITM	**417159**
PR6256	ITM	**350364**
PR6258	ITM	350156
PR6258	ITM	**473096**
PR6261	ITM	**471264**!
PR6262	ITM	**471538**!
PR6263	ITM	**470954**!
PR6264	ITM	**471649**!
PR6265	ITM	**471192**
PR6266	ITM	**471192**
PR6267	ITM	**472164**!
PR6271	ITM	43290S
PR6272	ITM	**416273**
PR6273	ITM	**415302**
PR6274	ITM	**415960**
PR6276	ITM	**415303**!
PR6277	ITM	**476470**
PR6279	ITM	456744N
PR6280	ITM	**417211**!
PR6281	ITM	**415035**
PR6282	ITM	**415295**
PR6283	ITM	**415196**!
PR6284	ITM	**416153**!
PR6285	ITM	**416167**!
PR6286	ITM	**417040**
PR6287	ITM	**415124**
PR6288	ITM	**417022**
PR6289	ITM	455129
PR6290	ITM	7639S
PR6291	ITM	**415076**
PR6292	ITM	**417608**
PR6295	ITM	**473237**!
PR6304	ITM	**471831**!
PR6310	ITM	**470565**!
PR6311	ITM	**415458**
PR6313	ITM	**473442**!
PR6315	ITM	**417549**!
PR6318	ITM	**473230**!
PR6320	ITM	**415437**
PR6322	ITM	**471651**
PR6324	ITM	**473228**!
PR6330	ITM	**471766**=
PR6331	ITM	5472=
PR6332	ITM	**473231**!
PR6337	ITM	**473228**!
PR6338	ITM	417498
PR6339	ITM	**472082**
PR6342	ITM	**3395**!
PR6342	ITM	352444
PR6344	ITM	**415449**!
PR6346	ITM	**415960**
PR6350	ITM	7782N
PR6352	ITM	**472258**!
PR6354	ITM	**471652**
PR6361	ITM	8792S
PR6363	ITM	**472409**!
PR6370	ITM	7457N
PR6371	ITM	**417247**!
PR6373	ITM	1174
PR6373	ITM	38X52X8.5!
PR6374	ITM	1181
PR6374	ITM	41X56X7!
PR6375	ITM	1183
PR6376	ITM	224045
PR6376	ITM	40X62X12!
PR6378	ITM	1992
PR6379	ITM	8121S
PR6389	ITM	370001A
PR6390	ITM	450260
PR6391	ITM	**471224**!
PR6392	ITM	**480630**!
PR6395	ITM	**471854**!
PR6396	ITM	**471267**!
PR6399	ITM	6703S
PR6401	ITM	**473179**!
PR6409	ITM	**415303**!
PR6414	ITM	370037A
PR6415	ITM	370036A
PR6416	ITM	5092
PR6417	ITM	**417158**!
PR6422	ITM	**416888**!
PR6430	ITM	1196
PR6433	ITM	476574N
PR6438	ITM	**471831**!
PR6439	ITM	**417357**
PR6444	ITM	350909
PR6444	ITM	**471224**!
PR6445	ITM	**417343**!
PR6449	ITM	410989
PR6449	ITM	470989
PR6455	ITM	**472258**!
PR6462	ITM	226020
PR6462	ITM	60X80X8!
PR6467	ITM	7044NA
PR6468	ITM	340835
PR6471	ITM	1170
PR6472	ITM	32X58X8!
PR6487	ITM	**417350**=
PR6492	ITM	1190
PR6501	ITM	331173
PR6502	ITM	**1213N**
PR6505	ITM	228020
PR6510	ITM	3051N
PR6511	ITM	223240
PR6511	ITM	32X48X8!
PR6513	ITM	7013S
PR6524	ITM	482126
PR6525	ITM	2551
PR6531	ITM	2503
PR6531	ITM	2503N
PR6532	ITM	331227H
PR6533	ITM	51322
PR6534	ITM	1173
PR6536	ITM	224820
PR6536	ITM	48X62X8!
PR6539	ITM	7751H
PR6553	ITM	**472193**!
PR6557	ITM	**472258**!
PR6558	ITM	**471766**!
PR6565	ITM	476574N
PR6569	ITM	**471765**!
PR6571	ITM	226020
PR6571	ITM	60X80X8!
PR6573	ITM	**416892**!
PR6575	ITM	**415379**
PR6576	ITM	**473444**!
PR6577	ITM	**416071**
PR6578	ITM	**472397**!
PR6586	ITM	2443
PR6590	ITM	**416153**!
PR6592	ITM	**252277**
PR6594	ITM	417536
PR6595	ITM	**1213N**
PR6610	ITM	**417316**!
PR6612	ITM	8695S
PR6614	ITM	**471424**!
PR6615	ITM	**472012**
PR6620	ITM	**416383**
PR6623	ITM	1953
PR6623	ITM	42X60X7!
PR6625	ITM	376590A
PR6627	ITM	**416394**
PR6629	ITM	416102
PR6630	ITM	**415960**
PR6631	ITM	**416500**
PR6632	ITM	**417484**!
PR6634	ITM	**412119**!
PR6637	ITM	**418028**
PR6640	ITM	1174
PR6640	ITM	38X52X8.5!
PR6644	ITM	**416271**!
PR6647	ITM	2443
PR6666	ITM	**471984**
PR6673	ITM	343104
PR7003	ITM	**415001**!
PR7004	ITM	200322
PR7006	ITM	**415077**
PR7008	ITM	**417606**
PR7014	ITM	**415072**
PR7016	ITM	**416921**!
PR7037	ITM	450557
PR7037	ITM	**471255**!
PR8004	ITM	12X30X7
PR8012	ITM	14X28X6
PR8015	ITM	14X35X7
PR8017	ITM	15X30X7

! Industrial Size/Type
= The U.S. customer service number is 877-4-TIMKEN. The Canadian customer service numbers are 800-565-4927 (English) and 800-565-0438 (French-Canadian).

Mfr. No.	Name	Zero Duplication or Recommended Industrial
PR8018	ITM	15X32X8
PR8019	ITM	15X35X7
PR8024	ITM	16X30X7
PR8026	ITM	16X35X7
PR8031	ITM	17X30X7
PR8032	ITM	17X32X7
PR8037	ITM	17X40X7
PR8042	ITM	18X32X8
PR8047	ITM	18X40X7
PR8050	ITM	221925
PR8058	ITM	20X35X7!
PR8062	ITM	20X40X7!
PR8062	ITM	222050
PR8066	ITM	20X47X7
PR8069	ITM	20X52X7
PR8077	ITM	22X40X7
PR8081	ITM	22X47X7
PR8086	ITM	24X40X7!
PR8090	ITM	24X47X7
PR8094	ITM	222540
PR8098	ITM	25X47X7
PR8101	ITM	25X52X7!
PR8112	ITM	26X47X7
PR8113	ITM	222655
PR8113	ITM	26X48X7!
PR8117	ITM	222745
PR8117	ITM	27X45X8!
PR8126	ITM	222860
PR8126	ITM	28X47X7!
PR8129	ITM	28X52X7
PR8130	ITM	223014
PR8132	ITM	30X47X7
PR8135	ITM	223035
PR8141	ITM	30X62X7
PR8146	ITM	32X45X7
PR8147	ITM	223235
PR8147	ITM	32X46X6!
PR8149	ITM	223240
PR8149	ITM	32X48X8!
PR8151	ITM	223255
PR8151	ITM	32X52X7!
PR8152	ITM	2008
PR8154	ITM	223275
PR8154	ITM	32X56X10!
PR8159	ITM	223430
PR8159	ITM	710417
PR8167	ITM	35X50X8!
PR8167	ITM	3771
PR8168	ITM	223535
PR8170	ITM	223542
PR8170	ITM	35X55X11!
PR8171	ITM	223543!
PR8171	ITM	35X56X10!
PR8174	ITM	35X62X7!
PR8176	ITM	223580
PR8182	ITM	223605
PR8182	ITM	36X50X7!
PR8184	ITM	223610
PR8184	ITM	710197!
PR8185	ITM	2003N!
PR8190	ITM	710057
PR8191	ITM	223620
PR8194	ITM	1174
PR8194	ITM	38X52X8.5!
PR8196	ITM	223830
PR8196	ITM	38X55X7!
PR8198	ITM	223840
PR8198	ITM	38X58X8!
PR8200	ITM	38X62X7
PR8201	ITM	1176
PR8208	ITM	**1213N**
PR8209	ITM	224020
PR8209	ITM	40X55X8!
PR8210	ITM	224025
PR8212	ITM	224040
PR8212	ITM	40X60X10!
PR8213	ITM	224045
PR8213	ITM	40X62X12!
PR8218	ITM	712011
PR8225	ITM	494117
PR8227	ITM	1953
PR8227	ITM	42X60X7!
PR8228	ITM	224252
PR8228	ITM	42X62X8!
PR8229	ITM	224255
PR8229	ITM	42X65X10!
PR8232	ITM	224270
PR8232	ITM	42X72X10!
PR8238	ITM	224462
PR8238	ITM	44X62X8!
PR8242	ITM	224270
PR8242	ITM	42X72X10!
PR8243	ITM	224520
PR8243	ITM	45X60X10!
PR8245	ITM	1992
PR8246	ITM	224560
PR8246	ITM	45X68X7!
PR8248	ITM	224570
PR8248	ITM	45X72X12!
PR8262	ITM	1187
PR8262	ITM	47X68X10!
PR8264	ITM	224772
PR8265	ITM	224820
PR8265	ITM	48X62X8!
PR8266	ITM	1973
PR8266	ITM	48X65X10!
PR8267	ITM	224835
PR8267	ITM	48X68X10!
PR8268	ITM	1994
PR8268	ITM	48X70X9!
PR8269	ITM	48X72X7!
PR8277	ITM	225010
PR8277	ITM	50X65X8!
PR8278	ITM	225020
PR8278	ITM	50X68X8!
PR8279	ITM	1960
PR8280	ITM	50X72X8
PR8283	ITM	50X80X8
PR8284	ITM	225082
PR8288	ITM	1884
PR8288	ITM	52X68X8!
PR8290	ITM	225230
PR8290	ITM	52X72X8!
PR8297	ITM	55X72X8!
PR8300	ITM	55X80X8
PR8301	ITM	55X82X12!
PR8302	ITM	55X85X10
PR8315	ITM	225875
PR8315	ITM	58X75X11!
PR8317	ITM	58X80X8
PR8322	ITM	60X75X8
PR8324	ITM	226020
PR8324	ITM	60X80X8!
PR8325	ITM	2001
PR8325	ITM	60X82X12!
PR8326	ITM	60X85X8
PR8336	ITM	226285
PR8336	ITM	62X85X8!
PR8338	ITM	62X90X10
PR8349	ITM	65X85X10
PR8351	ITM	65X90X10!
PR8353	ITM	65X100X10
PR8360	ITM	68X90X10
PR8362	ITM	68X100X13
PR8364	ITM	227020
PR8364	ITM	70X88X8!
PR8365	ITM	227040
PR8365	ITM	70X90X10!
PR8366	ITM	70X95X13
PR8367	ITM	70X100X13
PR8372	ITM	72X95X10
PR8373	ITM	72X100X12
PR8377	ITM	75X95X10
PR8378	ITM	227550
PR8378	ITM	75X100X12!
PR8383	ITM	78X100X10
PR8387	ITM	228010
PR8388	ITM	228020
PR8388	ITM	80X105X13!
PR8389	ITM	80X110X12
PR8397	ITM	85X110X12
PR8399	ITM	85X120X12
PR8405	ITM	229005
PR8405	ITM	229006
PR8413	ITM	95X120X12
PR8415	ITM	229520
PR8415	ITM	95X130X12!
PR8416	ITM	100X120X12
PR8417	ITM	100X125X12
PR8418	ITM	100X130X12!
PR8424	ITM	105X130X12
PR8426	ITM	105X140X12
PR8428	ITM	110X130X12
PR8430	ITM	110X140X13!
PR8430	ITM	231108
PR8439	ITM	115X140X12
PR8441	ITM	115X150X12
PR8444	ITM	120X140X13!
PR8444	ITM	717004
PR8445	ITM	120X145X12!
PR8445	ITM	231204
PR8446	ITM	120X150X12
PR8448	ITM	120X160X12
PR8449	ITM	125X150X12!
PR8449	ITM	231250
PR8451	ITM	125X160X12
PR8455	ITM	130X160X12
PR8456	ITM	130X170X15
PR8541	ITM	457294
PR8542	ITM	**415991**
PR8542	ITM	**415991**!
PR8544	ITM	**417349**!
PR8592	ITM	125X150X12!
PR8592	ITM	231250
PR8594	ITM	231404
PR8605	ITM	220X250X15
PR8657	ITM	**471870**!
PR8658	ITM	**472492**!
PR8659	ITM	**472924**!
PR8660	ITM	**472397**!
PR8661	ITM	**473242**
PR8662	ITM	**412027**
PR8663	ITM	**410102**
PR8665	ITM	487945
PR8667	ITM	55524
PR8669	ITM	**473473**
PR8670	ITM	**471138**!
PR8671	ITM	**472636**!
PR8672	ITM	**412920**!
PR8674	ITM	**415234**!
PR8675	ITM	**415259**!
PR8676	ITM	55337
PR8677	ITM	**472029**
PR8678	ITM	**470605**!
PR8679	ITM	**415449**!
PR8680	ITM	**416273**
PR8681	ITM	**455079**!
PR8682	ITM	**415082**
PR8683	ITM	**455655**!
PR8684	ITM	355732
PR8686	ITM	**416664**!
PR8687	ITM	**415984**!
PR8688	ITM	**417316**!
PR8690	ITM	**416706**!
PR8691	ITM	476281
PR8692	ITM	**416282**
PR8694	ITM	**417350**!
PR8695	ITM	**453182**
PR8696	ITM	415036N
PR8697	ITM	**415088**
PR8699	ITM	**455019**!
PR8700	ITM	**416404**!
PR8701	ITM	**416288**!
PR8702	ITM	**416024**
PR8703	ITM	**417433**!
PR8704	ITM	**476470**
PR8705	ITM	**456305**
PR8706	ITM	**415023**
PR8707	ITM	**415437**
PR8708	ITM	**415027**
PR8709	ITM	**417495**
PR8710	ITM	**415559**
PR8711	ITM	**415035**
PR8712	ITM	**417356**!
PR8713	ITM	**417357**
PR8714	ITM	**416130**!
PR8715	ITM	**415041**
PR8717	ITM	**415196**!
PR8718	ITM	**416891**!
PR8719	ITM	**415045**!
PR8720	ITM	**416137**
PR8721	ITM	**415058**
PR8722	ITM	**327303**!
PR8723	ITM	**417530**
PR8724	ITM	**416892**!
PR8725	ITM	**416154**!
PR8726	ITM	**415351**!
PR8728	ITM	**415725**!
PR8729	ITM	**416865**!
PR8758	ITM	50X72X8
PR8761	ITM	50X80X8
PR8767	ITM	55X72X8!
PR8770	ITM	55X80X8
PR8771	ITM	55X82X12!
PR8772	ITM	55X85X10
PR8778	ITM	226020
PR8778	ITM	60X80X8!
PR8780	ITM	60X85X8
PR8789	ITM	65X85X10
PR8791	ITM	65X90X10!
PR8793	ITM	65X100X10
PR8798	ITM	227020
PR8798	ITM	70X88X8!
PR8799	ITM	227045
PR8800	ITM	70X95X13
PR8801	ITM	70X100X13
PR8805	ITM	75X95X10
PR8806	ITM	227550
PR8806	ITM	75X100X12!
PR8810	ITM	228020
PR8810	ITM	80X105X13!
PR8811	ITM	80X110X12
PR8819	ITM	90X120X12
PR8824	ITM	100X120X12
PR8825	ITM	100X125X12
PR8826	ITM	100X130X12!
PR8830	ITM	110X140X13!
PR8830	ITM	231108

! Industrial Size/Type

ALPHABETICAL INTERCHANGE

Mfr. No.	Name	Zero Duplication or Recommended Industrial
PR8834	*ITM*	115X140X12
PR8840	*ITM*	125X160X12
PR9003	*ITM*	223035
PR9004	*ITM*	35X62X7!
PR9005	*ITM*	224020
PR9005	*ITM*	40X55X8!
PR9006	*ITM*	224025
PR9008	*ITM*	224040
PR9008	*ITM*	40X60X10!
PR9009	*ITM*	224045
PR9009	*ITM*	40X62X12!
PR9021	*ITM*	224520
PR9021	*ITM*	45X60X10!
PR9022	*ITM*	1012
PR9022	*ITM*	1012N
PR9022	*ITM*	45X62X8!
PR9023	*ITM*	1992
PR9023	*ITM*	45X65X8!
PR9024	*ITM*	224560
PR9024	*ITM*	45X68X7!
PR9026	*ITM*	224570
PR9026	*ITM*	45X72X12!
PR9032	*ITM*	225010
PR9032	*ITM*	50X65X8!
PR9033	*ITM*	225020
PR9033	*ITM*	50X68X8!
PR9034	*ITM*	1960
PR9035	*ITM*	50X72X8
PR9038	*ITM*	50X80X8
PR9043	*ITM*	**473227**!
PR9044	*ITM*	**470625**!
PR9045	*ITM*	**470380**!
PR9045	*ITM*	472189A!
PR9046	*ITM*	**473228**!
PR9047	*ITM*	**451857**
PR9048	*ITM*	**473440**!
PR9049	*ITM*	**450523**
PR9050	*ITM*	**471958**
PR9052	*ITM*	**471424**!
PR9053	*ITM*	**471870**!
PR9054	*ITM*	**472492**!
PR9055	*ITM*	**472924**!
PR9056	*ITM*	**470530**!
PR9057	*ITM*	**473242**
PR9058	*ITM*	**412027**
PR9059	*ITM*	**410102**
PR9061	*ITM*	487945
PR9063	*ITM*	55524
PS105	*OLIVE*	**471692**!
PS212	*MASSE*	**471835**!
PS22123	*C-P*	**471472**!
PS2216	*C-P*	**472492**!
PS25310	*C-P*	**474281**!
PS25311	*C-P*	**470530**!
PS25312	*C-P*	**472157**!
PS25312	*C-P*	**472157**
PS25313	*C-P*	**472636**!
PS25314	*C-P*	**474281**!
PS2532	*C-P*	**415041**
PS2534	*C-P*	**471271**!
PS2535	*C-P*	**415995**!
PS2536	*C-P*	**471554**!
PS2537	*C-P*	**471570**!
PS2538	*C-P*	**330385**!
PS2539	*C-P*	**450593**!
PS462	*C-P*	**415072**
PS4621	*C-P*	**471554**!
PS46211	*C-P*	**471466**!
PS46212	*C-P*	**480630**!
PS46213	*C-P*	**416865**!
PS46214	*C-P*	**415072**
PS46215	*C-P*	**471538**!
PS4622	*C-P*	**471570**!
PS4623	*C-P*	**450593**!
PS4624	*C-P*	**416239**!
PS4625	*C-P*	**471766**!
PS4626	*C-P*	**471255**!
PS4628	*C-P*	**415035**
PS4628	*C-P*	**415035**!
PS4629	*C-P*	**471413**!
PSF24671	*B-L-H*	**473313**
PSF24672	*B-L-H*	**470530**!
PSI50851	*WABCO*	240009
PT7523	*JOHND*	**471760**
PT7524	*JOHND*	**471643**!
PTA122	*F-R-H*	**481864**
PTS913	*AT SU*	**473215**!
PX6060742	*CATER*	**415284**
PXS47	*COC*	**470898**!
PXS89	*COC*	240356
PY623	*GRAY*	**471553**!
Q00688033	*GMC*	J1113
Q27958	*JOHND*	**415988**
Q27958K	*JOHND*	**415988**
Q28735	*JOHND*	**471870**!
QM1333	*DEVIL*	**470712**!
QR631	*BUC-E*	**471570**!
QS100	*DEVIL*	**451583**!
QS141	*DEVIL*	**471526**!
QS186	*DEVIL*	**471442**!
QS187	*DEVIL*	**471472**!
QX22260	*JOHND*	240319
QX34751B	*JOHND*	**472636**!
QX38201	*JOHND*	**418028**
QX38201	*JOHND*	455137!
QX52280	*JOHND*	**413246**
QX52281	*JOHND*	**473466**
QX52282	*JOHND*	**471760**
QX62779	*JOHND*	**474274**
QX72410	*JOHND*	**473229**!
R-100495-VAR	*SPG*	4810V
R-100495-VAR	*SPG*	714810
R-4810-VA1	*SPG*	4810V!
R-84114	*JOHND*	J1396
R100263VAR	*SPG*	100263
R100263VAR	*SPG*	4562V
R100494VAR	*SPG*	100494
R100494VAR	*SPG*	**476470**
R100495VAR335	*SPG*	100495
R100557VAR	*SPG*	100557
R100557VAR	*SPG*	4544V
R100731VA8	*SPG*	100731V
R1069	*ROL*	25598
R1075824	*WILSO*	**415128**
R10778	*GAL*	455024
R10779	*GAL*	**416339**
R10779	*GAL*	455031!
R1080	*WILSO*	**417602**!
R11076	*GAL*	470059
R11076	*GAL*	**470380**!
R11077	*GAL*	**470088**
R1138R	*JOHND*	425RR
R11560	*GAL*	**416476**!
R115916	*WILSO*	**417606**
R1251016	*WILSO*	**415227**!
R13881	*CASE*	**470898**
R14090	*GAL*	**417269**!
R14132	*GAL*	**472012**
R14133	*GAL*	**415449**!
R14134	*GAL*	**417356**!
R14134	*GAL*	455188
R14189	*GAL*	**417538**
R14190	*GAL*	**415938**
R15028	*WILSO*	**471570**!
R16287	*CASE*	470059
R16287	*CASE*	**470380**!
R18438	*GAL*	**415072**
R18462	*GAL*	**472179**
R1960	*ROCKE*	2900
R1961	*ROCKE*	2900
R19970	*GAL*	**411376**!
R19974	*GAL*	**415379**
R19974	*GAL*	**415379**!
R19987	*GAL*	**417247**!
R1X817	*CATER*	455944=
R2001	*WILSO*	**471760**
R20080	*BTM*	**470334**!
R20798	*CASE*	**417621**!
R20869	*BTM*	**473229**
R20894	*BTM*	**471466**!
R20965	*BTM*	5778
R21017	*BTM*	**471413**
R21050	*BTM*	40576S
R21164	*BTM*	40566S
R21263	*BTM*	**472311**!
R21466	*CASE*	**417349**=
R21483	*CASE*	**472636**=
R22209	*GAL*	**415001**!
R22518	*WILSO*	450165
R22518	*WILSO*	**471801**!
R23024	*B-L-H*	**55301S**
R23437	*CONTI*	**471868**
R24226	*GAL*	**416654**!
R24752	*US-EL*	**415498**
R250116	*WILSO*	**473228**
R262124	*WILSO*	**472185**!
R27347	*GAL*	**473405**
R3002	*WILSO*	**472397**!
R3024	*B-L-H*	**55301S**
R304	*IRON*	**471354**!
R30HH102	*DANA*	**416865**!
R31324	*WILSO*	**472016**
R31440	*JOHND*	**412473**!
R319124	*WILSO*	**470088**
R323324VG	*SPG*	3476V
R32349	*CASE*	**417601**
R33214	*GAL*	**471354**!
R33338	*JOHND*	**473227**!
R33338R	*JOHND*	**473227**!
R33339R	*JOHND*	**473227**!
R33340	*JOHND*	**416404**!
R335212	*WILSO*	**412119**!
R33528	*WILSO*	**411253**!
R33543	*GAL*	**415007**
R33578R	*JOHND*	**471866**=
R33587R	*JOHND*	240007=
R34650	*JOHND*	**471413**!
R354216	*WILSO*	**415001**!
R35735	*JOHND*	**416332**!
R35735R	*JOHND*	**416332**!
R35738	*JOHND*	240356
R35738R	*JOHND*	340356
R35798R	*JOHND*	**470380**!
R362220	*WILSO*	**415458**!
R36423	*JOHND*	**476470**
R37410	*JOHND*	**417343**!
R37410R	*JOHND*	**417343**!
R375224	*WILSO*	**417316**!
R4003	*WILSO*	**415995**!
R4253	*WILSO*	**417487**
R42532	*WILSO*	455015
R42536	*WILSO*	**456105**
R42538	*WILSO*	**476470**
R434	*FULLE*	**455134**!
R4373	*WILSO*	**417488**!
R44176	*JOHND*	JV1378=
R44508	*FORD*	**471354**!
R44508	*WOODB*	**471354**!
R450316	*WILSO*	**415991**
R450316	*WILSO*	455146!
R45406	*JOHND*	J1126
R462	*FULLE*	**416654**!
R481386VAR	*SPG*	481386V
R5003	*WILSO*	**455019**!
R500316	*WILSO*	**415027**!
R500316	*WILSO*	**415027**
R50032	*WILSO*	**415021**
R500324	*WILSO*	**416339**
R500324	*WILSO*	455031!
R500330	*WILSO*	**415034**!
R50036	*WILSO*	455022
R50038	*WILSO*	**415023**
R5004	*WILSO*	**415035**!
R5004	*WILSO*	**415035**
R5504	*WILSO*	**415036**
R550412	*WILSO*	**415196**!
R550416	*WILSO*	**416888**!
R55048	*WILSO*	**416891**!
R575416	*WILSO*	**416892**!
R575424	*WILSO*	**415138**!
R600L-204	*CONTI*	**417344**!
R600L-293	*CONTI*	**471466**!
R600S-247	*CONTI*	**330385**!
R625416	*WILSO*	**415351**!
R625430	*WILSO*	**417273**
R6542Z	*WITTE*	**416921**!
R675516	*WILSO*	**416107**!
R675516	*WILSO*	455073
R68201	*JOHND*	JV1140=
R70453	*JOHND*	JV1132=
R74485	*JOHND*	JX1141
R746D	*JOHND*	**471737**
R75056	*JOHND*	712251
R7506	*WILSO*	**415072**
R769DN	*JOHND*	**471766**
R78048TA	*SPG*	78048
R7X6048	*CATER*	485725H=
R800616	*WILSO*	**416229**
R8592	*LETN*	**472179**
R86374	*WILSO*	**416077**
R8643	*LETN*	450269
R88597	*JOHND*	J1121
R888712	*WILSO*	**455117**
R901716	*WILSO*	**415551**
R945001	*ROCKW*	100494
R945002	*ROCKW*	100495
R945003	*ROCKW*	100263
R945004	*ROCKW*	100557
RA14755	*PETTI*	40555
RA14755	*PETTI*	40555S!
RA1500	*AUTDP*	BS40380
RA1505	*AUTDP*	BS40509
RA1507	*AUTDP*	BS40380
RA1511	*AUTDP*	BS40509
RA17424	*PETTI*	42352S
RA17455	*PETTI*	40555
RA17455	*PETTI*	40555S!
RA2277310	*TW-DI*	**476470**
RA2277310	*TW-DI*	**476470**!
RA47115	*JOHND*	JX1967
RC07004	*FUNK*	**471192**
RC446	*GRAY*	**417191**
RC446	*GRAY*	456585
RCF7168	*MASSE*	427RR
RCF7206	*FUNK*	340724!
RCF7228	*MASSE*	421
RCO7004	*FUNK*	**471192**
RCP71164	*FUNK*	450375!

! Industrial Size/Type

= The U.S. customer service number is 877-4-TIMKEN. The Canadian customer service numbers are 800-565-4927 (English) and 800-565-0438 (French-Canadian).

Mfr. No.	Name	Zero Duplication or Recommended Industrial
RCP71164	FUNK	6936S!
RCP71164	FUNK	9845
RCS312	STDRL	82012
RCS405A	STDRL	82016
RCS508	STDRL	82005
RCS509	STDRL	82027
RCS510	STDRL	82003
RCS511	STDRL	82011
RCS512	STDRL	82015
RCS706A	STDRL	82022
RCS802	STDRL	82017
RCS804	STDRL	82024
RD2000	WMG	CQ2000=
RD325	NATL	RD311
RD33266	GAL	**474281**!
RD41543	GAL	**473232**
RD41544	GAL	**471341**!
RD46540	GAL	**416706**!
RD49164	GAL	**417604**
RD49243	GAL	**455356**
RD50	UNIVE	**472636**!
RD51	UNIVE	**473211**!
RD52688	GAL	**415449**!
RD52761	GAL	**418028**
RD52761	GAL	455137!
RD53870	AMC	351487
RD54429	AMC	**473367**
RD54429	AMC	**473367**!
RD55363	GAL	**415150**!
RD55426	GAL	**416288**!
RD56	UNIVE	**471762**!
RE-13181	JOHND	**417344**!
RE-14439	JOHND	3173
RE11036	JOHND	39952
RE13310	JOHND	39956
RE1537	FUNK	**416154**!
RE158082+100558VDR	SPG	100558
RE158897	JOHND	**412119**
RE17352	JOHND	39954
RE22764	JOHND	39954
RE24959	JOHND	39952
RE35885	GMC	39952
RE53687	JOHND	997101
RE54073	JOHND	997100
RES3905	CONTI	**415025**
RF10513	GUY	**410987**!
RF10513	GUY	450686
RF10624	GUY	**415449**!
RF10676	GUY	**415035**
RF14519	GUY	**473214**
RF15232	GUY	**417492**
RF16207	GUY	**417247**!
RF16292	GUY	**416135**!
RF17920	GUY	**473179**!
RF18517	GUY	**415995**!
RF18800	GUY	**470898**
RF193	IRON	**473238**
RF19620	GUY	**417349**
RF20382	GUY	**471689**!
RF20691	GUY	**471820**
RF20795	GUY	**415995**!
RF20882	GUY	**415458**!
RF23395	GUY	**472439**
RF24187	GUY	**471766**!
RF2523	GUY	**471316**
RF2913	GUY	**472012**
RF2921	GUY	**473214**
RF2922	GUY	**472015**!
RF2925	GUY	**472164**!
RF2932	GUY	**415991**
RF2932	GUY	455146!
RF2956	GUY	**415995**!
RF3702	GUY	**471760**
RF3932	GUY	**415991**
RF3932	GUY	455146!
RF4018	GUY	**473440**!
RF5409	GUY	**471466**!
RF5410	GUY	**471442**!
RF5613	GUY	**416664**!
RF5800	GUY	**471272**!
RF5801	GUY	**471271**!
RF5866	GUY	**471272**!
RF8619	GUY	**472164**!
RF8628	GUY	**470898**
RF8660	GUY	**473179**!
RF8945	GUY	**472150**
RH1500	ROCK	82003
RH1501	ROCK	82005
RH1505	ROCK	82011
RH1507	ROCK	82001
RL6491	HART	**471554**!
RLE8360	CASE	**473231**
RM14610	HEIL	**417538**
RM14611	HEIL	**416229**
RM14612	HEIL	**473010**!
RM14613	HEIL	**471442**!
RM14614	HEIL	**472560N**!
RM14619	HEIL	**412119**!
RM14620	HEIL	**416476**!
RM14621	HEIL	455197N
RM14622	HEIL	**471766**!
RM14624	HEIL	**415088**
RM14624	HEIL	**415088**!
RM14627	HEIL	**471554**!
RM1463	HEIL	**416271**!
RM14631	HEIL	**471442**!
RM14632	HEIL	**416345**!
RM14632	HEIL	455033
RM14633	HEIL	**416865**!
RM1464	HEIL	**416107**!
RM1464	HEIL	455073
RM14642	HEIL	**473462**
RM1466	HEIL	**415072**
RM14671	HEIL	**415001**!
RM1468	HEIL	**417357**
RM1468	HEIL	455192!
RM1469	HEIL	**471231**!
RM14692	HEIL	**472636**!
RM146A15	HEIL	**470774**!
RM146A173	HEIL	**473467**
RM146A189	HEIL	**471466**!
RM146A194	HEIL	**417316**!
RM146A2	HEIL	**416888**!
RM146A202	HEIL	**415076**
RM146A29	HEIL	**417562**
RM146A34	HEIL	**473234**
RM146A344	HEIL	**416891**!
RM146A346	HEIL	**470625**!
RM146A390	HEIL	**471554**
RM146A8	HEIL	**417357**
RM146A8	HEIL	455192!
RM146A92	HEIL	**472636**!
RM1612	MUSKE	BS40620
RM523	MUSKE	BS40380
RM552	MUSKE	BS40110
RM553	MUSKE	BS40110
RM557	MUSKE	BS40396
RM611	MUSKE	BS15868
RM663	MUSKE	BS1280
RM688	MUSKE	BS5155
RO-21	ATP	223830
RO-21	ATP	223831
RO-27	ATP	223540
RO-28	ATP	223830
RO-29	ATP	1175
RO-4	ATP	223520!
RO1	ATP	**473445**
RO2358	MASSE	**471733**
RO2364	MASSE	**474276**!
RO5109A	MASSE	**416107**!
RO5109A	MASSE	455073
RO5118	MASSE	**412943**
RO5118A	MASSE	**412943**
RO5119A	MASSE	**472439**
RO5121A	MASSE	**417554**!
RO5188A	MASSE	**412943**
RO5519A	MASSE	**472439**
ROLL2X	LK-BT	**471689**!
ROOO83041	FWD	**471646**!
RP5087	ITM	**473229**!
RQ00366	READY	**473473**
RQ88222	READY	**471763**
RQ88302	READY	**473473**
RQ92993	READY	**471763**
RS001	EGDYN	82003
RS002	EGDYN	82011
RS003	EGDYN	82001
RS004	EGDYN	82005
RS006	EGDYN	82016
RS012	EGDYN	BS25035
RS014	EGDYN	82017
RS015	EGDYN	82022
RS016	EGDYN	82024
RS019	EGDYN	82001
RS028	EGDYN	82015
RS030	EGDYN	82012
RS29025	ROLRL	82003
RS29030	ROLRL	82005
RS29040	ROLRL	82016
RS29070	ROLRL	82017
RS29075	ROLRL	82024
RS29085	ROL	BS40110
RS29085	ROLRL	82012
RS29095	ROLRL	82022
RS29130	ROLRL	82015
RS29140	ROL	BS15868
RS29140	ROLRL	82011
RS29145	ROLRL	82027
RS29185	ROL	BS16144
RS29200	ROL	BS27493
RS29250	ROL	BS40265
RS29260	ROL	BS40387
RS29265	ROL	BS40268
RS29270	ROL	BS40381
RS29275	ROL	BS40380
RS29275	ROLRL	82001
RS29295	ROL	BS5048
RS29360	ROLRL	82016
RS29365	ROL	BS40252
RS29450	ROL	BS40396
RS29480	ROL	BS40592
RS29480	ROLRL	82021
RS29490	ROL	16267
RS29550	ROL	BS40620
RS29630	ROL	BS40535
RS29640	ROL	BS40667
RS29690	ROL	BS40578
RS7004	BESTV	BS40380
RS7006	BESTV	BS15868
RS7007	BESTV	BS40110
RT100S27	SHOV	**415284**
RT1027	MASSE	**415284**
RT153	MINNM	**473213**!
RT3718	BL-KN	**472179**
RT3719	BL-KN	**416738**!
RT3719	BL-KN	450096
RT450B	TRANG	**473215**!
RT502A	TRANG	**472409**!
RT513547	TRANG	**415498**
RT514D	TRANG	**472636**!
RT525B	TRANG	**472157**!
RT525B	TRANG	**472157**
RT5317	BL-KN	**470530**!
RT5756	BU-SP	**471192**
RT6000A-51	BL-KN	**472179**
RT6000A-52	BL-KN	**473460**
RT6076	BL-KN	**472179**
RT6223	BL-KN	**473215**!
RT6224	BL-KN	**473236**!
RT7330	BL-KN	**413247**!
RT7412	BL-KN	**470530**!
RT7413	BL-KN	**472179**
RT908	MINNM	**473225**!
RTB3920	GACO	**470088**
RTL366	FAIRB	**473228**
RW507	FED	**353120**
RW507D850	GMC	5458$
RW507E850	GMC	5458$
RW509	FED	6957=
RW509850	GMC	5589$
RW607	FED	6971S=
RW707	GMC	5573$
RW707	HYST	5573$
RX1582	OLIVE	**471766**!
RX1583	OLIVE	**471424**!
RX19279	GMC	**471554**!
RX44183	JOHND	**415142**
RX44565	JOHND	**415995**!
RX45715	JOHND	**472157**
RX45715	JOHND	**472157**!
RX45933	JOHND	**471554**!
RX45951	JOHND	**471554**!
RZL12	AM CA	**480630**!
S-0283343	IH	**417967**!
S00506	GR-RP	**470380**!
S02047	CARDX	**417191**
S02047	CARDX	455165!
S100	EIMCO	240731
S101	EIMCO	**471224**!
S102	EIMCO	340724!
S1042KH	Y-T	5119
S1050	EIMCO	**471442**!
S106	EL-MO	**471231**!
S1072	C-W	**416476**!
S1072	WOOL	**416476**!
S107211035	WOOL	**416476**!
S1077	EIMCO	**470954**!
S1089	EIMCO	**471795**
S109	EIMCO	**471651**
S110	EIMCO	**476838**!
S110	MACK	**323138**!
S1101	EIMCO	**473228**!
S111	EIMCO	**471652**
S1140	EIMCO	**473239**!
S115	EIMCO	**473427**
S1160	EIMCO	**473242**
S1180	LETN	**417562**
S119	EIMCO	**474281**!
S1200	EIMCO	**473243**
S121	EIMCO	**473205**
S123	GRAY	**473438**
S124	EIMCO	**471413**!
S125	EIMCO	**471766**!
S1251	EIMCO	**410752**
S126	EL-MO	**471950**
S1275	EIMCO	**416664**!
S128	EIMCO	**471808**!
S128	EL-MO	J1127

! Industrial Size/Type $ F-M Number Is Part Of A Kit
= The U.S. customer service number is 877-4-TIMKEN. The Canadian customer service numbers are 800-565-4927 (English) and 800-565-0438 (French-Canadian).

Mfr. No.	Name	Zero Duplication or Recommended Industrial
S129	EIMCO	474254!
S129	EL-MO	473233!
S130	EIMCO	450341
S1301	EIMCO	415995!
S131	EIMCO	473423
S1311	EIMCO	416404!
S1313	EIMCO	417621!
S1314	EIMCO	416288
S133	EIMCO	417621!
S134	MACK	472636!
S1350	EIMCO	415437
S137	EIMCO	472258!
S137	EL-MO	J1111
S1386	EIMCO	417211!
S139	EIMCO	473215!
S140	EIMCO	473446
S140	EL-MO	473445
S14048	KELSE	6064
S141	EIMCO	473197
S142	EIMCO	413469!
S142	EL-MO	473228!
S143	EIMCO	473016!
S145	EIMCO	473226
S146	EIMCO	450621
S147	EIMCO	473439!
S148	EIMCO	474276
S150	EIMCO	473227
S15088	NOVO	450129
S15088	NOVO	472826!
S15089	NOVO	415995!
S151	EIMCO	470059
S151	EIMCO	470380!
S15171	LETN	473367!
S15171	LETN	473367
S153	EIMCO	240319
S154	EIMCO	473458!
S15415	C-P	471354!
S15485	NOVO	473016!
S155	EIMCO	450326
S1550	EIMCO	416107!
S156	EIMCO	416892!
S15804485A000	EMRSN	471549!
S160	EIMCO	473229
S161	EIMCO	415294!
S16100	CUMMI	471224!
S16101	CUMMI	471766!
S16103	CUMMI	471192
S16106	CUMMI	471103!
S16106	FMC	415138!
S16106	TRANG	415138!
S16108	CUMMI	476838!
S16109	CUMMI	417621
S16110	CUMMI	472924!
S16111	CUMMI	471649!
S16113	CUMMI	473458!
S16114	CUMMI	416654!
S16115	CUMMI	470059
S16115	CUMMI	470380!
S16116	CUMMI	472409
S16118	CUMMI	472636!
S16119	CUMMI	473464
S16119	CUMMI	473464!
S16120	CUMMI	470059
S16120	CUMMI	470380!
S16121	CUMMI	470950!
S16121	CUMMI	6241S
S16122	CUMMI	471744!
S16123	CUMMI	470712!
S16124	CUMMI	411253!
S16125	CUMMI	473232
S16126	CUMMI	473214!
S16127	CUMMI	473228
S16128	CUMMI	471829
S16129	CUMMI	471820
S16130	CUMMI	415458!
S16132	FMC	470898!
S16134	CUMMI	330385
S16135	CUMMI	472287!
S16136	CUMMI	450129
S16136	CUMMI	472826!
S16138	CUMMI	471570!
S16140	CUMMI	471765!
S16141	CUMMI	471354!
S16142	CUMMI	472409
S16143	CUMMI	415449!
S16147	CUMMI	472185!
S16148	CUMMI	417316!
S16149	CUMMI	473010!
S16150	CUMMI	330385
S16151	FMC	415449!
S16152	CUMMI	417501
S16153	CUMMI	473016!
S16154	CUMMI	471785!
S16155	CUMMI	472705!
S16157	CUMMI	330385
S16158	CUMMI	471529
S16159	CUMMI	55155=
S16161	CUMMI	471571
S1617	GR-RP	471267!
S162	EIMCO	473367
S162	EIMCO	473367!
S16216	WABCO	415027*
S163	EIMCO	473228
S1631	FMC	471192
S164	EIMCO	352541
S1642	GR-RP	471808!
S165	EIMCO	450275
S167	EIMCO	473232
S1699	GR-RP	481163!
S1700	GR-RP	472397!
S1715	LETN	450273
S176	EIMCO	472164!
S1765	WOOL	415047
S177	EIMCO	471141!
S178	EIMCO	473448
S179	EIMCO	42352S
S1796	CUMMI	473367!
S1800	CUMMI	470530!
S1805F162	CUMMI	417487!
S1805F162	CUMMI	417487
S181	EIMCO	473450
S184	EIMCO	473451!
S185	EIMCO	473239
S1855	CUMMI	415060
S1855	CUMMI	455060
S186	EIMCO	473240!
S187	EIMCO	410524
S188	EIMCO	473238
S189	LETN	415025
S190	LETN	455406!
S1918	CUMMI	471466!
S197	EIMCO	50528
S199	EIMCO	352541
S200	EIMCO	472492!
S2002	CUMMI	473215!
S2013	LUF	471766!
S202	EIMCO	472924!
S2021	LUF	472185!
S2025	LUF	471870!
S2027B	LUF	471341!
S2032	LUF	416654!
S2035	LUF	476470!
S2035	LUF	476470
S2049	CUMMI	470334!
S2049A	LUF	417541
S205	EIMCO	473242
S2057	IG-RA	470712!
S206	EIMCO	410102
S2065	TRANG	415138!
S207	EIMCO	416738!
S207	EIMCO	450096
S208	EIMCO	470898!
S213	EIMCO	472015!
S214	EIMCO	472016
S2140	EIMCO	471466!
S215	EIMCO	413469!
S2166	MIXMO	473367!
S2166	MIXMO	473367
S217	EIMCO	55087=
S2177	EIMCO	472185!
S218	EIMCO	472234
S219	EIMCO	472018
S220	EIMCO	473245!
S2202	EIMCO	472924!
S2204	GMC	471413!
S2213	EIMCO	472015!
S2225	EIMCO	411376!
S223	EIMCO	471341!
S225	EIMCO	472636!
S228	EIMCO	415234!
S2293	EIMCO	416654
S2298	LETN	455026
S2299	LETN	417269!
S2300	EIMCO	415995!
S2383	LETN	416167!
S2384	LETN	417171!
S2385	LETN	457874
S2386	LETN	417539!
S2388	EIMCO	415034!
S244	CONST	471887
S250	EIMCO	411245!
S2500	EIMCO	415725!
S253	EIMCO	471271!
S254	EIMCO	415001!
S255	EIMCO	40555
S255	EIMCO	40555S!
S2580	MIXMO	473446
S2601	EIMCO	471554!
S2601	LETN	471192
S2603	LETN	417512
S2604	EIMCO	473215!
S2604	LETN	412943
S2610	EIMCO	471224!
S2611	EIMCO	471413
S2615	MIXMO	473467
S2616	EIMCO	6309=
S2617	MIXMO	472572!
S2621	EIMCO	472636!
S2625	EIMCO	240736
S263	CONST	416239!
S263	EIMCO	415483!
S265	CONST	473444
S265	EIMCO	417082
S2655	EIMCO	415447
S2660	MIXMO	471763
S2677	MIXMO	450177
S268	EIMCO	455151
S2684D	JOHND	473179!
S2786	MIXMO	474274
S279	EIMCO	415303!
S280	EIMCO	417316!
S281	EIMCO	417484!
S2819	MIXMO	481163!
S2828	MIXMO	470328
S2828	MIXMO	481213!
S284	EIMCO	475384
S2852	MIXMO	472164!
S287	EIMCO	417344!
S288	EIMCO	455310
S289	EIMCO	416921!
S290	EIMCO	455144
S2901	MIXMO	352541
S293	EIMCO	416654!
S300	EIMCO	417350!
S301	EIMCO	415995!
S3013G	REPUB	471267!
S3014G	REPUB	472560N!
S3015G	REPUB	471413!
S3016G	REPUB	471466!
S3017G	REPUB	472560N
S3019	MIXMO	471271!
S302	EIMCO	417351!
S3023G	REPUB	471267!
S3024C	REPUB	474278
S3024C	REPUB	6859S
S3026F	REPUB	470954
S3027C	REPUB	7188S
S3029C	REPUB	470954
S3031C	REPUB	471538
S3036C	REPUB	474278
S3036C	REPUB	6859S
S3039G	REPUB	7013S
S304	EIMCO	417487
S3041G	REPUB	8059S
S306	EIMCO	55548
S310	CONST	472185!
S312	EIMCO	416404!
S313	EIMCO	417621!
S314	EIMCO	416288!
S315	EIMCO	55386
S319	EIMCO	417490
S3208	MIXMO	416345!
S3208	MIXMO	455033
S3216	MIXMO	415041
S3246	MIXMO	417546!
S325	EIMCO	476470
S3254	MIXMO	455079!
S3276	MIXMO	416282
S328	EIMCO	415023
S329	EIMCO	415023
S336	EIMCO	415442!
S336	EIMCO	55442
S338	EIMCO	417191
S338	EIMCO	455165!
S339	EIMCO	455249!
S340	ELGIN	223340
S350	EIMCO	415437
S360	EIMCO	415991
S360	EIMCO	455146!
S3621	CARDX	417191
S3621	CARDX	455165!
S363	EIMCO	415937!
S3637	EIMCO	J1355=
S366	EIMCO	415379
S366	EIMCO	415379!
S3665	EIMCO	J1117
S3679	MIXMO	473367!
S3679	MIXMO	473367
S3680	MIXMO	415437
S380	EIMCO	415958
S380	EIMCO	415958!
S381-26-157	VILA	710150
S390	EIMCO	415034!
S400	CLOYE	223400
S400	ELGIN	223400
S401	EIMCO	417356!
S401	EIMCO	455188
S410	ELGIN	223410

! Industrial Size/Type * Minor Width Difference

= The U.S. customer service number is 877-4-TIMKEN. The Canadian customer service numbers are 800-565-4927 (English) and 800-565-0438 (French-Canadian).

Mfr. No.	Name	Zero Duplication or Recommended Industrial
S410	*ELGIN*	710416
S412	*EIMCO*	**415043**
S413	*EIMCO*	**417512**
S4135	*CARDX*	**411253**!
S414	*EIMCO*	455203
S415	*EIMCO*	**415295**
S420T	*ELGIN*	223420
S425	*EIMCO*	**472157**!
S425	*EIMCO*	**472157**
S4250	*CARDX*	**415007**
S430	*EIMCO*	455197N
S4326	*SPG*	342805
S452	*EIMCO*	**416154**!
S455	*EIMCO*	**416892**!
S4553	*LETN*	**415437**
S4553	*LETN*	**415437**!
S465154	*MIXMO*	**410308**!
S480785	*MIXMO*	5751
S4809112	*MIXMO*	**455336**
S480946	*MIXMO*	5921
S490	*EIMCO*	**417273**
S501	*EIMCO*	**417278**
S502	*EIMCO*	**417541**
S51	*EIMCO*	**471442**!
S5265	*EIMCO*	**417082**
S538	*EIMCO*	**455576**!
S5452	*EIMCO*	**416154**!
S560	*EIMCO*	**415447**
S600	*EIMCO*	**415072**
S6050	*WHITE*	**415449**!
S6051	*WHITE*	**417344**!
S6053	*ROCKW*	**476838**!
S6053	*WHITE*	**476838**!
S6054	*WHITE*	**471554**!
S6056	*WHITE*	**473367**
S6056	*WHITE*	**473367**!
S6101	*WHITE*	**472572**!
S6102	*WHITE*	**412943**
S6103	*WHITE*	**473467**!
S6104	*WHITE*	**416339**
S6104	*WHITE*	455031!
S6105	*WHITE*	**472636**!
S6106	*WHITE*	**412943**
S6108	*WHITE*	**473228**
S6109	*WHITE*	**411253**!
S6110	*WHITE*	**450593**!
S6112	*WHITE*	**472179**
S6119	*CUMMI*	**415995**!
S6207	*WHITE*	**411245**!
S6208	*WHITE*	**415449**!
S6209	*WHITE*	**415302**
S6212	*WHITE*	**417316**!
S6214	*WHITE*	**417158**!
S6249	*LETN*	**417509**
S62491	*LETN*	**417509**
S625	*EIMCO*	**417562**
S630	*EIMCO*	**415294**!
S6302	*WHITE*	**417171**!
S6305	*WHITE*	**415960**
S6312	*WHITE*	**417181**!
S6314	*WHITE*	**415138**!
S63323	*C-P*	240356
S63324	*C-P*	**473466**
S64	*EIMCO*	**471466**!
S65038	*CASE*	**417344**!
S65046	*C-P*	**471750**!
S6616	*LETN*	**472144**!
S72	*EIMCO*	50026
S7214	*WHITE*	**417158**!
S7215	*WHITE*	**415960**!
S7243	*LETN*	**472439**
S7306	*WHITE*	**415023**
S760423	*MIXMO*	240151
S76619	*C-P*	40504S=
S79567	*C-P*	40370S
S80	*EIMCO*	**470954**
S8337	*JOHND*	**450765**!
S84143	*C-P*	**472560N**
S843	*LETN*	**473245**!
S844F-6701-AA	*FORD*	712100
S85318	*C-P*	**472311**!
S85513	*GMC*	**416888**!
S86830	*C-P*	**471267**!
S86832	*C-P*	**416404**!
S86B1535	*GREEN*	240731
S86B428	*GREEN*	240736
S87	*EIMCO*	**471570**!
S88	*EIMCO*	**471267**!
S89	*EIMCO*	**470590**
S8900	*LETN*	**417158**!
S93	*EIMCO*	50419
S96168	*CASE*	**416888**!
S9694	*LETN*	**471579**
S9697	*LETN*	**415711**
S971	*LETN*	**415351**!
S977	*MACK*	**450400**
S99	*EIMCO*	450457
S9900	*MASSE*	**473461**!
S9901	*MASSE*	50528
S9904	*LILIS*	**473236**!
S9904	*MASSE*	**473236**!
S9905	*MASSE*	**473214**
S9906	*MASSE*	**450474**
S9907	*MASSE*	**472258**
S9908	*MASSE*	**410987**=
S9910	*CONTI*	**473423**
S9910	*MASSE*	**473423**
S9911	*MASSE*	**470954**!
S9912	*MASSE*	**471829**
S9922	*MASSE*	**471835**!
S9925	*MASSE*	**471760**
S9931	*MASSE*	**413247**!
S9932	*MASSE*	**472924**!
S9936	*MASSE*	**480630**!
S9937	*MASSE*	**471224**!
S9940	*MASSE*	**418028**
S9940	*MASSE*	455137!
S9942	*MASSE*	**470774**!
S9943	*MASSE*	**415150**!
S9948	*MASSE*	**470712**!
S9949	*MASSE*	**473010**!
SA10028	*CLARK*	**417354**!
SA10177	*CLARK*	**417344**!
SA10279	*CLARK*	**415991**
SA10279	*CLARK*	455146!
SA10570	*CLARK*	**415263**
SA10612	*CLARK*	**472492**!
SA10792	*CLARK*	**470898**
SA10951	*CLARK*	**481163**!
SA11361	*CLARK*	**415995**!
SA12158	*CLARK*	6886S
SA12419	*CLARK*	**471316**
SA12495	*CLARK*	**417556**
SA13011	*CLARK*	**416125**!
SA13104	*CLARK*	**470565**!
SA13222	*CLARK*	**455117**
SA13223	*CLARK*	**415683**
SA13332	*CLARK*	**415035**
SA13332	*CLARK*	**415035**!
SA13437	*CLARK*	**415379**!
SA13437	*CLARK*	**415379**
SA13514	*CLARK*	**415995**!
SA13587	*CLARK*	6547
SA14931	*CLARK*	**417541**
SA15511	*CLARK*	**472150**
SA15872	*CLARK*	470950!
SA15872	*CLARK*	6241S
SA16434	*CLARK*	450073
SA16899	*CLARK*	**416154**!
SA17087	*CLARK*	**472492**!
SA17393	*CLARK*	240731
SA17781	*CLARK*	351028
SA17918	*CLARK*	**413248**
SA179543	*BENDI*	**471267**!
SA18965	*CLARK*	370021A
SA19653	*CLARK*	**416070**
SA20407	*CLARK*	6663S
SA30050	*CLARK*	**471538**!
SA30119	*CLARK*	350156
SA30119	*CLARK*	**473096**
SA30614	*CLARK*	5865
SA31026	*CLARK*	416422
SA31030	*CLARK*	**415371**
SA31076	*CLARK*	**415076**
SA31305	*CLARK*	**417344**!
SA31409	*CLARK*	**472636**!
SA31568	*CLARK*	415146!
SA31568	*CLARK*	**415991**
SA31670	*CLARK*	204017
SA31713	*CLARK*	**471341**!
SA33616	*CLARK*	**417344**!
SA33990	*CLARK*	**473228**
SA34395	*CLARK*	J1125
SA34776	*CLARK*	**470605**!
SA35449	*CLARK*	**417247**!
SA35454	*CLARK*	**415001**!
SA40627	*CLARK*	**417269**
SA45107	*CLARK*	**473237**!
SA45120	*CLARK*	**470565**!
SA48949	*CLARK*	**415035**
SA48950	*CLARK*	417385V=
SA48951	*CLARK*	415172V=
SA48955	*CLARK*	416362V=
SA4996	*CLARK*	**416921**!
SA5043	*CLARK*	**472185**!
SA5195	*CLARK*	**417507**
SA5195	*CLARK*	**417507**!
SA5208	*CLARK*	**415036**
SA5889	*CLARK*	**471504**!
SA64601	*EATON*	712625
SA6725	*CLARK*	**417210**!
SA7465	*CLARK*	**417488**!
SA7753	*CLARK*	**472924**!
SA7794	*CLARK*	**471264**!
SA8814	*CLARK*	**418028**
SA8856	*CLARK*	45031S
SA9177	*CLARK*	**471763**
SA9962	*CLARK*	**415991**
SA9962	*CLARK*	455146!
SB-938151	*AMGEN*	8430S
SB-994258	*AMGEN*	**473228**
SB-994261	*AMGEN*	9912
SB-998092	*AMGEN*	5778
SB103	*GARCI*	BS5155
SB106	*GARCI*	BS5974
SB207	*COFAP*	6936S
SB279	*GARCI*	BS5048
SB901241178	*JOY*	**412473**!
SBG41M91723	*CINMI*	**471442**!
SC1508	*LETN*	**411348**!
SC160	*EMSCO*	**417181**!
SC2504	*LETN*	**416339**
SC2504	*LETN*	455031!
SC2978	*LETN*	**416921**!
SC4613	*LETN*	**415995**!
SC525	*LETN*	**472185**!
SC5478	*LETN*	**411376**!
SC5485	*LETN*	**417344**!
SC5531	*LETN*	**470530**!
SC555	*FMC*	**455396**
SC7611	*LETN*	**416654**!
SC8133	*LETN*	**417191**
SC8133	*LETN*	456585
SC8674	*LETN*	**417485**
SC8675	*LETN*	**455032**!
SC8965	*LETN*	**416154**!
SD1-10005176	*SELAS*	3698
SD1014	*CONTI*	JV1136
SD113X2	*FAWIC*	**415045**!
SD113X3	*FAWIC*	**415036**
SD113X4	*FAWIC*	**472144**!
SD113X5	*FAWIC*	**415437**
SD113X5	*FAWIC*	**415437**!
SD113X6	*FAWIC*	**455406**!
SD1827	*STDFG*	6663S
SD2289	*LETN*	**416892**!
SD2516	*LETN*	455310
SD3008	*LETN*	**416107**!
SD3008	*LETN*	455073
SD5430	*LETN*	**415991**
SD5430	*LETN*	**415991**!
SD553487	*SELAS*	8610
SD5885	*LETN*	**413469**!
SD6612	*LETN*	**417491**
SD8181	*GMC*	**470898**
SD970	*HU-WR*	**471554**!
SD9705	*LETN*	**417598**
SE-10	*CTD*	203025
SE-11	*CTD*	203013
SE-12	*CTD*	204017
SE-13	*CTD*	204038
SE-13X	*CTD*	40183S
SE-15	*CTD*	204027
SE-16	*CTD*	204506
SE-16	*CTD*	**415082**
SE-16	*CTD*	446631*=
SE-19	*CTD*	204005
SE-21	*CTD*	**412027**
SE-22	*CTD*	**470460**=
SE-23	*CTD*	204035
SE-24	*CTD*	43073S
SE-25	*CTD*	204508*
SE-26	*CTD*	**412920***
SE-29	*CTD*	43670*
SE-30	*CTD*	**455253***
SE-31	*CTD*	55337
SE-33	*CTD*	5071
SE-34	*CTD*	40286
SE-35	*CTD*	**455079**
SE-36	*CTD*	**455655**
SE-37	*CTD*	42421S*
SE-38	*CTD*	204506*
SE-40	*CTD*	41013S
SE-41	*CTD*	204506
SE-42	*CTD*	45013S*
SE-43	*CTD*	204020
SE-43	*CTD*	204505*
SE-44	*CTD*	204508
SE-45	*CTD*	204078=
SE-47	*CTD*	**410102**
SE-48	*CTD*	**415088**
SE-54	*CTD*	**416149**
SE-56	*CTD*	**471747**
SE-57	*CTD*	204506*
SE-58	*CTD*	46997S
SE-59	*CTD*	**412725**
SE-61	*CTD*	**254270**
SE-62	*CTD*	**470460***=

! Industrial Size/Type * Minor Width Difference

= The U.S. customer service number is 877-4-TIMKEN. The Canadian customer service numbers are 800-565-4927 (English) and 800-565-0438 (French-Canadian).

Mfr. No.	Name	Zero Duplication or Recommended Industrial
SE-63	*CTD*	**473473***
SE-64	*CTD*	204013
SE-65	*CTD*	204020
SE1000008	*AM BO*	**350364**
SE1015	*AM BO*	**471765**
SE3013	*AM BO*	350156
SE3013	*AM BO*	**473096**
SF1707	*LETN*	**417520**
SF1707	*WABCO*	**417520**
SF17073	*LETN*	**417520**
SF1708	*LETN*	**415645!**
SF1708	*LETN*	455104
SF1723	*LETN*	**417247!**
SF1724	*LETN*	**416476!**
SF17241	*LETN*	**416476!**
SF4150	*LETN*	450124=
SF4150	*WABCO*	450124=
SF41501	*LETN*	450124=
SF4210	*LETN*	**415437**
SF4210	*LETN*	**415437!**
SF5344	*LETN*	**415284**
SF5345	*LETN*	**416345!**
SF5345	*LETN*	455033
SF53456	*WABCO*	**416345!**
SF53456	*WABCO*	455033
SF5346	*LETN*	**417205!**
SF5347	*LETN*	**476470**
SF53471	*LETN*	**476470**
SF5348	*LETN*	**416229**
SF53481	*LETN*	**416229**
SG1Q	*ATP*	342805
SG2031	*LETN*	**415437**
SG2031	*LETN*	**415437!**
SG2034	*LETN*	**415142**
SG2036	*LETN*	**472492!**
SG2039	*LETN*	**455134!**
SG21A	*ATP*	8792S
SG4302	*LETN*	**455336**
SG4349	*LETN*	**415138!**
SG43492	*LETN*	**415138!**
SG43496	*WABCO*	**415138!**
SG7	*CALSO*	**410524**
SG7067	*LETN*	7208S
SG7612	*LETN*	**415937!**
SG8717	*LETN*	**417298**
SGL68X95X13	*GACO*	226840
SGR42609A	*NOK*	2025
SK10045	*CLARK*	**417316!**
SK10088	*CLARK*	345035
SK10332	*CLARK*	**473405**
SK12336	*CLARK*	**416706!**
SK12413	*CLARK*	**474254!**
SK1283	*HYST*	**417181!**
SK13081	*CLARK*	**471835!**
SK13082	*CLARK*	**472164!**
SK13505	*CLARK*	**416404!**
SK14164	*CLARK*	**417316!**
SK15028	*CLARK*	**415449!**
SK16892	*CLARK*	**413247!**
SK17271	*SPICE*	40769S
SK1767	*CLARK*	**472258!**
SK1829	*CHRYS*	7412S
SK20257	*CLARK*	**473245!**
SK20883	*CLARK*	**473245!**
SK2187	*GMC*	**415284**
SK25899	*CLARK*	**471276**
SK25906	*CLARK*	**472164!**
SK25910	*CLARK*	**473197**
SK25911	*CLARK*	**471466!**
SK27234	*SPICE*	**472572!**
SK27319	*CLARK*	**415349=**
SK28389	*CLARK*	**471267!**
SK31097	*CLARK*	**471281!**
SK31284	*CLARK*	**472572!**
SK35895	*CLARK*	**417433=**
SK3880	*CHRYS*	**471271!**
SK4328	*CLARK*	**472287!**
SK4412	*CLARK*	**474254!**
SK4514	*CLARK*	**473010!**
SK4572	*CLARK*	**471744!**
SK4739	*CLARK*	**415995!**
SK4769	*CLARK*	**415991**
SK4769	*CLARK*	455146!
SK4834	*CLARK*	470328
SK4834	*CLARK*	**481213!**
SK51537	*SPICE*	**450400**
SK5223	*CLARK*	**412943**
SK5264	*CLARK*	240731
SK5329	*CLARK*	**415458!**
SK5338	*CLARK*	**473447**
SK5409	*CLARK*	**415001!**
SK5426	*CLARK*	**416332!**
SK55566	*GMC*	**417316!**
SK6244	*CLARK*	**473179!**
SK6303	*CLARK*	**470565!**
SK6474	*CLARK*	**470334!**
SK65795	*GMC*	**416664!**
SK6739	*CLARK*	**471192**
SK700723	*GMC*	**415035**
SK7084	*CLARK*	**416404!**
SK7695	*CLARK*	**415449!**
SK793	*SCHWI*	J1115
SK800723	*GMC*	416147
SK8286	*CLARK*	**472636!**
SK8596	*CLARK*	**415263**
SK8739	*CLARK*	**415379**
SK8739	*CLARK*	**415379!**
SK8890	*CLARK*	**470954!**
SK8893	*CLARK*	**471442!**
SKA1601134	*SPICE*	**471950**
SKA1618982	*SPICE*	2043
SKA16333	*SPICE*	5778
SKA165229	*SPICE*	**482253**
SKA165547	*SPICE*	240736
SKA167989	*SPICE*	450503=
SKA168814	*SPICE*	**472258!**
SKA169120	*SPICE*	40061S=
SKA24751	*SPICE*	**472234**
SKA24807	*SPICE*	**473448**
SKA43746	*SPICE*	**472179**
SKA43747	*SPICE*	40183S!
SKA44871	*SPICE*	**474274**
SKA46857	*SPICE*	40059S
SKA65289	*SPICE*	**471835!**
SKA65765	*SPICE*	6808N
SKA69076	*SPICE*	**471192**
SKA69835	*SPICE*	450159
SKA70152	*SPICE*	450808
SKB37478	*SPICE*	417267
SKB41934	*SPICE*	**416345!**
SKB41934	*SPICE*	455033
SKB49361	*SPICE*	5976S
SKB49363	*SPICE*	**416229**
SKG49524	*SPICE*	**416158**
SKG53896	*SPICE*	**417343!**
SKH47752	*SPICE*	45637S
SKH52164	*SPICE*	**417621!**
SKH53119	*SPICE*	**418029!**
SKH53422	*SPICE*	**471549!**
SKH54128	*SPICE*	**418029!**
SKL1667355	*GE*	**473445**
SKN1800047	*SPICE*	**471504!**
SKN1800048	*SPICE*	**416865!**
SKS351106	*HYST*	417537
SKS52245	*HYST*	5705*=
SKT1301854	*SPICE*	**473235!**
SKT22273	*GMC*	**418028**
SKT22273	*GMC*	455137!
SKT22273	*SPICE*	**418028**
SKT22273	*SPICE*	455137!
SKT22419	*SPICE*	**472015!**
SKT22844	*SPICE*	**416167!**
SKT23217	*SPICE*	**473228**
SKT24088	*SPICE*	**415995!**
SKT24089	*SPICE*	**417484!**
SKT24095	*SPICE*	**471570!**
SKT25231	*SPICE*	**415035**
SKT25231	*SPICE*	**415035!**
SKT25601	*GMC*	**417344!**
SKT25601	*SPICE*	**417344!**
SKT26824	*SPICE*	**471554!**
SKT27711	*SPICE*	**412119!**
SKT27720	*SPICE*	**482253**
SKT27824	*SPICE*	5976S
SKT27971	*SPICE*	**415988**
SKT27978	*SPICE*	**412119!**
SKT29097	*SPICE*	**471553!**
SKT30561	*SPICE*	**473235!**
SKT31377	*SPICE*	**472397!**
SKT31380	*SPICE*	**471821!**
SKT37866	*SPICE*	**472705!**
SKT41977	*SPICE*	**416339**
SKT41977	*SPICE*	455031!
SKT42821	*SPICE*	**416888!**
SKT42913	*SPICE*	**455019!**
SKT43885	*SPICE*	**473238**
SKT44550	*SPICE*	**415379**
SKT44550	*SPICE*	**415379!**
SKT44966	*SPICE*	**473238**
SKT44976	*SPICE*	**471705!**
SKT45107	*SPICE*	**472179**
SKT48669	*SPICE*	417267
SKT50913	*SPICE*	**471272!**
SKT51818	*SPICE*	**473231**
SKT71069	*SPICE*	350909
SKT71069	*SPICE*	**471224!**
SKT71076	*SPICE*	**471765!**
SKT71447	*SPICE*	**470954!**
SKT72405	*SPICE*	**417621!**
SKT72993	*SPICE*	**470898**
SKT75966	*SPICE*	**330385!**
SKT84544	*SPICE*	415146!
SKT84544	*SPICE*	**415991**
SKT84582	*SPICE*	**470898**
SKT85537	*SPICE*	**471466!**
SKT87304	*SPICE*	**473243**
SKTM56763	*SPICE*	**416404!**
SKTM56764	*SPICE*	**481073**
SKTM56786	*SPICE*	**417533**
SKTM56798	*SPICE*	455197N
SKW140233	*SPICE*	**416288!**
SKW140577	*SPICE*	**472164!**
SKW140799	*SPICE*	**471344**
SKW141443	*SPICE*	**473204**
SL10405	*FORD*	**416404!**
SL11171	*FORD*	**472705!**
SL6050	*LETN*	**417602!**
SL6051	*LETN*	**417602!**
SL9351	*CATER*	**472287!**
SM0454	*NATEN*	**417539!**
SM1636	*NATEN*	417543
SM7101	*MC-NO*	**471344**
SM93	*PETTI*	**473010!**
SM95	*PETTI*	**415483!**
SMA220	*VIC*	**471413=**
SMA262	*SPICE*	**476470=**
SN4388	*GMC*	415137!
SN4388	*GMC*	**418028**
SN4415	*GMC*	**417316!**
SN6653	*GMC*	5406
SN6933	*GMC*	**470898**
SN6955	*GMC*	353141!
SN9693	*GMC*	**472394**
SO1	*ATP*	7442H
SO2	*ATP*	342805
SP-35702	*SHOV*	**415437**
SP-35702	*SHOV*	**415437!**
SP010371	*LUF*	**472164!**
SP010732	*LUF*	**411376!**
SP010745	*LUF*	**417247!**
SP010746	*LUF*	**415072**
SP010747	*LUF*	**417606**
SP010749	*LUF*	410059
SP010749	*LUF*	**470380!**
SP010775	*LUF*	**417349!**
SP010776	*LUF*	**415991**
SP010776	*LUF*	455146!
SP010777	*LUF*	**472157!**
SP010777	*LUF*	**472157**
SP010778	*LUF*	**416865!**
SP010779	*LUF*	**415867**
SP010780	*LUF*	**417606**
SP010792	*LUF*	**415995!**
SP010794	*LUF*	**415027!**
SP010794	*LUF*	**415027**
SP010812	*LUF*	**418028**
SP010812	*LUF*	455137!
SP10	*SHOV*	**471138!**
SP120572	*SHOV*	**415138!**
SP22512	*SHOV*	**415187**
SP2367	*LETN*	**455134**
SP24391	*LETN*	255833=
SP24392	*LETN*	255833=
SP35542	*SHOV*	**417254**
SP35543	*SHOV*	**415991**
SP35543	*SHOV*	455146!
SP505	*SHOV*	**471138!**
SP6516	*STEEL*	**471554!**
SP6517	*STEEL*	450398
SP6517	*STEEL*	**471267!**
SP67127S	*MESC*	1994
SP67127S	*MESC*	48X70X9!
SP75906	*LUF*	**476470**
SP76127	*LUF*	**473243**
SP76371	*LUF*	**473228**
SP76700	*LUF*	**416888!**
SPR1434	*HU-WR*	**417223**
SS-64234	*VIC*	370008A
SS-68003	*VIC*	386025A
SS-68003	*VIC*	**416158**
SS-68004	*VIC*	370005A
SS-68005	*VIC*	370107A
SS-68006	*VIC*	370003A
SS-68007	*VIC*	370037A
SS-68007	*VIC*	370338A
SS46057	*VIC*	5589
SS460571	*VIC*	5589
SS46098	*VIC*	5200
SS46140	*VIC*	5201
SS46257	*VIC*	5204
SS46264	*VIC*	5320=
SS46328	*VIC*	5200
SS46328SF	*VIC*	5200
SS46369	*VIC*	**471801!**
SS46489	*VIC*	**471272**
SS46753	*VIC*	6649
SS46829	*VIC*	370027A
SS46841	*VIC*	370065A

! Industrial Size/Type * Minor Width Difference

= The U.S. customer service number is 877-4-TIMKEN. The Canadian customer service numbers are 800-565-4927 (English) and 800-565-0438 (French-Canadian).

Mfr. No.	Name	Zero Duplication or Recommended Industrial
SS46841-1	VIC	370026A
SS46841-3	VIC	370020A
SS468414	VIC	370065A
SS46842	VIC	370036A
SS46842	VIC	370349A
SS46842-1	VIC	370036A
SS46842-1	VIC	370349A
SS46842-1	VIC	380036A
SS46842-4	VIC	370036A >
SS46842-4	VIC	370349A %
SS46845	VIC	370036A
SS46845	VIC	370349A
SS46847	VIC	370037A >
SS46847	VIC	370338A %
SS46848	VIC	370107A
SS46848-1	VIC	370036A
SS46848-1	VIC	370349A
SS46849	VIC	370027A
SS47095	VIC	J1119+417344 !
SS47275	VIC	5499 =
SS47275	VIC	5573
SS472751	VIC	5573
SS47361	VIC	5202
SS47362	VIC	5203
SS47407	VIC	5666
SS47515	VIC	5397
SS47535	VIC	5599 * =
SS47537	VIC	5629
SS47592	VIC	PSK-1
SS47650	VIC	**476470** !
SS47777	VIC	5487
SS47778	VIC	5473
SS477781	VIC	5481
SS47781	VIC	5473
SS47786	VIC	5494
SS47789	VIC	5460
SS47795	VIC	**417506**
SS47795	VIC	5563
SS47795-1	VIC	**417505**
SS47866	VIC	5624
SS47869	VIC	370019A
SS47870	VIC	5460
SS47877	VIC	370046A
SS47878	VIC	370069A
SS47878	VIC	380069A
SS47880SF	VIC	370047A
SS47880SF	VIC	5649
SS47882	VIC	**417360**
SS47883	VIC	370033A
SS47885	VIC	**418028**
SS47887	VIC	370012A
SS47889	VIC	370019A
SS47890	VIC	370005A
SS47891	VIC	370021A
SS47983	VIC	370150A
SS48005	VIC	**415035**
SS48048	VIC	**416154** !
SS48173	VIC	**417365**
SS49212	VIC	**470354**
SS49251	VIC	**470354**
SS49521	VIC	**470354**
SS49521-1	VIC	**470354**
SS49742	VIC	5458
SS49745	VIC	**416271** !
SS49745	VIC	5066
SS49788	VIC	5797
SS49857	VIC	6077
SS49905	VIC	6465
SS49908	VIC	6465
SS49927	VIC	6245S =
SS49929	VIC	5408
SS499291	VIC	5408
SS49932	VIC	5401
SS49933	VIC	5403
SS49934	VIC	5405
SS49950	VIC	5406
SS49955	VIC	5410
SS49969	VIC	5452
SS49970	VIC	5406
SS49998	VIC	5453
SS49999	VIC	6643S
SS61197	VIC	5065
SS62106	VIC	3492V
SS62106	VIC	5665
SS62700	VIC	5625
SS64225	VIC	370013A
SS64225-2	VIC	370002A
SS64227	VIC	370012A
SS64227-2	VIC	370002A
SS64227-3	VIC	370012A
SS64229	VIC	370002A
SS64231	VIC	370029A
SS64231-1	VIC	370011A
SS64234-3	VIC	370008A
SS64236	VIC	386025A
SS64236	VIC	**416158**
SS64238	VIC	370004A
SS64238-2	VIC	370121A
SS64238-3	VIC	370121A
SS64240-1	VIC	370192A
SS64240-2	VIC	370192A
SS642403	VIC	370057A
SS64410	VIC	370027A
SS64412	VIC	370002A
SS64412-1	VIC	370011A
SS64412-3	VIC	370002A
SS64414	VIC	370001A
SS64415	VIC	370124A
SS64415-1	VIC	370015A
SS64437	VIC	370057A
SS64437-2	VIC	370005A
SS64443	VIC	370030A
SS64456	VIC	370002A
SS64460	VIC	**417172**
SS64462	VIC	370015A
SS64464	VIC	370145A
SS64468	VIC	370007A
SS64471	VIC	**417172**
SS64482	VIC	**415958**
SS64487	VIC	**417134**
SS64491	VIC	370011A
SS64495	VIC	370033A
SS64502	VIC	**418028**
SS64511	VIC	370012A
SS64530	VIC	370001A
SS64534	VIC	370054A
SS64536	VIC	370023A
SS64538	VIC	370132A
SS64539	VIC	370131A
SS64539	VIC	455685
SS64541	VIC	370011A
SS64542	VIC	**416892**
SS64546	VIC	370006A
SS64550	VIC	**416888** !
SS64553	VIC	370019A
SS64558	VIC	370047A
SS64558	VIC	9584
SS64558-1	VIC	**415437**
SS64561	VIC	370046A
SS64564	VIC	370046A
SS64567	VIC	**415058**
SS64569	VIC	370069A
SS64569	VIC	380069A
SS64571	VIC	**416865**
SS64584	VIC	**417505**
SS64589	VIC	**417506**
SS64589	VIC	5089
SS64603	VIC	370003A
SS66734	VIC	1943
SS66740	VIC	224220
SS66740	VIC	42X56X7 !
SS66740	VIC	494117
SS66755	VIC	225110
SS66802	VIC	1175
SS66802	VIC	223840 *
SS66872	VIC	800451
SS6691	VIC	4899
SS66912	VIC	5695
SS66914	VIC	5696
SS66914	VIC	5700
SS66926	VIC	710097
SS67139	VIC	5700
SS68001	VIC	370036A
SS68001	VIC	370349A
SS68002	VIC	370065A
SS68008	VIC	386025A
SS68008	VIC	**416158**
ST1013	HOUGH	**472157**
ST1013	HOUGH	**472157** !
ST22518	CLARK	**470088**
ST331	VIC	16300
ST332	VIC	16301
ST333	VIC	16302
ST334	VIC	16303
ST339	VIC	16304
ST51258	CLARK	**455330** !
STD1473	AVCO	**471765** !
STD1484	AVCO	**473236** !
STD1568	AVCO	**472164** !
STD1569	AVCO	**473214** !
SU8854	LF-PT	471337
SV125	LETN	**417556**
SX13830	ALLCH	**412040**
SX13831	ALLCH	**470898** !
SX46673	JOHND	**411394** !
SX47271	JOHND	**415379**
SX47271	JOHND	**415379** !
T-351406	HYST	**471766** !
T-351417	HYST	**471271** !
T-371474	HYST	**471570** !
T-429735	HYST	**415027**
T-429735	HYST	**415027** !
T-77612081	HYST	**417350** !
T0247576	CHRYS	710196
T0695940	RENAU	716102
T0725410	RENAU	222556
T10055S	TROS	**473215** !
T10059S	TROS	410059
T10059S	TROS	**470380** !
T101	BUTBN	**471766** !
T10121S	TROS	**472409**
T10136S	TROS	**470625** !
T10160	TROS	**471763**
T10163S	TROS	**471766** !
T10171S	TROS	**473016** !
T10181	CASE	**411253** !
T1021	GERL	**472397** !
T10219	TROS	**471649** !
T10308	TROS	**410308** !
T10308S	TROS	**410308** !
T1033	GERL	**417509**
T10441S	TROS	**471341** !
T10482D	HARN	**415995** !
T10482P	HARN	**415995** !
T10482P	HARN	**415995** !
T10496S	TROS	**410496** !
T10567	TROS	**471267** !
T10660S	TROS	**471442** !
T10708S	TROS	**410708**
T10719S	TROS	**471984**
T10814S	TROS	**471344**
T11275S	TROS	**476470** !
T11275S	TROS	**476470**
T11501317	CHRYS	**417506**
T11656	COC	**473467** !
T11721	COC	5M403
T11835	COC	**471764** !
T11854	COC	**471766** !
T11879T	JOHND	420
T11936	COC	**472258**
T11943	COC	**473226**
T11961	COC	**415449** !
T12926	CASE	204008
T13305	COC	240414
T13306	COC	240414
T13306	WHITE	240414
T1349595	AMC	225020
T1349596	AMC	229005
T1349626	CHRYS	1172
T13501317	CHRYS	370023A
T140	GERL	**415991**
T140	GERL	455146 !
T140009	TROS	240009
T140009S	TROS	**471466**
T140364	TROS	**350364**
T140629	TROS	**481537**
T140771	TROS	340771
T145035	TROS	345035
T145637	TROS	45637S
T14720	CASE	200110
T15013S	TROS	**415995** !
T15095S	TROS	**416271** !
T15149	TROS	**417343** !
T15177S	TROS	**415379**
T15192S	TROS	415192N
T15281S	TROS	**417349**
T15379S	TROS	**415379**
T15899S	TROS	415899N
T15899S	TROS	**416624**
T15939	COC	**470954**
T16038Z	WITTE	**470625** !
T16377	HARN	**416888** !
T19580	JOHND	340835
T19761613	HYST	200861
T19761614	HYST	JV933
T19802	JOHND	**473474**
T19802T	JOHND	**473474**
T200	BUTBN	**471735**
T200117	HYST	311197
T20036	CASE	**453279** !
T20076S	TROS	**470334** !
T20081	CASE	204035
T20120	TROS	**471224** !
T20223	JOHND	343101
T202964	CUMMI	**471795**
T205006	TROS	203006 !
T205007	TROS	6489
T205008	TROS	205017
T205017	TROS	204017
T219	BUC-E	**416892** !
T220120	TROS	**471224** !
T220301	TROS	**472397** !
T22069	JOHND	**471192**
T22101	JOHND	240733
T22101T	JOHND	240733
T22198	JOHND	**472419**
T22260	JOHND	**471267** !
T225003	TROS	**415458** !

! Industrial Size/Type * Minor Width Difference > Hub Mount % Spindle Mount

= The U.S. customer service number is 877-4-TIMKEN. The Canadian customer service numbers are 800-565-4927 (English) and 800-565-0438 (French-Canadian).

Mfr. No.	Name	Zero Duplication or Recommended Industrial
T225086	TROS	417487!
T225086	TROS	417487
T225146	TROS	415146!
T225146	TROS	415991
T230737	TROS	410737!
T235070	TROS	416865!
T235086	TROS	417487
T235086	TROS	417487!
T235095	TROS	416271!
T235315	TROS	415984!
T235348	TROS	475348N
T235354	TROS	416404!
T235498	TROS	415498
T235949	TROS	416500
T23709	CASE	41461S
T23902	JOHND	471570!
T23902T	JOHND	471570!
T240141	TROS	470954!
T240185	TROS	40185
T240791	TROS	471466
T247667	HYST	JV1944=
T24919	JOHND	J1267=
T25013S	TROS	415995!
T25016S	TROS	416288!
T250203	TROS	481443!
T250H	MC-NO	473234
T251076	TROS	471076
T25112	JOHND	JX1386=
T25147S	TROS	415449!
T254	BUTBN	471795
T260024	HYST	471344
T260025	HYST	473230!
T260H	MC-NO	7442H
T266D	MC-NO	9613S
T270F	MC-NO	331107N
T271F	MC-NO	7692S
T272F	MC-NO	7300S
T274	BUTBN	473424!
T274F	MC-NO	7929S
T277G	MC-NO	473179
T27809	CASE	204029
T27809	CASE	204507!
T286280	HYST	417181!
T287P	MC-NO	331228H
T28889	CASE	204013
T290567	TROS	471267!
T290675	TROS	240027=
T29511	CASE	290944=
T295957	TROS	8976S
T30028	CASE	204035
T30083	TROS	472924!
T30101	TROS	412119
T30183	TROS	472179
T30300	TROS	472394
T30303S	TROS	472015!
T30316	TROS	472636!
T30352	TROS	472164!
T30487	CASE	200856
T3065057	CHRYS	228010
T30666	TROS	450666
T3087079	RENAU	224520
T3087143	RENAU	223240
T3087144	RENAU	1992
T3087157	RENAU	225110
T308D	MC-NO	473179
T331107	TROS	331107N
T331227	TROS	331227H
T331228	TROS	331228H
T331301	TROS	331301N
T335924	TROS	335924N
T33622	HYST	471224
T336819	HYST	472258!
T340364	TROS	350364
T34037	CASE	471224!
T340950	TROS	6241S
T35003	TROS	415458!
T35004	TROS	417316!
T35009	TROS	415960
T35012	TROS	416654
T35012S	TROS	416654
T35013	TROS	415995!
T35013	TROS	415995!
T35016S	TROS	416288
T35018S	TROS	476470!
T35018S	TROS	476470
T35070	TROS	416865
T350936	TROS	350936
T35095S	TROS	416271!
T35101	TROS	416282
T35101S	TROS	416282
T351071	TROS	471267!
T35137	TROS	415137!
T35137	TROS	418028
T35146	TROS	415146!
T35146	TROS	415991
T35156	TROS	5578
T35322	TROS	417484!
T35348S	TROS	475348N
T35380	TROS	410825
T354106	HYST	455509
T354119	HYST	471413
T354225	HYST	472164!
T358160	HYST	473367!
T358160	HYST	473367
T36622	HYST	471224
T371358	HYST	473435
T37225	JOHND	JV1166
T37297	CASE	471870!
T37799	CASE	200854
T39278	CASE	204002
T39419	JOHND	J1129*
T40047	CASE	210945
T40063	TROS	7886S
T40555S	TROS	40555
T40555S	TROS	40555S!
T40556	TROS	471821!
T40629	TROS	481537
T40769	TROS	40769S
T40787	TROS	340787
T409131	HYST	470898
T409163	HYST	472409!
T409165	HYST	473475
T409268	HYST	451948
T41013	TROS	7186S
T410567	TROS	471267!
T4133	GERL	471224!
T415156	TROS	417621
T415899	TROS	415899N
T415899	TROS	416624
T415983	TROS	415983N!
T41675	JOHND	J1134
T42513	HYST	415458!
T429112	HYST	415482
T42914	HYST	472397!
T429216	HYST	415072
T429247	HYST	416404!
T429250	HYST	417601
T429251	HYST	415551
T429595	HYST	472150
T42994	HYST	416865!
T42995	HYST	352541
T43331	HYST	415066
T441127	TROS	203006!
T441130	TROS	441130
T448180	HYST	55646=
T44819	HYST	415697!
T44819	HYST	455547
T448239	HYST	416888!
T450055	TROS	473215!
T450061	TROS	470950!
T450061	TROS	6241S
T450076	TROS	470334!
T451143	TROS	451143
T451147	TROS	472164
T465147	HYST	417507
T465147	HYST	417507!
T465148	HYST	417603!
T46629	HYST	415449!
T470441	TROS	471341!
T470684	TROS	471827
T480212	HYST	415960!
T480330	TROS	473452
T481193	TROS	471193
T481195	TROS	471195!
T485921	TROS	413246
T49569	TMTR	200354
T50000	OLIVE	200354
T50000	ROCKW	204002
T50000	TMTR	200354
T50006	TROS	471530
T50016	TROS	471535!
T50017	TROS	473405
T50030	TROS	474253
T50041EXA	HARN	415034!
T50044EX	HARN	415303!
T50051EXA	HARN	415034!
T50122	TROS	473437
T50188	TROS	450188
T50248	TROS	473436
T50261	TROS	473466
T50273	TROS	450273
T50275	TROS	450275
T50280	TROS	471866!
T50311	TROS	450311
T50362	TROS	450362
T50375	TROS	6936S
T50431	TROS	471539!
T50457	TROS	450457
T50485	TROS	411330!
T50487	TROS	470487!
T50524	TROS	410524
T50539	TROS	414268!
T50588	TROS	450588
T50613	TROS	471224!
T50613S	TROS	471224!
T50628	TROS	473420
T50634	TROS	472475
T50639	TROS	450639
T50911S	TROS	450911N!
T50966	TROS	472924!
T50988	TROS	473474
T50991S	TROS	480630!
T51047S	TROS	471571
T51073S	TROS	481073
T51100	TROS	471652
T51100	TROS	482208!
T51100S	TROS	471652
T51143S	TROS	451143
T5126	TROS	416738!
T5126	TROS	450096
T52008X	DOMGA	415379
T5203	COC	472439
T5289	COC	416888!
T5289	WHITE	416888!
T5358	COC	471442!
T54255	CASE	473239!
T54429	CASE	204027
T55049	TROS	416892!
T55051	TROS	415371
T55052	TROS	415284
T55052S	TROS	415284
T55054	TROS	417223
T55060	TROS	370019A
T55062	TROS	370021A
T55064	TROS	370021A
T55075	TROS	416476!
T55124	TROS	415124
T55128	TROS	415128
T55129	TROS	455129
T55172S	TROS	416332!
T55188	TROS	AR12+370033A
T55189	TROS	455189
T55197	TROS	455197N
T55232	TROS	416153!
T55234	TROS	415234!
T55251	TROS	455251H
T55251S	TROS	455251H
T55356	TROS	455356
T55361	TROS	416865
T55363	TROS	417362!
T55371	TROS	416892
T55380	TROS	410825
T55452	TROS	417597
T55476	TROS	455476
T55498	TROS	415498
T55511	TROS	2081
T55581	TROS	370023A
T55718	TROS	370019A
T5577	TROS	5095
T55963S	TROS	415379!
T5797	TROS	5797
T5833	TROS	473228
T5846	TROS	6064
T5919S	TROS	204002
T5935	TROS	473463
T59401	TROS	5320=
T5961	TROS	370036A
T5961	TROS	370349A
T59760S	TROS	335924N
T6027	TROS	471316
T6040	TROS	415899N
T6040	TROS	416624
T6094	TROS	472636!
T6195	TROS	417262=
T62701	TROS	473454
T63035	TROS	471504
T63201S	TROS	8477S
T6337S	TROS	473435
T6340S	TROS	472258
T63720	TROS	5095
T63961	TROS	472951
T63961	TROS	474252
T64101S	TROS	8705S
T64201S	TROS	8594S
T64202S	TROS	8660S
T64402S	TROS	8610
T64501R	TROS	473179
T6508	TROS	472015!
T6508S	TROS	472015!
T65202	TROS	8940S
T65240	TROS	8704S
T65261	TROS	370036A
T65261	TROS	370349A
T65261	TROS	380036A
T65262	TROS	376590A
T65298	TROS	370037A
T65298	TROS	370338A
T65300	GEHL	6590S

! Industrial Size/Type * Minor Width Difference

= The U.S. customer service number is 877-4-TIMKEN. The Canadian customer service numbers are 800-565-4927 (English) and 800-565-0438 (French-Canadian).

Mfr. No.	Name	Zero Duplication or Recommended Industrial
T65300	*OLIVE*	6590S
T65340S	*TROS*	8695S
T65360S	*TROS*	7687S
T65501S	*TROS*	9449
T6564S	*TROS*	**415449**!
T6638	*TROS*	370001A
T6646S	*TROS*	9613S
T6656	*TROS*	7300S
T6656S	*TROS*	**473234**!
T6693S	*TROS*	**470605**!
T6696	*TROS*	**417355**!
T6711	*TROS*	205004
T6712S	*TROS*	**473179**
T6755	*TROS*	**416892**
T6808	*TROS*	6808N
T6840	*TROS*	6840S
T6842	*TROS*	7600S
T6855S	*TROS*	6855N=
T6864	*TROS*	370023A
T6869S	*TROS*	370005A
T6874S	*TROS*	**473234**!
T6879S	*TROS*	**470898**!
T6951S	*TROS*	7686S
T6954	*TROS*	6954S
T6988S	*TROS*	**473459**
T7006S	*TROS*	370006A
T7018S	*TROS*	7018N=
T7022S	*TROS*	**473317**
T7031S	*TROS*	**473234**!
T7041S	*TROS*	370012A
T7044	*TROS*	7044NA
T7107	*TROS*	7107A=
T7142S	*TROS*	200110
T7338S	*TROS*	7338N
T7376	*TROS*	370003A
T7378	*TROS*	370006A
T7383S	*TROS*	321460
T74239	*JOHND*	J1139*=
T7442S	*TROS*	7442H
T7452S	*TROS*	370019A
T7453S	*TROS*	370021A
T7456S	*TROS*	7456N
T7457	*TROS*	7457N
T7487	*TROS*	7994S
T776210-3	*HYST*	**415294**!
T776408-1	*HYST*	**417316**=
T7769S	*TROS*	6241S
T7824S	*TROS*	**471193**
T8121	*TROS*	8121S
T8181	*TROS*	**472070**
T8528	*COC*	**471192**
T867366337	*GE*	**350364**
T9287	*COC*	**476838**!
T9296	*COC*	**470806**
T9364	*COC*	**417158**!
T9455	*COC*	**473229**
T9467	*COC*	**471766**!
T9498	*COC*	**254270**
T9505	*COC*	**472287**!
T95147	*TROS*	**415449**!
T95177	*TROS*	**415379**
T9554	*COC*	**471141**!
T95701	*TROS*	**415995**!
T95701	*TROS*	**415995**!
T95705	*TROS*	**415995**!
T95705	*TROS*	**415995**!
T998	*GERL*	**455019**!
TA154	*MINNM*	**473449**
TA74634	*WABCO*	455107N=
TAAK1190	*FORD*	44053
TABAJ77918AB	*FORD*	**417316**!
TACA7828A	*FORD*	**471570**!
TACA7828S	*FORD*	**471570**!
TAJAA1175A	*FORD*	370021A
TAJAA1175B	*FORD*	370021A
TAJAA1175B	*FORD*	**415351**!
TAKAA1175A	*FORD*	370004A
TAKAA1190A	*FORD*	**416130**!
TAKAA4676A	*FORD*	**416282**
TB7106	*FUNK*	**471192**
TBAA4676A	*FORD*	**451078**!
TBAA7048	*FORD*	**410308**!
TBAA7048A	*FORD*	**410308**!
TBAF4676A	*FORD*	6808N
TC-M446	*ALLCH*	**415437**
TC-M446	*ALLCH*	**415437**!
TC11236	*ROL*	16202
TC11252	*ROL*	16210
TC130069	*MARMO*	**417507**!
TC130069	*MARMO*	**417507**
TC238	*FABCO*	**471267**!
TC251	*FABCO*	**471554**!
TC284	*FABCO*	**473474**
TC422	*FABCO*	**413247**!
TC5136A	*GWI*	417584
TC523	*FABCO*	353132
TC8513	*LETN*	**417344**
TCA1175	*FORD*	**415960**!
TCAA1175A	*FORD*	**415960**!
TCAA1175A1	*FORD*	**415960**!
TCAA4676A	*FORD*	**410308**
TCAK1190	*FORD*	6954S
TCAK1190A	*FORD*	6954S
TD105598	*CHRYS*	**471224**
TD108629	*CHRYS*	**417316**!
TD1592	*CHRYS*	340413
TD256	*LETN*	**471341**!
TD339	*LETN*	**415066**
TD4358	*MINNM*	240007=
TDA-1244-U879	*ROCKW*	AR23
TDAA1175A	*FORD*	**416297**
TDAA1175A1	*FORD*	**416297**
TDAA1175A3	*FORD*	**416297**
TDAA1175B	*FORD*	**416297**
TDAA1175C	*FORD*	**416297**
TDBA1190	*FORD*	44052
TDM112	*ALLCH*	**415027**!
TDM112	*ALLCH*	**415027**
TDM137	*ALLCH*	**415995**!
TE1301	*HARN*	**473245**!
TE13010	*HARN*	417497
TE13011	*HARN*	**417357**
TE13011	*HARN*	455192!
TE13012	*HARN*	417513
TE13013	*HARN*	455197N
TE13014	*HARN*	**415196**!
TE13015	*HARN*	**415047**
TE13016	*HARN*	**472144**!
TE1302	*HARN*	**415007**
TE1303	*HARN*	**455151**
TE1304	*HARN*	**417316**!
TE1305	*HARN*	417490
TE1306	*HARN*	**417191**
TE1306	*HARN*	455165!
TE1307	*HARN*	**417196**!
TE1308	*HARN*	**415027**
TE1308	*HARN*	**415027**!
TE1309	*HARN*	**415711**
TE237	*FABCO*	**473473**
TEAA4676A	*FORD*	**410737**!
TEAN1144A	*FORD*	5487
TEAN1174A	*FORD*	5487$
TEAN1174B	*FORD*	5487$
TEAN1175B	*FORD*	**455858**
TEAN1175C	*FORD*	**455858**
TEAN1175D	*FORD*	**455858**
TEAN1181B	*FORD*	5487
TEAN1181C	*FORD*	5487
TEAN1181D	*FORD*	5487
TF1519	*AU-WS*	**417171**!
TF7198	*LETN*	**470565**!
TF98924	*WABCO*	332134
TFAA3591A	*FORD*	6597S
TG15519015	*FORSH*	155X190X15
TG17520015	*FORSH*	175X200X15
TG18020015	*FORSH*	180X200X15
TG19327	*FORSH*	19X32X8
TG20378	*FORSH*	20X37X8
TG24428	*FORSH*	24X42X8
TG33528.5	*FORSH*	33X52X8.5
TG365610	*FORSH*	36X56X10
TG38211	*LETN*	415104N=
TG426810	*FORSH*	42X68X10
TG446510	*FORSH*	44X65X10!
TG458510	*FORSH*	45X85X10
TG507510	*FORSH*	50X75X10
TG508513	*FORSH*	50X85X10
TG557810	*FORSH*	55X78X10
TG588510	*FORSH*	58X85X10
TG589010	*FORSH*	58X90X10
TG609513	*FORSH*	60X95X13
TG7010513	*FORSH*	70X105X13
TG9364	*COC*	**417316**!
TG9431	*COC*	**417205**!
TG9856	*COC*	**416706**!
TGAA1190A	*FORD*	**417134**
TL763	*WABCO*	**415351**=
TL7633	*LETN*	**415351**=
TM1469	*HEIL*	**471532**
TM1960	*AVCO*	**415458**!
TM1960	*MINNM*	**415458**!
TM527	*HU-WR*	**415645**!
TM527	*HU-WR*	455104
TM545	*HU-WR*	**416888**!
TM546	*HU-WR*	**416125**!
TO-28	*ATP*	3459
TO-35	*ATP*	320583
TO1190	*MASSE*	6336S
TO14	*ATP*	8935S
TO15	*ATP*	**471539**
TO2	*ATP*	**472354**!
TO24	*ATP*	2506
TO3	*ATP*	7392S=
TO3670	*MASSE*	**473423**
TO4	*ATP*	331228H
TO4251	*MASSE*	**417316**!
TO4251A	*MASSE*	**410987**=
TO703	*MASSE*	**471829**
TO7052	*MASSE*	**472258**
TO749	*MASSE*	**473214**
TO750	*MASSE*	**473236**!
TO8	*ATP*	331227H
TO9	*ATP*	**471827**
TP3185	*OLIVE*	204002
TR1010	*HU-WR*	**416892**!
TR1015	*HU-WR*	**415035**!
TR1015	*HU-WR*	**415035**
TR41M91723	*CINMI*	**473228**
TR8495	*LETN*	**416865**!
TRAA1175A	*FORD*	**415857**!
TRC7006	*FUNK*	**473459**
TRC70062	*FUNK*	**473459**
TRC7116	*FUNK*	**471192**
TRC71164	*FUNK*	450375!
TRC71164	*FUNK*	6936S!
TRC71164	*FUNK*	9845
TRS-005	*FORSH*	710414
TS11375	*ROL*	TCS45285
TS11430	*ROL*	TCS45472
TS11735	*ROL*	TCS45483
TS11740	*ROL*	TCS45483
TS11750	*ROL*	TCS45635
TS11760	*ROL*	TCS45635
TS11765	*ROL*	TCS45473
TS11775	*ROL*	TCS45108
TS11875	*ROL*	TCS45603
TS11900	*ROL*	TCS45689
TS11920	*ROL*	TCS45424
TS11930	*ROL*	TCS45700
TS11965	*ROL*	TCS45724
TS11985	*ROL*	TCS45506
TS12015	*ROL*	TCS45725
TS12025	*ROL*	TCS45727
TS12230	*ROL*	TCS45847
TS12250	*ROL*	TCS45483
TS12305	*ROL*	TCS45860
TS12385	*ROL*	TCS45901
TS12465	*ROL*	TCS45718
TS12470	*ROL*	TCS45719
TS12495	*ROL*	TCS45939
TS12505	*ROL*	TCS45699
TS12545	*ROL*	TCS45870
TS240U5	*NORDG*	**472193**!
TS700011	*FUNK*	**471835**!
TUAA1174A	*FORD*	5951
TUAA1175A	*FORD*	415060
TUAA1175A	*FORD*	455060
TUAA1181A	*FORD*	5951
TUAA1190	*FORD*	370001A
TUAY1190A	*FORD*	370001A
TUAY1190A	*FORD*	6638S
TVAA4463A	*FORD*	**470565**!
TVAA4478A	*FORD*	**410737**!
TVAA4676A	*FORD*	**410987**!
TVAA4676A	*FORD*	450686
TVAA77918A2	*FORD*	**415449**!
TVAA77918A3	*FORD*	**415449**!
TVAA77952A	*FORD*	**471267**!
TVCE77918A	*FORD*	**415449**!
TW1029U	*NORDG*	**411245**!
TX101	*COTTA*	**471466**!
TX103	*COTTA*	**471554**!
TX105	*COTTA*	**471137**
TX106	*COTTA*	**450040**
TX107	*COTTA*	**471649**!
TX108	*COTTA*	**450593**!
TX109	*COTTA*	**476838**!
TX110	*COTTA*	**473205**!
TX111	*COTTA*	**471750**!
TX114	*COTTA*	**471795**
TX115	*COTTA*	**471762**!
TX117	*COTTA*	**473215**!
TX118	*COTTA*	470950!
TX118	*COTTA*	6241S
TX122	*COTTA*	**474281**!
TX123	*COTTA*	**471821**!
TX124	*COTTA*	**473367**!
TX125	*COTTA*	**472185**!
TX126	*COTTA*	**470334**!
TX127	*COTTA*	**473447**
TX128	*COTTA*	**472924**!
TX129	*COTTA*	**450084**!
TX130	*COTTA*	**472397**!
TX131	*COTTA*	**410102**
TX132	*COTTA*	**472015**!
TX133	*COTTA*	**413469**!
TX134	*COTTA*	**411253**!
TX136	*COTTA*	**412119**!

! Industrial Size/Type * Minor Width Difference $ F-M Number Is Part Of A Kit
= The U.S. customer service number is 877-4-TIMKEN. The Canadian customer service numbers are 800-565-4927 (English) and 800-565-0438 (French-Canadian).

Mfr. No.	Name	Zero Duplication or Recommended Industrial
TX139	*COTTA*	**415449**!
TX140	*COTTA*	**415001**!
TX141	*COTTA*	**415458**!
TX142	*COTTA*	**415007**
TX143	*COTTA*	**417316**!
TX144	*COTTA*	**415960**!
TX145	*COTTA*	**415960**!
TX146	*COTTA*	**415995**!
TX147	*COTTA*	**417488**!
TX149	*COTTA*	**417171**!
TX150	*COTTA*	**417171**!
TX151	*COTTA*	**476470**
TX152	*COTTA*	415137!
TX152	*COTTA*	**418028**
TX153	*COTTA*	**415023**
TX154	*COTTA*	**415025**
TX155	*COTTA*	**415991**
TX155	*COTTA*	455146!
TX155	*HARN*	**415991**
TX155	*HARN*	455146!
TX156	*COTTA*	**415991**
TX156	*COTTA*	**415991**!
TX157	*COTTA*	**415027**
TX157	*COTTA*	**415027**!
TX159	*COTTA*	**417205**!
TX160	*COTTA*	**415034**!
TX161	*COTTA*	**415036**
TX162	*COTTA*	**415047**
TX163	*COTTA*	**415991**
TX163	*COTTA*	**415991**!
TX164	*COTTA*	**417538**
TX165	*COTTA*	**417269**!
TX166	*COTTA*	**415072**
TX168	*COTTA*	**416654**!
TX172	*COTTA*	**473225**!
TX274	*COTTA*	**416271**!
TX275	*COTTA*	**415449**!
TX277	*COTTA*	**473258**!
TX278	*COTTA*	**416892**!
TX281	*COTTA*	**472179**
TX283	*COTTA*	**476470**
TX284	*COTTA*	**417355**!
TX285	*COTTA*	**416891**!
TX286	*COTTA*	455024
TX287	*COTTA*	**415991**
TX287	*COTTA*	455146!
TX288	*COTTA*	455197N
TX289	*COTTA*	**416288**!
TX291	*COTTA*	**472636**!
TX292	*COTTA*	**415035**
TX292	*COTTA*	**415035**!
TX293	*COTTA*	**415007**
TX294	*COTTA*	**415995**!
TX295	*COTTA*	**471272**!
TX298	*COTTA*	**470380**!
TX299	*COTTA*	**416332**!
TX300	*COTTA*	**471820**
TX301	*COTTA*	**415001**!
TX302	*COTTA*	**476838**!
TX303	*COTTA*	**471141**!
TX304	*COTTA*	**471276**
TX305	*COTTA*	**473214**!
TX307	*COTTA*	**415021**
TX308	*COTTA*	**416271**!
TX309	*COTTA*	**450400**
TX310	*COTTA*	**471271**!
TX314	*COTTA*	**417349**
TX315	*COTTA*	**416664**!
TX316	*COTTA*	**415984**!
TX318	*COTTA*	**415302**
TX321	*COTTA*	**415991**!
TX321	*COTTA*	**415991**

Mfr. No.	Name	Zero Duplication or Recommended Industrial
TX326	*COTTA*	**471984**
TX327	*COTTA*	**417487**!
TX327	*COTTA*	**417487**
TX328	*COTTA*	**417487**
TX334	*COTTA*	**470898**
TX337	*COTTA*	**474265**
TX338	*COTTA*	**416706**!
TX339	*COTTA*	**416865**!
TX340	*COTTA*	**416865**!
TX341	*COTTA*	**415082**
TX342	*COTTA*	**411253**!
TX343	*COTTA*	**470605**!
TX345	*COTTA*	**416865**!
TX348	*COTTA*	**481864**
TX349	*COTTA*	**473225**
TX351	*COTTA*	450275
TX352	*COTTA*	**471504**
TX355	*COTTA*	**476470**!
TX355	*COTTA*	**476470**
TX357	*COTTA*	**416888**!
TX359	*COTTA*	**471272**!
TX363	*KEN*	**415991**
TX363	*KEN*	**415991**!
TX363	*PACIF*	**415991**
TX363	*PACIF*	**415991**!
TX366	*COTTA*	**415449**!
TX367	*COTTA*	**417316**!
TX368	*COTTA*	**416654**!
TX369	*COTTA*	**415725**!
TX371	*COTTA*	**415379**
TX371	*COTTA*	**415379**!
TX373	*COTTA*	**473179**!
TX374	*COTTA*	**416288**!
TX376	*COTTA*	**415995**!
TX377	*COTTA*	**416288**!
TX378	*COTTA*	**417487**!
TX378	*COTTA*	**417487**
TX379	*COTTA*	**476470**
TX380	*COTTA*	**471267**!
TX381	*COTTA*	**411376**!
TX382	*COTTA*	**412473**!
TX383	*COTTA*	**417171**!
TX388	*COTTA*	**417316**!
TX389	*COTTA*	**471271**!
TX390	*COTTA*	**472397**!
TX392	*COTTA*	**415072**
TX395	*COTTA*	**472705**!
TX398	*COTTA*	**412119**!
TX399	*COTTA*	**471271**!
TX401	*COTTA*	**415088**
TX401	*COTTA*	**415088**!
TX403	*COTTA*	**472164**!
TX404	*COTTA*	**470605**!
TX406	*COTTA*	**416888**!
TX407	*COTTA*	456199=
TX408	*COTTA*	**455123**
TX409	*COTTA*	**415088**
TX410	*COTTA*	**416125**!
TX411	*COTTA*	240735
TX412	*COTTA*	**455655**!
TX413	*COTTA*	**415035**
TX414	*PACIF*	**471192**
TX416	*COTTA*	**417082**
TX419	*COTTA*	**412920**!
TX420	*COTTA*	**417316**!
TX421	*COTTA*	**416404**!
TX426	*COTTA*	**472157**!
TX426	*COTTA*	**472157**
TX428	*COTTA*	**471341**!
TX429	*COTTA*	**415150**!
TX430	*COTTA*	**450084**!
TX441	*COTTA*	**417351**!

Mfr. No.	Name	Zero Duplication or Recommended Industrial
TX444	*COTTA*	**416167**!
TX445	*COTTA*	**416229**
TX446	*COTTA*	**415138**!
TX448	*COTTA*	**415960**!
TX449	*COTTA*	**415449**!
TX450	*COTTA*	**417269**!
TX451	*COTTA*	**417967**!
TX452	*COTTA*	**472144**!
TX454	*COTTA*	**417254**
TX456	*COTTA*	**473237**!
TX457	*COTTA*	**412027**
TX458	*COTTA*	**415294**!
TX459	*COTTA*	**472492**!
TX460	*COTTA*	**417357**
TX460	*COTTA*	455192!
TX462	*COTTA*	**415035**!
TX464	*COTTA*	**470380**!
TX467	*COTTA*	**415041**
TX468	*COTTA*	**415371**
TX469	*COTTA*	**415138**!
TX472	*COTTA*	**470565**!
TX473	*COTTA*	**415303**=
TX476	*COTTA*	**473474**
TX479	*COTTA*	**416345**!
TX479	*COTTA*	455033
TX481	*COTTA*	**471341**!
TX482	*COTTA*	**473466**
TX483	*COTTA*	**416921**!
TX485	*COTTA*	**470954**!
TX489	*COTTA*	415060
TX494	*COTTA*	**417351**!
TX498	*COTTA*	**415725**!
TX500	*COTTA*	**417247**!
TX501	*COTTA*	416287
TX501	*COTTA*	**416288**!
TX502	*COTTA*	**415035**!
TX503	*COTTA*	**416339**
TX503	*COTTA*	455031!
TX504	*COTTA*	**417316**!
TX507	*COTTA*	**417191**
TX510	*COTTA*	**417172**
TX511	*COTTA*	**415991**
TX511	*COTTA*	455146!
TX514	*COTTA*	**415995**!
TX526	*COTTA*	**472164**!
TX52759	*JOHND*	**470530**!
TX529	*COTTA*	**471413**!
TX52906	*JOHND*	**417343**!
TX550	*COTTA*	**472016**
TX558	*COTTA*	**416444**
TX559	*COTTA*	**415379**
TX559	*COTTA*	**415379**!
TX561	*COTTA*	**416271**!
TX562	*COTTA*	**472185**!
TX567	*COTTA*	**470898**
TX570	*COTTA*	**471192**
TX571	*COTTA*	**412920**!
TX572	*COTTA*	**471138**!
TX603	*COTTA*	**472164**!
TX657	*COTTA*	**470898**
TX660	*COTTA*	**415483**
TX684	*COTTA*	**472016**!
TX685	*COTTA*	**472164**!
TX7563	*MASSE*	**472397**!
TXA28610	*MASSE*	340724!
U11243	*IH*	**471137**
U1227	*ALLCH*	**415007**
U12688	*JOHND*	**416345**!
U12688	*JOHND*	455033
U14264	*JOHND*	**472164**!
U14488	*JOHND*	**412920**!
U16633	*IH*	**471766**!

Mfr. No.	Name	Zero Duplication or Recommended Industrial
U17942	*IH*	**471137**
U17943	*IH*	**471766**!
U17944	*IH*	**476838**!
U195	*ALLCH*	**472409**!
U196	*ALLCH*	**473367**
U196	*ALLCH*	**473367**!
U2104	*ALLCH*	5M403
U2602	*ALLCH*	**473462**
U2674	*ALLCH*	**473215**!
U303A	*CALSO*	**472164**!
U40370	*JOHND*	**412920**
U41491	*JOHND*	200875=
U41989	*JOHND*	**476470**
U41989	*JOHND*	**476470**!
U4213	*SPICE*	**473423**
U43766	*JOHND*	200870
U43767	*JOHND*	JV980=
U44336	*JOHND*	**416149**
U481521	*LAZOR*	35094
U481726	*LAZOR*	25598
U49-8092	*LAZOR*	1172
U49-8106	*LAZOR*	229210
U49-8254	*LAZOR*	1108
U49-8262	*LAZOR*	716102
U49-8319	*LAZOR*	710205
U49-8327	*LAZOR*	227040
U49-8327	*LAZOR*	BS25035
U49-8335	*LAZOR*	227530
U49-8343	*LAZOR*	229005
U49-8351	*LAZOR*	223540
U49-8360	*LAZOR*	224865
U49-8378	*LAZOR*	224250
U49-8408	*LAZOR*	223010
U49-8416	*LAZOR*	3771
U49-8424	*LAZOR*	223035
U49-8432	*LAZOR*	224025
U49-8440	*LAZOR*	1873
U49-8556	*LAZOR*	3476
U49-8556	*LAZOR*	710310
U49-9021	*LAZOR*	224250
U49-9056	*LAZOR*	224520
U49-9064	*LAZOR*	226480
U498521	*LAZOR*	BS40382
U498530	*LAZOR*	BS25035
U503	*CALSO*	**472164**!
U8-G20	*OSHKO*	**415023**
U81-8321	*LAZOR*	224462
U81-8496	*LAZOR*	239146
U81-8500	*LAZOR*	1176
U81-8518	*LAZOR*	223014
U81-8526	*LAZOR*	224252
U81-8534	*LAZOR*	224462
U81-8550	*LAZOR*	**473238**!
U81-8550	*LAZOR*	9912
U81-8569	*LAZOR*	224820
U81-8577	*LAZOR*	1208
U81-8585	*LAZOR*	225010
U81-8593	*LAZOR*	1960
U81-8615	*LAZOR*	226020
U81-8631	*LAZOR*	1174
U81-8640	*LAZOR*	1217
U81-8658	*LAZOR*	482126
U81-8666	*LAZOR*	1962
U81-8666	*LAZOR*	224015
U81-8674	*LAZOR*	224835
U81-8682	*LAZOR*	224835
U81-8690	*LAZOR*	344032
U81-8720	*LAZOR*	226520
U81-8739	*LAZOR*	225420
U81-8747	*LAZOR*	**473234**!
U81-8755	*LAZOR*	224820
U81-8771	*LAZOR*	239129

! Industrial Size/Type
= The U.S. customer service number is 877-4-TIMKEN. The Canadian customer service numbers are 800-565-4927 (English) and 800-565-0438 (French-Canadian).

Mfr. No.	Name	Zero Duplication or Recommended Industrial
U81-8828	LAZOR	**472213**
U81-9034	LAZOR	1960
U81-9050	LAZOR	224045
U81-9069	LAZOR	224835
U81-9085	LAZOR	225500
U81-9093	LAZOR	225010
U81-9107	LAZOR	710309
U81-9123	LAZOR	**471224**!
U81-9131	LAZOR	6370N
U81-9140	LAZOR	223510
U81-9158	LAZOR	1120
U81-9166	LAZOR	**471192**
U81-9174	LAZOR	**1213N**
U81-9182	LAZOR	224520
U81-9190	LAZOR	**472164**!
U81-9204	LAZOR	223535
U81-9808	LAZOR	65X80X8
U818542	LAZOR	1012
U818542	LAZOR	1012N
U818542	LAZOR	710321
U818810	LAZOR	224020
U818810	LAZOR	3392
U819026	LAZOR	224235
U819115	LAZOR	1012
U819115	LAZOR	1012N
U997	ALLCH	**411253**!
UA0029E0	NOK	**415960**
UA0062E0	NOK	477163N
UA0068E0	NOK	**415088**
UA0071E0	NOK	456618
UA0072E0	NOK	415060
UA0072E0	NOK	455060
UA0073E0	NOK	**417530**
UA0074E0	NOK	**417507**
UA0078E0	NOK	**415958**
UA0080E0	NOK	415983
UA0080E0	NOK	415983N!
UA0083E0	NOK	**470764**!
UA0083E0	NOK	50764
UA0085E0	NOK	**455019**!
UA0089E0	NOK	**413469**!
UA0091E	NOK	417548
UA0091E0	NOK	417548
UA0123E0	NOK	**412943**
UA0160E	NOK	6638S
UA0160E0	NOK	6638S
UA0220E	NOK	311189
UA0220E0	NOK	311189
UA0504E	NOK	**416500**
UA0504E0	NOK	**416500**
UA0509E	NOK	2674
UA0509E0	NOK	2674
UA0512E	NOK	**417484**!
UA0512E0	NOK	**417484**!
UA5087	TW-DI	415104H=
UB0017E0	NOK	**471231**!
UB0040E0	NOK	**450040**
UB0065E0	NOK	100495
UB0065E0	NOK	**417349**
UB0084E0	NOK	**474254***
UB0084E0	NOK	**474254**!
UB0086E	NOK	6703S
UB0086E0	NOK	6703S
UB0105E0	NOK	**473449**!*
UB0109E0	NOK	7994S
UB0142E	NOK	3945
UB0142E0	NOK	3945
UB0176E	NOK	2377
UB0176E0	NOK	2377
UB0218E	NOK	331301N
UB0218E0	NOK	331301N
UB0368E	NOK	**471504***
UB0368E	NOK	**471504**!
UB0368E0	NOK	**471504***
UB0368E0	NOK	**471504**!
UB0372E	NOK	**472354**!
UB0372E0	NOK	**472354**!
UB0441E	NOK	710202
UB0452E	NOK	**473179**
UB0452E0	NOK	**473179**
UB0498E	NOK	**253099**
UB0498E0	NOK	**253099**
UB0499E	NOK	**471539**!
UB0499E0	NOK	**471539**!
UB0501E	NOK	7013S
UB0501E0	NOK	7013S
UB0555E	NOK	710241
UB0555E0	NOK	710241
UB1	JOHND	**471646**!
UB124	WHITE	**415035**
UB124	WHITE	**415035**!
UB40-26-157	CHRYS	1994
UC0159E	NOK	7412S
UC0159G	NOK	7412S
UC0380E0	NOK	35X62X7!
UC0384E0	NOK	25X47X7
UC0442E	NOK	45X72X7!
UC0442E0	NOK	45X72X12!
UC0442E0	NOK	45X72X95
UC0465E0	NOK	12X28X7
UC0599E0	NOK	25X35X7!
UCB521	CLSTL	**473237**!
UD0024ED	NOK	**472446**
UD0035E0	NOK	**471413**
UD0053E0	NOK	470706=
UD0061E0	NOK	**415303**=
UD0066E0	NOK	**415035**
UD0075E	NOK	**472012**
UD0075E0	NOK	**472012**
UD0076E	NOK	39807
UD0076E0	NOK	39807
UD0166E	NOK	4122
UD0166E	NOK	470547
UD0166EO	NOK	4122
UD0166EO	NOK	470547
UD0168E	NOK	474127
UD0172E0	NOK	62X85X8!
UD0173E	NOK	8695S
UD0173E0	NOK	8695S
UD0241E	NOK	**331107N**
UD0241E0	NOK	**331107N**
UD0451E	NOK	9449
UD0451E0	NOK	9449
UD0453E	NOK	7044NA
UD0453E0	NOK	7044NA
UD0507E	NOK	3893V!
UD0507E	NOK	**415379**!
UD0507E0	NOK	3893V!
UD0507E0	NOK	**415379**!
UD0508E	NOK	3385
UD0508E0	NOK	3385
UD0520E	NOK	95X115X13
UD0520E0	NOK	95X115X12
UD0624E0	NOK	50X70X8!
UD0624E0	NOK	50X70X9
UD0751E0	NOK	15X35X7
UE-0321-E0	NOK	**473259**
UE0009E0	NOK	**473551**
UE0077E0	NOK	25X52X10
UE0077E0	NOK	25X52X7!
UE0112E	NOK	**471744**!
UE0112E0	NOK	**471744**!
UE0152E	NOK	**473258**!
UE0152E0	NOK	**473258**!
UE0205E	NOK	**472324**!
UE0205E0	NOK	**472324**!
UE0282E	NOK	**470774**=
UE0319E	NOK	**481397**
UE0319E0	NOK	**481397**
UE0323E0	NOK	**482310**
UE0463E0	NOK	85X125X12
UE0485E0	NOK	15X30X7
UE0665E0	NOK	26X38X5!
UE0667E0	NOK	17X47X8
UE0668E0	NOK	12X25X7
UE0670E0	NOK	15X35X7
UE0671E0	NOK	15X24X7
UE0673E0	NOK	20X30X7
UEU0334E0	NOK	35X52X8!
UF-0532-E0	NOK	**472311**
UF0014E0	NOK	440972
UF0015E0	NOK	482126
UF0018E	NOK	340136
UF0018E0	NOK	340136
UF0018F	NOK	40468
UF0018F0	NOK	40468
UF0023E0	NOK	204038
UF0030E0	NOK	204008
UF0032E0	NOK	40141*
UF0038E	NOK	6815
UF0038E0	NOK	6815
UF0058E0	NOK	204002
UF0067E	NOK	40316S
UF0067E0	NOK	40316S
UF0075E0	NOK	6954S
UF0098F	NOK	240733
UF0098F0	NOK	240733
UF0114E	NOK	7607
UF0114E0	NOK	7607
UF0115E0	NOK	**471316**
UF0116E0	NOK	203071=
UF0138E0	NOK	**470954**
UF0144E	NOK	**471795**
UF0144E0	NOK	**471795**
UF0195E	NOK	4148
UF0195E0	NOK	4148
UF0200E	NOK	5121
UF0200E0	NOK	5121
UF0213E	NOK	4148
UF0213E	NOK	**471424**!
UF0213E0	NOK	4148
UF0213E0	NOK	**471424**!
UF0215E	NOK	442380
UF0215E0	NOK	442380
UF0216E	NOK	6954S
UF0216E0	NOK	6954S
UF0217E	NOK	**473317**
UF0217E0	NOK	**473317**
UF0219E	NOK	3087
UF0219E0	NOK	3087
UF0225E	NOK	8871
UF0225E0	NOK	8871
UF0230E	NOK	8121S
UF0230E0	NOK	8121S
UF0260E	NOK	8705S
UF0260E0	NOK	8705S
UF0491E	NOK	9406S
UF0491E0	NOK	9406S
UF0495E	NOK	8871
UF0495E0	NOK	8871
UF0496E	NOK	**330385**
UF0496E0	NOK	**330385**
UF0497E	NOK	340787
UF0497E0	NOK	340787
UF0500E	NOK	40520S
UF0500E0	NOK	40520S
UF0502E	NOK	343105!
UF0502E	NOK	7399S
UF0502E0	NOK	343105!
UF0502E0	NOK	7399S
UF0505E	NOK	2222
UF0505E0	NOK	2222
UF0506E	NOK	44052
UF0506E0	NOK	44052
UF0820E	NOK	1932
UF0820E0	NOK	56X68X10
UG0081E0	NOK	8976S
UG0203E0	NOK	**471652**
UG0424F0	NOK	16X24X6
UH-0516-E	NOK	710426
UH-0598-E0	NOK	710388
UH-0946-E	NOK	710431
UH-0946-E0	NOK	710431
UH0004E	NOK	9599S
UH0004E0	NOK	9599S
UH0022F0	NOK	710263
UH0022H0	NOK	710263
UH0043E	NOK	3348
UH0043E0	NOK	3348
UH0047E	NOK	8835S
UH0047E0	NOK	8835S
UH0097F0	NOK	35X50X8!
UH0097F0	NOK	3774
UH0102E	NOK	9773
UH0102E0	NOK	9773
UH0111E	NOK	3772
UH0111E0	NOK	3772
UH0111G0	NOK	3772
UH0164E	NOK	3909
UH0164E0	NOK	3909
UH0164G0	NOK	3909
UH0164J0	NOK	3909
UH0190E	NOK	9613S
UH0190E0	NOK	9613S
UH0193F	NOK	710075
UH0193F0	NOK	710075
UH0193FO	NOK	710075
UH0208E0	NOK	4810V
UH0214E	NOK	4250
UH0214E0	NOK	4250
UH0226E0	NOK	38X55X7!
UH0238F	NOK	713750
UH0238F0	NOK	713750
UH0241E	NOK	472341!
UH0241E0	NOK	472341!
UH0246E	NOK	2146
UH0278F0	NOK	9845
UH0287F0	NOK	3698
UH0327E	NOK	477163N
UH0335E	NOK	**473452**
UH0335E0	NOK	**473452**
UH0335F0	NOK	714675
UH0336F	NOK	95X115X13
UH0336F0	NOK	95X115X12
UH0336G	NOK	4359V
UH0336G0	NOK	4359V
UH0337E0	NOK	3638*
UH0341E0	NOK	3173
UH0341E0	NOK	710928
UH0351E	NOK	3655
UH0351E0	NOK	3655
UH0389E0	NOK	4810V!
UH0390E	NOK	712000
UH0390F	NOK	712000
UH0394F0	NOK	710101
UH0394G0	NOK	710101
UH0395F0	NOK	710105
UH0397G0	NOK	**473454**

! Industrial Size/Type * Minor Width Difference

= The U.S. customer service number is 877-4-TIMKEN. The Canadian customer service numbers are 800-565-4927 (English) and 800-565-0438 (French-Canadian).

Mfr. No.	Name	Zero Duplication or Recommended Industrial
UH0403F0	NOK	320259
UH0404E0	NOK	35X50X8!
UH0424E0	NOK	714503
UH0424F	NOK	714503
UH0424F0	NOK	714503
UH0490E	NOK	3214
UH0490E0	NOK	3214
UH0492E	NOK	331228H
UH0492E0	NOK	331228H
UH0493E	NOK	**472070**
UH0493E0	NOK	**472070**
UH0494E	NOK	3604
UH0494E0	NOK	3604
UH0543E	NOK	4370N
UH0549E0	NOK	42X62X8!
UH0550E0	NOK	1966
UH0630E0	NOK	40375
UH0728F0	NOK	9845
UH0757E0	NOK	4307V!
UH0766E	NOK	115X135X15!
UH0766E0	NOK	710258
UH0773F	NOK	110X130X12
UH0773F0	NOK	2261
UH0789E0	NOK	710211
UH0816E	NOK	228410
UH0816E0	NOK	228410
UH0819E1	NOK	2377
UH0841E0	NOK	710261
UH0910E	NOK	4333N
UH0951E	NOK	710046
UH0951E0	NOK	710046
UH5005E	NOK	710451
UH528E0	NOK	50199S!
UH528E0	NOK	6863S!
UHO351E0	NOK	35X52X8!
UJ107	C-R	MD1000
UJ51	UNIVE	**473227**
UJ75	UNIVE	**471692**!
UP0079E0	NOK	**472705**!
UP0119E	NOK	**471224**!
UP0119E0	NOK	**471224**!
UP0811E	NOK	222630
US95133	C-P	240385
USN14	ATHEY	**474253**!
UT309	MINNM	**473236**!
UT309	WHITE	**473236**!
UT374	MINNM	**417621**!
UT374	WHITE	**417171**!
UT459	MINNM	**415027**
UT459	MINNM	**415027**!
UT459A	MINNM	**415437**
UT459A	WHITE	**415437**
UW-0454-E	NOK	710402
UW-0454-E0	NOK	710402
UW-0561-E0	NOK	710389
UW-0895-E	NOK	710403
UW0103E	NOK	712937
UW0103E0	NOK	712937
UW0134E	NOK	**473237**
UW0134E0	NOK	**473237**
UW0134F	NOK	**473237**
UW0179F	NOK	4141
UW0179F0	NOK	4141
UW0180E	NOK	710063
UW0180E0	NOK	710063
UW0180F	NOK	4143
UW0180G0	NOK	4143
UW0194E	NOK	**472572**
UW0194E0	NOK	**472572**
UW0910E	NOK	4333N
UW0914E	NOK	**472572**
UZ-0516-F	NOK	710441
UZ0206E	NOK	4561V
UZ0206E0	NOK	4561V
UZ0207E0	NOK	4562V
UZ0207F0	NOK	4562V
UZ0212E	NOK	**416404**!
UZ0212E0	NOK	9864S
UZ0249E	NOK	5313
UZ0249E0	NOK	5313
UZ0258E1	NOK	5210
UZ0261E0	NOK	4564V
UZ0263E0	NOK	**415082**
UZ0264E0	NOK	**415995**
UZ0265E0	NOK	100494
UZ0265E0	NOK	**476470**
UZ0266E0	NOK	**417484**
UZ0266E0	NOK	4874N
UZ0290F0	NOK	4544V
UZ0301E	NOK	370036A
UZ0301E	NOK	370349A
UZ0301E0	NOK	370036A
UZ0301E0	NOK	370349A
UZ0302E	NOK	370065A
UZ0302E0	NOK	370065A
UZ0303E	NOK	386025A
UZ0303E	NOK	**416158**
UZ0303E0	NOK	386025A
UZ0303E0	NOK	**416158**
UZ0305E	NOK	370001A
UZ0305E0	NOK	370001A
UZ0306E	NOK	370023A
UZ0306E	NOK	5667
UZ0307E	NOK	370021A
UZ0307E0	NOK	370021A
UZ0308E	NOK	370005A
UZ0308E0	NOK	370005A
UZ0466E	NOK	4503N
UZ0466E0	NOK	**472572**
UZ0466F	NOK	4503N
UZ0510E	NOK	6612S
UZ0510E0	NOK	6612S
V1004	HUGKE	**473240**!
V1034	HUGKE	**415088**
V1034	HUGKE	**415088**!
V1055	HUGKE	40337S
V1064	HUGKE	**413246**
V127016	RACIN	**481537**
V12701C	RACIN	**471466**!
V12701E	RACIN	**450188**
V12701F	RACIN	**471442**!
V12701S	RACIN	**471224**!
V12701U	RACIN	**471341**!
V12701V	RACIN	**473231**!
V12701X	RACIN	**450188**
V12701Z	RACIN	**472164**!
V13924	CASE	413310=
V14651	CASE	**473224**!
V14653	CASE	**471224**
V14654	CASE	**455134**!
V14655	CASE	**470605**!
V14656	CASE	**330385**!
V14657	CASE	**472560N**!
V14661	CASE	**323138**!
V224	CASE	**472070**
V2520	IRON	**473444**
V3187	WAGNR	**416654**!
V3188	WAGNR	**415995**!
V3202	WAGNR	**415027**
V3202	WAGNR	**415027**!
V3270	WAGNR	**416271**!
V3312	WAGNR	**418028**
V3312	WAGNR	455137!
V3321	WAGNR	**415991**
V3321	WAGNR	455146!
V3322	WAGNR	**415449**!
V3324	WAGNR	**417343**!
V3471	WAGNR	**417082**
V410537SS	SPG	5711
V414072SC	SPG	226285
V414072SC	SPG	62X85X8!
V4249CA1	SPG	4249
V4258S	SPG	710425
V4259SS	SPG	710562
V4348X	WHITE	**415449**!
V454073SS	SPG	225875
V454073SS	SPG	58X75X11!
V457997SS	SPG	457997
V458009VG	SPG	458009V
V4665	IRON	**473367**!
V4665	IRON	**473367**
V474096SC	SPG	225110
V474096SC	SPG	51X65X7!
V474097SC	SPG	223605
V474097SC	SPG	36X50X7!
V481100VD	NATL	**471652**
V4812A23	WAGNR	**415263**
V4815A15	WAGNR	6886S
V484063SS	SPG	223535
V495782BG	SPG	495782
V4990BG	SPG	4990
V5459	IRON	**412920**!
V6043	MINNM	**473231**
V657S	CASE	**471224**
V8020698	WHITE	370003A
V93HF-6701-AA	FORD	712100
VA18291	WABCO	**415124**
VC2044	WABCO	455472=
VC93086	WABCO	**416888**=
VC9667	LETN	**415995**!
VC985	LETN	**415227**=
VD12473	WABCO	**416865**
VH425	IRON	**472287**!
VH430	IRON	**473458**!
VH5111	WABCO	**415072**
VH599	IRON	470950!
VH599	IRON	6241S
VJ964	NORDG	40085S
VL1245	LETN	**415234**!
VL22673	WABCO	**471341**!
VL2570	LETN	455556
VL25702	WABCO	455556
VL2588	LETN	**413247**!
VL2621	LETN	**417353**!
VL2986	LETN	**416364**!
VL6062	WABCO	**417020**
VL8656	WABCO	**472636**!
VM1154	OLIVE	**471766**!
VM1585	OLIVE	**417191**
VM1585	OLIVE	456585
VM440	OLIVE	**412473**!
VM671	OLIVE	**473228**
VN3657	LETN	J1136
VP2099	LETN	J1106
VP2099	WABCO	J1106
VP223	F-R-H	**470530**!
VP224	F-R-H	**415027**!
VP224	F-R-H	**415027**
VP5012	WABCO	**416624**!
VS3920	WABCO	**415263**
VT1020	MINNM	**471763**
VT204	MINNM	340413
VT2090	CASE	**472179**
VT2095	CASE	**470898**
VT2115	CASE	**473426**
VT2233	CASE	**472287**!
VT2316	CASE	450803
VT2817	CASE	**471689**!
VT2905	CASE	**471442**!
VT3249	CASE	**412473**!
VT3373	CASE	**473467**
VT3401	CASE	**471765**!
VT3460	CASE	**415458**!
VT3465	CASE	**472636**!
VT3502	CASE	**415458**!
VT3520	CASE	**473215**!
VT3525	CASE	**471466**!
VT3555	CASE	**472287**!
VT3688	CASE	**471224**!
VT3756	CASE	**471192**
VT3757	CASE	**471192**
VT4443	CASE	**471766**!
VT4447	CASE	**473367**
VT4447	CASE	**473367**!
VT4896	CASE	**471466**!
VT4897	CASE	**471267**!
VT4903	CASE	**471529**
VT4928	CASE	**471539**!
VT4933	CASE	**471633**!
VT4992	CASE	**471341**!
VT7116	FUNK	**472572**!
VT7139	FUNK	**472164**!
VT815	MINNM	**470712**!
VT901	MINNM	**472015**!
VX1322	COTTA	J1103
VXS80	COC	**471224**!
VY2163	LETN	**416282**
VY67161	WABCO	**417238**
VZ2731	WABCO	**412725**
VZ3178	WABCO	710040
VZ4044	WABCO	710027
VZ4339	WABCO	710030
VZ51501	WABCO	**417344**
VZ53021	WABCO	**415035**
W026901	HERCU	J1127
W03HH101	SPICE	370001A
W03HH101	SPICE	380001A
W087601	HERCU	**473214**!
W089401	HERCU	**473464**
W093801	HERCU	J1128
W097801	HERCU	J1134
W10-149	W-PTS	223035
W10-653	W-PTS	3476
W10-657	W-PTS	1110
W10-659	W-PTS	224025
W10-664	W-PTS	3771
W10-665	W-PTS	**473237**!
W10-669	W-PTS	**473237**!
W10-703	W-PTS	228010
W10-704	W-PTS	716102
W10-708	W-PTS	228010
W10-711	W-PTS	226480
W10-714	W-PTS	1873
W10-718	W-PTS	227410
W10-719	W-PTS	716102
W10-900	W-PTS	716102
W10098S	CASE	**415001**!
W10150	W-PTS	227040
W10150	W-PTS	70X90X10!
W10154	W-PTS	226020
W10154	W-PTS	60X80X8!
W10154S	CASE	450275
W10439S	CASE	6575S
W10642S	CASE	**473228**
W10650	W-PTS	223840
W10650	W-PTS	38X58X8!
W10652	W-PTS	224560
W10652	W-PTS	45X68X7!

! Industrial Size/Type
= The U.S. customer service number is 877-4-TIMKEN. The Canadian customer service numbers are 800-565-4927 (English) and 800-565-0438 (French-Canadian).

Mfr. No.	Name	Zero Duplication or Recommended Industrial
W10655	W-PTS	1994
W10655	W-PTS	48X70X9!
W10661	W-PTS	224520
W10661	W-PTS	45X60X10!
W10662	W-PTS	225020
W10662	W-PTS	50X68X8!
W10663	W-PTS	223830
W10663	W-PTS	38X55X7!
W10668	W-PTS	1994
W10668	W-PTS	48X70X9!
W10709	W-PTS	2001
W10709	W-PTS	60X82X12!
W1103	HU-WR	**470530**!
W1169	HU-WR	**472016**
W117701	HERCU	**471570**!
W118001	HERCU	**472164**!
W1260	WOOL	**415088**
W1260	WOOL	**415088**!
W126011035	WOOL	**415088**!
W126011035	WOOL	**415088**
W136301	HERCU	J1103
W137701	HERCU	J1107
W139701	HERCU	J1123
W140001	HERCU	**416294**=
W15475	CASE	**410825**
W1581	WOOL	**473227**
W158111035	C-W	**473227**
W158111035	WOOL	**473227**
W176511035	WOOL	**415047**
W182401	HERCU	471781N=
W208K2E9003	FAFNI	200110
W23838	JOHND	**472535**
W320678BX	SPG	225650
W370025BX	SPG	**416158**
W45-111	W-PTS	222242
W45-117	W-PTS	3051N
W45-143	W-PTS	222242
W45116	W-PTS	223010
W45116	W-PTS	30X42X7!
W4558VDR	SPG	4795V
W4A5538	ONAN	**470334**!
W518	C-W	**415379**!
W518	C-W	**415379**
W518	WOOL	**415379**
W518	WOOL	**415379**!
W51811035	WOOL	**415379**
W51811035	WOOL	**415379**!
W531	WOOL	**415234**!
W53111035	WOOL	**415234**!
W563	EATON	HU009A
W72-075	W-PTS	224210
W72-076	W-PTS	226285
W72-077	W-PTS	52X72X8!
W72-078	W-PTS	1948
W72-081	W-PTS	1939
W72-082	W-PTS	1174
W72-084	W-PTS	225650
W72-089	W-PTS	225650
W72-092	W-PTS	473677
W72-094	W-PTS	4099
W72-095	W-PTS	239201
W72-096	W-PTS	224220
W72-098	W-PTS	224210
W72-107	W-PTS	1217
W72-109	W-PTS	1967
W72-110	W-PTS	1209
W72-113	W-PTS	1195
W72-114	W-PTS	1165
W72-121	W-PTS	223535
W72-122	W-PTS	223535
W72-124	W-PTS	**472213**
W72-126	W-PTS	223014
W72-129	W-PTS	1906
W72-145	W-PTS	1985
W72-147	W-PTS	**473241**
W72-148	W-PTS	**473234**!
W72-149	W-PTS	**471192**
W72-150	W-PTS	**472164**!
W72-152	W-PTS	1110
W72-155	W-PTS	**471224**!
W72-156	W-PTS	**471224**!
W72-164	W-PTS	482126
W72-165	W-PTS	**473238**!
W72-177	W-PTS	224015
W72-179	W-PTS	1960
W72-181	W-PTS	41X55X7!
W72-182	W-PTS	1959
W72-183	W-PTS	1960
W72-185	W-PTS	1956
W72-188	W-PTS	1188
W72-190	W-PTS	1183
W72-192	W-PTS	1977
W72-200	W-PTS	1950
W72-201	W-PTS	1962
W72-206	W-PTS	1974
W72-208	W-PTS	1952
W72-210	W-PTS	1192
W72-211	W-PTS	1196
W72-213	W-PTS	473823
W72-217	W-PTS	473812
W72-218	W-PTS	1999
W72-219	W-PTS	**473179**!
W72-220	W-PTS	1949
W72-221	W-PTS	1984
W72-222	W-PTS	1992
W72-224	W-PTS	1996
W72-227	W-PTS	1959
W72-228	WMG	224520
W72-230	W-PTS	48X68X10!
W72-235	W-PTS	**473238**!
W72-236	W-PTS	482126
W72-237	W-PTS	482126
W72-238	W-PTS	**473238**!
W72-242	W-PTS	2002
W72-243	W-PTS	1992
W72-244	W-PTS	1952
W72-244	WMG	1952
W72-245	W-PTS	334111
W72-247	W-PTS	**473367**
W72-248	W-PTS	494117
W72-249	W-PTS	**473367**!
W72-249	WMG	**473367**
W72-250	W-PTS	494122
W72-251	W-PTS	1939
W72-254	W-PTS	224015
W72-256	W-PTS	1943
W72-257	W-PTS	1128
W72-258	W-PTS	2003N!
W72-259	W-PTS	3677
W72-261	W-PTS	413818
W72-262	W-PTS	1906
W72-263	W-PTS	1986
W72-264	W-PTS	444116
W72-269	W-PTS	474134
W72-270	WMG	1209
W72-272	W-PTS	35X47X7
W72-273	W-PTS	1884
W72-274	W-PTS	48X62X8!
W72-278	W-PTS	**3395**!
W72-280	W-PTS	**480630**!
W72-281	W-PTS	223535
W72-283	W-PTS	1906
W72-284	W-PTS	225650
W72-285	W-PTS	225540
W72-286	W-PTS	482126
W72-287	W-PTS	224015
W72-291	W-PTS	5696
W72-293	W-PTS	1937
W72-294	W-PTS	224772
W72-296	W-PTS	226020
W72-297	W-PTS	239129
W72091	W-PTS	1216
W72091	W-PTS	1216N
W72103	W-PTS	1012
W72103	W-PTS	1012N
W72104	W-PTS	1012
W72104	W-PTS	1012N
W72106	W-PTS	224045
W72106	W-PTS	40X62X12!
W72112	W-PTS	1174
W72112	W-PTS	38X52X8.5!
W72116	W-PTS	1969
W72116	W-PTS	48X63X9!
W72117	W-PTS	1208
W72117	W-PTS	48X72X7!
W72123	W-PTS	2000
W72123	W-PTS	224235
W72123	W-PTS	42X58X7!
W72131	W-PTS	1012
W72131	W-PTS	1012N
W72132	W-PTS	224045
W72132	W-PTS	40X62X12!
W72136	W-PTS	1174
W72136	W-PTS	38X52X8.5!
W72137	W-PTS	1187
W72137	W-PTS	47X68X10!
W72140	W-PTS	1180
W72140	W-PTS	41X55X7!
W72141	W-PTS	224045
W72141	W-PTS	40X62X12!
W72144	W-PTS	**1213N**
W72146	W-PTS	224820
W72146	W-PTS	48X62X8!
W72161	W-PTS	224045
W72161	W-PTS	40X62X12!
W72166	W-PTS	**471192**
W72173	W-PTS	1181
W72173	W-PTS	41X56X7!
W72178	W-PTS	224820
W72178	W-PTS	48X62X8!
W72184	W-PTS	1955
W72184	W-PTS	52X65X9!
W72186	W-PTS	223542
W72186	W-PTS	35X55X11!
W72187	W-PTS	224045
W72187	W-PTS	40X62X12!
W72189	W-PTS	1174
W72189	W-PTS	38X52X8.5!
W72199	W-PTS	1180
W72199	W-PTS	41X55X7!
W72202	W-PTS	1973
W72202	W-PTS	48X65X10!
W72203	W-PTS	224820
W72203	W-PTS	48X62X8!
W72204	W-PTS	224270
W72204	W-PTS	42X72X10!
W72207	W-PTS	1953
W72207	W-PTS	42X60X7!
W72212	W-PTS	1955
W72212	W-PTS	52X65X9!
W72214	W-PTS	**1213N**
W72216	W-PTS	1994
W72216	W-PTS	48X70X9!
W72223	W-PTS	1012
W72223	W-PTS	1012N
W72223	W-PTS	45X62X8!
W72226	W-PTS	225020
W72226	W-PTS	50X68X8!
W72228	W-PTS	224520
W72228	W-PTS	45X60X10!
W72229	W-PTS	224835
W72229	W-PTS	48X68X10!
W72231	W-PTS	1181
W72231	W-PTS	41X56X7!
W72232	W-PTS	223542
W72232	W-PTS	35X55X11!
W72234	W-PTS	1174
W72234	W-PTS	38X52X8.5!
W72239	W-PTS	225420
W72239	W-PTS	54X72X10!
W72240	W-PTS	225230
W72240	W-PTS	52X72X8!
W72241	W-PTS	1012
W72241	W-PTS	1012N
W72241	WMG	1012
W72241	WMG	1012N
W72253	W-PTS	225005
W72253	W-PTS	50X62X7!
W72255	W-PTS	226285
W72255	W-PTS	62X85X8!
W72260	W-PTS	225110
W72260	W-PTS	51X65X7!
W72265	W-PTS	225110
W72265	W-PTS	51X65X7!
W72266	W-PTS	223605
W72266	W-PTS	36X50X7!
W72267	W-PTS	224820
W72267	W-PTS	48X62X8!
W72268	W-PTS	55X82X12!
W72270	W-PTS	225010
W72270	W-PTS	50X65X8!
W72275	W-PTS	1012
W72275	W-PTS	1012N
W72279	W-PTS	1012
W72279	W-PTS	1012N
W72279	W-PTS	45X62X8!
W72282	W-PTS	224255
W72282	W-PTS	42X65X10!
W72288	W-PTS	224820
W72288	W-PTS	48X62X8!
W72290	W-PTS	225110
W72290	W-PTS	51X65X7!
W72290	W-PTS	5695
W72292	W-PTS	223840
W72292	W-PTS	38X58X8!
W72298	W-PTS	225010
W72298	W-PTS	50X65X8!
W72299	W-PTS	710097
W794	NORDG	**473444**
W853	WOOL	**412920**!
W85311035	WOOL	**412920**!
W86611035	WOOL	**470334**!
W873	HU-WR	**472185**!
W874	HU-WR	**412119**!
W950	NORDG	**411245**!
W963	NORDG	40085S
W966	WOOL	**470334**!
WA25030	WABCO	**472572**!
WA3387	WABCO	**416339**
WA5900	WABCO	**417433**
WA5908	WABCO	**416345**!
WA5908	WABCO	455033
WA5954	WABCO	5751
WA5955	WABCO	**450084**!
WA5969	WABCO	**472164**!
WA5989	WABCO	450375!
WA5989	WABCO	6936S!
WA5989	WABCO	9845

! Industrial Size/Type
= The U.S. customer service number is 877-4-TIMKEN. The Canadian customer service numbers are 800-565-4927 (English) and 800-565-0438 (French-Canadian).

Mfr. No.	Name	Zero Duplication or Recommended Industrial
WA7052	*FORD*	410059
WA7052	*FORD*	**470380**!
WAA4676	*FORD*	6930
WAA4676B	*FORD*	6930
WAA7052A	*FORD*	410059
WAA7052A	*FORD*	**470380**!
WAA7052A1	*FORD*	410059
WAA7052A1	*FORD*	**470380**!
WAT4676A	*FORD*	6930
WAT4676A3	*FORD*	6930
WAT4676B	*FORD*	7044NA
WAT4676B1	*FORD*	7044NA
WAT4676B2	*FORD*	7044NA
WD756	*MINNM*	**474272**
WF01152	*RACIN*	**471442**!
WF01164	*RACIN*	**471472**!
WF0124	*RACIN*	**473226**
WF0145	*RACIN*	**471554**!
WF0170	*RACIN*	**474278**
WFD124	*RACIN*	**473226**
WIR361	*ROCKW*	JV1113=
WIR381	*ROCKW*	JX1990=
WIR441	*ROCKW*	J1119
WIR462	*ROCKW*	100495
WIR462	*ROCKW*	5601
WIR521	*ROCKW*	JV1122=
WJ318	*F-R-H*	**417211**!
WJ495	*F-R-H*	**455584**
WJ618	*F-R-H*	**417211**!
WK116757	*ALLCH*	**415458**!
WKM85641	*ALLCH*	**330385**!
WO-10	*ATP*	4539H
WO-9	*ATP*	3622
WO100	*EGDYN*	35094
WO25598	*SKF*	25598
WO8278	*ROL*	35316
WO8285	*ROL*	35292
WO8292	*ROL*	35315
WO8307	*ROL*	427
WO8307	*ROL*	427RR
WO8318	*ROL*	35410
WO8321	*ROL*	35402
WO8327	*ROL*	35394
WO8338	*ROL*	35094
WO8343	*ROL*	35524
WO8348	*ROL*	35486
WO8383	*ROL*	35524
WO8395	*ROL*	35526
WO8396	*ROL*	35361
WO8402	*ROL*	35531
WO8404	*ROL*	25598
WO93801	*HERCU*	J1128
WO97801	*HERCU*	J1134
WP035	*EGDYN*	35224
WP153151	*ALLCH*	**414268**=
WP17733	*ALLCH*	**473228**!
WP9493	*ROL*	35418
WR11063	*GWI*	**415995**!
WR11064	*GWI*	**417541**
WR11141	*GWI*	**473245**!
WR11582	*GWI*	**474281**!
WR14310	*GWI*	**416888**!
WR15090	*GWI*	**472924**!
WR16607	*GWI*	**417538**
WR254	*CEW*	224045
WR254	*CEW*	40X62X12!
WR309	*CEW*	224235
WR309	*CEW*	42X58X7!
WR398	*CEW*	1174
WR398	*CEW*	38X52X8.5!
WR546	*CEW*	228010
WR9046	*GWI*	**417211**!
WR9255	*GWI*	**417355**!
WR9839	*GWI*	**415196**!
WRF1115	*AU-WS*	5965
WRF1115A	*B-L-H*	5965
WRF1115A	*CLARK*	5965
WS238A32	*FORD*	**471652**
WS238A32	*FORD*	482208!
WVR23	*DEVIL*	**471538**!
WX13136	*ALLCH*	40370S
WX916	*GMC*	240385
WY31912-105	*LK-BT*	**472016**
WY31912-109	*LK-BT*	**473245**!
WY31912-129	*LK-BT*	**415449**!
WY31912-145	*LK-BT*	**417316**!
WY31912-25	*LK-BT*	**471570**!
WY31912-41	*LK-BT*	**476838**!
WY31912-49	*LK-BT*	**471766**!
WY31912-81	*LK-BT*	**472185**!
WY319121	*LK-BT*	50199S!
WY319121	*LK-BT*	6863S!
WY3191257	*LK-BT*	**471192**
WZ2731	*WABCO*	**412725**
X-13-T536	*IG-RA*	**470774**!
X-301-SL799	*B-L-H*	**472492**!
X-301-SN799	*B-L-H*	**470380**!
X-301-SP799	*B-L-H*	**415138**!
X-602-23715	*REX*	470950!
X-602-23715	*REX*	6241S
X-A445FHA	*CASE*	**472560N**!
X0120L200	*CONTI*	**450446**
X0120L210	*CONTI*	**415389**
X0373170	*IH*	**415962**
X0E9	*WHITE*	**473454**
X1015992	*DURA*	**473313**!
X10693	*REX*	**455008**
X10736	*AMC*	**473367**!
X10736	*AMC*	**473367**
X108	*ULRIC*	**410694**!
X109444A	*BOSTN*	**471255**!
X10955	*BRAD*	**470380**!
X11144	*PARGN*	**473446**
X115	*HOUGH*	**472394**
X11518	*PARGN*	**416664**!
X1160122	*ALLCH*	**416135**!
X1160216	*ALLCH*	416556!
X1160216	*ALLCH*	**472157**
X1160246	*ALLCH*	415137!
X1160246	*ALLCH*	**418028**
X1160303	*ALLCH*	**470954**!
X1162562	*ALLCH*	**472164**!
X1162682	*ALLCH*	**472572**!
X1162694	*ALLCH*	**472397**!
X1162717	*FUNK*	**416154**!
X11791	*PARGN*	**473224**!
X118	*ULRIC*	**472185**!
X11872	*BRAD*	**473231**!
X12127	*PARGN*	**473010**!
X1220	*IG-RA*	**476470**
X12433	*BRAD*	**472164**!
X125514	*LEROI*	**480630**!
X13176	*PARGN*	**472258**
X13177	*PARGN*	**415449**=
X1318939	*GMC*	**472164**!
X1334284	*GMC*	**472179**
X13444	*BOSTN*	350909
X13444	*BOSTN*	**471224**!
X1380974	*GMC*	**473179**!
X13C207	*CONTI*	**471466**!
X13T-2A	*IG-RA*	**472397**!
X13T296	*IG-RA*	**450593**!
X14231	*BRAD*	**471466**!
X143620	*FORD*	**482253**
X143621	*FORD*	**474255**
X143626	*FORD*	**472012**
X1507	*CONTI*	**471137**
X1512	*CONTI*	450269
X1518	*CONTI*	**473467**!
X1519	*CONTI*	**450446**
X152	*ULRIC*	**472015**!
X1520	*CONTI*	408
X1527	*CONTI*	**412119**
X15299A	*CASE*	**450984**
X153	*ULRIC*	**473367**!
X153	*ULRIC*	**473367**
X1553	*CONTI*	**474272**!
X1555	*CONTI*	**473467**!
X1607024	*GMC*	8871
X169759	*US-EL*	**471076**
X170185	*FORD*	**471224**
X17036	*AMC*	**473367**!
X17036	*AMC*	**473367**
X17604	*US-EL*	**450039**
X176888	*US-EL*	**471272**!
X178187	*GMC*	240119
X17909	*GMC*	**471554**!
X179175	*CUMMI*	J1134
X17937A	*VICK*	340823
X20264143	*REX*	**472397**!
X202648143	*REX*	**472397**!
X203536	*REX*	**473232**
X20385941	*REX*	**472394**
X20433	*BOSTN*	340771
X20779	*FORD*	2443
X211111	*US-EL*	**450400**
X212176	*US-EL*	**415302**
X21230	*GMC*	**418028**
X21230	*GMC*	455137!
X21238	*GMC*	**415937**!
X220073	*US-EL*	**415991**
X220073	*US-EL*	**415991**!
X220074	*US-EL*	**416380**!
X220734	*FORD*	**471763**
X220903	*US-EL*	**473016**!
X221327	*US-EL*	**471821**!
X221444	*BOSTN*	**471549**!
X221444	*BOSTN*	472467
X22270	*ALLCH*	**472636**!
X223770	*US-EL*	**416288**!
X225818	*US-EL*	**415988**
X22658	*MYERS*	**455280**
X22793	*ALLCH*	**471689**!
X22949	*ALLCH*	**472179**
X22950	*ALLCH*	**471138**!
X230926	*US-EL*	**415449**!
X231444101	*BOSTN*	**471684**!
X232829	*US-EL*	**417171**!
X236	*HOUGH*	450275
X237	*HOUGH*	470950!
X237	*HOUGH*	6241S
X25215	*IH*	**416865**!
X262339	*US-EL*	**415034**!
X2671	*COC*	**472560N**!
X2672	*COC*	**471820**
X2711	*KOHL*	**330385**!
X27110	*KOHL*	**471646**!
X27113	*KOHL*	**474276**!
X27114	*KOHL*	**472572**!
X27116	*KOHL*	240215
X27117	*KOHL*	340815
X27118	*KOHL*	**471341**!
X2712	*KOHL*	**472287**!
X27124	*KOHL*	**450065**
X2713	*KOHL*	**470088**
X2714	*KOHL*	**471466**!
X2716	*KOHL*	**471567**!
X2719	*KOHL*	450398
X2719	*KOHL*	**471267**!
X275	*CUSH*	**471643**!
X28	*GEHL*	**472015**!
X28473	*FMC*	5865
X285525	*US-EL*	**417181**!
X28A2122	*DALMO*	240716
X3010	*FUNK*	**472029**
X301SP799	*CLARK*	**415138**!
X32142	*FMC*	**415984**!
X332433102	*BOSTN*	**473010**!
X332672	*WHITE*	**473367**!
X351A	*CHERY*	**417967**!
X352A	*CHERY*	**416107**!
X352A	*CHERY*	455073
X353986	*US-EL*	200642
X363	*HOUGH*	**455019**!
X377	*HOUGH*	**472144**!
X3796	*KOHL*	**470380**!
X3799	*KOHL*	3120N=
X38444A	*BOSTN*	**450593**!
X407279	*WHITE*	**415007**
X407346	*WHITE*	**410308**!
X407363	*WHITE*	**410694**!
X407776	*WHITE*	**474279N**
X413644	*WHITE*	55155=
X419339	*WHITE*	**417556**
X420538	*WHITE*	**415645**!
X420538	*WHITE*	455104
X425651	*WHITE*	**412119**
X425746	*WHITE*	**473010**!
X425747	*WHITE*	**472185**!
X425748	*WHITE*	**417316**!
X430339	*WHITE*	**416153**!
X43482A	*VICK*	**471192**
X445016	*WHITE*	340823
X448	*HOUGH*	**417596**
X452064	*WHITE*	**480630**
X46248	*GMC*	**471763**
X46249	*GMC*	**412473**!
X4788	*COC*	204035
X49063	*COC*	50514
X495045	*WHITE*	**470004**!
X500117401	*WHITE*	415185H=
X50058	*GMC*	350156
X50058	*GMC*	**473096**
X50734	*BENDI*	340771
X50743	*BENDI*	240319
X50799	*ALLCH*	**416364**!
X508175	*US-EL*	**473445**
X514308	*US-EL*	**472164**!
X52089	*BENDI*	**472560N**!
X52167	*BENDI*	**471267**!
X5229	*JOHND*	**472287**!
X52444A	*BOSTN*	**471750**!
X53616	*GMC*	**413246**
X5393	*CONTI*	**472492**!
X5397	*CONTI*	**411245**!
X5414	*HU-WR*	**470954**
X5415	*BU-SP*	240385
X545	*CASE*	**471466**!
X549	*CASE*	**471442**!
X551469	*US-EL*	**472144**!
X55311	*GMC*	**474276**!
X556927	*US-EL*	**415259**!
X558070	*US-EL*	**472179**
X560324	*US-EL*	450457
X563000	*US-EL*	**471766**!
X565043	*US-EL*	450275
X569684	*US-EL*	**472185**!
X5704	*REX*	**415960**!

! Industrial Size/Type

= The U.S. customer service number is 877-4-TIMKEN. The Canadian customer service numbers are 800-565-4927 (English) and 800-565-0438 (French-Canadian).

Mfr. No.	Name	Zero Duplication or Recommended Industrial
X5705	REX	472012
X573769	US-EL	473232
X5764	REX	415995!
X5833	KOHL	471413!
X583335	US-EL	473232!
X5834	KOHL	473215!
X5964	REX	472015!
X602	REX	470950!
X602	REX	6241S
X6082	PETTI	473245!
X6114	REX	415035
X6114	REX	415035!
X6115	REX	476470
X61397	US-EL	412943
X6160	REX	417357
X6160	REX	455192!
X6176	REX	413469!
X61794	US-EL	471648
X6205	REX	473457!
X6209	REX	471689!
X6221	REX	470059
X6221	REX	470380!
X628809	WHITE	471737
X6294	REX	415371
X630	REX	472924!
X6329	REX	415937!
X6335	REX	480210!
X6336	REX	471224!
X6349	REX	416107!
X6349	REX	455073
X6353	REX	411245!
X6363	REX	416654!
X6364	REX	473214!
X637	REX	473211!
X638090	WHITE	472258
X6382	REX	416153!
X6387	REX	473243
X6389	REX	473225!
X6392	REX	411394!
X64030	SPICE	471442!
X6486A	VICK	418028
X6486A	VICK	455137!
X650638	US-EL	473459
X650841	US-EL	471570!
X654335	US-EL	471424!
X6549	REX	412119!
X658057	US-EL	481397
X6586	REX	474274
X658621	IH	416130!
X65862231	IH	412943
X658623	IH	472164!
X661762	US-EL	471570!
X662697	EL-MO	471821!
X662697	US-EL	471821!
X664295	US-EL	473244!
X665395	US-EL	416267!
X6744	REX	416167!
X6767	REX	415001!
X6811	REX	417621!
X6872	REX	472016
X6879	REX	473229
X6931	REX	417492
X6995	REX	473234
X708819	AVCO	451143
X7100	REX	472144!
X7117	REX	456105
X72202A	VICK	240385
X72203A	VICK	240027=
X729120	US-EL	471391!
X730082	US-EL	470605!
X730093	US-EL	470898
X730624	US-EL	417433!
X730625	US-EL	415483
X73083	US-EL	450400
X7517	REX	471689!
X7564	REX	417546!
X7610	REX	455249!
X7723	REX	205035
X7810	CONTI	473467!
X7812	CONTI	474272!
X7852	REX	417191
X7852	REX	456585
X7874	REX	40067S=
X78970	US-EL	471267!
X7903	REX	472439
X8006	REX	450467
X8057	REX	412871!
X8089	REX	472179
X82025	US-EL	450039
X8208	REX	415254
X8209	REX	474256
X8210	REX	472924!
X84534	US-EL	415302
X84570	DALMO	450457
X84570	US-EL	450457
X84571	US-EL	472164!
X84573	US-EL	472179
X89048	US-EL	471821!
X89204	US-EL	471192
X8948	KEWNE	204027
X8C1190	FORD	472179
X8N4233	FORD	471868
X9102126	CHRYS	1198
X96863	GMC	3893V!
X96863	GMC	415379=
X96863	GMC	415379!
X97421	VICK	482126
XA077029AA	JOHND	417484!
XA1024	PREST	471554!
XA1104	PREST	471354!
XA11248	CASE	417316!
XA11339	CASE	410308!
XA11747	CASE	473226
XA1176	OLIVE	416271!
XA12384	GMC	471442!
XA12523	CASE	415035!
XA12523	CASE	415035
XA129585	CASE	416267!
XA130146	CASE	415027
XA132694	CASE	417509
XA13379	HWY	417494
XA13640	CASE	473475
XA138225	CASE	413470!
XA14848	CASE	415138!
XA1487	PREST	240470
XA152753	GMC	350909
XA152753	GMC	471224!
XA153325	CASE	416404!
XA154253	CASE	471424!
XA156617	CASE	471272!
XA15678	CASE	471835!
XA15683	CASE	473227
XA15684	CASE	472179
XA15692	CASE	417181!
XA157228	CASE	476808=
XA15769	CASE	415379
XA15821	CASE	472164!
XA158371	CASE	471424!
XA16138	CASE	471341!
XA17037	CASE	455566
XA17416	CASE	415458!
XA18156	CASE	456105
XA18547	CASE	471579
XA18793	CASE	42352S
XA18799	CASE	472636!
XA18809	CASE	411376!
XA19064	CASE	415449!
XA19644	GMC	471538!
XA20732	CASE	415458!
XA20964	CASE	473197
XA21243	CASE	472164!
XA21672	CASE	418028
XA21672	CASE	455137!
XA21673	CASE	418028
XA21673	CASE	455137!
XA23602	CASE	471504!
XA24140	CASE	415036
XA24142	CASE	415036
XA24683	GMC	472439
XA249A	BR-WN	471141
XA26033	CASE	472015!
XA26425	CASE	471649!
XA29463	CASE	471271!
XA31465	CASE	415984!
XA40865	CASE	470898
XA41888	CASE	J1103
XA43515	CASE	415137!
XA43515	CASE	418028
XA43517	CASE	417499
XA43518	CASE	J1125
XA43816	CASE	413247!
XA43817	CASE	415984!
XA45392	CASE	471413!
XA5089129	IH	412027
XA5539159	IH	472924!
XA5539278	IH	472299
XA5580144	IH	415449!
XA558092	IH	415379!
XA558092	IH	415379
XA597	AU-LI	471442!
XA652	AU-LI	471766!
XA654	AU-LI	351487
XA654436	US-EL	473197
XA694	AU-LI	471762!
XA710	AU-LI	471224
XA717	AU-LI	471224!
XA721	AU-LI	471571
XA74217	CASE	416107!
XA7667A135	LEECE	471633=
XA78731	ALLCH	471271!
XA813	AU-LI	471231!
XA876	AU-LI	330385!
XA91793	CASE	415294!
XA91831	CASE	471442!
XA92050	CASE	415937!
XA92072	CASE	473237!
XA98870	CASE	417123=
XA99254	CASE	415449!
XAA13269	JOHND	471224!
XAA13269A	JOHND	471224!
XAA15602	JOHND	450129
XAA15602	JOHND	472826!
XAA17322	JOHND	470898
XAA18248	JOHND	472560N!
XAA19918	JOHND	471554!
XAA20808	FORD	2503
XAA20808	FORD	2503N
XAA21065	FORD	2551
XAA21693	JOHND	471271!
XAA22407	JOHND	415035!
XAA22407	JOHND	415035
XAA2375	JOHND	470954!
XAA2973	FORD	471652
XAA33187	JOHND	474276!
XAA743	FORD	240414
XAA9322	FORD	472070
XAB12038	JOHND	330385!
XAB22514	JOHND	410496!
XAF22204	JOHND	415035
XAF22204	JOHND	415035!
XAG10583	JOHND	472258
XAG15542	JOHND	471224!
XAG15991	JOHND	480630!
XAG17458	JOHND	471442!
XAG18773	JOHND	471272!
XAG18773A	JOHND	471341!
XAG18811	JOHND	323138!
XAG21328A	JOHND	474276!
XAH91356	JOHND	473197
XAK2019A	JOHND	474278
XAK2027	JOHND	471231!
XAO16492	JOHND	473241
XAO16784	JOHND	472560N!
XAO5188	JOHND	472179
XAO5258	JOHND	473227
XAO75773AA	JOHND	470898=
XAO77079A	JOHND	417484!
XAO77631AA	JOHND	471271!
XAO7991A	JOHND	471264
XAO7991B	JOHND	471466
XAO7992A	JOHND	470954
XAR15155	JOHND	472164!
XAR28635	JOHND	340356
XAR33144	JOHND	450400
XARE110	JOHND	450474
XARE3342	JOHND	470954!
XARE4222	JOHND	450084!
XARE481	JOHND	417181!
XAW8070B	JOHND	472705!
XAW8293A	JOHND	471442!
XAY4734	JOHND	471766!
XB6442	CASE	473380
XB90050	COC	471192
XC12933	MID-R	471224!
XC12962	MID-R	471224!
XC135639	SCHWI	417484!
XC138211	SCHWI	472636!
XC330598	FORD	471271!
XC376	BL-KN	471466!
XC96755	C-P	470774!
XE13250E	JOHND	471841
XE17609E	JOHND	416339
XE177	OLIVE	472951
XE177	OLIVE	474252
XE3TW11772	FORD	8835S
XE82354	FORD	471689!
XED8906	EATON	471267!
XER90620	EATON	470898
XER90654	EATON	473459
XER90703	EATON	471532
XER90724	EATON	473228
XER91444	EATON	350936
XER9213	ALLCH	472705!
XET95343	EATON	413246
XET95349	EATON	471224!
XF52-6700AA	FORD	224052
XF5Z-6700AA	FORD	224052
XFS2S	CASE	473473
XG167	OLIVE	471766!
XG168	OLIVE	473214!
XG2811	JOHND	473227
XG328	OLIVE	471765!
XH11726	FORD	471763
XH125254	LEROI	474272
XH139	OLIVE	472397!
XH1530433	BOSTN	472924!
XJ215S	CASE	472560N!
XL205	OLIVE	472016

! Industrial Size/Type
= The U.S. customer service number is 877-4-TIMKEN. The Canadian customer service numbers are 800-565-4927 (English) and 800-565-0438 (French-Canadian).

Mfr. No.	Name	Zero Duplication or Recommended Industrial
XL34-7052AA	*FORD*	223012
XL3P-7052-AA	*FORD*	100189
XL484	*OLIVE*	**471138**!
XL76370	*NEWVR*	3459
XLB444	*BOSTN*	351028
XLD51181	*MARMO*	**472179**
XM1524	*CASE*	**471354**!
XM336725	*FORD*	**473234**!
XM507674	*FORD*	**472299**
XN300531	*FORD*	**472492**!
XN305440	*FORD*	**471820**
XN307035	*FORD*	**472164**!
XN307049	*LEROI*	**472287**!
XN322499	*FORD*	**450911N**!
XN337312	*FORD*	**473234**!
XN606422	*FORD*	**473228**!
XN608008	*FORD*	200642
XN609020	*FORD*	**415027**
XN609020	*FORD*	**415027**!
XN610356	*FORD*	455625=
XN610357	*FORD*	**455396**
XO16817	*JOHND*	**471341**!
XO37818	*JOHND*	**450188**
XOS175	*BOSTN*	476820
XOS212	*BOSTN*	476808=
XOS400	*BOSTN*	476816=
XP32496	*FORD*	**331107N**
XP34777	*FORD*	**331107N**
XP67266	*FORD*	7692S
XP67267	*FORD*	7300S
XP76539	*FORD*	**473473**
XPG-F4922	*AU-WS*	**472409**
XPGF16067	*AU-WS*	**415995**!
XR12370	*CASE*	**473231**
XR3102	*FORD*	410059
XR3102	*FORD*	**470380**!
XR7221	*OLIVE*	J1119
XR7221	*WHITE*	J1119
XR737	*OLIVE*	340356
XS120398	*CASE*	**416167**!
XSP8600A	*CASE*	**470088**
XSP8714	*CASE*	**413247**!
XT15166	*C-W*	**415483**!
XT154119	*C-W*	**416229**
XT60694	*FORD*	7442H
XT67101	*GMC*	**471692**!
XT7584	*GMC*	6936S
XU171444B	*BOSTN*	**471224**!
XVP2099	*LETN*	J1106
XVR1035	*ESSIC*	**415991**
XVR1035	*ESSIC*	455146!
XVWSF27433	*BOSTN*	**470954**!
XW15754	*FORD*	9569S
XW1652	*FORD*	6930
XW19076	*FORD*	**473228**
XW19835	*FORD*	9363S
XW20317	*FORD*	51322
XW20318	*FORD*	9161
XW21807	*FORD*	9568
XW21911	*FORD*	9569S
XW2365	*CASE*	240736
XW24525	*FORD*	**473228**
XW26444101	*BOSTN*	**470625**!
XW26444102	*BOSTN*	**472185**!
XW4Z6700AA	*FORD*	**473454**
XW70063A	*JOHND*	240735
XW8069	*FORD*	7044NA
XW8454	*FORD*	9568
XW8455	*FORD*	7044NA
XW8456	*FORD*	**472070**
XW8582	*FORD*	8168=
XX1634135	*CATER*	**417171**!
XY41050	*JOHND*	470950!
XY41050	*JOHND*	6241S
Y14280	*WAUKE*	40185
Y143218	*GA-WO*	**417351**!
Y14479	*WAUKE*	50199S!
Y14479	*WAUKE*	6863S!
Y205176	*CUMMI*	**470898**
Y209810	*CUMMI*	**471413**!
Y324151RX	*SPG*	324151=
Y344725	*IG-RA*	**470565**!
Y381653	*WHITE*	**415995**!
Y383784	*IG-RA*	**415725**!
Y400B-225	*CONTI*	**470334**!
Y400K3330	*CONTI*	BS1280
Y4170	*GRAY*	**471766**!
Y4323	*GRAY*	450398
Y4323	*GRAY*	**471267**!
Y5045	*WAUKE*	**470334**!
Y5229	*JOHND*	**472287**!
Y6569	*WAUKE*	**472015**!
Y6572	*WAUKE*	**474265**
Y66379	*WHITE*	370006A
Y714599	*WHITE*	**417484**!
Y714702	*WHITE*	**415138**!
Y717703	*WHITE*	**476470**!
Y717703	*WHITE*	**476470**
Y717754	*WHITE*	5M497
Y825170	*WHITE*	**472179**
Y827376	*WHITE*	**412871**!
Y827377	*WHITE*	**416921**!
Y904016	*EL-PA*	**417621**!
Y91L202	*CONTI*	**472924**!
YF630	*F-R-H*	**417354**!
YL24-3N296AA	*FORD*	714675
YL2Z-4L616AA	*FORD*	714675
YL2Z-4L616AB	*FORD*	714675
YL84-7052AA	*FORD*	1990
YL8P7H260AA	*FORD*	481191V
YL8W-7H426-AA1	*FORD*	3604
YL8W-7H426-AA1	*FORD*	4846
YL8W-7H429-AA1	*FORD*	471113V
YL8W-7H469-CA	*FORD*	100566
YL8Z1177AA	*FORD*	481191V
YS0500	*NATSU*	**471442**!
YS0750	*NATSU*	**471554**!
YS10002	*NATSU*	**417020**
YS1500	*NATSU*	470059
YS1500	*NATSU*	**470380**!
YS1503	*NATSU*	**474281**!
YS1560	*NATSU*	**473229**
YS1561	*NATSU*	**473229**
YS1562	*NATSU*	**473229**
YS1590	*NATSU*	**482253**
YS1753	*NATSU*	**472185**!
YS1871	*NATSU*	**473238**
YS1872	*ARMCO*	**472572**!
YS1872	*NATSU*	**472572**!
YS2000	*NATSU*	**470530**!
YS2004	*NATSU*	**473242**
YS2502	*NATSU*	**415449**!
YS3252	*ARMCO*	**476470**
YS3252	*NATSU*	**476470**
YS3340	*NATSU*	**412473**!
YS3501	*NATSU*	**415027**
YS3501	*NATSU*	**415027**!
YS4000	*NATSU*	**415035**
YS4000	*NATSU*	**415035**!
YS4255	*NATSU*	**416149**
YS4500	*NATSU*	**416888**!
YS4501	*NATSU*	**416892**!
YS4503	*NATSU*	**416154**!
YS4620	*NATSU*	**415371**
YS4751	*NATSU*	**415138**!
YS5120	*NATSU*	455071N*=
YS5872	*NATSU*	**455297**
YS6870	*NATSU*	**455584**
YS6886	*NATSU*	**472185**!
YS7622	*NATSU*	**417598**
YT156	*MINNM*	**481864**
YT330	*MINNM*	**473215**!
YX133	*GRAY*	**476838**!
Z10260	*EATON*	**415023**
Z1026AC	*EATON*	**416339**
Z1026AC	*EATON*	455031!
Z1026AD	*EATON*	**474273**
Z1026AF	*EATON*	**412871**!
Z1026AH	*EATON*	**417262**!
Z1026B	*EATON*	**471137**
Z1026BA	*EATON*	**472157**!
Z1026BA	*EATON*	**472157**
Z1026BD	*EATON*	**473214**!
Z1026C	*EATON*	**450593**!
Z1026D	*EATON*	**476838**!
Z1026E	*EATON*	**471750**!
Z1026F	*EATON*	**473215**!
Z1026G	*EATON*	470059
Z1026G	*EATON*	**470380**!
Z1026H	*EATON*	**473367**!
Z1026H	*EATON*	**473367**
Z1026I	*EATON*	**470334**!
Z1026J	*EATON*	**450084**!
Z1026K	*EATON*	**470530**!
Z1026L	*EATON*	**415001**!
Z1026M	*EATON*	**415960**!
Z1026N	*EATON*	**415995**!
Z1026O	*EATON*	**415023**
Z1026P	*EATON*	**415025**
Z1026Q	*EATON*	**415027**!
Z1026Q	*EATON*	**415027**
Z1026R	*EATON*	**416345**!
Z1026R	*EATON*	455033
Z1026S	*EATON*	**415035**!
Z1026T	*EATON*	**415058**
Z1026U	*EATON*	**415351**!
Z1026V	*EATON*	**416107**!
Z1026V	*EATON*	455073
Z1026W	*EATON*	**417562**
Z1026X	*EATON*	**415035**
Z1026X	*EATON*	**415035**!
Z1089AA	*EATON*	**417262**!
Z1089B	*EATON*	**473214**=
Z1089C	*EATON*	450059V=
Z1089D	*EATON*	**473232**=
Z1089E	*EATON*	**470334**=
Z1089F	*EATON*	**472439**=
Z1089G	*EATON*	**470898**=
Z1089K	*EATON*	**417349**=
Z1089L	*EATON*	**455566**=
Z1089M	*EATON*	455146V=
Z1089N	*EATON*	**472157**=
Z1089P	*EATON*	**415725**=
Z1089R	*EATON*	**471137**
Z1089S	*EATON*	**450593**!
Z1089T	*EATON*	**473367**!
Z1089T	*EATON*	**473367**
Z1089V	*EATON*	**470530**=
Z1089Y	*EATON*	**415034**=
Z10909	*GMC*	**455480**!
Z120S201	*CONTI*	50199S!
Z120S201	*CONTI*	6863S!
Z17036B	*OLIVE*	40061S=
Z224	*COC*	**416271**!
Z268	*COC*	**415995**!
Z273	*COC*	**417621**!
Z273	*WHITE*	**417621**!
Z289	*COC*	365008
Z289	*WHITE*	365008
Z29154	*ALLCH*	**415458**!
Z310	*COC*	450869
Z320	*COC*	**473197**
Z320	*WHITE*	**473197**
Z33-S443003950	*FAIRB*	470950!
Z33-S443003950	*FAIRB*	6241S
Z33-S443015310	*FAIRB*	**415138**!
Z33-S443173945	*FAIRB*	470950!
Z33-S443173945	*FAIRB*	6241S
Z403	*COC*	**412861**
Z414	*COC*	**471224**!
Z414	*WHITE*	**471224**!
Z4405VX	*SPG*	4405V
Z525	*COC*	**417344**!
Z535	*COC*	**470774**!
Z536	*COC*	**415458**!
Z540	*COC*	450269
Z550	*WHITE*	6575S
Z576	*COC*	**473444**
Z599	*COC*	**470625**!
Z599	*WHITE*	**470625**!
Z606	*COC*	**473313**
Z6067	*OLIVE*	**476838**!
Z6068	*OLIVE*	**471766**!
Z6205	*OLIVE*	**473016**!
Z6206	*OLIVE*	**471192**
Z6572	*JOHND*	**476838**!
Z6572H	*JOHND*	**476838**!
Z6573	*JOHND*	**471750**!
Z668	*COC*	340724!
Z668	*WHITE*	340724!
Z6855	*OLIVE*	**471689**
Z7151	*JOHND*	**411253**!
Z7151H	*JOHND*	**411253**!
Z834270	*EL-PA*	**473458**!
Z835639	*EL-PA*	**471750**!
Z902417	*EL-PA*	**417316**!
Z90343	*EL-PA*	**472924**!
Z9332A	*GMC*	**474278**
Z9342A	*GMC*	**471466**!
ZNL749	*DURA*	**473214**!
ZNL750	*DURA*	**473236**!
ZZM0-33-067	*FORD*	8312
%428454C91	*IH*	370003A
00014002456	*LF-PT*	**470898**
00014002695	*LF-PT*	**415449**!
00014003254	*LF-PT*	**415196**!
00014012850	*LF-PT*	485725N
00029141	*SPERY*	**474278**
0003207340	*RENAU*	713152
0006116	*HYST*	**415645**!
0006570	*HYST*	**415035**
0006570	*HYST*	**415035**!
0007959	*HYST*	**415351**!
0008329	*HYST*	**470530**!
0008638	*HYST*	**471567**!
0008639	*HYST*	**471570**!
0008741	*HYST*	**470380**!
0008748	*HYST*	**471264**!
0009141	*HYST*	**450084**!
00092BGOE	*SABO*	**414045**
000931634	*AMC*	**471504**
000935612	*AMC*	8676S
000939335	*AMC*	**410308**!
0009971446	*MERCE*	110X140X13!
0009971446	*MERCE*	231108
0009971546	*MERCE*	223800
0009971746	*MERCE*	1174
0009971746	*MERCE*	38X52X8.5!

! Industrial Size/Type * Minor Width Difference

= The U.S. customer service number is 877-4-TIMKEN. The Canadian customer service numbers are 800-565-4927 (English) and 800-565-0438 (French-Canadian).

Mfr. No.	Name	Zero Duplication or Recommended Industrial
0009972747	*MERCE*	222030
0009972847	*MERCE*	224045
0009972847	*MERCE*	40X62X12!
0009973446	*MERCE*	229520
0009973446	*MERCE*	95X130X12!
0009974346	*MERCE*	222510
0009974646	*MERCE*	110X140X13!
0009974646	*MERCE*	231108
0009977446	*MERCE*	110X140X13!
0009977446	*MERCE*	231108
001-301-227	*VW*	2027
001-301-227C	*AUDI*	2027
001-301-227C	*VW*	2027
00100412	*SPERY*	200354
001143040	*LF-PT*	**415498**
00115950	*SPERY*	204035
001258120	*LF-PT*	7512SSO*
0014015	*HYST*	340356
00144539	*LF-PT*	5401
002-997-9646	*MERCE*	239135
00200196	*ALLCH*	**473367**!
0021051	*HYST*	**471763**
00211700	*AJUSA*	1172
0021828	*HYST*	**470088**
0021870	*HYST*	450147
00220500	*AJUSA*	229210
00224955	*ALLCH*	240414
00231000	*AJUSA*	229210
00241485-03	*ALLCH*	451350*=
0024410015	*RENAU*	221540
0024410122	*RENAU*	222240
0024411383	*RENAU*	223831
0024411453	*RENAU*	1012
0024411453	*RENAU*	1012N
0024676	*HYST*	**470605**!
00248348	*SPERY*	**415303**!
0025-5620SS	*JN-MN*	343104
0025-7037SS	*JN-MN*	**350435**
0026186	*HYST*	**471820**
0026640	*HYST*	**450143**
0027260	*HYST*	**470712**!
0027531	*HYST*	**471442**!
00289290	*SPERY*	**481163**!
0029117	*HYST*	**450040**
0029308	*HYST*	**410987**!
0029760	*HYST*	**415082**
0029971346	*MERCE*	223610
0029971346	*MERCE*	710197!
003-507-264C	*VW*	224520
003-507269A	*VW*	224520
003-519-089A	*VW*	3051N
003-519-089D	*VW*	3051N
003-992-9546	*MERCE*	239133
00302B	*SABO*	1012N*
00302B	*SABO*	224662*
0031-6269SS	*JN-MN*	50883=
0031-7016SS	*JN-MN*	**350364**
0031234	*HYST*	**410102**
0031235	*HYST*	**412920**!
0031508	*HYST*	**417538**
0031960	*HYST*	**471821**!
0031970	*HYST*	**415991**
0031970	*HYST*	455146!
0032166	*HYST*	**416239**!
0032205	*HYST*	**472012**
0032875	*HYST*	**412040**
0032969	*HYST*	**415371**
0034539	*HYST*	**416158**
0034820	*HYST*	**415007**
0035001181	*LF-PT*	8636=
003507125A	*VW*	221040
0035608	*HYST*	**415984**!
0035828	*HYST*	**416654**!
0036352	*HYST*	**415219**
0037-5270SS	*JN-MN*	**471103**!
0037-6362SS	*JN-MN*	**330385**!
0037103	*HYST*	**416476**!
00376764	*ALLCH*	**472924**!
003964BXR	*SPG*	1969
003964BXR	*SPG*	48X63X9!
0039970347	*MERCE*	710289
0039975146	*MERCE*	110X140X13!
0039975146	*MERCE*	231108
0039978147	*MERCE*	20X42X7
00400053	*SEAMA*	55367=
0041454	*HYST*	**415074**
0041455	*HYST*	**417172**
0041733	*HYST*	**416364**!
0041738	*HYST*	**413478**
0042875	*HYST*	455308
0043-14657SS	*JN-MN*	**472810**!
004316426SS	*JN-MN*	50199S!
004316426SS	*JN-MN*	6863S!
004316769SS	*JN-MN*	50199S!
004316769SS	*JN-MN*	6863S!
00435701	*ALLCH*	**450273**
0044454	*HYST*	**417474**
0044456	*HYST*	351487
0044459	*HYST*	**417205**!
0044461	*HYST*	**417254**
0044472	*HYST*	**416282**
0044476	*HYST*	345448
0044478	*HYST*	**455079**!
0044479	*HYST*	**416664**!
0044483	*HYST*	240736
0044484	*HYST*	**416154**!
0044490	*HYST*	**415023**
0044493	*HYST*	455375=
0044495	*HYST*	**472144**!
0044500	*HYST*	40520S
0044503	*HYST*	**472164**!
0044504	*HYST*	455509
0044508	*HYST*	365008*
0044515	*HYST*	**451948**
0044517	*HYST*	240735
0044522	*HYST*	**415551**
0044523	*HYST*	**472150**
0044525	*HYST*	**415072**
0044526	*HYST*	**416865**!
0044527	*HYST*	**417601**
0044528	*HYST*	**415482**
004453	*HYST*	**417562**
0044530	*HYST*	**415302**
0044531	*HYST*	240733
0044532	*HYST*	240731
0044536	*HYST*	416775
0044540	*HYST*	**411330**!
0044547	*HYST*	**417507**
0044547	*HYST*	**417507**!
0044548	*HYST*	**415027**
0044552	*HYST*	**411253**!
0044554	*HYST*	**471633**!
0044559	*HYST*	**410737**!
0044560	*HYST*	**417298**
0044561	*HYST*	**417501**
0044562	*HYST*	**474272**!
0044563	*HYST*	**415960**!
0044565	*HYST*	**416077**
0044566	*HYST*	**470625**!
0044568	*HYST*	**470565**!
0044570	*HYST*	**416666**
0045587	*HYST*	**471354**!
0045729	*HYST*	**455280**
0046-15026SS	*JN-MN*	50200
0046671	*HYST*	**416380**!
0046697	*HYST*	**471413**!
0046831	*HYST*	**415350**
0047479	*HYST*	**417357**
00480BA	*SABO*	82X105X13
0048549	*HYST*	**471192**
00487033	*ALLCH*	**415449**!
00487207	*ALLCH*	**471785**!
00488BRG	*SABO*	224255
0049541	*HYST*	**471750**!
005-997-7846	*MERCE*	1996
0050-11124SS	*JN-MN*	340847
0050-12038LUP	*JN-MN*	**471526**!
0050-12244SS	*JN-MN*	342613!
0050-13163LPD	*JN-MN*	**471526**!
0050-13448LUP	*JN-MN*	**471472**!
0050-13778SS	*JN-MN*	**471442**!
0050-14806LUP	*JN-MN*	**471442**!
0050-4810SS	*JN-MN*	**471442**!*
0050-5883SS	*JN-MN*	**471526**!
0050-8855SS	*JN-MN*	**471549**!
0050-9212SS	*JN-MN*	**330699**
005039	*SPG*	5039
00505135SS	*JN-MN*	**471472**!
00505473SS	*JN-MN*	**471442**!
00511451	*ALLCH*	**417205**!
005171	*DISOG*	**470625**
0051718	*HYST*	**455189**
0052623	*HYST*	40337S
00526624	*ALLCH*	240735
0053-12934SS	*JN-MN*	481534
005331	*SPG*	**473229**
00535179	*ALLCH*	**417205**!
0053670	*ALLCH*	**417316**!
0053902	*HYST*	**455858**
00542951	*ALLCH*	**411394**!
005523	*DISOG*	**473238**
005524	*DISOG*	710009
0055252	*HYST*	**471466**!
0056-12337LUP	*JN-MN*	**471281**!
0056-14981LPD	*JN-MN*	**471551**!
0056-15213LPD	*JN-MN*	450536
0056-15213LPD	*JN-MN*	**471535**!
0056-5239SS	*JN-MN*	**471281**!
0056-5850SS	*JN-MN*	**472705**!
0056-6069SS	*JN-MN*	**472705**!
0056-6388SS	*JN-MN*	**472705**!*
005733	*SPG*	**472016**
0057549	*HYST*	**471272**!
0057936	*HYST*	40494S
0059-5138SS	*JN-MN*	**471558**
0059-6570LPD	*JN-MN*	**471558**
0059395	*HYST*	**415001**!
00599472	*ALLCH*	**470898**
0059971146	*MERCE*	224045
0059971146	*MERCE*	40X62X12!
0059974146	*MERCE*	224045
0059974146	*MERCE*	40X62X12!
0059974446	*MERCE*	125X150X12!
0059974446	*MERCE*	231250
0059975046	*MERCE*	1012
0059975046	*MERCE*	1012N
0059975046	*MERCE*	45X62X8!
0059978347	*MERCE*	710290
00605.16540	*ALFAR*	224100
00605165400000	*ALFAR*	224100
00610BR	*SABO*	80X100X10!
00615BR	*SABO*	36X56X10
00616BR	*SABO*	102X130X13
0062-11125SS	*JN-MN*	340849
0062-11327SS	*JN-MN*	351487
0062-12876LUP	*JN-MN*	**471255**!
0062-13059LUP	*JN-MN*	**471466**!
0062-13914LUP	*JN-MN*	**471466**!
0062-5084SS	*JN-MN*	**471466**!
0062-5152LUP	*JN-MN*	**471466**!
0062-5410SS	*JN-MN*	**471264**!
0062-6093SS	*JN-MN*	**471466**!
0062-6189SS	*JN-MN*	343105
0062-6189SS	*JN-MN*	7399S!
0062-9152LUP	*JN-MN*	**471564**
00624880LUP	*JN-MN*	**471255**!
00625506SS	*JN-MN*	**471255**!
00629634LUP	*JN-MN*	**471466**!
00644294	*ALLCH*	240356
0065-13135LPD	*JN-MN*	**481537**
0065-13469LPD	*JN-MN*	**481073**
0065-4789SS	*JN-MN*	**481073**
0065-5591SS	*JN-MN*	**481528**
0065-5831LUP	*JN-MN*	**481073**
0065-9305LPD	*JN-MN*	**481397**
0066-5151SS	*JN-MN*	**481537**
0066-5984LPD	*JN-MN*	**471579**
0066-6439SS	*JN-MN*	17X40X7
00665900	*AJUSA*	223035
0066974	*HYST*	**323138**!
0067-10336LUP	*JN-MN*	**471579**
00670142	*ALLCH*	**473214**!
006748	*NATEN*	**472572**!
0068-10904LPD	*JN-MN*	**471553**!
0068-4793SS	*JN-MN*	**471538**!
0068-5305SS	*JN-MN*	**471529**
0068-6851LA	*JN-MN*	**471553**!
0068-9113LPD	*JN-MN*	**471529**
00685131	*ALLCH*	**472144**!
00688032	*GMC*	J1109
00688282	*GMC*	JV1837
00688283	*GMC*	JV1836=
0069028	*HYST*	**411376**!
0069970546	*MERCE*	120X145X12!
0069970546	*MERCE*	231204
0069971247	*MERCE*	710289
0069973347	*MERCE*	712003
0069979846	*MERCE*	**417967**!
007-997-3646	*MERCE*	231002
00701425	*SPERY*	**472015**
007102610	*LF-PT*	**410308**!
007214941	*LF-PT*	456967N*=
007226017	*LF-PT*	**417474**
0074961	*ALLCH*	**412040**
00749622	*ALLCH*	**470898**!
0075-12564LDS	*JN-MN*	**471567**!
0075-13068LPD	*JN-MN*	**471567**!
0075-13580LPD	*JN-MN*	**471554**!
0075-14797LDS	*JN-MN*	**470954**!
0075-15439LPD	*JN-MN*	**470954**!
0075-5166SS	*JN-MN*	**470954**!
0075-5195SS	*JN-MN*	1049
0075-5992SS	*JN-MN*	**470954**!*
0075-6418SS	*JN-MN*	**471567**!
0075-6531SS	*JN-MN*	**471567**!
0075-6932LA	*JN-MN*	**471567**!
0075-8463LUP	*JN-MN*	**471554**!
0075-9240LUP	*JN-MN*	**470954**!
0075-9339LUP	*JN-MN*	**471643**!
0075-9651LUP	*JN-MN*	**470954**!
0075-9983LUP	*JN-MN*	**471684**!
0075-9992LPD	*JN-MN*	**471567**!
00753081033	*ALLCH*	**416891**!
00756268SS	*JN-MN*	343185
00757674	*ALLCH*	**470898**!
0077115	*HYST*	**416107**!
0077692	*HYST*	**470898**
0077993	*HYST*	**471413**

! Industrial Size/Type * Minor Width Difference

= The U.S. customer service number is 877-4-TIMKEN. The Canadian customer service numbers are 800-565-4927 (English) and 800-565-0438 (French-Canadian).

Mfr. No.	Name	Zero Duplication or Recommended Industrial
0078-14779LPD	*JN-MN*	20X32X7
0078-18798LUP	*JN-MN*	**481443**!
0078016	*HYST*	**473459**
007855523	*LF-PT*	471337
00792762	*ALLCH*	6703S
0079385	*HYST*	**415991**
0079385	*HYST*	**415991**!
0079389	*HYST*	**416271**!
00796BR	*SABO*	16X32X7
0080-11924LPD	*JN-MN*	**471231**!
00802975	*ALLCH*	**471271**!
0081-10403LPD	*JN-MN*	**471231**!
0081-12406LPD	*JN-MN*	**471645**
0081-13438LPD	*JN-MN*	471686
0081-13647LPD	*JN-MN*	471729
0081-15451LPD	*JN-MN*	**471645**
0081-5292SS	*JN-MN*	**417539**!
0081-7348LPD	*JN-MN*	**474253**
0081-9743LPD	*JN-MN*	**471231**!
00815BR	*SABO*	22X42X10
00825BR	*SABO*	22X42X10
00839BR	*SABO*	32X50X8
0084-13062LPD	*JN-MN*	473413
0086-17420SS	*JN-MN*	22X32X7
0087-13581LPD	*JN-MN*	**471137**
0087-5118SS	*JN-MN*	**254287***
0087-5720LPD	*JN-MN*	**471570**!
0087-5780SS	*JN-MN*	**471570**!
0087-6133SS	*JN-MN*	**471267**!
0087-6158SS	*JN-MN*	240733
0087-6499SS	*JN-MN*	**254287**
0087-6710SS	*JN-MN*	**471646**!
0087-6988LPD	*JN-MN*	**471267**!
0087-8465LPD	*JN-MN*	**470590**
0087-9415LPD	*JN-MN*	**471267**!
0087-9975LPD	*JN-MN*	**471646**!
0087355	*HYST*	**415995**!
0087382	*HYST*	**416404**!
00875660LUP	*JN-MN*	450398
00875660LUP	*JN-MN*	**471267**!
0087656	*HYST*	**415449**!
00878464LUP	*JN-MN*	**471570**!
0088035	*HYST*	**470954**!
0088176	*HYST*	**415447**
0089307	*HYST*	**417262**!
0089970146	*MERCE*	223610
0089970146	*MERCE*	710197!
0089971146	*MERCE*	225875
0089971146	*MERCE*	58X75X11!
0093-10229LUP	*JN-MN*	**471571**
0093-5880LPD	*JN-MN*	**450039***
0093-6728LA	*JN-MN*	50419
0093-6800LPD	*JN-MN*	**471647**
0093-8928LPD	*JN-MN*	472951
0093-8928LPD	*JN-MN*	**474252**
0093-9186LUP	*JN-MN*	**471647**
00930838	*ALLCH*	**417278**
00939219LPD	*JN-MN*	**471255**!
0095226	*CHRYS*	**471341**!
0096-11316SS	*JN-MN*	**451583**!
0096-11893LUP	*JN-MN*	**450339**
0096-5853LA	*JN-MN*	**451583**!
0096-9744LUP	*JN-MN*	**451583**!*
00967612	*ALLCH*	**472164**!
0097069	*HYST*	**413246**
00977BR	*SABO*	60X82X12!
0098-13044LPD	*JN-MN*	25X47X7
0098-13994LPD	*JN-MN*	25X52X7!
0098-5324SS	*JN-MN*	**472324**!
0098-6755LPD	*JN-MN*	**471688**
0098-7116LUP	*JN-MN*	**471224**!
009814589SS	*JN-MN*	222510
009814589SS	*JN-MN*	25X35X7!
0098471	*HYST*	**415295**
0098524	*HYST*	**472179**
0098643	*HYST*	**410737**!
0098732	*HYST*	417503
0098D3902	*LF-PT*	**416332**!
0099973547	*MERCE*	710289
0099978947	*MERCE*	710289
01-50140	*LILIS*	204027
010-409-085E	*AUDI*	223010
010-409-085E	*VW*	223010
010-409-255	*VW*	1965
010-409-255A	*VW*	1965
010-409-529C	*AUDI*	1174
010-409-529C	*VW*	1174
010-409-568	*AUDI*	3083
010-409-568	*VW*	3083
010-409-568A	*VW*	3083
0100-10615SS	*JN-MN*	**471224**
0100-10749LPD	*JN-MN*	**471649**!
0100-10751LUP	*JN-MN*	**471224**!
0100-10952LUP	*JN-MN*	**471689**!
0100-12489LUP	*JN-MN*	**471270**!
0100-13458LUP	*JN-MN*	**450593**!
0100-13673LPD	*JN-MN*	**471689**!
0100-14058LUP	*JN-MN*	**471224**!
0100-15668LUP	*JN-MN*	**471649**!
0100-16447LUP	*JN-MN*	**471270**!
0100-17694LDS	*JN-MN*	**471224**!
0100-5629LPD	*JN-MN*	**471744**!
0100-5700SS	*JN-MN*	**472311**!
0100-5764SS	*JN-MN*	**471733**
0100-5793SS	*JN-MN*	**471689**!
0100-5986LA	*JN-MN*	**471689**!
0100-6007LUP	*JN-MN*	**471760**
0100-6084LUP	*JN-MN*	**471224**!
0100-6330LPD	*JN-MN*	**471733**
0100-8442SS	*JN-MN*	**471649**!
0100-8485LPD	*JN-MN*	**471649**!
0100-8814LUP	*JN-MN*	**471649**!
0100-8975LPD	*JN-MN*	**471619**!
0100-9520LUP	*JN-MN*	**471760**
0100-9900LUP	*JN-MN*	**471760**
010010183LUP	*JN-MN*	**450593**!
01001CU	*CASE*	**473473**
01002	*WEBER*	**471267**!
010032AB	*CASE*	**471504**!
01008D	*CASE*	**471795**
01009859LUP	*JN-MN*	**471224**!
0101493	*THIOK*	**472636**!
010187	*AVCO*	40494S
010188	*AVCO*	**471689**
010192	*AVCO*	**470625**!
010195	*AVCO*	**473440**!
0102602	*HYST*	**455471**
0103-5132SS	*JN-MN*	481650
0103-6704SS	*JN-MN*	**471076**
01038B	*SABO*	45X85X13
010392	*AVCO*	**471689**!
01039LX	*CASE*	**471270**!
010409085	*VW*	223010
010409085	*VW*	30X42X7!
010409085D	*VW*	223010
010409085D	*VW*	30X42X7!
010409529B	*VW*	1174
010409529B	*VW*	38X52X8.5!
01040LX	*CASE*	**470390**
0105-6424LA	*JN-MN*	**473419**
010547	*AVCO*	**473010**!
010570AB	*CASE*	**254287**
0106-14672LPD	*JN-MN*	**471735**
0106-5723LUP	*JN-MN*	**450342**
0106-5724LPD	*JN-MN*	**471762**!
0106-6771SS	*JN-MN*	**471705**!
0106-7215LUP	*JN-MN*	**471651**
0106-9013LUP	*JN-MN*	**450188**
0106-9276LPD	*JN-MN*	**471705**!
010615	*VICK*	470328
010615	*VICK*	**481213**!
01061528	*VICK*	**415442**!
01061528	*VICK*	55442
01069363LPD	*JN-MN*	**470606**!
010756AB	*CASE*	**415379**
010816AB	*CASE*	**418028**
010816AB	*CASE*	455137!
010817	*CASE*	**418028**
010817	*CASE*	455137!
010817AB	*CASE*	**418028**
010817AB	*CASE*	455137!
010846AB	*CASE*	240731
010876AB	*CASE*	**473214**
010889AB	*CASE*	**415001**!
0109000	*HYST*	**474276**!
0109224	*HYST*	**471744**!
010983AB	*CASE*	**471649**!
0109970947	*MERCE*	710289
0109973347	*MERCE*	710289
0112-10406LUP	*JN-MN*	**471763**
0112-10616SS	*JN-MN*	**471692**!
0112-11834SS	*JN-MN*	**472560N**!
0112-17691LDS	*JN-MN*	**471692**!
0112-17701LUP	*JN-MN*	**471785**!
0112-5254SS	*JN-MN*	**472560N**!
0112-5298SS	*JN-MN*	**470712**!
0112-5307SS	*JN-MN*	**471652**
0112-5583LPD	*JN-MN*	**471747**!
0112-7054LUP	*JN-MN*	**470712**!
0112-9065LUP	*JN-MN*	**472954**
0112-9460LUP	*JN-MN*	**471692**!
0112-9558LUP	*JN-MN*	**471763**
0112-9625LUP	*JN-MN*	**471652**
0112-9714LPD	*JN-MN*	**350974**!
0112-9789LUP	*JN-MN*	**476838**!
0112-9848LUP	*JN-MN*	**471652**
0112-9848LUP	*JN-MN*	482208!
01129650LPD	*JN-MN*	**471785**!
011299	*AVCO*	**470954**!
0115	*GARLK*	**471579**
0115-5212LUP	*JN-MN*	**471736**
0116	*GARLK*	**471579**
01160BR	*SABO*	65X80X8
011613200	*EATON*	**415295**
011641	*AVCO*	**471870**!
0118-10426LUP	*JN-MN*	**471354**!
0118-15129LPD	*JN-MN*	30X47X7
0118-16465LDS	*JN-MN*	**473205**!
0118-17236LUP	*JN-MN*	223014
0118-18463LUP	*JN-MN*	**473205**!
0118-5204LPD	*JN-MN*	**474256**
0118-6309SS	*JN-MN*	**471354**!
0118-6474SS	*JN-MN*	30X62X7*
0118-7011LUP	*JN-MN*	**474254**
0118-9511LPD	*JN-MN*	**472475**
011810500LPD	*JN-MN*	**474255**
011810569LUP	*JN-MN*	**474255**
011810682LPD	*JN-MN*	**471765**!
01183BR	*SABO*	75X105X13
01186162LUP	*JN-MN*	**471765**!
011892	*AVCO*	40568S
0119488	*HYST*	240698
0119970647	*MERCE*	223005
0119975147	*MERCE*	239134
011V15BULK	*NATL*	011-V35BULK
012224	*AVCO*	**472572**!
01231AB	*CASE*	5M403
0123270	*HYST*	**415960**
012367	*AVCO*	**415088**!
012367	*AVCO*	**415088**
012401	*AVCO*	**473231**!
012404	*AVCO*	3893V!
012404	*AVCO*	**415379**!
0125-10058LUP	*JN-MN*	**471766**!
0125-10608SS	*JN-MN*	**471737**=
0125-10833SS	*JN-MN*	**471413**
0125-10877SS	*JN-MN*	**474278**
0125-11583SS	*JN-MN*	340356
0125-11982LUP	*JN-MN*	**471818**
0125-13578LDS	*JN-MN*	**471801**!
0125-14904LDS	*JN-MN*	**471766**!
0125-5026LA	*JN-MN*	**471766**!
0125-5164SS	*JN-MN*	**471833***
0125-5389LUP	*JN-MN*	**471413**!
0125-5727LA	*JN-MN*	**471766**!
0125-6328SS	*JN-MN*	**470806***
0125-8820LPD	*JN-MN*	**471413**!
0125-8924LPD	*JN-MN*	**471833**
0125-9180LPD	*JN-MN*	450177
0125-9273LPD	*JN-MN*	**471737**
012510053LPD	*JN-MN*	450165
012510053LPD	*JN-MN*	**471801**!
012511193LPD	*JN-MN*	**471795**
01255728LUP	*JN-MN*	**471787**!
01255729LUP	*JN-MN*	450165
01255729LUP	*JN-MN*	**471801**!
0125663	*HYST*	**473367**
0125689	*HYST*	**417350**!
012569	*AVCO*	**450362**
012570	*AVCO*	**472185**!
0125710	*HYST*	**471554**!
012572	*AVCO*	**473232**
012574	*AVCO*	**472164**!
01259028LUP	*JN-MN*	**471750**!
01259423LPD	*JN-MN*	**471795**
0126-15054LPD	*JN-MN*	3476
012617278LUP	*JN-MN*	223275
012617278LUP	*JN-MN*	32X56X10!
0126769	*HYST*	40627S=
012751	*AVCO*	204008
012851	*AVCO*	**472185**!
012915491LPD	*JN-MN*	33X50X12!
012943	*AVCO*	**471854**!
0129499	*HYST*	JV980=
012964	*AVCO*	**471224**
0129936	*HYST*	**471835**!
0129977447	*MERCE*	712004
0131-12210LPD	*JN-MN*	**473422**
0131-12830LPD	*JN-MN*	**473211**!
0131-14341LPD	*JN-MN*	**472826**!
0131-6134LPD	*JN-MN*	**473213**!
0131-7109LA	*JN-MN*	40769S
0131-9630LPD	*JN-MN*	481834
0133456	*HYST*	**471737**
0133523	*HYST*	**455019**!
0134717	*HYST*	**471231**!
0137-10404LUP	*JN-MN*	**473214**
0137-10485LUP	*JN-MN*	**472258**!
0137-10524LUP	*JN-MN*	470950!
0137-10524LUP	*JN-MN*	6241S
0137-10753LUP	*JN-MN*	**470774**!
0137-10855LPD	*JN-MN*	**472354**!
0137-11568LPD	*JN-MN*	**472287**!
0137-14854LPD	*JN-MN*	**470774**!
0137-15099LUP	*JN-MN*	**471192**
0137-18799LUP	*JN-MN*	450516
0137-3740LPD	*JN-MN*	**473214**!
0137-40000LDS	*JN-MN*	**473214**!

! Industrial Size/Type * Minor Width Difference

= The U.S. customer service number is 877-4-TIMKEN. The Canadian customer service numbers are 800-565-4927 (English) and 800-565-0438 (French-Canadian).

Mfr. No.	Name	Zero Duplication or Recommended Industrial
0137-5153SS	JN-MN	473214!
0137-5271SS	JN-MN	472258!
0137-5644LUP	JN-MN	473215!
0137-5731LPD	JN-MN	470950!
0137-5731LPD	JN-MN	6241S
0137-5804SS	JN-MN	472258!
0137-5830SS	JN-MN	471192
0137-5983LA	JN-MN	472287!
0137-60013LDS	JN-MN	473214!
0137-6369SS	JN-MN	323138!
0137-6506SS	JN-MN	471192*
0137-6528LA	JN-MN	470774!
0137-6786LA	JN-MN	450776!
0137-8449SS	JN-MN	470950!
0137-8449SS	JN-MN	6241S
0137-9080LUP	JN-MN	472354!
0137-9394LUP	JN-MN	471835!
0137-9733LPD	JN-MN	471276
0137174	HYST	417269!
01378831LPD	JN-MN	471192
0138120	HYST	472258!
0139852	HYST	340847
0139971447	MERCE	712003
014-311-113	AUDI	222030
014-311-113	VW	222030
014-311-113F	VW	222030
014-409-399B	AUDI	224052
014-409-399B	VW	224052
014-409-399D	AUDI	224052
014-409-399D	VW	224052
01404086	ALLCH	470530!
0140471	HYST	415725!
0141113	HYST	415725=
0141149	HYST	417605
0141671	HYST	417603!
0143-12894SS	JN-MN	473244!
0143-13554LUP	JN-MN	473016!
0143-19084LDS	JN-MN	3395!
0143-19084LDS	JN-MN	352444
0143-4050LPD	JN-MN	473225!
0143-4850LPD	JN-MN	473016!
0143-5732LUP	JN-MN	473226
0143-7047LA	JN-MN	473224!
0143-7216LUP	JN-MN	473224!
0143-7346LPD	JN-MN	474264
0143-9181LUP	JN-MN	3395!
0143-9181LUP	JN-MN	352444
0143-9454LPD	JN-MN	473225!
0143040	HYST	415498
0145752	HYST	471267!
0145753	HYST	471224!
0146-10055LPD	JN-MN	470625!
0146-11809LUP	JN-MN	450523
0146-4193LUP	JN-MN	473439!
01464193LPD	JN-MN	473439!
014848	AVCO	417082
014911427LUP	JN-MN	480630!
01499643LPD	JN-MN	480630!
0150-10172LPD	JN-MN	470625!
0150-11272SS	JN-MN	340136
0150-11654LUP	JN-MN	481163!
0150-12184LUP	JN-MN	5115
0150-12294LPD	JN-MN	473440!
0150-14618LDS	JN-MN	473228!
0150-15143LDS	JN-MN	474281!
0150-5414LUP	JN-MN	410190
0150-5619SS	JN-MN	473228!*
0150-5696LUP	JN-MN	474281!
0150-5734LUP	JN-MN	473440!
0150-5821SS	JN-MN	470625!
0150-6679LUP	JN-MN	473227!
0150-7033LUP	JN-MN	470625!
0150-9041LUP	JN-MN	473228
0150-9056LUP	JN-MN	451857
0150-9483LPD	JN-MN	473228!
0150-9831LPD	JN-MN	481163!
0150-9952LUP	JN-MN	473228
015000	AVCO	473227!
0150006	LILIS	200354
015001	AVCO	472394
0150030	HYST	410190
015011100LPD	JN-MN	470059
015011100LPD	JN-MN	470380!
015011172LPD	JN-MN	470059
015011172LPD	JN-MN	470380!
0150158	HYST	474281!
0150194	HYST	415867
015077	AVCO	471224!
01507BR	SABO	24X42X10
0152848	HYST	417480!
0152863	HYST	416278
0152883	HYST	416888!
015326	AVCO	471958
0153716	HYST	200885
01551BR	SABO	35X58X10
0155346	HYST	417343!
0155361	HYST	JX1190
01553BR	SABO	45X72X95
0155402	HYST	J1111
0155403	HYST	412920
0155577	HYST	471538!
0156-10190LPD	JN-MN	476510=
0156-11514LPD	JN-MN	471827!
0156-14019LUP	JN-MN	472299
0156-15198LPD	JN-MN	473229!
0156-15770LDS	JN-MN	473229!
0156-17486LUP	JN-MN	472299
0156-3876LUP	JN-MN	473229!
0156-5536LUP	JN-MN	473229
0156-5627LPD	JN-MN	470682
0156-6836LUP	JN-MN	472213
0156-9445LPD	JN-MN	471821!
0156042	HYST	413247!
0156200	HYST	416229
0156205	HYST	471424!
0156220	HYST	415897
0156223	HYST	415458!
0156234	HYST	416339
01565542LPD	JN-MN	455655!*
0157-11302LPD	JN-MN	482253
0157-11498LPD	JN-MN	482253
0157-14577LPD	JN-MN	224025
0157-17405LUP	JN-MN	224025
0157884	HYST	417316!
01589BR	SABO	33X52X6
0159178	HYST	416130!
0159295	HYST	45637S
0159572	HYST	416624!
016-409-399B	AUDI	224520
016-409-399B	VW	224520
0161003	LILIS	473236!
0161014	LILIS	473197
016168500	EATON	410752
016170700	EATON	471224!
016171000	EATON	471424!
0162-10035LPD	JN-MN	473232!
0162-10060LPD	JN-MN	473010!
0162-12007LPD	JN-MN	473367!
0162-12007LPD	JN-MN	473367
0162-13517LDS	JN-MN	473367
0162-17687LDS	JN-MN	473231!
0162-17745LUP	JN-MN	481864
0162-3965LPD	JN-MN	473010!
0162-40043LDS	JN-MN	473231!
0162-6001LA	JN-MN	473231
0162-6056LUP	JN-MN	473010!
0162-6419SS	JN-MN	473231!
0162-6509LA	JN-MN	473232
0162-7073LUP	JN-MN	473231
0162-7365LUP	JN-MN	473367!
0162-7365LUP	JN-MN	473367
0162-9636LUP	JN-MN	473232!
0162-9849LUP	JN-MN	473444
016210405LPD	JN-MN	474274
01625BR	SABO	27X42X10
016321	JOHND	471466!
0163871	HYST	417487!
0163871	HYST	417487
0163912	HYST	473459
0164639	HYST	JV1166
01669BR	SABO	55X100X13
0167176	HYST	417602!
01672BR	SABO	10X22X7!
0168-10054LUP	JN-MN	473234!
0168-10250LUP	JN-MN	473234
0168-11015LPD	JN-MN	470086
0168-15767LDS	JN-MN	473234!
0168-16241LUP	JN-MN	473235!
0168-16467LDS	JN-MN	473235!
0168-5669LA	JN-MN	473234
0168-5690LPD	JN-MN	473445
0168-60023LDS	JN-MN	473235!
0168-60026LDS	JN-MN	473235!
0168-6122LUP	JN-MN	474265
0168-7031LUP	JN-MN	474265
0168-7048LPD	JN-MN	473233!
0168-8815LUP	JN-MN	473233!
0168-8861SS	JN-MN	473236!
0168-9395LUP	JN-MN	473236!
0168-9935SS	JN-MN	473235!
017-525-275B	AUDI	1217
0171-5480LPD	JN-MN	50191
01721BRG	SABO	712009
01722N	CASE	415007
017304550001	JOY	415138!
017304550003	JOY	455576!
01737BR	SABO	11X17X4
0174277	HYST	412473!
01746B	SABO	20X42X10
0175-10380LUP	JN-MN	472185!
0175-10617SS	JN-MN	40183S!
0175-11241LPD	JN-MN	473313
0175-11518LPD	JN-MN	473237!
0175-11822SS	JN-MN	473237!
0175-12006LPD	JN-MN	470334!
0175-13852LDS	JN-MN	472179
0175-14621LDS	JN-MN	472185!
0175-14849LPD	JN-MN	472164!
0175-14975LPD	JN-MN	472164!*
0175-15557LUP	JN-MN	472164!
0175-16371LUP	JN-MN	471141!
0175-17757LDS	JN-MN	472179
0175-18036LUP	JN-MN	471141!
0175-18419LDS	JN-MN	471831!
0175-19062LDS	JN-MN	472164!
0175-4465LUP	JN-MN	472179
0175-5597LUP	JN-MN	472185!
0175-5772LUP	JN-MN	470334!
0175-5993SS	JN-MN	450400
0175-8461LUP	JN-MN	470088
0175-8887LUP	JN-MN	473448
0175-9076LPD	JN-MN	471984
0175-9077LPD	JN-MN	472185!
0175-9710LUP	JN-MN	470334!
0175-9799LPD	JN-MN	471504!
0175-9854LUP	JN-MN	472164!
0175-9947LUP	JN-MN	471141!
0175-9955LUP	JN-MN	472179
01751BRG	SABO	712009
0176-6234LA	JN-MN	6936S
0176364	HYST	471138!
0177-11499LUP	JN-MN	50266
0177-18375LUP	JN-MN	1979
0177-18539LDS	JN-MN	1979
0177-6226LA	JN-MN	450285
017713066LPD	JN-MN	224570
017713066LPD	JN-MN	45X72X12!
017717392LUP	JN-MN	1012*
017717392LUP	JN-MN	1012N*
017717392LUP	JN-MN	45X62X8!*
0178-12678LPD	JN-MN	452742
0178345	HYST	415294!
0179177	ALLCH	455655!
0179603	HYST	417545
0179633	HYST	415962
01796432	ALLCH	415023
01797372	ALLCH	352541
01798BAG	SABO	58X85X13
018-321-243	AUDI	224052
018-321-243	VW	224052
01805977	ALLCH	415027=
0181-13922LDS	JN-MN	473450!
0181-15020LPD	JN-MN	472020
0181-5630LUP	JN-MN	473449!
0181-5988LA	JN-MN	450090
0181-9168LPD	JN-MN	472070
01814BRG	SABO	1965
0181692	HYST	416921!
0181737	HYST	471766!
0182614	HYST	471341!
0184-8510LUP	JN-MN	473453
018409399	VW	224520
018409399	VW	45X60X10!
0184926	HYST	415138!
0184947	HYST	416556!
0184947	HYST	472157
0187-12407LPD	JN-MN	473238!
0187-12528LPD	JN-MN	472572!
0187-14905LDS	JN-MN	472439
0187-16012LUP	JN-MN	473239!
0187-17670LDS	JN-MN	473238!
0187-17793LUP	JN-MN	472439
0187-5576SS	JN-MN	414045!*
0187-5750LA	JN-MN	472572!
0187-5773LA	JN-MN	414045!
0187-5826LPD	JN-MN	472439
0187-6727LA	JN-MN	473238
0187-6936LPD	JN-MN	473238!
0187-8989LUP	JN-MN	450084!
0187-9189LPD	JN-MN	472572!
0187-9190LPD	JN-MN	473240!
0187-9550LUP	JN-MN	472439
0187-9694SS	JN-MN	473238!
018726154	CEW	1214
018726154	CEW	1214N
01880BAGE	SABO	4564V
0188856	HYST	415035
01899	SABO	2146
0189977947	MERCE	223005
0191683SL	TRSCM	8059S
01918N	CASE	450311
0192239	HYST	JV933
0192250	HYST	JV1215=
0193-10527LPD	JN-MN	473461!
0193-10949LUP	JN-MN	473462
0193-11535LPD	JN-MN	473460
0193-13579LDS	JN-MN	473459
0193-15634LDS	JN-MN	472394

! Industrial Size/Type * Minor Width Difference

= The U.S. customer service number is 877-4-TIMKEN. The Canadian customer service numbers are 800-565-4927 (English) and 800-565-0438 (French-Canadian).

Mfr. No.	Name	Zero Duplication or Recommended Industrial
0193-16719LDS	JN-MN	472144!
0193-16984LUP	JN-MN	473459
0193-3556LUP	JN-MN	471195!
0193-5128LPD	JN-MN	473462
0193-5276LA	JN-MN	471391!
0193-5737LUP	JN-MN	472394
0193-7347LPD	JN-MN	472394*
0193-8443LPD	JN-MN	472319
0193-9396LPD	JN-MN	473462
0193-9596LPD	JN-MN	473241
0193-9626LPD	JN-MN	472144!
0193210	HYST	417362!
01935826LPD	JN-MN	472439
0193796	HYST	415988
0196-11837LPD	JN-MN	472492!
0196-5466LPD	JN-MN	473464!
0196-5466LPD	JN-MN	473464
0196-6666LA	JN-MN	450474
0196-8864LPD	JN-MN	450474
0196-9397LUP	JN-MN	450472!
0196069	HYST	411245!
0196071	HYST	418028
0196072	HYST	J1122
0196073	HYST	J1114=
01962984	ALLCH	415142
01964956	ALLCH	416339
01980BR	SABO	35X55X8!
0198291	HYST	417349!
01989086	ALLCH	415725!
01F-321-243	AUDI	224052
01F-321-243	VW	224052
01T4676A	FORD	473215!
01T4676A2	FORD	473215!
01T4676A3	FORD	473215!
01T4676A4	FORD	473215!
01T4813	FORD	450307
01T4813A	FORD	410308!
01T4832	FORD	6098=
01Y1190A	FORD	472179
01Y1190A1	FORD	472179
01Y4676A	FORD	471766!
01Y4676A1	FORD	471766!
02-01244-P1	ROCKW	370001A
02-7003942	WHITE	HU009A
02-7003943	WHITE	370003A
02-7021377	WHITE	370003A
02-7021378	WHITE	370023A
02-7022919	WHITE	370001A
02-7068938	WHITE	733067
02-7068983	WHITE	733067
02-7073109	WHITE	370065A
02-7073109	WHITE	376590A
02-7073109	WHITE	380065A
02-7073176	WHITE	370036A
02-7073176	WHITE	370349A
02-7074117	WHITE	370065A
02-7074117	WHITE	376590A
02-7074117	WHITE	380065A
02-7074737	WHITE	HU036A
02-7074738	WHITE	HU009A
02-7074739	WHITE	HU009A
02-7074741	WHITE	370012A
02-7074742	WHITE	370057A
02-7074743	WHITE	370023A
02-7074744	WHITE	370036A
02-7074744	WHITE	370349A
02-7074745	WHITE	370036A
02-7074745	WHITE	370349A
02-7074750	WHITE	370007A
02-7074803	WHITE	370001A
02-7074815	WHITE	370037A
02-7074815	WHITE	370338A
02-7074960	WHITE	370030A
02-7075003	WHITE	370012A
02-7075004	WHITE	HU011A
02-7075348	WHITE	386025A
02-7075348	WHITE	416158
02-7076252	WHITE	370065A
02-7076252	WHITE	380065A
02-7076255	WHITE	370037A
02-7076255	WHITE	370338A
02-7076258	WHITE	386025A
02-7076258	WHITE	416158
02-7076259	WHITE	386025A
02-7076259	WHITE	416158
02-7076260	WHITE	370036A
02-7076260	WHITE	370037A
02-7076260	WHITE	370338A
02-7076260	WHITE	370349A
02-7076261	WHITE	370036A
02-7076261	WHITE	370037A
02-7076261	WHITE	370338A
02-7076261	WHITE	370349A
02-7076262	WHITE	370036A
02-7076262	WHITE	370037A
02-7076262	WHITE	370338A
02-7076262	WHITE	370349A
02-7076264	WHITE	370065A
02-7076264	WHITE	376590A
02-7076264	WHITE	380065A
02-7076265	WHITE	370007A
02-7076266	WHITE	370007A
02-7076267	WHITE	370007A
02-7076268	WHITE	370007A
02-7076269	WHITE	370001A
02-7076270	WHITE	370001A
02-7076274	WHITE	370036A
02-7076274	WHITE	370349A
02-7077371	WHITE	HU009A
02-7104674	WHITE	370003A
02-7108334	WHITE	370030A
02-7108900	WHITE	370003A
02-7109090	WHITE	386025A
02-7109090	WHITE	416158
02-7109091	WHITE	386025A
02-7109091	WHITE	416158
02-7128839	WHITE	370003A
02-7223499	WHITE	733067
02_7074450	WHITE	370003A
02_7074573	WHITE	H075
02_7074736	WHITE	HU028A
020-01270	NOVO	415449!
020-301-189F	VW	474288
020-301-189G	VW	474288
020-301-189M	VW	225010
020-301-189R	VW	225010
020-311-113	VW	222240
020-489-085	VW	474288
020-498-085F	VW	1209
0200-10207LUP	JN-MN	471870!
0200-10551SS	JN-MN	331107N
0200-10618SS	JN-MN	40301S
0200-10755LPD	JN-MN	472492!
0200-10757LPD	JN-MN	472397!
0200-10834SS	JN-MN	472492!
0200-11018LUP	JN-MN	472397!
0200-11174SS	JN-MN	40410S
0200-11240LPD	JN-MN	473464!
0200-11240LPD	JN-MN	473464
0200-11551LUP	JN-MN	472492!
0200-11855LDS	JN-MN	471424!
0200-11970SS	JN-MN	40410S
0200-12164SS	JN-MN	487945
0200-12638LPD	JN-MN	55524
0200-13571LPD	JN-MN	471424!
0200-13587LPD	JN-MN	471870!
0200-14154LPD	JN-MN	472924!
0200-15558LUP	JN-MN	450446
0200-15729LDS	JN-MN	472397!
0200-17688LDS	JN-MN	471424!
0200-2470LPD	JN-MN	412027
0200-5144LUP	JN-MN	412028
0200-5892LPD	JN-MN	410102
0200-7361LPD	JN-MN	473463
0200-8858LPD	JN-MN	410102
0200-9020LPD	JN-MN	473242
0200-9043LUP	JN-MN	472397!
0200-9120LUP	JN-MN	472492!
0200-9652LUP	JN-MN	470530!
0200-9653LPD	JN-MN	472924!
0200-9736LPD	JN-MN	471424!
02001	BRAD	471554!
02001	WEBER	471554!
02001350	AM MA	418028
02001350	AM MA	455137!
02003	BRAD	472179
02004	BRAD	472179
0200446	HYST	410825
0200490	HYST	415854
02005	BRAD	471801!
02007	WEBER	240009
02007D	BRAD	240009
02009858LUP	JN-MN	471424!
02010	WEBER	472258!
02011	WEBER	351487
020118000	EL-WH	204035
02012	WEBER	471539!
02013	WEBER	473367!
02013	WEBER	473367
02015	WEBER	472164!
02016	WEBER	474253!
02017	WEBER	471558
02018	WEBER	343185
02019028	GMC	HU042A
020213000	EL-WH	204038
02022846	GMC	HU042A
02023	WEBER	471224!
02024	WEBER	350909
02024	WEBER	471224!
02024074	GMC	730016
02025	WEBER	240735
02026	WEBER	481443!
020293900	EL-WH	204017
0203-5221LA	JN-MN	450307
02031	WEBER	471567!
02032	MAGNA	471224!
02034	MAGNA	240151
02039CS	CASE	471271!
02051BR	SABO	38X54X10
02051VM	TRSCM	343104
0205275	EL-WH	291099
020543400	EL-WH	204029
020543400	EL-WH	204507!
0206-10474LUP	JN-MN	450307
0206-10701LPD	JN-MN	416738!
0206-10701LPD	JN-MN	450096
0206-10860LUP	JN-MN	472012
0206-11014LPD	JN-MN	450313
0206-12163LPD	JN-MN	472012
0206-16533LUP	JN-MN	451948
0206-17054LUP	JN-MN	450307
0206-5022LUP	JN-MN	473466
0206-5145LUP	JN-MN	450311
0206-5571LPD	JN-MN	450311
020613	FED	6957=
020674500	EL-WH	203020
020708000	EL-WH	410102
020712000	EL-WH	473239!
020727100	EL-MO	455079!
020727100	EL-WH	455079!
02077573	GMC	HU009A
02083	NAK	19X47X7
0208348	HYST	450400
0208814	HYST	415090
0209090	HYST	471504
021-105-245C	PORSC	227530
021-105-247A	PORSC	224250
021-105-247A	VW	224250
0210108	HYST	471689!
02105CS	CASE	417262!
021105245C	VW	472439
0212-10253LUP	JN-MN	473243
0212-10259LUP	JN-MN	470898
0212-10756LUP	JN-MN	473467
0212-10911LPD	JN-MN	413470!
0212-11522LPD	JN-MN	410308!
0212-11981LPD	JN-MN	416267!
0212-14002LDS	JN-MN	453066
0212-14002LDS	JN-MN	470898!
0212-14619LDS	JN-MN	472016!
0212-16452LUP	JN-MN	472016!
0212-17178LDS	JN-MN	472409!
0212-17952LUP	JN-MN	415349
0212-4587LUP	JN-MN	450639
0212-6081SS	JN-MN	410308!
0212-6081SS	JN-MN	473468
0212-6113LPD	JN-MN	470898
0212-6292SS	JN-MN	472016!*
0212-6941LA	JN-MN	455080
0212-8462LPD	JN-MN	472016
0213066	HYST	343186
02145BRG	SABO	712008
0216-11569LPD	JN-MN	450621
0216-5792LUP	JN-MN	55X72X8!
02176BRG	SABO	16X24X6
0217985	HYST	J1121
0218-11055LUP	JN-MN	470354
0218-11515LPD	JN-MN	473471
0218-11696LPD	JN-MN	412943
0218-12364LPD	JN-MN	472020
0218-14970LPD	JN-MN	473244!
0218-18426LUP	JN-MN	470354*
0218-19146LDS	JN-MN	416268
0218-4976LPD	JN-MN	472234
0218-5632LPD	JN-MN	413472
0218-8873LPD	JN-MN	473245!
0218-9398LUP	JN-MN	473243
0223124SE48HM	AM BO	471255!
0225-10301LUP	JN-MN	411253!
0225-10418LUP	JN-MN	472636!
0225-10432LUP	JN-MN	471272!
0225-10513LUP	JN-MN	410737!
0225-10623SS	JN-MN	40316S
0225-10959LPD	JN-MN	415254
0225-10982LPD	JN-MN	411253!
0225-12842LDS	JN-MN	471272!
0225-13316LDS	JN-MN	472636!
0225-15889LUP	JN-MN	411376!
0225-16268SS	JN-MN	411253!
0225-17113LUP	JN-MN	472636!
0225-18412LDS	JN-MN	415259!
0225-6013SS	JN-MN	473473
0225-6296LA	JN-MN	410737!
0225-6336LUP	JN-MN	472636!
0225-8493LPD	JN-MN	471138!
0225-8494LPD	JN-MN	471138!
0225-8495LPD	JN-MN	415254
0225-8991LUP	JN-MN	411376!

! Industrial Size/Type * Minor Width Difference

= The U.S. customer service number is 877-4-TIMKEN. The Canadian customer service numbers are 800-565-4927 (English) and 800-565-0438 (French-Canadian).

Mfr. No.	Name	Zero Duplication or Recommended Industrial
0225-9218LPD	JN-MN	473473
0225-9686LPD	JN-MN	412920!
0225-9715LUP	JN-MN	415259!
02264BRG	SABO	710232
02276798	ALLCH	472299=
022818810LUP	JN-MN	225875*
022818810LUP	JN-MN	58X75X11!*
02284BD	CASE	470625!
02288	SABO	3543
0231-15065LUP	JN-MN	442874
0231-16535LUP	JN-MN	472150
0231-17817LUP	JN-MN	472150
0231-9149LUP	JN-MN	411394!
0231950	HYST	416288!
0232220	HYST	471765!
0234-9750LUP	JN-MN	417480!
0234003	HYST	471281!
0234047	HYST	412119!
023510	EVERS	JV933
0235430	HYST	417344!
0236-11453LPD	JN-MN	412119!
023614643LPD	JN-MN	226020
023614643LPD	JN-MN	60X80X8!
0236836	HYST	J1126
0236939	EATON	474281!
0237-11875LPD	JN-MN	413246
0237-13315LDS	JN-MN	416271!
0237-15457LPD	JN-MN	412861
0237-16536LUP	JN-MN	410825
0237-40042LDS	JN-MN	416271!
0237-5931LUP	JN-MN	416071*
0237-6071LA	JN-MN	412119!
0237-6879LA	JN-MN	473475
0237-9144LPD	JN-MN	413247!
0237-9319LUP	JN-MN	416271!
0237-9409LUP	JN-MN	413247!
0237-9546LUP	JN-MN	470565!
02373BRG	SABO	13X26X7
0240912	HYST	415138!
0240913	HYST	415363=
0240913	HYST	417362!
0243-10329LPD	JN-MN	476272=
0243-11143LUP	JN-MN	411245!
0243-11660LPD	JN-MN	412040
0243-6432LUP	JN-MN	417073
0243-9171LUP	JN-MN	471887*
0243-9374LUP	JN-MN	417073
0243-9825LUP	JN-MN	450104
0244-10120LUP	JN-MN	412040
02449619	ALLCH	473215!
02449BRG	SABO	712449
02449BRGF	SABO	712449
02451BRG	SABO	75X90X10
0246-12675LPD	JN-MN	50560*
02469260	ALLCH	472258
0248630	HYST	472015!
025-105-249	AUDI	224835
025-105-249	VW	224835
025-105-249A	AUDI	224835
025-105-249A	VW	224835
0250-10036LPD	JN-MN	455079!
0250-10121LUP	JN-MN	415449!
0250-10184LUP	JN-MN	472029
0250-10208LUP	JN-MN	415449!
0250-10345LPD	JN-MN	410496!
0250-10619SS	JN-MN	415449!
0250-10797LUP	JN-MN	470605!
0250-11167LPD	JN-MN	415001!
0250-14620LDS	JN-MN	415449!
0250-15566LDS	JN-MN	471271!
0250-16933LUP	JN-MN	415449!
0250-18720LUP	JN-MN	472029
0250-5542LPD	JN-MN	455655!
0250-5598LUP	JN-MN	415001!
0250-5744LUP	JN-MN	455079!
0250-6924LA	JN-MN	415001!
0250-7027LA	JN-MN	415082
0250-8496LPD	JN-MN	410496!
0250-8497LUP	JN-MN	455655!
0250-8865LPD	JN-MN	415001!
0250-9751LUP	JN-MN	471271!
0250-9790LUP	JN-MN	471271!
0250-9863LPD	JN-MN	416273!
02511BRAG	SABO	712511
02511BRAGF	SABO	712511
02512BRGE	SABO	712512
02516BRGE	SABO	710211
0255-14610LPD	JN-MN	65X90X10!
0255-17760LUP	JN-MN	65X85X10
0255-18376LUP	JN-MN	65X100X10
0255-40039LDS	JN-MN	65X100X10*
0256-13768LUP	JN-MN	417481
0256-6869LUP	JN-MN	415988
0256-9188LPD	JN-MN	415302
02572500	EL-WH	291099
02585110V	EATON	410102
0258511AM	EATON	470625!
0258511BF	EATON	471504!
0258511BR	EATON	416556!
0258511BR	EATON	472157
0258511BV	EATON	415074
0258511RR	EATON	472397!
0259805	HYST	J1117
026-103-051A	AUDI	716102
026-103-085D	AUDI	3476
026-103-085D	VW	3476
026-103-085J	AUDI	3476
0260666	HYST	416892!
026103051A	VW	716102
026103051A	VW	85X105X10!
0262-10050LUP	JN-MN	415458!
0262-10910LPD	JN-MN	415483!
0262-11017LUP	JN-MN	415483
0262-11833LPD	JN-MN	417079
0262-13858LDS	JN-MN	415483
0262-14831LDS	JN-MN	415007
0262-16636LUP	JN-MN	415483
0262-18914LUP	JN-MN	412871!
0262-4220LPD	JN-MN	415458!
0262-4840LA	JN-MN	417082
0262-5745LUP	JN-MN	417343!
0262-6235LPD	JN-MN	417343!
0262-6883LA	JN-MN	413248
0262-7110LUP	JN-MN	415458!
0262-8468LUP	JN-MN	410708*
0262-8505LPD	JN-MN	415007
0262-9452LPD	JN-MN	412871!
02629056LUP	JN-MN	451857
0264589	HYST	417181!
0265383	HYST	41461S
0265659	HYST	JV1304
02662BR	SABO	228009
0266728	HYST	200912*=
0267538	HYST	415447
02685BR	SABO	60X90X8
0268911	HYST	417541
027021808	WHITE	370001A
0270501	EIMCO	473016!
02707-4962	WHITE	370003A
027089859	WHITE	412473
0271	INTDE	415379
0271	INTDE	415379!
02710	INTDE	472439
02710101	EIMCO	473243
02710201	EIMCO	470625!
02711	INTDE	411394!
02712	INTDE	472636!
02713	INTDE	450104
02713CK	CASE	480210!
02714	INTDE	415449!
02715	INTDE	415302
02716	INTDE	415458!
02717	INTDE	417344!
02718	INTDE	455151
02719	INTDE	417487
0272	INTDE	417356!
0272	INTDE	455188
02720401	EIMCO	472319
02720502	EIMCO	471271!
02721	INTDE	418028
02721	INTDE	455137!
02722	INTDE	415711
02723	INTDE	415187
027233	BL-KN	473215!
02724	INTDE	416137
02725	INTDE	473467
02726	INTDE	416107!
02726	INTDE	455073
02728	INTDE	417548
02729	INTDE	416666
0273	INTDE	415196!
02730301	EIMCO	415035!
02730301	EIMCO	415035
02730501	EIMCO	418028
02730501	EIMCO	455137!
02731	INTDE	417316!
02732	INTDE	417343!
02733	INTDE	473412
02734	INTDE	472234
02735	INTDE	473239
02736	INTDE	415991
02736	INTDE	455146!
02737	INTDE	417356!
02737	INTDE	455188
02738	INTDE	415045!
0274	INTDE	416888!
02740501	EIMCO	415683
0275-10044LPD	JN-MN	416706!
0275-10304LPD	JN-MN	415960
0275-10364LPD	JN-MN	416664!
0275-10635LDS	JN-MN	416664!
0275-10761LPD	JN-MN	417316!
0275-11420SS	JN-MN	417484!
0275-11894LPD	JN-MN	416664!
0275-12494LPD	JN-MN	415984!
0275-12725LPD	JN-MN	480491*
0275-14042LPD	JN-MN	416664!
0275-14694LPD	JN-MN	70X100X13
0275-14781LDS	JN-MN	416664!
0275-16242LDS	JN-MN	417316!
0275-16658SS	JN-MN	416664!*
0275-5613LPD	JN-MN	415960
0275-6140LA	JN-MN	417316!
0275-6257LPD	JN-MN	417316!
0275-7128LUP	JN-MN	417316!
0275-8436LUP	JN-MN	476281*
0275-8470LUP	JN-MN	417484!
0275-8857LPD	JN-MN	416282
0275-9732LUP	JN-MN	417316!
02750101	EIMCO	472234
02750102	EIMCO	471750!
02750200	EIMCO	415958
02750200	EIMCO	415958!
02750301	EIMCO	476838!
02750302	EIMCO	471887
02750502	EATON	471887
0275067	HYST	474272
02752	CLAYE	210914
0276	INTDE	416865!
0276603	HYST	417366!
0276983	HYST	413479
0277	INTDE	415645!
0277	INTDE	455104
0278	INTDE	415072
0279	INTDE	472185!
0279522	HYST	470682
028011	BENDI	473228
0281-11148LPD	JN-MN	417485
0281-11558LUP	JN-MN	455005
0281-18778LUP	JN-MN	475384*
028293K	JOHND	6575S
0285-10528LPD	JN-MN	417344!
0287-10004LPD	JN-MN	417344!
0287-10065LUP	JN-MN	415303!
0287-10087LPD	JN-MN	416921!
0287-10097LUP	JN-MN	417344!
0287-10165LUP	JN-MN	415303!
0287-11780LUP	JN-MN	417158!
0287-13553LPD	JN-MN	417344!
0287-17731LDS	JN-MN	415303!
0287-5956LA	JN-MN	455310
0287-6042SS	JN-MN	415303!
0287-9488LUP	JN-MN	416921!
0287-9876LPD	JN-MN	417344!
0287-9918LPD	JN-MN	417134
0289796	HYST	J1136
029-105-245	PORSC	227530
029-105-245	VW	227530
029-105-245A	PORSC	227530
029-105-245A	VW	227530
0293-11308LPD	JN-MN	417159
0293-13954LPD	JN-MN	417486
0293-4183LPD	JN-MN	416500
0293-5770LUP	JN-MN	416654!
0293-6041LA	JN-MN	416654!
0293-6108LUP	JN-MN	416956
0293-9543LPD	JN-MN	416654!
0293-9707LPD	JN-MN	455356
0293-9815LPD	JN-MN	416654!
029315174LPD	JN-MN	416500!
0295-13979SSW	JN-MN	200322
029515089LPD	JN-MN	227550
029515089LPD	JN-MN	75X100X12!
029563	ALLCH	417181!
0296-9399LPD	JN-MN	417349
0296842	HYST	415234!
0299-9998LPD	JN-MN	415995!
029HH100	DANA	710006*
02A301189	VW	710147
02RM11604004	TROS	471255!
03-01340	KEN	5M466
03-02760	KEN	411253!
03-02840	KEN	370036A
0300-10249LPD	JN-MN	417351!
0300-11074LUP	JN-MN	415995!
0300-11074LUP	JN-MN	415995!
0300-11830LUP	JN-MN	417487
0300-11830LUP	JN-MN	417487!
0300-13414LUP	JN-MN	417349!
0300-13804LPD	JN-MN	453182
0300-15153LPD	JN-MN	417350!
0300-15910LDS	JN-MN	415995!
0300-15910LDS	JN-MN	415995!
0300-16743LPD	JN-MN	453182*
0300-4360LPD	JN-MN	415088
0300-5104LPD	JN-MN	415995!
0300-5104LPD	JN-MN	415995!
0300-5961LUP	JN-MN	417349!

! Industrial Size/Type * Minor Width Difference

= The U.S. customer service number is 877-4-TIMKEN. The Canadian customer service numbers are 800-565-4927 (English) and 800-565-0438 (French-Canadian).

Mfr. No.	Name	Zero Duplication or Recommended Industrial
0300-6073LUP	JN-MN	417487
0300-6423LUP	JN-MN	415995!
0300-8506LPD	JN-MN	417488!
0300-9004LPD	JN-MN	455019!
0300-9045LUP	JN-MN	415995!
0300-9182LUP	JN-MN	415995!
0300-9343SS	JN-MN	453182
0300-9368LPD	JN-MN	417351!
03004940LA	JN-MN	415995!
0302076	FORD	240414
030326	ALLCH	473213!
030327	ALLCH	473225!
030504	ALLCH	471567!
030586	ALLCH	474276!
0306-10960LPD	JN-MN	455015
0306-5825LUP	JN-MN	55155=
03061CH	CASE	450335
03061VM	TRSCM	311189
030639200	EATON	472015!
03072SB	TRSCM	330385!
03072SC	TRSCM	330385
03072SM	TRSCM	240385
03082SZ	TRSCM	350156
03082TB	TRSCM	473096!
03092SB	TRSCM	471103!
031061SC	TRSCM	240698
031072VTBY	TRSCM	350364
031092TCN	TRSCM	50445
031101529	WHITE	417316!
031163	ALLCH	476470
031164	ALLCH	415995!
0312-10142LPD	JN-MN	416297
0312-11685LPD	JN-MN	417171!
0312-13518LDS	JN-MN	417621!
0312-6814LA	JN-MN	415021
0312-8509LUP	JN-MN	417172
0312-9092LPD	JN-MN	416288!
03123112	AU-LI	474279N
03125011LUP	JN-MN	417621!
0313-9523LPD	JN-MN	415021
0314-14644LPD	JN-MN	228010
0315-16432LUP	JN-MN	228010
0318-7227LUP	JN-MN	456105
0318-8838LPD	JN-MN	455336
0318-9193LPD	JN-MN	417490
0318-9542LPD	JN-MN	455022
032040	ROSS	471137
032046	ROSS	450593!
032048	ROSS	471224!
032049	ROSS	471750!
032052	GMC	472185!
032052	ROSS	472185!
032054	ROSS	476838!
032062	ROSS	473464!
032062	ROSS	473464
032064	ROSS	471750!
032065	ROSS	472560N!
032068	CASE	340356
032068	ROSS	240356
032069	ROSS	470625!
032073	ROSS	473313
032074	ROSS	474276!
032075	ROSS	340413
032076	FORD	240414
032076	ROSS	240414
032077	ROSS	6597S
032078	KEN	450400
032078	ROSS	450400
032079	ROSS	352541
032081	ROSS	450048
032082	ROSS	471224!
032085	ROSS	471192
032092	ROSS	340787
032110	ROSS	470712!
032151	ROSS	340413
032164	ROSS	6597S
032165	ROSS	6703S
032166	ROSS	340787
032167	ROSS	340400
032176	ROSS	470712!
032264	ROSS	471737
032341	ALLCH	415995!
032347	ALLCH	412119!
032378	ROSS	240414
032496000	EATON	410825
0325-10100LUP	JN-MN	417433!
0325-10272LPD	JN-MN	455328
0325-10305LUP	JN-MN	418028
0325-10305LUP	JN-MN	455137!
0325-11121LPD	JN-MN	417353!
0325-11497LPD	JN-MN	476470
0325-13075LUP	JN-MN	418028
0325-13241LDS	JN-MN	476470
0325-14271LPD	JN-MN	418028
0325-16539LUP	JN-MN	455566
0325-16540LUP	JN-MN	456305
0325-17972LDS	JN-MN	417181!
0325-18099LUP	JN-MN	417433!
0325-5027LUP	JN-MN	417433!
0325-6145LA	JN-MN	417181!
0325-7190LUP	JN-MN	476470
0325-8483LPD	JN-MN	417181!
0325-8845SS	JN-MN	476470
0325-8945LUP	JN-MN	415023
0325-9547LPD	JN-MN	476470
03271N	CASE	474278
0327535-1	ALLCH	204013
032784	ALLCH	474265
032785	ALLCH	417316!
032995	SPG	39879
0330779	HYST	J1118
033081	ALLCH	473438
0331-10963LPD	JN-MN	417491
0331-11523LPD	JN-MN	415085!
0331-11523LPD	JN-MN	456648
0331-12253LPD	JN-MN	416292
0331-14237LPD	JN-MN	455024
0331-15676LUP	JN-MN	416313
0331-9591LPD	JN-MN	455612=
033146	ALLCH	473238
033512	PETTI	472636!
0337-10164LUP	JN-MN	412473!
0337-11557LUP	JN-MN	417354!
0337-16541LUP	JN-MN	416294!
0337-4463LUP	JN-MN	415025*
0337-8841LUP	JN-MN	417191
0337-8841LUP	JN-MN	456585
0337-9042LUP	JN-MN	417191
0337-9042LUP	JN-MN	455165!
0337-9205LUP	JN-MN	415025
03378842LPD	JN-MN	417191
03378842LPD	JN-MN	456585
034-105-147A	VW	1108
034-115-147A	AUDI	1108
0343-10129LPD	JN-MN	417493
0343-10948LUP	JN-MN	417493
0343-6040LUP	JN-MN	417493
0343-9512LUP	JN-MN	455026
034631	CATER	471765!
034697	ALLCH	472636!
0350-10019LPD	JN-MN	415437
0350-10110LUP	JN-MN	415559
0350-10306LUP	JN-MN	417196!
0350-10773LPD	JN-MN	55309=
0350-11197LUP	JN-MN	415991
0350-11197LUP	JN-MN	455146!
0350-12565LDS	JN-MN	415991
0350-12565LDS	JN-MN	415991!
0350-15810LUP	JN-MN	415027
0350-16542LUP	JN-MN	417495
0350-17475LDS	JN-MN	415027
0350-17593LDS	JN-MN	415027
0350-17779LDS	JN-MN	415027
0350-4941LUP	JN-MN	415991
0350-4941LUP	JN-MN	455146!
0350-6301LA	JN-MN	417496
0350-6327LA	JN-MN	417196!
0350-6871LUP	JN-MN	417496
0350-7325LUP	JN-MN	416624!*
0350-8501LPD	JN-MN	417198
0350-8821LPD	JN-MN	415437
0350-8821LPD	JN-MN	415437!
0350-8999LPD	JN-MN	417496
0350-9410LUP	JN-MN	415027
0350-9410LUP	JN-MN	415027!
0350-9422LUP	JN-MN	415991
0350-9422LUP	JN-MN	455146!
0350-9752LUP	JN-MN	415991
0350-9752LUP	JN-MN	455146!
03511008	SPICE	254270
0354-13160LPD	JN-MN	90X120X12
0356-16543LUP	JN-MN	415498
0356-9892LUP	JN-MN	415711
0360CU	CASE	471224
0361017	LILIS	471192
0362-11198LUP	JN-MN	416332!
0362-12159LPD	JN-MN	415937!
0362-12677LDS	JN-MN	415937!
0362-12718LPD	JN-MN	415832
0362-15724LUP	JN-MN	417355!
0362-20032LUP	JN-MN	416125!
0362-5140SS	JN-MN	456744N
0362-8438LPD	JN-MN	417500
0362-9587LPD	JN-MN	416125!
036727F	SPERY	204013
0368-15929LUP	JN-MN	417501
0368-18532LUP	JN-MN	416670
0368-6808LA	JN-MN	417501
0368-8502LUP	JN-MN	55030
037051VC	TRSCM	340827
0370932	BE-AR	35127
0371-9729LUP	JN-MN	415379!
0371-9729LUP	JN-MN	415379
03717CS	CASE	240319
0372CK	CASE	471649!
0374295	BE-AR	25598
0375-10057LUP	JN-MN	416339
0375-10057LUP	JN-MN	455031!
0375-10846SS	JN-MN	415379
0375-10859LPD	JN-MN	416339
0375-10859LPD	JN-MN	455031!
0375-12115LPD	JN-MN	415379
0375-12115LPD	JN-MN	415379!
0375-13770LUP	JN-MN	415150!
0375-14443LDS	JN-MN	415379
0375-14443LDS	JN-MN	415379!
0375-17199LDS	JN-MN	415379
0375-17199LDS	JN-MN	415379!
0375-40001LDS	JN-MN	415379
0375-40001LDS	JN-MN	415379!
0375-6294LA	JN-MN	416339
0375-6294LA	JN-MN	455031!
0375-6872LPD	JN-MN	415379
0375-6872LPD	JN-MN	415379!
0375-7146LUP	JN-MN	415379!
0375-7146LUP	JN-MN	415379
037511040LPD	JN-MN	417205!
037675	ALLCH	415001!
037676	ALLCH	472924!
0381-12156LUP	JN-MN	417504
0381-16544LUP	JN-MN	455189
0381-7014LA	JN-MN	455032!
0381-9762LUP	JN-MN	455178=
03820197	CHRYS	493291
03866AB	CASE	415458!
03868AB	CASE	473215!
0387-11177LPD	JN-MN	456618
0387-12409LPD	JN-MN	415697!
0387-12409LPD	JN-MN	455547
0387-12654LPD	JN-MN	417210!
0387-15641LPD	JN-MN	417210!
0387-16269LDS	JN-MN	417210!
0387-16545LUP	JN-MN	415958
0387-16546LUP	JN-MN	417505
0387-6218LUP	JN-MN	416345!
0387-6218LUP	JN-MN	455033
0387-9764LUP	JN-MN	417211!
03873AB	CASE	417344!
03896N	CASE	471744!
03899AB	CASE	472185!
0390003	BE-AR	35094
0390025	BE-AR	35316
0390059	BE-AR	35548
0390061	BE-AR	35315
0390086	BE-AR	35547
0390088	BE-AR	35361
0390090	BE-AR	35316
0390106	HYST	417247!
0390119	BE-AR	35327
0393-11669LPD	JN-MN	455191
0393-12357LDS	JN-MN	415263
0393-5910LPD	JN-MN	415034!*
0393-6072LUP	JN-MN	455191
0393-8503LPD	JN-MN	415263
0393-8504LUP	JN-MN	417506
0393-9402LUP	JN-MN	415034!
0397-10950LPD	JN-MN	415187
04-9012430	WHITE	HU024A
04-9023110	WHITE	370023A
04-9038204	WHITE	370030A
04-BRS0-400-300-7CW	TROS	415995
0400-10285LPD	JN-MN	415036
0400-10384LPD	JN-MN	415036
0400-11119LPD	JN-MN	417356!
0400-11119LPD	JN-MN	455188
0400-11500LPD	JN-MN	415035
0400-11635LPD	JN-MN	417356!
0400-11635LPD	JN-MN	455188
0400-13292LPD	JN-MN	415187
0400-14959LPD	JN-MN	415187
0400-15141LDS	JN-MN	415035
0400-16751LUP	JN-MN	416130!
0400-4784LPD	JN-MN	415041
0400-5489LPD	JN-MN	417357
0400-5489LPD	JN-MN	455192!
0400-60003LDS	JN-MN	417507
0400-6146LUP	JN-MN	415035
0400-6146LUP	JN-MN	415035!
0400-7130LA	JN-MN	415036
0400-7195LUP	JN-MN	415036
0400-7199LUP	JN-MN	415035
0400-7199LUP	JN-MN	415035!
0400-9143LUP	JN-MN	457294*
0400-9151LPD	JN-MN	415041
0400-9342SS	JN-MN	415035
0400-9663LPD	JN-MN	417509
0400-9705LPD	JN-MN	417223
0400-9866LUP	JN-MN	415035

! Industrial Size/Type * Minor Width Difference

= The U.S. customer service number is 877-4-TIMKEN. The Canadian customer service numbers are 800-565-4927 (English) and 800-565-0438 (French-Canadian).

Mfr. No.	Name	Zero Duplication or Recommended Industrial
0400-9866LUP	JN-MN	415035!
04002002.5	TROS	240698
040211	ALLCH	474281!
040302	ALLCH	471442!
04032AB	CASE	415035
04032AB	CASE	415035!
04041AB	CASE	415001!
04045AB	CASE	415458!
04047	CASE	473467!
04048AB	CASE	472185!
0406-15574LUP	JN-MN	455037
04061VC	TRSCM	343101
04081VM	TRSCM	474279N
04082SM	TRSCM	240470
04082SM	TRSCM	472810!
040832	EVERS	411253!
04092VB	TRSCM	6863S!
04093SB	TRSCM	6863S!
04104	JAC	471554!
04112SL	TRSCM	474277
0412-10382LPD	JN-MN	415142
0412-11120LPD	JN-MN	415043
0412-11194LPD	JN-MN	415142
0412-11739LPD	JN-MN	415142
0412-11790LUP	JN-MN	417511
0412-14444LDS	JN-MN	415142
0412-17228LUP	JN-MN	455134!
0412-20013LPD	JN-MN	415043
0412-6582LUP	JN-MN	417512
0412-9649LPD	JN-MN	415142
041516	ALLCH	471570!
041798	ALLCH	415187
0418-11517LPD	JN-MN	455625=
0418-11643LPD	JN-MN	417516
0418-12122LPD	JN-MN	455194
0418-16547LUP	JN-MN	417515
0418-18564LPD	JN-MN	417513
0418-6263LA	JN-MN	415295
0418-8808LUP	JN-MN	417513
0418-9800LPD	JN-MN	455194
042024	ALLCH	472015!
04240AB	CASE	472287!
04243AB	CASE	471554!
04244AB	CASE	471466!
0425-10073LPD	JN-MN	416556!
0425-10073LPD	JN-MN	472157
0425-10334LPD	JN-MN	416891!
0425-11140SS	JN-MN	416556!
0425-11140SS	JN-MN	472157
0425-11758LUP	JN-MN	55333=
0425-13772LPD	JN-MN	415058
0425-15628LDS	JN-MN	416891!
0425-16598LUP	JN-MN	416135!
0425-7040LUP	JN-MN	472157!
0425-7040LUP	JN-MN	472157
0425-7187LUP	JN-MN	472157!
0425-7187LUP	JN-MN	472157
0425-8809LPD	JN-MN	415045!
0425-8810LUP	JN-MN	416137
0425-8946LPD	JN-MN	416891!
0425-9930LUP	JN-MN	415196!
04253AB1	CASE	417492
0431-16548LUP	JN-MN	455197N
0431-7192LPD	JN-MN	417520
0431-9545LPD	JN-MN	417238
0433-16433LUP	JN-MN	110X130X12
043569	ALLCH	470950!
043569	ALLCH	6241S
043570	ALLCH	450273
0437-10470LPD	JN-MN	415047
0437-10482LPD	JN-MN	415047
0437-19127LDS	JN-MN	416147
0437-8875LUP	JN-MN	415196!
0437-9418LPD	JN-MN	415425
0437-9590LPD	JN-MN	415060
0437-9590LPD	JN-MN	455060
04381AB	CASE	471567!
043838	GEHL	470088
043839	GEHL	471192
04384188	CHRYS	9316
04399	JAC	481537
04399A	JAC	481537
04402005	TROS	50883=
04402402.5	TROS	311189
04403201.5	TROS	342805
04403202	TROS	342805
044208	GEHL	412920!
0443-10332LPD	JN-MN	55199=
0443-8460LUP	JN-MN	55199=
0443-8825LUP	JN-MN	417525
044594	HESST	472193!
044741	ALLCH	471763
044800	HESST	471765!
044818	HESST	471760
044852	ALLCH	417316!
044859	GEHL	472015!
0450-11709LUP	JN-MN	416892!
0450-11832LUP	JN-MN	416153!
0450-13172LDS	JN-MN	416888!
0450-18396LUP	JN-MN	416154!
0450-4519LUP	JN-MN	416888!
0450-5991LUP	JN-MN	417532
0450-6538LPD	JN-MN	416154!
0450-7145LPD	JN-MN	416892!
0450-7191LPD	JN-MN	416892!
0450-7360LPD	JN-MN	415351!
0450-9170LUP	JN-MN	416888!
0450-9425SS	JN-MN	416892!*
0450-9664LUP	JN-MN	416154!
04504168LUP	JN-MN	327303!
04506100LPD	JN-MN	416153!
0452-16926LPD	JN-MN	115X140X12
0456-15070LPD	JN-MN	417533
0456-16816LUP	JN-MN	417533
0461006	LILIS	204035
04612AB	CASE	470530!
0461CS	CASE	450311
0462-10132LPD	JN-MN	415371
0462-10154LUP	JN-MN	456641*
0462-11368LUP	JN-MN	416156
0462-13173LDS	JN-MN	416156
0462-16605LUP	JN-MN	456641
0462-5193LPD	JN-MN	416156*
0462-5594LUP	JN-MN	415371
0462-6677LA	JN-MN	455685
0462-8811LUP	JN-MN	415064
0462-9361LPD	JN-MN	416158
0467SC	CASE	240735
0468-12861LPD	JN-MN	415284
0468-6743LA	JN-MN	417536
0468-8478LPD	JN-MN	415284
0468-8900LPD	JN-MN	415284
0468SC	CASE	240735
047046	ALLCH	472394
047047	ALLCH	473228
0472-15209LUP	JN-MN	120X160X12
047275	ALLCH	417316!
04736	JAC	450398
04736	JAC	471267!
04741908	CHRYS	713103
047436	ALLCH	476470!
047436	ALLCH	476470
04746772	CHRYS	5778V
0475-10841LPD	JN-MN	455375=
0475-11226LPD	JN-MN	417538
0475-11804LPD	JN-MN	415066
0475-6085LPD	JN-MN	415066
0475-6935LPD	JN-MN	417247!
0475-7107LA	JN-MN	415066
0475-9820LPD	JN-MN	415138!
0475-9963LPD	JN-MN	415138!
047852	GEHL	471818
04801604	TROS	350435
04802004	TROS	350364
04802404	TROS	330385!
04803202	TROS	43095S!
0481-11060LPD	JN-MN	456890
048115147	PORSC	710331
0486060	FORD	450188
0486073	FORD	470954
0486080	FORD	415449!
0486325	FORD	472560N!
0486452	FORD	55386
048689	ALLCH	471141!
048692	ALLCH	471766!
0487-15067LUP	JN-MN	416167!
0487-15801LDS	JN-MN	416167!
0487-7234LPD	JN-MN	417269!
0487-8925LPD	JN-MN	417267
0487-9797LPD	JN-MN	417269!
0487014	FORD	471224!
048703	ALLCH	415449!
0487052	FORD	415035!
0487052	FORD	415035
0487066	FORD	471103!
0487067	FORD	45187S
0487068	FORD	471442!
0487073	FORD	416865!
0487086	FORD	471281!
0487088	FORD	471466!
0487095	FORD	417020
0487108	FORD	471551!
0487134	FORD	471570!
0487142	FORD	471651
0487162	FORD	476838!
048717	ALLCH	471762!
0487176	FORD	473426
048718	ALLCH	472826!
0487188	FORD	471766!
048719	ALLCH	473436
0487196	FORD	471354!
048720	ALLCH	471785!
048720	FORD	471554!
0487234	FORD	455136
048726	ALLCH	471646!
0487296	FORD	470625!
048730	ALLCH	473228
0487302	FORD	470059
0487302	FORD	470380!
048731	ALLCH	471689!
0487310	FORD	471820
0487336	FORD	472439
0487340	FORD	474265
0487372	FORD	472144!
0487374	FORD	450084!
0487398	FORD	412119!
0487402	FORD	416444
0487414	FORD	415001!
0487422	FORD	417316!
0487440	FORD	412473!
0487450	FORD	416332!
0487494	FORD	415138!
0487514	FORD	417273
04897297AA	CHRYS	713103
0493-12773LPD	JN-MN	417539!
0493-7144LPD	JN-MN	417539!
0493-8801LPD	JN-MN	417539!
0493-9159LPD	JN-MN	417273
0493-9400LPD	JN-MN	417273
0493-9600LPD	JN-MN	417273
04933AB	CASE	450474
049453	ALLCH	417357
049453	ALLCH	455192!
049489	ALLCH	473214!
049490	ALLCH	471224!
049521	ALLCH	471785!
049522	ALLCH	473436
049629	ALLCH	471224!
04981	JAC	471652
05-03700	KEN	471141!
0500-10201LPD	JN-MN	416865!
0500-12367LPD	JN-MN	417543
0500-16740LDS	JN-MN	415725!
0500-17959LDS	JN-MN	416865!
0500-18134LDS	JN-MN	416865!
0500-5907LPD	JN-MN	416865!
0500-6325LUP	JN-MN	416865!
0500-6671LUP	JN-MN	417541
0500-8956LPD	JN-MN	417542
0500-9044LUP	JN-MN	417541
0500-9530LUP	JN-MN	415725!
0500-9629LUP	JN-MN	415725!
05009	NAK	25X48X8
05009530LPD	JN-MN	415725!
05015CS	CASE	472560N
050320	WHITE	473475
050368100	EATON	240319
0504-7489	GM	417520
050441	ALLCH	471267!
050443	ALLCH	415449!
0506-5148LPD	JN-MN	455290*
05071VB	TRSCM	340847!
05071VB	TRSCM	8792S
05081VC	TRSCM	342613!
050821VAY	TRSCM	330699
05082SZ	TRSCM	330699!
05082TB	TRSCM	330699!
05082VAY	TRSCM	340771
05082VB	TRSCM	342613!
05086AB	CASE	471224!
05092TB	TRSCM	471442
05092TB	TRSCM	471442!
0511-15033LPD	JN-MN	130X160X12
0511-18529LUP	JN-MN	130X160X12
05112TB	TRSCM	471526!
05113SA	TRSCM	471281!
051145	ALLCH	417205!
05115	JAC	450557
05115	JAC	471255!
051154200	EATON	415064
0512-10017LPD	JN-MN	417546!
0512-13595LDS	JN-MN	417546!
0512-7335LPD	JN-MN	417547
051206	GEHL	471766
05122SB	TRSCM	471472!
05122SB	TRSCM	5133
05122TC	TRSCM	471472
05132SB	TRSCM	471549!
05134TA	TRSCM	471551!
051461	ALLCH	476470!
051461	ALLCH	476470
051461	SPICE	476470!
051461	SPICE	476470
05152B	CASE	340413
051568	ALLCH	471224
0518-7336LPD	JN-MN	417548
0518-8826LPD	JN-MN	417548
051810	VICK	350364

! Industrial Size/Type * Minor Width Difference

= The U.S. customer service number is 877-4-TIMKEN. The Canadian customer service numbers are 800-565-4927 (English) and 800-565-0438 (French-Canadian).

Mfr. No.	Name	Zero Duplication or Recommended Industrial
051815	*VICK*	**330385**!
051825	*VICK*	**472810**!
051835	*VICK*	**471472**!
051840	*VICK*	**471535**!
051850	*VICK*	**471538**!
051860	*VICK*	**471267**!
05187AB	*CASE*	**471570**!
05187AB-D	*CASE*	**471570**!
052-0056	*BE-AR*	1196
052-0072	*BE-AR*	227235
052-0098	*BE-AR*	1192
052-0122	*BE-AR*	1996
052-0148	*BE-AR*	**473238**!
052-0155	*BE-AR*	482126
052-0189	*BE-AR*	1110
052-0197	*BE-AR*	1110
052-0205	*BE-AR*	**471224**!
052-0221	*BE-AR*	239128
052-0239	*BE-AR*	5778
052-0270	*BE-AR*	**470487**!
052-0288	*BE-AR*	239127
052-0296	*BE-AR*	**473454**
052-0312	*BE-AR*	**473454**
052-0346	*BE-AR*	**471224**!
052-0379	*BE-AR*	9161
052-0403	*BE-AR*	224320
052-0437	*BE-AR*	1192
052-0460	*BE-AR*	**472397**!
052-0478	*BE-AR*	**472164**!
052-0593	*BE-AR*	**473238**!
052-0593	*BE-AR*	9912
052-0627	*BE-AR*	1873
052-0635	*BE-AR*	**473228**!
052-0643	*BE-AR*	239129
052-0676	*BE-AR*	**473234**!
052-0700	*BE-AR*	710189
052-0726	*BE-AR*	**472164**!
052-0767	*BE-AR*	**472492**!
052-0809	*BE-AR*	**472397**!
052-0841	*BE-AR*	**471224**!
052-0890	*BE-AR*	**471192**
052-1146	*BE-AR*	224025
052-1161	*BE-AR*	**472213**
052-1187	*BE-AR*	1994
052-1245	*BE-AR*	3771
052-1328	*BE-AR*	710324
052-1369	*BE-AR*	1195
052-1401	*BE-AR*	1167
052-1434	*BE-AR*	1183
052-1435	*BE-AR*	1977
052-1450	*BE-AR*	1188
052-1468	*BE-AR*	1188
052-1484	*BE-AR*	1183
052-1542	*BE-AR*	1974
052-1658	*BE-AR*	1979
052-1773	*BE-AR*	58X72X8
052-1781	*BE-AR*	1996
052-1799	*BE-AR*	1984
052-1872	*BE-AR*	224252
052-1930	*BE-AR*	1906
052-2003	*BE-AR*	1021V
052-2003	*BE-AR*	BS40265
052-2037	*BE-AR*	223014
052-2052	*BE-AR*	223535
052-2060	*BE-AR*	223014
052-2086	*BE-AR*	1960
052-2128	*BE-AR*	224052
052-2177	*BE-AR*	227045
052-2193	*BE-AR*	228010
052-2201	*BE-AR*	1956
052-2250	*BE-AR*	710329
052-2268	*BE-AR*	227410
052-2284	*BE-AR*	1952
052-2334	*BE-AR*	**472439***
052-2359	*BE-AR*	3698
052-2359	*BE-AR*	BS40382
052-2367	*BE-AR*	1950
052-2391	*BE-AR*	228005
052-2433	*BE-AR*	1992
052-2441	*BE-AR*	473823
052-2466	*BE-AR*	1949
052-2474	*BE-AR*	473812
052-2482	*BE-AR*	**473179**!
052-2508	*BE-AR*	228020
052-2524	*BE-AR*	1128
052-2649	*BE-AR*	1999
052-2664	*BE-AR*	1959
052-2680	*BE-AR*	226285
052-2680	*BE-AR*	62X85X8!
052-2706	*BE-AR*	1959
052-2714	*BE-AR*	710331
052-2722	*BE-AR*	1108
052-2748	*BE-AR*	**473367**
052-2763	*BE-AR*	710315
052-2771	*BE-AR*	223580
052-2789	*BE-AR*	1981
052-2797	*BE-AR*	227409
052-2813	*BE-AR*	1147
052-2854	*BE-AR*	1960
052-2862	*BE-AR*	223535
052-2870	*BE-AR*	224100
052-2888	*BE-AR*	474134
052-2896	*BE-AR*	227230
052-2904	*BE-AR*	494122
052-2946	*BE-AR*	1126
052-2961	*BE-AR*	482126
052-3001	*BE-AR*	1176
052-3043	*BE-AR*	1906
052-3092	*BE-AR*	1938
052-3100	*BE-AR*	494117
052-3118	*BE-AR*	222540
052-3126	*BE-AR*	222220
052-3134	*BE-AR*	1943
052-3136	*BE-AR*	1177
052-3139	*BE-AR*	3476
052-3140	*BE-AR*	716445
052-3147	*BE-AR*	222242
052-3149	*BE-AR*	1217
052-3152	*BE-AR*	1967
052-3153	*BE-AR*	1209
052-3155	*BE-AR*	1195
052-3158	*BE-AR*	1962
052-3161	*BE-AR*	2002
052-3167	*BE-AR*	2016
052-3168	*BE-AR*	2003N!
052-3169	*BE-AR*	1173
052-3170	*BE-AR*	32X58X8!
052-3171	*BE-AR*	2016
052-3173	*BE-AR*	712011
052-3174	*BE-AR*	1979
052-3175	*BE-AR*	444116
052-3176	*BE-AR*	1884
052-3184	*BE-AR*	710076
052-3186	*BE-AR*	494117
052-3189	*BE-AR*	1939
052-3191	*BE-AR*	229210
052-3192	*BE-AR*	1172
052-3192	*BE-AR*	TCS45725
052-3193	*BE-AR*	1884
052-3196	*BE-AR*	4990
052-3197	*BE-AR*	710323
052-3199	*BE-AR*	1019
052-3199	*BE-AR*	BS40387
052-3200	*BE-AR*	1038
052-3201	*BE-AR*	331227H
052-3202	*BE-AR*	3394
052-3204	*BE-AR*	3945
052-3205	*BE-AR*	**473573**
052-3208	*BE-AR*	**473258**
052-3210	*BE-AR*	228005
052-3212	*BE-AR*	223540
052-3214	*BE-AR*	228010
052-3214	*BE-AR*	BS40252
052-3215	*BE-AR*	229005
052-3215	*BE-AR*	229006
052-3218	*BE-AR*	229005
052-3218	*BE-AR*	BS16144
052-3221	*BE-AR*	1906
052-3222	*BE-AR*	3772
052-3223	*BE-AR*	**473454**
052-3224	*BE-AR*	227410
052-3224	*BE-AR*	BS40268
052-3225	*BE-AR*	1990
052-3227	*BE-AR*	334111
052-3228	*BE-AR*	228410
052-3229	*BE-AR*	223602
052-3230	*BE-AR*	228010
052-3231	*BE-AR*	1986
052-3232	*BE-AR*	222540
052-3234	*BE-AR*	224835
052-3235	*BE-AR*	224460
052-3236	*BE-AR*	474161
052-3239	*BE-AR*	481826
052-3239	*BE-AR*	4989
052-3241	*BE-AR*	474134
052-3242	*BE-AR*	1126
052-3243	*BE-AR*	224026
052-3244	*BE-AR*	225650
052-3245	*BE-AR*	1985
052-3247	*BE-AR*	2025
052-3249	*BE-AR*	716102
052-3250	*BE-AR*	716102
052-3251	*BE-AR*	1177
052-3252	*BE-AR*	223801!
052-3253	*BE-AR*	223842
052-3254	*BE-AR*	1177
052-3256	*BE-AR*	1960
052-3257	*BE-AR*	1176
052-3258	*BE-AR*	227045
052-3259	*BE-AR*	1956
052-3261	*BE-AR*	413818
052-3265	*BE-AR*	710060
052-3265	*BE-AR*	BS40449
052-3268	*BE-AR*	1209
052-3269	*BE-AR*	225500
052-3270	*BE-AR*	239201
052-3271	*BE-AR*	1960
052-3273	*BE-AR*	3677
052-3274	*BE-AR*	4099
052-3277	*BE-AR*	1973
052-3280	*BE-AR*	223035
052-3281	*BE-AR*	5695
052-3284	*BE-AR*	**3395**!
052-3285	*BE-AR*	3771
052-3286	*BE-AR*	228010
052-3286	*BE-AR*	BS40252
052-3288	*BE-AR*	223340
052-3289	*BE-AR*	223420
052-3290	*BE-AR*	1973
052-3295	*BE-AR*	239134
052-3296	*BE-AR*	1939
052-3298	*BE-AR*	224462
052-3301	*BE-AR*	3772
052-3302	*BE-AR*	3476
052-3303	*BE-AR*	225230
052-3304	*BE-AR*	225082
052-3306	*BE-AR*	223018
052-3308	*BE-AR*	1174
052-3309	*BE-AR*	225875
052-3310	*BE-AR*	225650*
052-3311	*BE-AR*	224220
052-3312	*BE-AR*	222510
052-3315	*BE-AR*	225650
052-3316	*BE-AR*	228009
052-3318	*BE-AR*	224400
052-3321	*BE-AR*	225530
052-3323	*BE-AR*	229005
052-3324	*BE-AR*	223012
052-3324	*BE-AR*	TCS45724
052-3328	*BE-AR*	710097
052-3329	*BE-AR*	710331
052-3330	*BE-AR*	710332
052-3331	*BE-AR*	320595
052-3332	*BE-AR*	228015
052-3333	*BE-AR*	710215
052-3335	*BE-AR*	5700
052-3336	*BE-AR*	225650
052-3337	*BE-AR*	716102
052-3338	*BE-AR*	710072
052-3340	*BE-AR*	224772
052-3341	*BE-AR*	1937
052-3343	*BE-AR*	1180
052-3344	*BE-AR*	710092
052-3345	*BE-AR*	1948
052-3346	*BE-AR*	222630
052-3347	*BE-AR*	224254
052-3348	*BE-AR*	710098
052-3349	*BE-AR*	225225
052-3350	*BE-AR*	710148
052-3351	*BE-AR*	473677
052-3352	*BE-AR*	1975
052-3354	*BE-AR*	239155
052-3355	*BE-AR*	225035
052-3356	*BE-AR*	1953
052-3357	*BE-AR*	482126
052-3360	*BE-AR*	482126
052-3361	*BE-AR*	473677
052-3362	*BE-AR*	224520
052-3363	*BE-AR*	224520
052-3365	*BE-AR*	716102
052-3366	*BE-AR*	1994
052-3369	*BE-AR*	1174
052-3370	*BE-AR*	1936
052-3371	*BE-AR*	710126
052-3372	*BE-AR*	710073
052-3374	*BE-AR*	225875
052-3376	*BE-AR*	1973
052-3377	*BE-AR*	710094
052-3379	*BE-AR*	710310
052-3380	*BE-AR*	710310
052-3381	*BE-AR*	224820
052-3382	*BE-AR*	223840
052-3383	*BE-AR*	710152
052-3385	*BE-AR*	224560
052-3386	*BE-AR*	223831
052-3387	*BE-AR*	225650
052-3388	*BE-AR*	710308
052-3389	*BE-AR*	223520!
052-3391	*BE-AR*	3771
052-3392	*BE-AR*	228700
052-3395	*BE-AR*	3227
052-3396	*BE-AR*	9613S
052-3397	*BE-AR*	710107
052-3398	*BE-AR*	710072
052-3399	*BE-AR*	710093
052-3400	*BE-AR*	223550
052-3401	*BE-AR*	222240
052-3402	*BE-AR*	710126

! Industrial Size/Type * Minor Width Difference

Mfr. No.	Name	Zero Duplication or Recommended Industrial
052-3403	BE-AR	4898
052-3404	BE-AR	473677
052-3405	BE-AR	225872
052-3406	BE-AR	224510
052-3407	BE-AR	239128
052-3408	BE-AR	710108
052-3412	BE-AR	710168
052-3414	BE-AR	3459
052-3415	BE-AR	320583
052-3416	BE-AR	223845
052-3416	BE-AR	224462
052-3417	BE-AR	224462
052-3418	BE-AR	1974
052-3421	BE-AR	224020
052-3422	BE-AR	224205
052-3423	BE-AR	1981
052-3424	BE-AR	228008
052-3425	BE-AR	1120
052-3426	BE-AR	223220
052-3427	BE-AR	320564
052-3428	BE-AR	228009
052-3429	BE-AR	473823
052-3429	BE-AR	710305
052-3430	BE-AR	1960
052-3431	BE-AR	225673
052-3432	BE-AR	4898
052-3433	BE-AR	710131
052-3434	BE-AR	1964
052-3435	BE-AR	223830
052-3436	BE-AR	1928
052-3437	BE-AR	1993
052-3438	BE-AR	225673
052-3440	BE-AR	224235
052-3441	BE-AR	226530
052-3442	BE-AR	710070
052-3443	BE-AR	225082*
052-3444	BE-AR	225230
052-3447	BE-AR	1941
052-3448	BE-AR	225875
052-3449	BE-AR	225020
052-3449	BE-AR	TCS45727
052-3450	BE-AR	222556
052-3452	BE-AR	225008
052-3453	BE-AR	225535
052-3454	BE-AR	224200
052-3455	BE-AR	710158
052-3456	BE-AR	710159
052-3457	BE-AR	473812
052-3458	BE-AR	225450
052-3459	BE-AR	**473179**!
052-3460	BE-AR	1012N
052-3460	BE-AR	224662
052-3461	BE-AR	4904
052-3462	BE-AR	710175
052-3463	BE-AR	710239
052-3464	BE-AR	224820
052-3465	BE-AR	225230
052-3466	BE-AR	3771
052-3468	BE-AR	228010
052-3469	BE-AR	710193
052-3470	BE-AR	222267
052-3472	BE-AR	710234
052-3473	BE-AR	710194
052-3474	BE-AR	1953
052-3475	BE-AR	710192
052-3476	BE-AR	320595
052-3478	BE-AR	223420
052-3479	BE-AR	710228
052-3480	BE-AR	224066
052-3481	BE-AR	239146
052-3483	BE-AR	5694
052-3484	BE-AR	1174
052-3485	BE-AR	226150
052-3486	BE-AR	710178*
052-3487	BE-AR	710266
052-3488	BE-AR	494123*
052-3490	BE-AR	1932
052-3491	BE-AR	710191
052-3492	BE-AR	710176*
052-3493	BE-AR	4899
052-3494	BE-AR	224870
052-3495	BE-AR	225775
052-3496	BE-AR	1974
052-3497	BE-AR	225275
052-3499	BE-AR	1935
052-3500	BE-AR	226610
052-3501	BE-AR	225010
052-3502	BE-AR	225010
052-3503	BE-AR	223802
052-3504	BE-AR	222745
052-3505	BE-AR	222745
052-3506	BE-AR	223540
052-3507	BE-AR	710124
052-3508	BE-AR	1036
052-3509	BE-AR	223050
052-3510	BE-AR	223050
052-3513	BE-AR	223543!
052-3514	BE-AR	710118
052-3515	BE-AR	710134
052-3516	BE-AR	223543!
052-3517	BE-AR	223580
052-3518	BE-AR	710332
052-3518	BE-AR	TCS45719
052-3519	BE-AR	710150
052-3520	BE-AR	2007N
052-3521	BE-AR	223240
052-3522	BE-AR	710109
052-3523	BE-AR	710110
052-3525	BE-AR	710110
052-3526	BE-AR	223540
052-3527	BE-AR	712551
052-3528	BE-AR	710112
052-3529	BE-AR	223540
052-3531	BE-AR	224066
052-3532	BE-AR	223543!
052-3533	BE-AR	223543!
052-3534	BE-AR	223553
052-3537	BE-AR	710123
052-3541	BE-AR	224052
052-3542	BE-AR	225545
052-3545	BE-AR	224045
052-3547	BE-AR	710199
052-3549	BE-AR	224520
052-3550	BE-AR	1147
052-3552	BE-AR	710122
052-3554	BE-AR	5604
052-3556	BE-AR	224026
052-3557	BE-AR	223542
052-3558	BE-AR	710110
052-3559	BE-AR	710109
052-3560	BE-AR	710109
052-3562	BE-AR	710132
052-3563	BE-AR	710133
052-3564	BE-AR	224026
052-3565	BE-AR	710435
052-3566	BE-AR	710127
052-3568	BE-AR	710176
052-3569	BE-AR	710225
052-3570	BE-AR	4899
052-3571	BE-AR	710183
052-3572	BE-AR	710182
052-3575	BE-AR	710130
052-3576	BE-AR	710129
052-3580	BE-AR	223535
052-3581	BE-AR	223552
052-3582	BE-AR	223018
052-3583	BE-AR	224840
052-3586	BE-AR	225673
052-3589	BE-AR	224020
052-3590	BE-AR	229210
052-3591	BE-AR	223802
052-3592	BE-AR	225010
052-3593	BE-AR	225010
052-3595	BE-AR	223543!
052-3596	BE-AR	710240
052-3597	BE-AR	4175
052-3599	BE-AR	710060
052-3600	BE-AR	712008
052-3601	BE-AR	229010
052-3602	BE-AR	320595
052-3603	BE-AR	710229
052-3604	BE-AR	710231
052-3605	BE-AR	1181
052-3606	BE-AR	710289
052-3607	BE-AR	224052
052-3608	BE-AR	1940
052-3609	BE-AR	710288
052-3610	BE-AR	1019
052-3612	BE-AR	229210
052-3613	BE-AR	710373
052-3614	BE-AR	710166
052-3615	BE-AR	710112
052-3616	BE-AR	223750
052-3617	BE-AR	228250
052-3618	BE-AR	224660
052-3619	BE-AR	224460
052-3620	BE-AR	224052
052-3621	BE-AR	710292
052-3622	BE-AR	710439
052-3623	BE-AR	1217
052-3624	BE-AR	3459
052-3625	BE-AR	229005
052-3626	BE-AR	350609
052-3627	BE-AR	223540
052-3628	BE-AR	1979
052-3629	BE-AR	223230
052-3630	BE-AR	224205
052-3631	BE-AR	1979
052-3632	BE-AR	713771
052-3633	BE-AR	223802
052-3634	BE-AR	223750
052-3635	BE-AR	3771
052-3636	BE-AR	224460
052-3637	BE-AR	710288
052-3638	BE-AR	710290
052-3639	BE-AR	710436
052-3640	BE-AR	710236
052-3642	BE-AR	710306
052-3643	BE-AR	223608
052-3646	BE-AR	224210
052-3647	BE-AR	223840*
052-3647	BE-AR	710319
052-3648	BE-AR	1987
052-3649	BE-AR	1990
052-3650	BE-AR	222330
052-3652	BE-AR	223750
052-3653	BE-AR	223010
052-3654	BE-AR	224052
052-3655	BE-AR	710271
052-3656	BE-AR	710188
052-3657	BE-AR	710189
052-3658	BE-AR	710415
052-3659	BE-AR	224650
052-3660	BE-AR	**473179**
052-3661	BE-AR	223018
052-3662	BE-AR	225230
052-3663	BE-AR	1932
052-3664	BE-AR	710143
052-3665	BE-AR	223552
052-3666	BE-AR	223018
052-3667	BE-AR	225460
052-3668	BE-AR	710109
052-3669	BE-AR	710289
052-3671	BE-AR	**473179**
052-3672	BE-AR	710293
052-3673	BE-AR	710394
052-3674	BE-AR	710289
052-3675	BE-AR	227235
052-3676	BE-AR	710324
052-3677	BE-AR	1974
052-3678	BE-AR	710226
052-3679	BE-AR	710125
052-3680	BE-AR	710394
052-3687	BE-AR	712938
052-3710	BE-AR	226285
052-3713	BE-AR	710352
052-3715	BE-AR	710332
052-3715	SPG	710332
052-3717	BE-AR	710255
052-3733	BE-AR	BS40667
052-3735	BE-AR	231004
052-3736	BE-AR	231052
052-3739	BE-AR	4249
052-3741	BE-AR	710356
052-3742	BE-AR	710060
052-3743	BE-AR	710302
052-3744	BE-AR	2012V
052-3925	BE-AR	229005
0520023	BE-AR	224835
0520023	BE-AR	48X68X10!
0520031	BE-AR	224835
0520031	BE-AR	48X68X10!
0520064	BE-AR	1955
0520064	BE-AR	52X65X9!
0520114	BE-AR	1012
0520114	BE-AR	1012N
0520114	BE-AR	45X62X8!
0520130	BE-AR	1174
0520130	BE-AR	38X52X8.5!
0520163	BE-AR	224045
0520163	BE-AR	40X62X12!
0520536	BE-AR	223510
0520536	BE-AR	35X47X7!
0520544	BE-AR	239146
0520544	BE-AR	38X54X7!
0520684	BE-AR	224820
0520684	BE-AR	48X62X8!
0520817	BE-AR	1174
0520817	BE-AR	38X52X8.5!
0520957	BE-AR	1214
0520957	BE-AR	1214N
0520965	BE-AR	**1213N**
0521088	BE-AR	2001
0521088	BE-AR	60X82X12!
0521088	BE-AR	BS27493
0521096	BE-AR	2001
0521096	BE-AR	60X82X12!
0521096	BE-AR	BS27493
0521112	BE-AR	228010
0521179	BE-AR	1994
0521179	BE-AR	48X70X9!
0521195	BE-AR	222510
0521195	BE-AR	25X35X7!
0521203	BE-AR	224100
0521203	BE-AR	40X65X10!
0521211	BE-AR	224052
0521211	BE-AR	40X52X7!
0521260	BE-AR	222820

! Industrial Size/Type * Minor Width Difference

NUMERICAL INTERCHANGE

Mfr. No.	Name	Zero Duplication or Recommended Industrial
0521260	BE-AR	28X40X7!
0521286	BE-AR	222540
0521286	BE-AR	25X40X7!
0521377	BE-AR	1174
0521377	BE-AR	38X52X8.5!
0521419	BE-AR	224052
0521419	BE-AR	40X52X7!
0521443	BE-AR	224865
0521443	BE-AR	48X65X10!
0521476	BE-AR	1174
0521476	BE-AR	38X52X8.5!
0521500	BE-AR	224235
0521500	BE-AR	42X58X7!
0521518	BE-AR	224235
0521518	BE-AR	42X58X7!
0521534	BE-AR	224045
0521534	BE-AR	40X62X12!
0521559	BE-AR	224270
0521559	BE-AR	42X72X10!
0521567	BE-AR	224045
0521567	BE-AR	40X62X12!
0521575	BE-AR	223542
0521575	BE-AR	35X55X11!
0521583	BE-AR	1181
0521583	BE-AR	41X56X7!
0521609	BE-AR	224520
0521609	BE-AR	45X60X10!
0521617	BE-AR	1012
0521617	BE-AR	1012N
0521617	BE-AR	45X62X8!
0521633	BE-AR	1012
0521633	BE-AR	1012N
0521633	BE-AR	45X62X8!
0521674	BE-AR	1187
0521674	BE-AR	47X68X10!
052173	GEHL	**471516**!
052176	ALLCH	**415035**
0521906	BE-AR	35X50X8!
0521906	BE-AR	3771
0521948	BE-AR	BS25031
0521989	BE-AR	223830
0521989	BE-AR	38X55X7!
0522045	BE-AR	224220
0522045	BE-AR	42X56X7!
0522045	BE-AR	494117
0522136	BE-AR	224210
0522136	BE-AR	41X55X7!
0522144	BE-AR	224560
0522144	BE-AR	45X68X7!
0522151	BE-AR	224820
0522151	BE-AR	48X62X8!
0522169	BE-AR	1955
0522169	BE-AR	52X65X9!
0522185	BE-AR	227550
0522185	BE-AR	75X100X12!
0522219	BE-AR	225420
0522219	BE-AR	54X72X10!
0522227	BE-AR	225230
0522227	BE-AR	52X72X8!
0522276	BE-AR	1953
0522276	BE-AR	42X60X7!
0522292	BE-AR	1953
0522292	BE-AR	42X60X7!
0522318	BE-AR	BS16144
0522322	BE-AR	TCS45860
0522375	BE-AR	1948
0522375	BE-AR	50X68X8!
0522417	BE-AR	1012
0522417	BE-AR	1012N
0522425	BE-AR	225005
0522425	BE-AR	50X62X7!
0522458	BE-AR	1994

Mfr. No.	Name	Zero Duplication or Recommended Industrial
0522458	BE-AR	48X70X9!
0522490	BE-AR	225020
0522490	BE-AR	50X68X8!
0522532	BE-AR	48X62X8!
0522532	BE-AR	710320
0522540	BE-AR	224820
0522540	BE-AR	48X62X8!
0522581	BE-AR	224020
0522581	BE-AR	40X55X8!
0522599	BE-AR	226480
0522599	BE-AR	64X80X8!
0522607	BE-AR	227020
0522607	BE-AR	70X88X8!
0522615	BE-AR	48X70X9!
0522615	BE-AR	710313
0522623	BE-AR	228020
0522623	BE-AR	80X105X13!
0522656	BE-AR	BS16144
0522672	BE-AR	55X82X12!
0522698	BE-AR	38X58X8!
0522698	BE-AR	710318
0522730	BE-AR	1012
0522730	BE-AR	1012N
0522755	BE-AR	1990
0522755	BE-AR	TCS45718
0522805	BE-AR	223553
0522805	BE-AR	35X62X7!
0522839	BE-AR	1012
0522839	BE-AR	1012N
0522839	BE-AR	45X62X8!
0522847	BE-AR	226020
0522847	BE-AR	60X80X8!
0522912	BE-AR	225010
0522912	BE-AR	50X65X8!
0522920	BE-AR	225010
0522920	BE-AR	50X65X8!
0522938	BE-AR	38X52X8.5!
0522938	BE-AR	710309
0522953	BE-AR	224235
0522953	BE-AR	42X58X7!
0522995	BE-AR	223830
0522995	BE-AR	38X55X7!
0523019	BE-AR	1012
0523019	BE-AR	1012N
0523019	BE-AR	45X62X8!
0523027	BE-AR	225505
0523027	BE-AR	55X70X8!
0523050	BE-AR	224220
0523050	BE-AR	42X56X7!
0523050	BE-AR	494117
0523135	BE-AR	223542
0523135	BE-AR	35X55X11!
0523137	BE-AR	1945
0523137	BE-AR	228480
0523138	BE-AR	716102
0523138	BE-AR	85X105X10!
0523142	BE-AR	227040
0523142	BE-AR	70X90X10!
0523143	BE-AR	224252
0523143	BE-AR	42X62X8!
0523145	BE-AR	227040
0523145	BE-AR	70X90X10!
0523148	BE-AR	224045
0523148	BE-AR	40X62X12!
0523150	BE-AR	239146
0523150	BE-AR	38X54X7!
0523154	BE-AR	1174
0523154	BE-AR	38X52X8.5!
0523156	BE-AR	1012
0523156	BE-AR	1012N
0523157	BE-AR	1208
0523157	BE-AR	48X72X7!

Mfr. No.	Name	Zero Duplication or Recommended Industrial
0523172	BE-AR	223555
0523172	BE-AR	35X64X8!
0523178	BE-AR	1987
0523178	BE-AR	TCS45424
0523179	BE-AR	223235
0523179	BE-AR	32X46X6!
0523181	BE-AR	224820
0523181	BE-AR	48X62X8!
0523182	BE-AR	225110
0523182	BE-AR	51X65X7!
0523185	BE-AR	223605
0523185	BE-AR	36X50X7!
0523187	BE-AR	222820
0523187	BE-AR	28X40X7!
0523195	BE-AR	223510
0523195	BE-AR	35X47X7!
0523198	BE-AR	**1213N**
0523203	BE-AR	224220
0523203	BE-AR	42X56X7!
0523203	BE-AR	494117
0523203	BE-AR	TCS45473
0523209	BE-AR	224570
0523209	BE-AR	45X72X12!
0523211	BE-AR	224255
0523211	BE-AR	42X65X10!
0523213	BE-AR	224252
0523213	BE-AR	42X62X8!
0523219	BE-AR	1955
0523219	BE-AR	52X65X9!
0523220	BE-AR	225460
0523220	BE-AR	54X85X10!
0523226	BE-AR	224470
0523226	BE-AR	44X72X10!
0523238	BE-AR	225875
0523238	BE-AR	58X75X11!
0523240	BE-AR	225110
0523240	BE-AR	51X65X7!
0523248	BE-AR	1994
0523248	BE-AR	48X70X9!
0523255	BE-AR	223840
0523255	BE-AR	38X58X8!
0523263	BE-AR	224045
0523263	BE-AR	40X62X12!
0523291	BE-AR	222820
0523291	BE-AR	28X40X7!
0523292	BE-AR	223801!
0523294	BE-AR	1992
0523294	BE-AR	45X65X8!
0523322	BE-AR	223420
0523322	BE-AR	TCS45860
0523327	BE-AR	224210
0523327	BE-AR	42X55X8!
0523390	BE-AR	710334
0523439	BE-AR	1207
0523439	BE-AR	1207N
0523445	BE-AR	1205
0523445	BE-AR	1205N
0523446	BE-AR	1012
0523446	BE-AR	1012N
0523585	BE-AR	1205
0523585	BE-AR	1205N
0523611	BE-AR	228005
0523611	BE-AR	710235
0523641	BE-AR	223830
0523645	BE-AR	225005
0523651	BE-AR	1940
0523651	BE-AR	TCS45968
0523670	BE-AR	710235
0523670	BE-AR	BS40638
0523723	BE-AR	BS40387
052392	ALLCH	**417316**!
0525-14634LPD	JN-MN	**415645**!

Mfr. No.	Name	Zero Duplication or Recommended Industrial
0525-7042LUP	JN-MN	**417262**!
0525-7112LUP	JN-MN	**415645**!
0525-9964LPD	JN-MN	**417549**!
052640	ALLCH	**471766**!
052662	ALLCH	240735
052794	GMC	**470682**
052835	GMC	50075=
0529000	BE-AR	16214
0529001	BE-AR	16266
053219	GMC	**473226**
053243	ALLCH	240736
053279	GMC	**471735**
053496	ALLCH	**417343**!
053506	ALLCH	55199=
053517	ALLCH	**417205**!
053670	ALLCH	**417316**!
0537-10598LUP	JN-MN	**417551**
0537-12089LPD	JN-MN	**415938**
0537-16549LUP	JN-MN	**455576**!
0537-7193LPD	JN-MN	**417554**!
053926	ALLCH	240731
053927	ALLCH	240733
054-115-147B	AUDI	1108
054074	ALLCH	**416271**!
054270	ALLCH	**412119**!
054295	ALLCH	**411394**!
0543-6764LA	JN-MN	55357
05439	JAC	**481073**
05485	NATEN	**417539**!
0550-10302LPD	JN-MN	**417361**
0550-14438LPD	JN-MN	416191
0550-1684LPD	JN-MN	**416107**!
0550-1684LPD	JN-MN	455073
0550-2662LPD	JN-MN	**416107**!
0550-4825LUP	JN-MN	**476842***
0550-5926LUP	JN-MN	**417254***
0550-7186LUP	JN-MN	**416107**!
0550-7186LUP	JN-MN	455073
055000919	EATON	**471466**!
05506270LA	JN-MN	**417254**
055078SSR	SPG	55078S
0551-15201SS	JN-MN	231404*
055231	ALLCH	**472070**
055281	GEHL	**473440**
055282	GEHL	**472179**
055283	GEHL	**413248**
055391	ALLCH	**470625**!
055392	ALLCH	**471567**!
055941	GMC	**415960**
056-103-051A	AUDI	228480
056-103-051A	VW	228480
056-103-051D	AUDI	716102
056-103-051D	PORSC	716102
056-103-085	PORSC	3476
056-103-085	VW	3476
056-103-085B	PORSC	3476
056-103-085B	VW	3476
05602404	TROS	350156
05602404	TROS	**473096**
05602405	TROS	350156
05602405	TROS	**473096**
05602804	TROS	**472810**!
05603104	TROS	340771
05603204	TROS	342613!
05603205	TROS	342613!
05604002	TROS	340849
056092SB	TRSCM	**472705**!
056103051D	VW	716102
056112TB	TRSCM	**471281**!
056122TB	TRSCM	**471535**!
056132TB	TRSCM	**471551**!
0562-10152LUP	JN-MN	**417556**

! Industrial Size/Type * Minor Width Difference

= The U.S. customer service number is 877-4-TIMKEN. The Canadian customer service numbers are 800-565-4927 (English) and 800-565-0438 (French-Canadian).

Mfr. No.	Name	Zero Duplication or Recommended Industrial
0562-16720LDS	JN-MN	417555!*
0562-60015LDS	JN-MN	417556
0562-6533LPD	JN-MN	417555!
05620006	JA-HE	472924!
05620007	JA-HE	473213!
05620008	JA-HE	471271!
05620009	JA-HE	471646!
05620010	JA-HE	350942
0572106	EATON	411253!
05727AB	CASE	471763
057288	ALLCH	472636!
0575-10303LUP	JN-MN	416666
0575-12423LUP	JN-MN	416039
0575-14915LPD	JN-MN	416666
0575-15839LUP	JN-MN	415447
0575-18542LUP	JN-MN	417362!*
0575-8822LPD	JN-MN	417362!
0575-9165LUP	JN-MN	416666
0575-9548LUP	JN-MN	417362!
057541100	EATON	415725!
057548	ALLCH	415045!
05757	NAK	13X28X7!
058519	REX	295200=
058519	REX	416888!
058531	NATEN	471766!
058531	REX	471766!
05861AB	CASE	474264
0587-13816LPD	JN-MN	455297
0587-9654LUP	JN-MN	416476!
058876	ALLCH	415379
059-103-051D	AUDI	710205
059-103-051D	PORSC	710205
059-103-051D	PORSC	BS16144
059-103-085E	AUDI	716484
059103095	AUDI	25598
059103095	VW	25598
059105257A	AUDI	J1105
059121119	AUDI	25598
059121119	VW	25598
059246	ALLCH	471649!
0593-10258LPD	JN-MN	417780
0593-9351LPD	JN-MN	417780
0593-9401LPD	JN-MN	417780
059325	ALLCH	417316!
059463900	EATON	55353
05950	SIDEW	205004
059931VC	TRSCM	340797
059947	ALLCH	470898
0600-12196LUP	JN-MN	417365
0600-16079LDS	JN-MN	415683*
0600-2499LUP	JN-MN	415683
0600-5610LUP	JN-MN	415072
0600-6719LA	JN-MN	415072
0600-8947LUP	JN-MN	415072
0600-9514LUP	JN-MN	415683
0600-9993LUP	JN-MN	415072
06003803	TROS	340797
06004003	TROS	7399S!
06010AB	CASE	450621
06017AB	CASE	473466
06030027	ALLCH	476838!
06030076	ALLCH	471795
06034623	ALLCH	473016!
06049738	ALLCH	416888!
060504AB	CASE	410308!
06075AB	CASE	471646!
060775	ALLCH	471267!
060809VC	TRSCM	340387
06081SM	TRSCM	253747!
06081SM	TRSCM	340849
06081VM	TRSCM	340387
0608722	GMC	471224!
0609108	THIOK	415960
06091VB	TRSCM	343105
060920	ALLCH	416664!
06092TB	TRSCM	351487
06092TB	TRSCM	7188S
06092VB	TRSCM	7188S
060931VB	TRSCM	7399S!
06101PVB	TRSCM	314267N
06111SB	TRSCM	474261
06112SB	TRSCM	471466
06112TB	TRSCM	471466
06112TB	TRSCM	471466!
06112VTB	TRSCM	471466!
06113TA	TRSCM	471466
06117618	ALLCH	415035
0612-10311LUP	JN-MN	455330!
0612-10381LPD	JN-MN	455330!
06122TB	TRSCM	471264!
0612B	GOODM	471567!
06132TB	TRSCM	471255!
06132TB	TRSCM	471255
06132VTB	TRSCM	471255
06134SSTB	TRSCM	471255
061352	ALLCH	473179!
06136	NAK	300X340X20
061374SSTZN	TRSCM	450557
06152SZ	TRSCM	471612
061607A	HARWA	6X16X7
061696	ALLCH	415995!
0618-4864LUP	JN-MN	455583N!
06186621	ALLCH	470954!
06198881	ALLCH	472179
06198907	ALLCH	416891!
06199004	ALLCH	471138!
06207849	ALLCH	473010!
062207A	HARWA	6X22X7!
0625-7194LPD	JN-MN	455480!
0625-8804LPD	JN-MN	455480!
0625-8949LUP	JN-MN	417562
062559400	EATON	412473!
06283576	ALLCH	415991
06283576	ALLCH	415991!
06284855	ALLCH	415302
06288948	ALLCH	415379
06289417	ALLCH	415449!
06290407	ALLCH	417316!
06297337	ALLCH	411178=
06326086	ALLCH	471413
06340061	ALLCH	450930=
06345193	ALLCH	417269!
06347033	ALLCH	417344!
06357784	ALLCH	415995!
0637-17886LUP	JN-MN	417563
0637-9749LPD	JN-MN	55692*=
06383863	ALLCH	471651
064302	ALLCH	473464!
064302	ALLCH	473464
064305	ALLCH	470682
06435606	ALLCH	471267!
064474	GEHL	471504!
064551	EATON	410737!
06486203	ALLCH	416345!
06486203	ALLCH	455033
06492664	ALLCH	415995!
0650-10267LUP	JN-MN	415294!
0650-10715LUP	JN-MN	415294!
0650-12772LUP	JN-MN	415294!
0650-16762LDS	JN-MN	416229
0650-8950LUP	JN-MN	416229
06504AB	CASE	410308!
06506778	ALLCH	471529
065089404	WHITE	471554!
065089406	WHITE	471808!
065097801	WHITE	J1134
065101101	WHITE	415053H=
065101102	WHITE	417269!
065112SB	TRSCM	481528
065117401	WHITE	415185H=
065122SB	TRSCM	481537
06512990	ALLCH	415483
065133SB	TRSCM	481073
065136001	WHITE	417621
065139901	WHITE	416345=
065152TB	TRSCM	481397
06522402	WHITE	J1135=
065611500	EATON	471466!
06581144	ALLCH	415449
06589428	ALLCH	476470!
0661010	LILIS	471692!
066111SB	TRSCM	481481
066122VB	TRSCM	471538
0662-8431LPD	JN-MN	417298
066309	ALLCH	476470
06680334	ALLCH	340771
066860	ALLCH	415035
06707	NAK	125X170X15
0672-E498	GM	OK311
0672-F013	GM	OK411
06739833	ALLCH	415349=
0675-10062LUP	JN-MN	417596
0675-12078LPD	JN-MN	417596
0675-14821LDS	JN-MN	415327
0675-16763LDS	JN-MN	417596
0675-18711LPD	JN-MN	417596
0675-7208LUP	JN-MN	415327
0675-9048LUP	JN-MN	415327
0675-9290LPD	JN-MN	415327
067541	ALLCH	471466!
0675AB	CASE	471646!
067676	AUTOZ	13069
067677	AUTOZ	13338
067824	AUTOZ	BS15868
067828	AUTOZ	BS25035
067842	AUTOZ	BS40110
067849	AUTOZ	BS40380
067854	AUTOZ	BS40396
067863	AUTOZ	BS40449-1
067870	AUTOZ	BS40509
067877	AUTOZ	BS40578
067878	AUTOZ	BS40592
067880	AUTOZ	BS40620
067913	ALLCH	471820
067914	ALLCH	473214!
068-103-085A	AUDI	3476
068-103-085A	VW	3476
068-103-085R	VW	3476
068-105-085E	AUDI	3476
068-105-085E	VW	3476
068-198-171	AUDI	716102
068-198-171	VW	716102
068-198-171A	AUDI	716102
068-198-171A	VW	716102
068103051G	VW	716102
068103051L	VW	716102
068112SB	TRSCM	471529
068112TC	TRSCM	471529
068118	AUTOZ	TCS45108
068122SB	TRSCM	471538!
068122TZ	TRSCM	471538!
068128	AUTOZ	TCS45285
068132SB	TRSCM	471553!
068133TC	TRSCM	471553!
068135	AUTOZ	TCS45472
068137	AUTOZ	TCS45473
068139	AUTOZ	TCS45483
068814SB	TRSCM	471579
068160	AUTOZ	TCS45603
068168	AUTOZ	TCS45635
068181	AUTOZ	TCS45724
068200	AUTOZ	TCS45847
068326	AUTOZ	35094
068376	AUTOZ	35394
068513	ALLCH	472144!
0687-14128LDS	JN-MN	455584
0687-19138LUP	JN-MN	455584*
069-115-147	AUDI	1108
06946AB	CASE	473424!
06949AB	CASE	473424!
069641	ALLCH	330385!
069749	GMC	473211!
069897	GMC	471192
06M5026901	WHITE	J1127
06M5050101	WHITE	J1121
06M5572501	WHITE	473237!
06X5422301	WHITE	J1126
06X5422601	WHITE	415196!
0700-10063LPD	JN-MN	416364!
0700-11577LPD	JN-MN	416239!
0700-13240LDS	JN-MN	416364!*
0700-17062LUP	JN-MN	417597
0700-17746LDS	JN-MN	416239!*
0700-6840LUP	JN-MN	417597
0700-6862LPD	JN-MN	416364!
0700-9304LUP	JN-MN	416239!
0704-0015	GM	470334!
0704-0015	GM	50289
0704-0134	GM	50081
0704-0257	GM	50419
0704-0279	GM	472560N!
0704-0283	GM	471652
0704-0291	GM	471763
0704-0298	GM	473426
0704-0359	GM	473234!
0704-0405	GM	473471
0704-0424	GM	415483
0704-0431	GM	415984!
0704-0442	GM	415088
0704-0442	GM	415088!
0704-0444	GM	417171!
0704-0538	GM	472354!
0704-0546	GM	472397!
0704-0571	GM	343098
0704-0573	GM	470954!
0704-0628	GM	470950!
0704-0628	GM	6241S
0704-0640	GM	473234
0704-0699	GM	472492!
0704-0730	GM	450068
0704-0748	GM	417621!
0704-0749	GM	416288!
0704-0893	GM	471868
0704-0897	GM	415483
0704-0918	GM	481650
0704-0993	GM	416654!
0704-1065	GM	450341
0704-1069	GM	55357
0704-1071	GM	455434
0704-1074	GM	412920!
0704-1096	GM	343123
0704-1107	GM	471549!
0704-1110	GM	471532
0704-1119	GM	50206
0704-1130	GM	471684!
0704-1132	GM	471231!
0704-1144	GM	471649!
0704-1145	GM	471689!

! Industrial Size/Type * Minor Width Difference

= The U.S. customer service number is 877-4-TIMKEN. The Canadian customer service numbers are 800-565-4927 (English) and 800-565-0438 (French-Canadian).

Mfr. No.	Name	Zero Duplication or Recommended Industrial
0704-1155	GM	**470712**!
0704-1172	GM	**472258**!
0704-1187	GM	240319
0704-1191	GM	**453065**
0704-1209	GM	**473444**
0704-1215	GM	**471504**!
0704-1220	GM	**470088**
0704-1264	GM	**416273**!
0704-1284	GM	**415995**!
0704-1303	GM	**415023**
0704-1379	GM	**415645**!
0704-1472	GM	**470954**!
0704-1696	GM	43073S
0704-1697	GM	**471766**!
0704-1698	GM	50478
0704-1701	GM	**415458**!
0704-1702	GM	**416666**
0704-1703	GM	**417357**
0704-1706	GM	**412920**!
0704-1707	GM	**471141**!
0704-1713	GM	**471076**
0704-1714	GM	**471272**!
0704-1715	GM	**471316**
0704-1722	GM	**416273**
0704-1723	GM	**480630**!
0704-1737	GM	**474277**
0704-1749	GM	**472144**!
0704-1756	GM	43077S
0704-1773	GM	340387
0704-1782	GM	**471538**!
0704-1783	GM	**471553**!
0704-1789	GM	**474253**
0704-1790	GM	**254287**!
0704-1801	GM	**450040**
0704-1807	GM	**471760**
0704-1809	GM	**471516**!
0704-1815	GM	**350974**!
0704-1818	GM	43076S
0704-1821	GM	**471413**!
0704-1831	GM	**473215**!
0704-1832	GM	**473197**!
0704-1833	GM	6241S
0704-1835	GM	**471835**!
0704-1837	GM	**473197**
0704-1842	GM	**481163**!
0704-1843	GM	**470625**!
0704-1844	GM	7886S
0704-1845	GM	**473228**
0704-1852	GM	453510
0704-1853	GM	43074S
0704-1858	GM	**473367**!
0704-1858	GM	**473367**
0704-1867	GM	**472185**!
0704-1868	GM	**472185**!
0704-1876	GM	**353120**
0704-1890	GM	453066
0704-1890	GM	**470898**!
0704-1899	GM	**410694**!
0704-1925	GM	455015
0704-1931	GM	**476470**
0704-1935	GM	**415991**
0704-1935	GM	**415991**!
0704-1986	GM	**472164**!
0704-1987	GM	**352541**
0704-2012	GM	**472258**!
0704-2037	GM	**470354**
0704-2085	GM	**472409**!
0704-2094	GM	**412871**!
0704-2095	GM	**412119**!
0704-2096	GM	**416267**!
0704-2097	GM	**455005**
0704-2098	GM	**417181**!
0704-2099	GM	**415437**
0704-2100	GM	**472157**!
0704-2100	GM	**472157**
0704-2103	GM	**415294**!
0704-2104	GM	**415867**
0704-2109	GM	**471281**!
0704-2111	GM	**471272**!
0704-2112	GM	**471267**!
0704-2117	GM	**470898**
0704-2118	GM	**472015**!
0704-2120	GM	6703S
0704-2190	GM	**473439**!
0704-2204	GM	**472653**!
0704-2256	GM	**416292**
0704-2270	GM	470328
0704-2270	GM	**481213**!
0704-2287	GM	**473441**
0704-2289	GM	**473313**
0704-2315	GM	**471553**!
0704-2343	GM	340850
0704-2344	GM	**3395**!
0704-2344	GM	352444
0704-2351	GM	**481644**
0704-2352	GM	**471272**!
0704-2411	GM	**330699**
0704-2413	GM	453063
0704-2415	GM	**472179**
0704-2423	GM	**473212**!
0704-2424	GM	450463
0704-2425	GM	450335
0704-2427	GM	**450090**
0704-2428	GM	**481073**
0704-2476	GM	**450065**
0704-2477	GM	50254=
0704-2482	GM	**450776**!
0704-2489	GM	**455117**
0704-2493	GM	**470590**
0704-2494	GM	43069S
0704-2495	GM	343104
0704-2496	GM	353135
0704-2496	GM	**474278**
0704-2497	GM	**476838**!
0704-2498	GM	**471820**
0704-2860	GM	**472311**!
0704-2865	GM	**471649**!
0704-2868	GM	**471705**!
0704-2871	GM	**472354**!
0704-2889	GM	**472636**!
0704-2893	GM	**415458**!
0704-2901	GM	**415995**!
0704-2901	GM	**415995**!
0704-2920	GM	**415124**
0704-2923	GM	341022
0704-2925	GM	**471554**!
0704-2933	GM	**471866**!
0704-2953	GM	416041
0704-2954	GM	**455566**
0704-2964	GM	**410496**!
0704-2965	GM	**471103**!
0704-2967	GM	240733
0704-2979	GM	322353
0704-2979	GM	**474278**
0704-3017	GM	340827
0704-3032	GM	**451182**
0704-3034	GM	416775
0704-3217	GM	5976S
0704-3218	GM	6703S
0704-3228	GM	240356
0704-3231	GM	**410524**
0704-3232	GM	**415047**
0704-3234	GM	**416130**!
0704-3235	GM	441319
0704-3237	GM	**450342**
0704-3241	GM	**471571**
0704-3242	GM	**473380**
0704-3244	GM	**472536**
0704-3272	GM	50191
0704-3273	GM	**415449**!
0704-3277	GM	**415683**
0704-3280	GM	353131
0704-3280	GM	**471231**!
0704-3304	GM	**473240**!
0704-3315	GM	**415960**!
0704-3323	GM	**471354**!
0704-3327	GM	**473010**!
0704-3332	GM	**473232**
0704-3344	GM	**413246**
0704-3348	GM	**416706**!
0704-3351	GM	**417356**!
0704-3351	GM	455188
0704-3352	GM	**416888**!
0704-3353	GM	**417247**!
0704-3356	GM	**416107**!
0704-3356	GM	455073
0704-3385	GM	350909
0704-3385	GM	**471224**!
0704-3389	GM	340817
0704-3418	GM	**471633**!
0704-3470	GM	342613!
0704-3471	GM	**471652**
0704-3487	GM	5865
0704-3498	GM	**473244**
0704-3499	GM	4739
0704-3501	GM	**450362**
0704-3505	GM	455321
0704-3509	GM	50514
0704-3514	GM	40370S
0704-3531	GM	**416664**!
0704-3542	GM	45031S
0704-3564	GM	**415697**!
0704-3568	GM	**473241**
0704-3572	GM	450260
0704-3607	GM	**416370**!
0704-3613	GM	5877
0704-3630	GM	442380
0704-3632	GM	240151
0704-3633	GM	340787
0704-3634	GM	331301N
0704-3636	GM	**471821**!
0704-3637	GM	**473466**
0704-3638	GM	**473461**!
0704-3640	GM	**415001**!
0704-3641	GM	**416154**!
0704-3646	GM	**472924**!
0704-3649	GM	50010
0704-3653	GM	**472826**!
0704-3656	GM	**327303**!
0704-3658	GM	**471466**!
0704-3668	GM	**455079**!
0704-3681	GM	50501
0704-3716	GM	**473228**
0704-3717	GM	**470712**!
0704-3719	GM	**473237**!
0704-3747	GM	**471276**
0704-3763	GM	**473226**
0704-3764	GM	50413
0704-3766	GM	**473467**
0704-3768	GM	450415
0704-3769	GM	**472319**
0704-3770	GM	472951
0704-3770	GM	**474252**
0704-3774	GM	471915
0704-3776	GM	**471692**!
0704-3779	GM	**476838**!
0704-3854	GM	**472397**!
0704-3869	GM	5166
0704-3950	GM	**472015**!
0704-3956	GM	**472826**!
0704-3960	GM	**471281**!
0704-3972	GM	**417262**!
0704-3990	GM	J1101
0704-3991	GM	J1122
0704-4020	GM	J1103
0704-4022	GM	J1105
0704-4023	GM	J1106
0704-4024	GM	J1107
0704-4026	GM	J1109
0704-4028	GM	J1111
0704-4029	GM	J1112
0704-4032	GM	J1115
0704-4034	GM	J1117
0704-4035	GM	J1118
0704-4036	GM	J1119
0704-4038	GM	J1121
0704-4039	GM	J1123
0704-4040	GM	J1124
0704-4041	GM	J1125
0704-4042	GM	J1126
0704-4043	GM	J1127
0704-4044	GM	J1128
0704-4046	GM	J1130
0704-4047	GM	J1131
0704-4048	GM	J1132
0704-4050	GM	J1134
0704-4052	GM	J1136
0704-4054	GM	J1138
0704-4056	GM	J1140
0704-4057	GM	J1141
0704-4070	GM	**455123**
0704-4091	GM	**417621**!
0704-4132	GM	51032S
0704-4135	GM	**415379**
0704-4160	GM	**473214**
0704-4171	GM	**417254**
0704-4212	GM	40433S
0704-4231	GM	**417351**!
0704-4317	GM	**480889**
0704-4324	GM	**413478**
0704-4351	GM	**417491**
0704-4488	GM	**473204**
0704-4490	GM	**417505**
0704-4511	GM	**472560N**
0704-4544	GM	**471887**
0704-4549	GM	**471224**!
0704-4553	GM	**416077**
0704-4554	GM	455308
0704-4568	GM	**417488**!
0704-4589	GM	417515
0704-4910	GM	**450639**
0704-4916	GM	**471192**
0704-5279	GM	**471692**!
0704-5280	GM	**473446**
0704-5283	GM	**415498**
0704-5295	GM	**416149**
0704-5480	GM	**471516**!
0704-5481	GM	**415227**!
0704-5503	GM	**473235**
0704-5504	GM	**416345**!
0704-5504	GM	455033
0704-5505	GM	**417514**
0704-5586	GM	**415196**!
0704-5596	GM	**472164**!
0704-5597	GM	**415988**
0704-5598	GM	**417316**!
0704-5599	GM	**416339**
0704-5600	GM	**415035**

! Industrial Size/Type

= The U.S. customer service number is 877-4-TIMKEN. The Canadian customer service numbers are 800-565-4927 (English) and 800-565-0438 (French-Canadian).

Mfr. No.	Name	Zero Duplication or Recommended Industrial
0704-5601	GM	**415449**!
0704-5602	GM	**470334**!
0704-5603	GM	**471785**!
0704-5846	GM	**416229**
0704-5859	GM	**471442**!
0704-5961	GM	**417487**
0704-5961	GM	**417487**!
0704-6061	GM	**474252**!
0704-6068	GM	**471692**!
0704-6070	GM	**471692**!
0704-6077	GM	**474260**
0704-6080	GM	**473427**
0704-6082	GM	**473203**
0704-6094	GM	**473211**!
0704-6102	GM	**471835**!
0704-6103	GM	323125
0704-6103	GM	**450456**!
0704-6109	GM	203013
0704-6113	GM	**473440**!
0704-6116	GM	**472213**
0704-6119	GM	**470682**
0704-6120	GM	50200
0704-6123	GM	340927
0704-6127	GM	43095S!
0704-6130	GM	**473233**!
0704-6131	GM	**473445**
0704-6133	GM	240119
0704-6134	GM	**471526**!
0704-6135	GM	**450400**
0704-6143	GM	**473449**!
0704-6144	GM	473451!
0704-6149	GM	**473454**
0704-6150	GM	**473454**!
0704-6157	GM	**472492**!
0704-6160	GM	**473467**
0704-6163	GM	440972
0704-6164	GM	**455080**
0704-6167	GM	**471138**!
0704-6171	GM	**411394**!
0704-6183	GM	**253747**!
0704-6184	GM	**417079**
0704-6188	GM	476281
0704-6262	GM	**416332**!
0704-6263	GM	40555
0704-6263	GM	40555S!
0704-6264	GM	**471526**!
0704-6268	GM	455022
0704-6272	GM	455871N
0704-6346	GM	**474254**
0704-6351	GM	**472164**!
0704-6380	GM	**417570**
0704-6382	GM	**415116**
0704-6383	GM	**411253**!
0704-6385	GM	**417316**!
0704-6386	GM	**416339**
0704-6386	GM	455031!
0704-6387	GM	**415035**
0704-6387	GM	**415035**!
0704-6388	GM	**415449**!
0704-6389	GM	**470334**!
0704-6437	GM	**415962**
0704-6440	GM	**471567**!
0704-6459	GM	**450188**
0704-6505	GM	**416654**!
0704-6516	GM	**416294**!
0704-6523	GM	456744N
0704-6527	GM	**415034**!
0704-6530	GM	**455134**!
0704-6550	GM	**417365**
0704-6554	GM	473407
0704-6557	GM	**471539**!
0704-6560	GM	50224
0704-6562	GM	471729
0704-6565	GM	473414
0704-6571	GM	455871
0704-6589	GM	**471787**!
0704-6590	GM	**415077**
0704-6615	GM	**415085**!
0704-6615	GM	456648
0704-6616	GM	**412027**
0704-6617	GM	8059S
0704-6621	GM	**471567**!
0704-6732	GM	5836
0704-6733	GM	8705S
0704-6734	GM	**471766**
0704-6735	GM	**472810**!
0704-6736	GM	203029
0704-6737	GM	324941
0704-6739	GM	**415302**
0704-6740	GM	**416332**!
0704-6741	GM	**416345**!
0704-6742	GM	**417196**!
0704-6743	GM	**417269**!
0704-6744	GM	**417349**!
0704-6745	GM	**417351**!
0704-6746	GM	417490
0704-6747	GM	**417493**
0704-6748	GM	417526
0704-6750	GM	**451082**
0704-6751	GM	**455019**!
0704-6752	GM	455197N
0704-6753	GM	**455480**!
0704-6754	GM	**470380**!
0704-6755	GM	**470590**
0704-6756	GM	**474253**
0704-6757	GM	**471137**
0704-6758	GM	**471264**!
0704-6759	GM	**471267**!
0704-6760	GM	**471413**!
0704-6761	GM	**471466**!
0704-6762	GM	**471472**!
0704-6763	GM	**471504**
0704-6764	GM	**471529**
0704-6765	GM	**471553**!
0704-6766	GM	**471564**
0704-6767	GM	**471570**!
0704-6768	GM	**471647**
0704-6769	GM	**471730**
0704-6770	GM	**471744**!
0704-6771	GM	**471763**
0704-6772	GM	**473459**
0704-6773	GM	**472439**
0704-6774	GM	**472475**
0704-6775	GM	**472492**!
0704-6776	GM	**473231**!
0704-6777	GM	**473236**!
0704-6778	GM	**473445**
0704-6779	GM	**476838**!
0704-6780	GM	**417159**
0704-6781	GM	**417298**
0704-6782	GM	**417344**!
0704-6783	GM	**417350**!
0704-6784	GM	**417355**!
0704-6785	GM	**417356**!
0704-6786	GM	**417357**
0704-6787	GM	**417484**!
0704-6788	GM	**417491**
0704-6789	GM	**417507**
0704-6790	GM	**417511**
0704-6791	GM	**417541**
0704-6792	GM	**417546**!
0704-6793	GM	**417555**!
0704-6794	GM	**417562**
0704-6795	GM	**417600**
0704-6796	GM	**417602**!
0704-6797	GM	**417604**
0704-6798	GM	**417608**
0704-6799	GM	**471764**!
0704-6800	GM	**414268**!
0704-6801	GM	**450593**!
0704-6802	GM	**470806**
0704-6803	GM	**450911N**!
0704-6804	GM	**472164**
0704-6805	GM	**451857**
0704-6806	GM	**455134**!
0704-6807	GM	**417967**!
0704-6808	GM	**455194**
0704-6809	GM	**455356**
0704-6810	GM	**455584**
0704-6811	GM	**474281**!
0704-6812	GM	**471766**!
0704-6813	GM	**470625**!
0704-6814	GM	470950!
0704-6814	GM	6241S
0704-6815	GM	**471138**!
0704-6816	GM	**471224**!
0704-6817	GM	**471271**!
0704-6818	GM	**471391**!
0704-6819	GM	**473367**
0704-6820	GM	**471551**!
0704-6821	GM	**471554**!
0704-6822	GM	**471652**
0704-6823	GM	**471705**!
0704-6824	GM	**471760**
0704-6825	GM	**471765**!
0704-6826	GM	**471820**
0704-6827	GM	**472287**!
0704-6828	GM	**472319**
0704-6829	GM	**473197**
0704-6830	GM	**473010**!
0704-6831	GM	**473016**!
0704-6832	GM	**473205**!
0704-6833	GM	**473224**!
0704-6834	GM	**473227**!
0704-6835	GM	**473232**!
0704-6836	GM	**473233**!
0704-6837	GM	**473258**!
0704-6838	GM	**473313**!
0704-6839	GM	**473421**
0704-6840	GM	**473446**
0704-6841	GM	**473449**!
0704-6842	GM	**480210**!
0704-6843	GM	**472354**!
0704-6844	GM	**350435**
0704-6845	GM	**412861**
0704-6846	GM	**416239**!
0704-6847	GM	**417601**
0704-6848	GM	**471341**!
0704-6849	GM	**471649**!
0704-6850	GM	**471651**
0704-6851	GM	**472213**
0704-6852	GM	**472924**!
0704-6853	GM	**473214**!
0704-6854	GM	50883=
0704-6855	GM	**412027**
0704-6856	GM	**417481**
0704-6857	GM	450545
0704-6858	GM	**470898**
0704-6859	GM	3492V
0704-6861	GM	**471141**
0704-6862	GM	7751H
0704-6863	GM	**471750**
0704-6864	GM	**471554**
0704-6865	GM	40085S
0704-6866	GM	**471413**
0704-6868	GM	40494S
0704-6870	GM	**471224**
0704-6871	GM	**470954**
0704-6872	GM	**471526**
0704-6873	GM	43072S
0704-6875	GM	350156
0704-6875	GM	**473096**
0704-6877	GM	**471103**!
0704-6878	GM	**474279N**!
0704-6880	GM	203025
0704-6881	GM	240319
0704-6882	GM	240735
0704-6883	GM	**252277**
0704-6884	GM	345035
0704-6885	GM	**472016**
0704-6886	GM	**411376**!
0704-6887	GM	**412119**!
0704-6888	GM	**412920**!
0704-6889	GM	**412943**
0704-6890	GM	**413469**!
0704-6891	GM	413479
0704-6892	GM	**415001**!
0704-6893	GM	**415027**
0704-6894	GM	**415036**
0704-6895	GM	**415090**
0704-6897	GM	**415128**
0704-6898	GM	**415284**
0704-6899	GM	**415294**!
0704-6900	GM	**415349**
0704-6901	GM	**415351**!
0704-6902	GM	**415437**
0704-6903	GM	**415458**!
0704-6904	GM	**415551**
0704-6905	GM	**415725**!
0704-6906	GM	**415995**!
0704-6906	GM	**415995**!
0704-6907	GM	**412473**!
0704-6908	GM	**415937**!
0704-6909	GM	**415938**
0704-6910	GM	**415960**
0704-6911	GM	**416077**
0704-6912	GM	**416107**!
0704-6913	GM	**416137**
0704-6914	GM	**416154**!
0704-6915	GM	**416158**
0704-6916	GM	**416229**
0704-6917	GM	**416364**!
0704-6918	GM	416556!
0704-6918	GM	**472157**
0704-6919	GM	**416624**!
0704-6920	GM	**416666**
0704-6921	GM	**416865**!
0704-6966	GM	5115
0704-6968	GM	**410737**!
0704-7003	GM	**411253**!
0704-7095	GM	200851
0704-7123	GM	5146
0704-7124	GM	5167
0704-7125	GM	5168
0704-7126	GM	5169
0704-7127	GM	5170
0704-7128	GM	5246
0704-7130	GM	5399
0704-7131	GM	5518
0704-7132	GM	5520
0704-7133	GM	5521
0704-7134	GM	5527
0704-7135	GM	5531
0704-7136	GM	5532
0704-7137	GM	5537
0704-7138	GM	5538
0704-7139	GM	6357S
0704-7140	GM	6380

! Industrial Size/Type
= The U.S. customer service number is 877-4-TIMKEN. The Canadian customer service numbers are 800-565-4927 (English) and 800-565-0438 (French-Canadian).

Mfr. No.	Name	Zero Duplication or Recommended Industrial
0704-7143	GM	6760S
0704-7145	GM	7512SSO
0704-7146	GM	8362
0704-7147	GM	9555S
0704-7148	GM	9600S
0704-7149	GM	**471760**
0704-7150	GM	**471763**
0704-7153	GM	40568S
0704-7155	GM	**471264**
0704-7156	GM	**471442**
0704-7157	GM	**471466**
0704-7158	GM	42081S!
0704-7159	GM	**472311**
0704-7160	GM	42352S
0704-7161	GM	42421S
0704-7162	GM	312518
0704-7163	GM	43078S
0704-7165	GM	43086S
0704-7166	GM	43109S
0704-7167	GM	**417621**!
0704-7168	GM	45653S
0704-7170	GM	46997S
0704-7171	GM	47150S
0704-7174	GM	50026
0704-7175	GM	**414045**!
0704-7176	GM	50126
0704-7177	GM	50168
0704-7178	GM	50209
0704-7179	GM	50266
0704-7180	GM	50327
0704-7183	GM	**330385**!
0704-7184	GM	**352541**
0704-7185	GM	50402
0704-7186	GM	50405
0704-7188	GM	50445
0704-7189	GM	50462
0704-7190	GM	50468
0704-7191	GM	480491
0704-7193	GM	50528
0704-7194	GM	50560
0704-7196	GM	50631
0704-7197	GM	50798
0704-7199	GM	51039
0704-7202	GM	**411348**!
0704-7203	GM	55028
0704-7204	GM	55030
0704-7205	GM	55078S
0704-7207	GM	55103S
0704-7208	GM	**417563**
0704-7209	GM	55141
0704-7211	GM	55193=
0704-7212	GM	55236
0704-7213	GM	55238
0704-7220	GM	55337
0704-7222	GM	55353
0704-7227	GM	**416153**!
0704-7232	GM	200642
0704-7234	GM	**471766**
0704-7235	GM	200752
0704-7236	GM	200854
0704-7237	GM	200856
0704-7238	GM	200861
0704-7240	GM	200885
0704-7241	GM	203002
0704-7242	GM	204029
0704-7242	GM	204507!
0704-7243	GM	204017
0704-7244	GM	205004
0704-7245	GM	205011
0704-7246	GM	205035
0704-7248	GM	240215
0704-7249	GM	240457
0704-7250	GM	240716
0704-7251	GM	240949
0704-7252	GM	311197
0704-7254	GM	**471224**!
0704-7255	GM	**471264**!
0704-7256	GM	**471442**!
0704-7257	GM	**471649**!
0704-7259	GM	**472324**!
0704-7260	GM	**473224**!
0704-7261	GM	323119
0704-7262	GM	323126
0704-7262	GM	**474278**
0704-7264	GM	323133
0704-7265	GM	**323138**!
0704-7267	GM	327215
0704-7267	GM	**415035**
0704-7269	GM	**254270**
0704-7270	GM	340771
0704-7272	GM	340835
0704-7274	GM	340849
0704-7275	GM	340853
0704-7276	GM	340930
0704-7277	GM	342517
0704-7279	GM	342805
0704-7280	GM	**253099**
0704-7281	GM	343105
0704-7281	GM	7399S!
0704-7282	GM	343115
0704-7283	GM	343185
0704-7284	GM	343186
0704-7285	GM	345448
0704-7286	GM	347304
0704-7288	GM	**472311**!
0704-7289	GM	350877
0704-7289	GM	**471633**!
0704-7294	GM	**471567**!
0704-7295	GM	**471646**!
0704-7299	GM	**472560N**!
0704-7300	GM	353132
0704-7302	GM	353137
0704-7302	GM	**473424**
0704-7303	GM	353141!
0704-7304	GM	**471765**!
0704-7306	GM	**415991**
0704-7306	GM	455146!
0704-7307	GM	355669
0704-7308	GM	355732
0704-7309	GM	365008
0704-7310	GM	**410102**
0704-7311	GM	**410987**!
0704-7313	GM	**411245**!
0704-7314	GM	**471737**
0704-7315	GM	**411330**!
0704-7316	GM	**410190**
0704-7317	GM	**410694**!
0704-7318	GM	**410708**
0704-7319	GM	**410752**
0704-7320	GM	**410825**
0704-7321	GM	471337
0704-7322	GM	**411500**
0704-7323	GM	**412040**
0704-7324	GM	**412725**
0704-7325	GM	**413246**
0704-7326	GM	**413247**!
0704-7327	GM	**413248**
0704-7328	GM	**413470**!
0704-7329	GM	**413472**
0704-7330	GM	**415007**
0704-7331	GM	**415021**
0704-7332	GM	**415023**
0704-7333	GM	**415025**
0704-7334	GM	**415034**!
0704-7335	GM	**415041**
0704-7336	GM	**415043**
0704-7337	GM	**415045**!
0704-7338	GM	415052
0704-7339	GM	**415058**
0704-7340	GM	415060
0704-7341	GM	415064
0704-7342	GM	**415066**
0704-7343	GM	**415072**
0704-7344	GM	**415074**
0704-7345	GM	**415076**
0704-7346	GM	**415082**
0704-7347	GM	**415085**!
0704-7348	GM	**415088**
0704-7349	GM	**415138**!
0704-7350	GM	**415142**
0704-7351	GM	**415150**!
0704-7352	GM	**415187**
0704-7353	GM	**415219**
0704-7354	GM	**415234**!
0704-7355	GM	**415254**
0704-7356	GM	**415259**!
0704-7357	GM	**415263**
0704-7358	GM	**415295**
0704-7359	GM	**415303**!
0704-7360	GM	415317
0704-7361	GM	**415327**
0704-7362	GM	**415350**
0704-7363	GM	**415371**
0704-7364	GM	**415389**
0704-7365	GM	**415394**
0704-7367	GM	**415447**
0704-7368	GM	**415482**
0704-7369	GM	**415498**
0704-7370	GM	**415559**
0704-7371	GM	**417433**!
0704-7372	GM	**415577**
0704-7373	GM	**415683**
0704-7374	GM	**415711**
0704-7375	GM	415832
0704-7376	GM	**415854**
0704-7377	GM	415871
0704-7378	GM	**415876**
0704-7379	GM	415897
0704-7380	GM	**415958**
0704-7381	GM	415983N!
0704-7382	GM	416008
0704-7383	GM	**416024**
0704-7384	GM	416029N!
0704-7385	GM	**416039**
0704-7386	GM	416043
0704-7387	GM	**416044**
0704-7388	GM	**416070**
0704-7389	GM	**416071**
0704-7390	GM	416102
0704-7391	GM	**416125**!
0704-7392	GM	**416127**
0704-7393	GM	**416135**!
0704-7394	GM	416144
0704-7395	GM	416147
0704-7396	GM	**416149**
0704-7397	GM	**416153**!
0704-7398	GM	**416156**
0704-7399	GM	416163
0704-7400	GM	**416167**!
0704-7401	GM	416257
0704-7402	GM	**416268**
0704-7403	GM	**416271**!
0704-7404	GM	**416273**
0704-7405	GM	**416278**
0704-7406	GM	**416282**
0704-7407	GM	**416288**!
0704-7408	GM	**416297**
0704-7409	GM	**416313**
0704-7410	GM	416321
0704-7411	GM	416327
0704-7412	GM	**416380**!
0704-7413	GM	**416381**
0704-7414	GM	**416383**
0704-7415	GM	**416394**
0704-7416	GM	**416404**!
0704-7417	GM	**416444**
0704-7418	GM	**416476**!
0704-7419	GM	**416557**
0704-7420	GM	**416657**
0704-7421	GM	**416664**!
0704-7422	GM	416670
0704-7423	GM	**416706**!
0704-7424	GM	**416738**!
0704-7425	GM	**416891**!
0704-7426	GM	**416892**!
0704-7427	GM	**416919**
0704-7428	GM	**416951**
0704-7429	GM	**416956**
0704-7430	GM	417016
0704-7431	GM	**417020**
0704-7432	GM	**417022**
0704-7433	GM	**417040**
0704-7434	GM	**417073**
0704-7435	GM	**417079**
0704-7436	GM	**417082**
0704-7437	GM	**417115**
0704-7438	GM	**417134**
0704-7439	GM	**417158**!
0704-7440	GM	**417172**
0704-7441	GM	**417191**
0704-7442	GM	**417198**
0704-7443	GM	**417205**!
0704-7444	GM	**417210**!
0704-7445	GM	**417211**!
0704-7446	GM	**417223**
0704-7447	GM	**417238**
0704-7448	GM	**417247**!
0704-7449	GM	**417252**
0704-7450	GM	417255
0704-7451	GM	**417258**
0704-7452	GM	417267
0704-7453	GM	**417273**
0704-7454	GM	**417278**
0704-7456	GM	**418028**
0704-7457	GM	**417353**!
0704-7458	GM	**417354**!
0704-7459	GM	**417358**
0704-7460	GM	417359
0704-7461	GM	**417360**
0704-7462	GM	**417361**
0704-7463	GM	**417362**!
0704-7464	GM	417363
0704-7465	GM	417364
0704-7466	GM	**417365**
0704-7467	GM	**417366**!
0704-7468	GM	**417474**
0704-7469	GM	**417480**!
0704-7470	GM	**417485**
0704-7471	GM	**417486**
0704-7472	GM	**417492**
0704-7473	GM	417494
0704-7474	GM	**417495**
0704-7475	GM	**417496**
0704-7476	GM	417497
0704-7477	GM	417498
0704-7478	GM	**417499**
0704-7479	GM	417500
0704-7480	GM	**417501**

! Industrial Size/Type
= The U.S. customer service number is 877-4-TIMKEN. The Canadian customer service numbers are 800-565-4927 (English) and 800-565-0438 (French-Canadian).

Mfr. No.	Name	Zero Duplication or Recommended Industrial
0704-7481	GM	417502
0704-7482	GM	417503
0704-7483	GM	**417504**
0704-7484	GM	**417506**
0704-7485	GM	**417509**
0704-7486	GM	417513
0704-7487	GM	417516
0704-7488	GM	**417518**
0704-7490	GM	417522
0704-7491	GM	**417530**
0704-7492	GM	417531
0704-7493	GM	**417532**
0704-7494	GM	**417533**
0704-7495	GM	417534
0704-7496	GM	417535
0704-7497	GM	417536
0704-7498	GM	417537
0704-7499	GM	**417538**
0704-7500	GM	**417539**!
0704-7501	GM	417540
0704-7502	GM	**417542**
0704-7503	GM	417543
0704-7504	GM	**417544**
0704-7505	GM	**417545**
0704-7506	GM	417547
0704-7507	GM	417548
0704-7508	GM	**417549**!
0704-7509	GM	**417550**
0704-7510	GM	**417551**
0704-7511	GM	**417554**!
0704-7512	GM	**417556**
0704-7513	GM	**417563**
0704-7514	GM	417564
0704-7515	GM	**417567**
0704-7516	GM	**417571**
0704-7517	GM	417584
0704-7518	GM	**417597**
0704-7519	GM	**417598**
0704-7520	GM	**417603**!
0704-7521	GM	**417605**
0704-7522	GM	**417606**
0704-7523	GM	417607
0704-7524	GM	417780
0704-7525	GM	**412920**
0704-7527	GM	**450039**
0704-7528	GM	450044
0704-7529	GM	450054
0704-7530	GM	450073
0704-7531	GM	450089
0704-7532	GM	450104
0704-7533	GM	450111
0704-7534	GM	**450133**
0704-7535	GM	**450143**
0704-7536	GM	450147
0704-7537	GM	450159
0704-7538	GM	**450173**
0704-7539	GM	450177
0704-7540	GM	450260
0704-7541	GM	450269
0704-7542	GM	**450273**
0704-7543	GM	450274
0704-7544	GM	450275
0704-7545	GM	**450279**
0704-7546	GM	450280
0704-7547	GM	450285
0704-7548	GM	**450307**
0704-7549	GM	450311
0704-7551	GM	**450332**
0704-7552	GM	**450339**
0704-7553	GM	**450340**
0704-7554	GM	450343
0704-7555	GM	**450412**
0704-7556	GM	450430
0704-7557	GM	**450446**
0704-7558	GM	**450456**!
0704-7559	GM	450457
0704-7560	GM	450467
0704-7561	GM	**450472**!
0704-7562	GM	**450474**
0704-7563	GM	**450492**
0704-7564	GM	450503=
0704-7565	GM	450516
0704-7566	GM	**450523**
0704-7567	GM	450533
0704-7568	GM	450535
0704-7568	GM	**471264**!
0704-7569	GM	450540
0704-7571	GM	**450604**
0704-7572	GM	**450621**
0704-7573	GM	470645
0704-7574	GM	**450666**
0704-7575	GM	**450693**
0704-7576	GM	**450765**!
0704-7577	GM	450803
0704-7578	GM	450808
0704-7579	GM	**450819**
0704-7580	GM	450869
0704-7581	GM	450965
0704-7582	GM	**450984**
0704-7584	GM	**451078**!
0704-7585	GM	**451143**
0704-7587	GM	451469
0704-7588	GM	**451583**!
0704-7589	GM	**451817**
0704-7591	GM	**451948**
0704-7592	GM	452086
0704-7593	GM	**452222**!
0704-7594	GM	**471619**!
0704-7595	GM	**453182**
0704-7596	GM	**453279**!
0704-7597	GM	**455008**
0704-7598	GM	455020
0704-7600	GM	**455026**
0704-7601	GM	**415027**
0704-7602	GM	**455032**!
0704-7603	GM	455037
0704-7604	GM	455056
0704-7605	GM	**455080**
0704-7606	GM	**455121**
0704-7607	GM	455129
0704-7608	GM	455136
0704-7609	GM	**455144**
0704-7610	GM	**455151**
0704-7611	GM	**455189**
0704-7612	GM	**455191**
0704-7613	GM	455203
0704-7614	GM	**455253**
0704-7615	GM	**455260**
0704-7616	GM	**455280**
0704-7617	GM	455290
0704-7618	GM	**455297**
0704-7619	GM	455311
0704-7620	GM	455328
0704-7621	GM	**455330**!
0704-7622	GM	**455336**
0704-7623	GM	**455396**
0704-7624	GM	**455406**!
0704-7625	GM	**455434**
0704-7626	GM	**455462**
0704-7627	GM	**455471**
0704-7628	GM	455476
0704-7629	GM	**455500**
0704-7630	GM	455509
0704-7632	GM	**455536**
0704-7634	GM	**455576**!
0704-7635	GM	**455583N**!
0704-7636	GM	455592
0704-7637	GM	**455655**!
0704-7638	GM	455661
0704-7639	GM	455685
0704-7640	GM	**415725**=
0704-7641	GM	455820
0704-7642	GM	**455948**
0704-7643	GM	455966
0704-7644	GM	3016
0704-7644	GM	456052
0704-7645	GM	**456105**
0704-7646	GM	**456141**
0704-7647	GM	**456192**
0704-7648	GM	**456305**
0704-7649	GM	**456462**
0704-7650	GM	456464
0704-7651	GM	456890
0704-7652	GM	**457291**
0704-7653	GM	457294
0704-7654	GM	**457295**
0704-7656	GM	457585
0704-7658	GM	470050
0704-7659	GM	**474264**
0704-7660	GM	**474265**
0704-7661	GM	470086
0704-7662	GM	**470088**
0704-7663	GM	**473462**
0704-7664	GM	**472193**!
0704-7665	GM	**470390**
0704-7667	GM	470515
0704-7668	GM	**470530**!
0704-7669	GM	**474272**
0704-7670	GM	**470565**!
0704-7671	GM	**470596**
0704-7672	GM	**470601**
0704-7673	GM	**470605**!
0704-7674	GM	**470687**
0704-7675	GM	**410737**!
0704-7676	GM	**470774**!
0704-7677	GM	**471141**!
0704-7678	GM	**471193**
0704-7679	GM	**471231**!
0704-7680	GM	**471255**!
0704-7681	GM	**471270**!
0704-7682	GM	**471344**
0704-7683	GM	**471354**!
0704-7684	GM	**471407**
0704-7685	GM	**471424**!
0704-7686	GM	**481443**!
0704-7687	GM	**471498**
0704-7688	GM	**471530**
0704-7689	GM	**471532**
0704-7690	GM	**471535**!
0704-7691	GM	**471549**!
0704-7692	GM	**471558**
0704-7693	GM	**471579**
0704-7694	GM	**471612**
0704-7695	GM	**471633**!
0704-7696	GM	**471643**!
0704-7697	GM	**471645**
0704-7698	GM	**471646**!
0704-7699	GM	**471648**
0704-7700	GM	471686
0704-7701	GM	**471688**
0704-7702	GM	**471689**!
0704-7703	GM	**471684**!
0704-7704	GM	471707N
0704-7705	GM	471729
0704-7706	GM	**471733**
0704-7707	GM	**471735**
0704-7708	GM	**471736**
0704-7709	GM	**471737**
0704-7710	GM	**471762**!
0704-7711	GM	**471795**
0704-7712	GM	**471795**
0704-7713	GM	**471801**!
0704-7714	GM	**471808**!
0704-7715	GM	**471818**
0704-7716	GM	**471821**!
0704-7717	GM	**471827**!
0704-7718	GM	**471829**
0704-7719	GM	**471831**!
0704-7720	GM	**471833**
0704-7721	GM	471841
0704-7722	GM	**473258**
0704-7723	GM	**471854**!
0704-7724	GM	**471862**
0704-7725	GM	**471866**!
0704-7726	GM	**472016**!
0704-7727	GM	**472018**
0704-7728	GM	472020
0704-7729	GM	**472029**
0704-7730	GM	**472070**
0704-7731	GM	**472082**
0704-7733	GM	**472150**
0704-7734	GM	**470380**!
0704-7734	GM	472189A!
0704-7735	GM	**472234**
0704-7736	GM	**472299**
0704-7737	GM	**472324**!
0704-7738	GM	**472394**
0704-7739	GM	**472409**!
0704-7740	GM	**474256**
0704-7741	GM	**472452**
0704-7742	GM	**471549**!
0704-7742	GM	472467
0704-7743	GM	**472572**!
0704-7744	GM	**472636**!
0704-7745	GM	**472644**
0704-7746	GM	**471747**!
0704-7747	GM	**473259**
0704-7748	GM	**472705**!
0704-7749	GM	**472826**!
0704-7750	GM	**472843**
0704-7751	GM	**472954**
0704-7752	GM	**473157**
0704-7753	GM	**473179**!
0704-7754	GM	**473210**
0704-7755	GM	**473213**!
0704-7756	GM	**473225**!
0704-7757	GM	**473226**
0704-7758	GM	**473228**!
0704-7759	GM	**473229**!
0704-7760	GM	**473230**!
0704-7761	GM	**473235**!
0704-7762	GM	**473237**!
0704-7763	GM	**473239**!
0704-7764	GM	**473242**
0704-7765	GM	**473243**
0704-7766	GM	**473244**!
0704-7767	GM	**473245**!
0704-7769	GM	**473317**
0704-7771	GM	**473405**
0704-7772	GM	473406!
0704-7773	GM	473407
0704-7774	GM	473412
0704-7775	GM	473413
0704-7776	GM	**473415**
0704-7777	GM	**473419**!
0704-7778	GM	**473420**
0704-7779	GM	473428
0704-7780	GM	473435

! Industrial Size/Type
= The U.S. customer service number is 877-4-TIMKEN. The Canadian customer service numbers are 800-565-4927 (English) and 800-565-0438 (French-Canadian).

Mfr. No.	Name	Zero Duplication or Recommended Industrial
0704-7781	GM	473436
0704-7782	GM	473437
0704-7783	GM	**473438**
0704-7784	GM	**473440**!
0704-7785	GM	**473442**!
0704-7786	GM	**474274**
0704-7787	GM	**473444**!
0704-7788	GM	**473447**
0704-7789	GM	**473448**
0704-7790	GM	**473450**!
0704-7791	GM	**473452**
0704-7792	GM	473453
0704-7793	GM	**473457**!
0704-7794	GM	**473458**!
0704-7795	GM	**473460**
0704-7796	GM	**473461**!
0704-7797	GM	**473463**
0704-7798	GM	**473464**
0704-7799	GM	**473466**
0704-7800	GM	**473467**
0704-7801	GM	**410308**!
0704-7801	GM	473468
0704-7802	GM	**473473**
0704-7803	GM	**473474**
0704-7804	GM	**473475**
0704-7805	GM	**473517**!
0704-7807	GM	**475384**
0704-7808	GM	**415035**
0704-7808	GM	475845!
0704-7811	GM	476535
0704-7812	GM	476820
0704-7813	GM	**476842**
0704-7814	GM	**477069**
0704-7815	GM	480281!
0704-7816	GM	**474278**
0704-7817	GM	480491
0704-7818	GM	**480821**!
0704-7819	GM	**480844**
0704-7821	GM	**481163**!
0704-7822	GM	**481181**!
0704-7824	GM	**480581**
0704-7825	GM	**481397**
0704-7826	GM	**481443**!
0704-7827	GM	**481481**
0704-7828	GM	**481528**
0704-7829	GM	481534
0704-7830	GM	**481537**
0704-7831	GM	**481568**!
0704-7832	GM	**481792**
0704-7833	GM	481834
0704-7834	GM	481859
0704-7835	GM	**481864**
0704-7836	GM	481992
0704-7837	GM	**482163**!
0704-7838	GM	**482253**
0704-7839	GM	**482309**
0704-7840	GM	**482310**
0704-7841	GM	**484054**
0704-7842	GM	**484058**
0704-7867	GM	99062
0704-7868	GM	99076
0704-7869	GM	99087
0704-7870	GM	99098
0704-7872	GM	99112
0704-7873	GM	99125
0704-7874	GM	99138
0704-7875	GM	99143
0704-7876	GM	99149
0704-7877	GM	99155
0704-7878	GM	99156
0704-7879	GM	99162
0704-7880	GM	99168
0704-7881	GM	99174
0704-7882	GM	99176
0704-7883	GM	99181
0704-7884	GM	99187
0704-7885	GM	99199
0704-7887	GM	99205
0704-7888	GM	99212
0704-7889	GM	99218
0704-7890	GM	99225
0704-7891	GM	99233
0704-7892	GM	99237
0704-7893	GM	99243
0704-7894	GM	99248
0704-7895	GM	99250
0704-7896	GM	99256
0704-7897	GM	99259
0704-7898	GM	99262
0704-7899	GM	99272
0704-7900	GM	99274
0704-7901	GM	99275
0704-7902	GM	99282
0704-7903	GM	99287
0704-7904	GM	99293
0704-7906	GM	99300
0704-7907	GM	99312
0704-7908	GM	99324
0704-7909	GM	99325
0704-7910	GM	99337
0704-7911	GM	99350
0704-7912	GM	99362
0704-7913	GM	99367
0704-7914	GM	99372
0704-7915	GM	99387
0704-7916	GM	99393
0704-7917	GM	99399
0704-7919	GM	99450
0704-7920	GM	99499
0704-7921	GM	99599
0704-7922	GM	99700
0704-8120	GM	**471344**
0704-8199	GM	**410496**!
0704-8449	GM	**471255**!
0704-8689	GM	5551
0704-8691	GM	**471442**
0704-8694	GM	40059S
0704-8698	GM	**471787**
0704-8724	GM	455024
0704-8725	GM	**415379**
0704-8725	GM	**415379**!
0704-8727	GM	**471981**
0704-8733	GM	**473455**!
0704-8737	GM	43071S
0704-8740	GM	**471750**!
0704-8747	GM	340823
0704-8748	GM	**473239**
0704-8752	GM	**471870**!
0704-8756	GM	340413
0704-8759	GM	45013S
0704-8761	GM	**473424**!
0704-8765	GM	40566S
0704-8990	GM	292594
0704-9112	GM	455204
0704-9195	GM	**471271**!
0704-9874	GM	**471267**
0704-9877	GM	**350364**
0704-9878	GM	**471267**!
0704-9882	GM	**470530**!
0704-9883	GM	**473464**
0704-9883	GM	**473464**!
0704-9884	GM	**410987**!
0704-9885	GM	**471224**!
0704-9886	GM	**470682**
0704-9887	GM	**470625**!
0704-9888	GM	**450593**!
0704-A171	GM	6863S!
0704-A184	GM	335924N
0704-A185	GM	340356
0704-A194	GM	**471750**!
0704-A195	GM	**470530**!
0704-A197	GM	**471766**!
0704-A198	GM	**472636**!
0704-A201	GM	**417316**!
0704-A203	GM	**416888**!
0704-A206	GM	442251
0704-A211	GM	**412943**
0704-A212	GM	**473450**
0704-A213	GM	**472572**!
0704-A216	GM	**471529**
0704-A228	GM	**410308**!
0704-A229	GM	**411394**!
0704-A232	GM	**473231**
0704-A234	GM	**471870**!
0704-A237	GM	**471138**!
0704-A238	GM	**471341**!
0704-A239	GM	**471267**!
0704-A240	GM	**413248**
0704-A245	GM	**415007**
0704-A247	GM	**476470**
0704-A248	GM	**416125**!
0704-A251	GM	**416891**!
0704-A253	GM	**417269**!
0704-A256	GM	**416167**!
0704-A257	GM	**411376**!
0704-A259	GM	**415302**
0704-A261	GM	**418028**
0704-A261	GM	455137!
0704-A265	GM	**417357**
0704-A265	GM	455192!
0704-A267	GM	**415725**!
0704-A268	GM	**417601**
0704-A269	GM	**417159**
0704-A270	GM	**416404**!
0704-A273	GM	**417262**!
0704-A274	GM	**417350**!
0704-A277	GM	**417191**
0704-A277	GM	456585
0704-A282	GM	**415458**!
0704-A283	GM	**471272**!
0704-A285	GM	482126
0704-A370	GM	**417349**
0704-A372	GM	**476470**!
0704-A372	GM	**476470**
0704-A383	GM	**415483**
0704-A443	GM	**470605**!
0704-A473	GM	351028
0704-B125	GM	**415027**!
0704-B125	GM	**415027**
0704-B126	GM	**416865**!
0704-B128	GM	**417196**!
0704-B130	GM	**471413**!
0704-B360	GM	450089
0704-B362	GM	**411245**!
0704-B363	GM	**417488**!
0704-B364	GM	**456105**
0704-B367	GM	**417603**!
0704-B368	GM	**473225**!
0704-B884	GM	**415482**
0704-C017	GM	**473197**!
0704-C019	GM	**472179**
0704-C082	GM	442507
0704-C197	GM	**473238**!
0704-C341	GM	**470712**
0704-C342	GM	**471652**
0704-C509	GM	**473224**!
0704-C723	GM	**330385**
0704-C739	GM	**473423**
0704-C921	GM	**55301S**
0704-D017	GM	**471466**!
0704-D022	GM	45825S
0704-D104	GM	3945
0704-D195	GM	**471424**!
0704-D197	GM	**472179**
0704-D263	GM	415146!
0704-D263	GM	**415991**
0704-D268	GM	**472397**!
0704-D276	GM	**410102**
0704-D281	GM	41075S
0704-D296	GM	55469
0704-D318	GM	5526
0704-D836	GM	**450326**
0704-E051	GM	**471141**!
0704-E113	GM	**472016**!
0704-E756	GM	5924
0704-E812	GM	**471762**!
0704-E924	GM	**417344**!
0704-E925	GM	204020
0704-E925	GM	204505!
0704-E998	GM	**472150**
0704-E999	GM	**473214**!
0704-F079	GM	**471267**!
0704-F091	GM	**476470**
0704-F093	GM	**472012**
0704-F095	GM	**473459**
0704-F223	GM	**473467**!
0704-F268	GM	**416229**
0704-F294	GM	**416664**!
0704-F372	GM	**417554**!
0704-F433	GM	455556
0704-F770	GM	**472193**!
0704-F772	GM	**474278**
0704-F772	GM	6859S
0704-F773	GM	**471766**!
0704-F775	GM	**473229**
0704-F791	GM	**417486**
0704-F813	GM	**471271**!
0704-F815	GM	**415960**
0704-F816	GM	**415984**!
0704-F833	GM	**471984**
0704-G163	GM	**481443**!
0704-G311	GM	**417171**!
0704-G533	GM	**472492**!
0704-G586	GM	**473459**!
0704-G600	GM	**476470**
0704-G794	GM	**415449**
0704-G802	GM	240731
0704-G804	GM	**450593**!
0704-G807	GM	**471787**!
0704-G808	GM	**471787**!
0704-G812	GM	**473425**
0704-G813	GM	**472354**
0704-G814	GM	**472354**!
0704-G817	GM	340847
0704-G821	GM	**471424**!
0704-G822	GM	**472924**!
0704-G823	GM	**472397**!
0704-G824	GM	40301S
0704-G825	GM	**470530**!
0704-G826	GM	**472012**
0704-G829	GM	6626S
0704-G831	GM	**473573**
0704-G832	GM	**413246**
0704-G835	GM	**416921**!
0704-G837	GM	3893V
0704-G838	GM	**470954**
0704-G843	GM	240698
0704-G844	GM	**471466**!

! Industrial Size/Type

Mfr. No.	Name	Zero Duplication or Recommended Industrial
0704-G898	GM	473179
0704-G899	GM	6808N
0704-G900	GM	43089S
0704-G902	GM	415988
0704-G903	GM	9568
0704-G907	GM	345146
0704-G908	GM	481163!
0704-G917	GM	473454
0704-G922	GM	450084!
0704-G925	GM	455267
0704-G928	GM	473427
0704-H287	GM	473422
0704-H575	GM	415991
0704-H577	GM	472644
0704-H603	GM	472157
0704-H604	GM	471652
0704-H614	GM	474278!
0704-H648	GM	473235
0704-H678	GM	417158!
0704-H724	GM	472299
0704-H728	GM	203005!
0704-H728	GM	205005
0704-J015	GM	415725!
0704-J298	GM	446927!
0704-J499	GM	470460
0704-J744	GM	5133
0704-K492	GM	J1113
0704-K555	GM	40208
0704-K652	GM	340826
0704-K654	GM	351487
0704-K972	GM	330699!
0704-K986	GM	471272
0704-K988	GM	417621
0704-M088	GM	474265!
0704-M139	GM	471554!
0704-M142	GM	6547
0704-M147	GM	204038
07040808	GM	471646!
07041102	GM	470004!
07041104	GM	471442!
07041116	GM	471255!
07041254	GM	415234!
07041806	GM	471689!
07041989	GM	472185!
07041AB	CASE	417316!
07042086	GM	357302
07042086	GM	415991
07042110	GM	471795
07042356	GM	451583!
07042492	GM	350974!
07042870	GM	323138!
07042873	GM	450129
07042873	GM	472826!
07042962	GM	450375!
07042962	GM	6936S!
07042962	GM	9845
07043020	GM	471195!
07043236	GM	471472!
07043320	GM	471652
07043324	GM	474276!
07043335	GM	473236
07043384	GM	471551!
07043635	GM	471466
07044232	GM	471765!
07044352	GM	455079!
07044352	GM	55079
07044880	GM	50199S!
07044880	GM	6863S!
07045479	GM	471267!
07045707	GM	415029
07045707	GM	416125!
07046084	GM	474255
07046390	GM	471785!
07046522	GM	415449!
07046543	GM	470506!
07046620	GM	417546!
07046749	GM	417596
07047187	GM	470409!
07047187	GM	50409
07047195	GM	470606!
07047206	GM	473244!
07047206	GM	55087=
07047225	GM	415442!
07047225	GM	55442
07047231	GM	415857!
07047258	GM	476838!
07047278	GM	312518!
07047278	GM	342518
07047312	GM	410989
07047312	GM	470989
07047455	GM	417343!
07047526	GM	474273
07047570	GM	450557
07047570	GM	471255!
07047583	GM	471653!
07047666	GM	470487!
07047809	GM	415995!
07047823	GM	471195!
07047871	GM	99100
07047871	GM	99101
07049881	GM	471466!
0704A196	GM	470954!
0704A199	GM	471224!
0704A200	GM	472258!
0704A208	GM	470059
0704A208	GM	470380!
0704A219	GM	450165
0704A219	GM	471801!
0704A221	GM	471619!
0704A222	GM	471787!
0704A236	GM	473227
0704B282	GM	471224!
0704B356	GM	471570!
0704B358	GM	471750!
0704B882	GM	416267!
0704C508	GM	471192
0704D149	GM	450398
0704D149	GM	471267!
0704F097	GM	470530!
0704F819	GM	470712!
0704F832	GM	450593!
0704F949	GM	450765!
0704F949	GM	50421
0704G164	GM	473238
0704G164	GM	50082
0704G803	GM	450593!
0704G803	GM	450593!
0704G810	GM	473462!
0704G815	GM	473231
0704G906	GM	470764!
0704G906	GM	50764
0704H249	GM	417487
0704H602	GM	471750!
0704H602	GM	50150
0705019	THIOK	415263
0708-18440LUP	JN-MN	180X210X15
0709-7918	GM	99424
07091VM	TRSCM	240735
07091VM	TRSCM	312518!
070HH104	SPICE	473228!
070HH111	DANA	5865
070HH114	SPICE	477163N
070HH120	DANA	416556!
070HH132	DANA	415437
070HH132	DANA	415437!
070HH133	SPICE	370131A
070HH133	SPICE	380131A
070HH134	SPICE	370003A
070HH135	SPICE	370124A
070HH136	DANA	456618
070HH137	DANA	415958!
070HH137	DANA	415958
070HH139	SPICE	415088
070HH152	SPICE	370119A
070HH152	VIC	370119A
070HH163	SPICE	473677
070HH171	DANA	472299
070HH187	SPICE	416865
0710144000	FREIG	471413!
071061VCY	TRSCM	240816
07109	JAC	472319
071118SM	TRSCM	1049
07111SB	TRSCM	254270!
07111VB	TRSCM	343185
07111VC	TRSCM	254270
07111VC	TRSCM	343185
0712-10379LUP	JN-MN	416239!
0712-12481LUP	JN-MN	416077
07122SB	TRSCM	470954
07122SB	TRSCM	470954!
07122SC	TRSCM	470954
07122TB	TRSCM	470954
07122TB	TRSCM	470954!
07122VTB	TRSCM	470954
07123TC	TRSCM	470954
0712B	GOODM	471570!
07132TB	TRSCM	480821!
07134SSTB	TRSCM	471554
07142SB	TRSCM	471567!
07142TB	TRSCM	471567!
07143SB	TRSCM	481568!
0714B	GOODM	470590
07152TL	TRSCM	471498
071607B	HARWA	7X16X7
07162TB	TRSCM	471643!
07172SB	TRSCM	471684!
071822SL	TRSCM	450033
07182SB	TRSCM	470390
071947	ALLCH	416339
071947	ALLCH	455031!
07203SB	TRSCM	472649
072207A	HARWA	7X22X7
0725-12094LUP	JN-MN	416044
0725-18709LPD	JN-MN	415116
0725-8951LUP	JN-MN	415116
07329AB	CASE	417211!
073526	AUTOZ	TCS45639-2
073545	AUTOZ	TCS45718
073666	AUTOZ	TCS45958
073784	AUTOZ	BS40387
073849	AUTOZ	BS40652
074065	EATON	410686N
07412M1	C-R	330385!
07412T8	C-R	330385!
07424BX	CASE	450984
074961	ALLCH	412040
074962	ALLCH	470898!
0750-10096LPD	JN-MN	415551
0750-10099LUP	JN-MN	415551
0750-11693LUP	JN-MN	415867
0750-15015LPD	JN-MN	415551
0750-9973LUP	JN-MN	415867
07512M1	C-R	330385!
075132TB	TRSCM	471554!
075132TB	TRSCM	471554
075492	GMC	417082
075767	ALLCH	455820
07580	IH	350435
075978	ALLCH	471276
075HMS12	C-R	330385!
0762-12209LUP	JN-MN	416102
0762-17780LDS	JN-MN	417598
0762-5291LUP	JN-MN	416102
0762-9360LUP	JN-MN	417598
076243	GMC	471689!
076717	GMC	415458
076793	GMC	472179
076960	ALLCH	6703S
0775-10688LPD	JN-MN	455406!
0775-15527LDS	JN-MN	455406!
0775-8941LUP	JN-MN	457299
0775-8952LUP	JN-MN	455406!
077934	GMC	416288!
078016	HYST	473459
078133SB	TRSCM	481443!
078329	ALLCH	471689!
078502	ALLCH	450400
078593	ALLCH	416167!
0787-10021LUP	JN-MN	455121
0787-18528LUP	JN-MN	200X230X15!
0787-9832LUP	JN-MN	455397
0787-9886LUP	JN-MN	455121
079276	ALLCH	6703S
079351	ALLCH	6863S!
079567	GMC	450084!
079966	ALLCH	471267!
0800-12929LUP	JN-MN	417601
0800-14198LUP	JN-MN	417602!
0800-15076LDS	JN-MN	417602!
0800-15199LDS	JN-MN	7131
0800-16080LDS	JN-MN	415656
0800-16311LUP	JN-MN	417602!
0800-16525LDS	JN-MN	415052
0800-17788LDS	JN-MN	417602!
0800-5609LUP	JN-MN	417602!
080011035LUP	JN-MN	417600
0803162	Y-T	411330!
080457	ALLCH	472164!
080599	GMC	473236!
080609	GMC	473446
08079	JAC	471539!
080974	GMC	411253!
08111VB	TRSCM	240733
081121SZ	TRSCM	471539
081133SB	TRSCM	353131
081134SA	TRSCM	471231!
081142TL	TRSCM	474253
081162TB	TRSCM	471645
081162VSB	TRSCM	471645!
081172SB	TRSCM	471686
0812-10347LUP	JN-MN	455123
0812-10700LPD	JN-MN	455123
08121SB	TRSCM	254287!
08121VB	TRSCM	7840S
081241VL	TRSCM	5976S
081280	GMC	472397!
0812B	GOODM	471224!
081302VL	TRSCM	340413
08131VM	TRSCM	440131!
08132SB	TRSCM	471267!
08132SB	TRSCM	471267!
08132TB	TRSCM	471267
08132TBY	TRSCM	471267!
081369	GMC	472179
081370	GMC	415449!
08142SB	TRSCM	471570!
08142SB	TRSCM	471570
08142TB	TRSCM	471570!

! Industrial Size/Type
= The U.S. customer service number is 877-4-TIMKEN. The Canadian customer service numbers are 800-565-4927 (English) and 800-565-0438 (French-Canadian).

Mfr. No.	Name	Zero Duplication or Recommended Industrial
0814477	O-M	472475
08152SB	TRSCM	350877
08153TC	TRSCM	471570
0815B	GOODM	471733
081607A	HARWA	8X16X7
081626	GMC	416654
08162TB	TRSCM	471646!
08172TB	TRSCM	470590
0817348LPD	JN-MN	474253
08182SB	TRSCM	471730
082025	L&N	240385
082026	L&N	240462
082179	ALLCH	200640
082207A	HARWA	8X22X7!
082207A	HARWA	9X22X7!
082407A	HARWA	8X24X7
0825-12149LUP	JN-MN	415124
083011	GMC	417316!
08319	JAC	340787
083917	GMC	473367!
083917	GMC	473367
084-409-189B	AUDI	1188
084-409-189B	VW	1188
08406294	BL-KN	472070
08447	JAC	471466
08447A	JAC	471466!
0850-10371LUP	JN-MN	417603!
0850-15024LDS	JN-MN	416394
0850-8835LUP	JN-MN	417604
0850-8954LUP	JN-MN	417604
08510	JAC	470954!
08546HT	CASE	200354
08583AB	CASE	415458!
085922	AUTOZ	35001
0862-12441LPD	JN-MN	417567
087111VZ	TRSCM	340850
08712M1	C-R	350156
08712M1	C-R	473096!
08714M1	C-R	472810!
08719	JAC	471224!
08721	NAK	85X125X12
08731	JAC	472311!
0875-13789LUP	JN-MN	415128
0875-16179STLUP	JN-MN	455966
08754AB	CASE	455566
08759AB	CASE	455566
08811	JAC	471571
088311113C	AUDI	222540
088311113C	AUDI	25X40X7!
08848	NAK	15X40X7
088645	GMC	450165
088645	GMC	471801!
0887-10333LUP	JN-MN	416657
0887-13436LPD	JN-MN	455129
0887-8943LPD	JN-MN	455129
0887-9292LPD	JN-MN	416657
089-409-529A	VW	239146
08994AB1	CASE	415001!
0900-11552LPD	JN-MN	55301S
0900-14490LDS	JN-MN	455462
0900-16554LUP	JN-MN	455476*
0900-8819LUP	JN-MN	415090
0900-8868LUP	JN-MN	455462
0900-8948LUP	JN-MN	415090
090148	LOKWD	340817
090190	LOKWD	472258!
09020AB	CASE	415449!
0904021	ADAMS	415483!
0906006	ADAMS	415458!
0906027	ADAMS	472164!
0906035	ADAMS	417171!
090655	ALLCH	471224!
09074AB1	CASE	240736
091023	FRUEH	417172
0911045	ADAMS	472164!
0911046	ADAMS	472018
0911047	ADAMS	417349
0911105	ADAMS	417349
0912-9891LUP	JN-MN	55532=
09142TB	TRSCM	472324!
09142VSB	TRSCM	472324
09143SA	TRSCM	451583!
09143SB	TRSCM	451583!
09162SB	TRSCM	471648
0916B	GOODM	471763
09172SB	TRSCM	471688
09181WPB	TRSCM	240457
09203SB	TRSCM	482310
092407A	HARWA	9X24X7
0925-10252LPD	JN-MN	415219
0925-12831STLPD	JN-MN	415219
0925-16306LDS	JN-MN	415219
0925-17020LDS	JN-MN	415219
092607A	HARWA	9X26X7
09262	NAK	90X115X12
09282-35002	SUZUK	223540
09282-48003	SUZUK	224820
09283-15002	SUZUK	221510
09283-20028	VILA	710342
09283-20040	SUZUK	222030
09283-26010	SUZUK	222630
09283-26016	SUZUK	222630
09283-28010	SUZUK	222860
09283-32009	SUZUK	710306
09283-32016	SUZUK	710310
09283-32016	VILA	710310
09283-32022	SUZUK	3476
09283-32022	SUZUK	710310
09283-32023	SUZUK	471413!
09283-32026	SUZUK	710310
09283-32038	SUZUK	710310
09283-32040	SUZUK	710310
09283-32042	SUZUK	710310
09283-35008	SUZUK	223553
09283-35020	SUZUK	1170
09283-35025	SUZUK	223552
09283-35037	SUZUK	223552
09283-35037	SUZUK	34X62X10
09283-40013	SUZUK	350572
09283-40022	SUZUK	710523
09283-40027	SUZUK	710523
09283-42003	SUZUK	224200
09283-42005	SUZUK	224200
09283-42008	SUZUK	224200
09283-44006	SUZUK	224462
09283-44009	SUZUK	224462
09283-45011	SUZUK	710521
09283-48003	SUZUK	224820
09283-48007	SUZUK	224820
09283-49002	SUZUK	4904
09283-50001	SUZUK	1948
09283-53001	SUZUK	710175
09283-54001	SUZUK	710239
09283-56002	SUZUK	710393
09283-60003	SUZUK	710333
09283-60005	SUZUK	710333
09283-68001	SUZUK	710334
09283-68002	SUZUK	710334
09283-98001	SUZUK	710520
0928320028	SUZUK	222075
0928320028	SUZUK	710342
0928335024	SUZUK	223552
0928340009	SUZUK	1213N
0928344007	SUZUK	224462
0928344007	SUZUK	44X62X8!
0928350002	SUZUK	1948
09284-45001	SUZUK	710193
09284365	ALLCH	415854
09285-00002	SUZUK	710330
09286-64001	SUZUK	710256
09286-75001	SUZUK	710240
09289-48004	SUZUK	710255
092895	CATER	412473!
092926	HI-EQ	471766!
093132SB	TRSCM	471015!
093132TB	TRSCM	340787
093132TB	TRSCM	471015!
093132TB	TRSCM	51015
093162SB	TRSCM	471647
093172SB	TRSCM	474252!
0933971	ALLCH	470898
09345AB	CASE	417344!
09368AB	CASE	471579
0937-8823LPD	JN-MN	415871
09372	JAC	240733
093801	CATER	J1137=
093917	GMC	473367!
093917	GMC	473367
09391AB	CASE	450621
0940661990	CLIN	470601
09439	NAK	32X58X8!
09487	NAK	78X105X10
0950-16986LDS	JN-MN	417606
0950-8824LUP	JN-MN	417606
09504CH	CASE	472287!
0950909	ITM	35316
0950950	ITM	35315
0951585	ITM	35292
09516AB	CASE	473475
0952009	ITM	25598
0952515	ITM	35127
095321243	VW	225110
095321243D	VW	225110
095580	ALLCH	417269!
0956034	ITM	35094
095984	GMC	416654
096184SB	TRSCM	450040
0962-15171LDS	JN-MN	416381
096759	ALLCH	417362!
096760	ALLCH	471271!
096761	ALLCH	472164!
09708AB	CASE	415458!
09709AB	CASE	415138!
097127	ALLCH	471224!
097342	ALLCH	415196!
0975-13809LUP	JN-MN	55078S
0975-14832STLPD	JN-MN	55239=
0980912	ITM	TCS45873-1
0981000	ITM	TCS45719
098348007	SUZUK	224820
098657	AUTOZ	16315
0987-7340LUP	JN-MN	55224*=
0987501	ITM	TCS45472
09912M1	C-R	471103!
09914M1	C-R	6863S!
09914Q6	C-R	6863S!
09916M1	C-R	471442!
099593	GMC	470059
099593	GMC	470380!
099856	ALLCH	240023
0B443	HART	481537
0CB521	CLSTL	480630!
0E1557B	FUNK	416888
0N307	CATER	415303!
0S18891	SKF	9316
0T265A	MINNM	417238
1-88AX253	MACK	417546!
1-C193	NOVO	473016!
1-C198	NOVO	50075=
1-C199	NOVO	471821!
1-CW109	NOVO	415995!
1-EC-0424	WHITE	415437
1-ES12699	ROCKW	415449!
1-ES12783	ROCKW	415995!
1-ES13359	ROCKW	416888!
1-ES13360	ROCKW	417533
1-ES13362	ROCKW	415035!
1-ES13362	ROCKW	415035
1-ES13363	ROCKW	417504
1-ES13406	ROCKW	417621!
1-ES13802	ROCKW	416865!
1-ES14393	ROCKW	415138!
1-ES14801	ROCKW	417354!
1-ES15068	ROCKW	415138!
1-ES15112	ROCKW	417196!
1-ES15113	ROCKW	417181!
1-ES16007	ROCKW	415351!
1-ES16098	ROCKW	473475
1-ES16325	ROCKW	416865!
1-ES16652	ROCKW	481073
1-ES17764	ROCKW	416654!
1-ES1851	ROCKW	415035
1-ES18511	ROCKW	415035
1-ES18576	ROCKW	471267!
1-ES18612	ROCKW	415995!
1-ES20176	ROCKW	471570!
1-JG1	KEN	40468
1-JG10	KEN	412027
1-JG2	KEN	472164!
1-JG3	KEN	416130!
1-JG4	KEN	6638S
1-JG5	KEN	7866S
1-JG6	KEN	416654!
1-JG8	KEN	475348N
1-JG9	KEN	416288
1-SPC22A	NOVO	471570!
1.5G18061	NATEN	417433
10	BL-KN	415035!
10	BL-KN	415035
10-51	DEXTR	370150A
10-56	DEXTR	417172
10-EJR20	MACK	472560N!
100	UNIVE	471689!
1000	UNIVE	417020
1000-044-003	WARNR	4143
1000-044-015	WARNR	9613S
1000-044-046	WARNR	473237
1000-044-048	WARNR	4141
1000-044-051	WARNR	4141
1000-044-052	WARNR	4143
1000-044-054	WARNR	473237
1000-16365LUP	JN-MN	417020
1000-17846LDS	JN-MN	417020
1000-9830LUP	JN-MN	417605
100001CA	SPG	710072
100002CA0	SPG	710073
1000044053	WARNR	472572
1000057M1	MASSE	472311!
100007	SPG	8610
100008CA	SPG	225275
100011CA	SPG	1937
10001200	UNIVE	417020
100013CA	SPG	1938
100014CA	SPG	1939
100018CA	SPG	225673
100020CA	SPG	1943
100021	MC-CL	471224!
100021	SCOT	471224!

! Industrial Size/Type * Minor Width Difference

= The U.S. customer service number is 877-4-TIMKEN. The Canadian customer service numbers are 800-565-4927 (English) and 800-565-0438 (French-Canadian).

Mfr. No.	Name	Zero Duplication or Recommended Industrial
100022CA	SPG	1205
100022CA	SPG	1205N
1000233	C-R	457096V*
10002406	TROS	**471103**!
1000243	C-R	457096V*
10002804	TROS	6863S!
10002805	TROS	50199S!
10002805	TROS	6863S!
10002806	TROS	50199S!
10002806	TROS	6863S!
10003204	TROS	**471442**!
10003205	TROS	**471442**!
10003206	TROS	**471442**!
100034BXO	SPG	100034
10003604	TROS	**472705**!
10003606	TROS	**472705**!
100040	C-R	**417605**
10004004	TROS	351487
100041	C-R	**417605**
100042	C-R	**417605***
100044	C-R	456483*=
10004460	FIAT	223035
100044HA	IH	340787
100045	C-R	**417020**
10004802	TROS	240735
10004LPD	JN-MN	**417344**!
10004LUP	JN-MN	**417344**!
10005	SPG	**471526**!
100050	C-R	**417020**
1000503M1	MASSE	**471466**!
100051	C-R	**417020**
10005175	GMC	3698
10005176	SELAS	3698
1000549M1	MASSE	**471224**!
1000580	C-R	**417020**
100066R91	IH	**416654**
100067BX	SPG	100067
100075	C-R	**417020**
10008	C-R	**471689**
100080014.5	TROS	**417602**!
100098	CUMMI	**481397**
1000A80012	TROS	**417602**!
1001159B	HARWA	100X115X9
100115R91	IH	**471224**!
10012	C-R	**471103**!
1001206TA	TRSCM	**417020**
100120R	CASE	473414
10012M1	C-R	**471103**!
100130	CLARK	55646=
10014	C-R	6863S!
10014013A	HARWA	100X140X13
100141BX	SPG	100141
100142BX	SPG	100263
100142SB	TRSCM	**472311**!
100142SB	TRSCM	**472311**
100142SC	TRSCM	**472311**
100142TC	TRSCM	**472311**!
10014CP	C-R	6863S!
10015	C-R	320457
100150	MICH	**471224**!
100154BX	SPG	100154
10016	C-R	**471442**!
100162	MICH	**471649**!
100162	UNIVE	**471649**!
100162SLD	MICH	**471649**!
100166VD	SPG	**415995**
10016M1	C-R	**471442**!
10016Q6	C-R	**471442**!
10016T3	C-R	**471442**!
100170	MC-CL	**350435**
1001706	WITTE	**470530**!
100171	MC-CL	**471192**
10017172	GMC	3698
100175	MICH	**471689**!
100175	UNIVE	**471689**!
100176	MC-CL	450159
10017LPD	JN-MN	**417546**!*
10017LUP	JN-MN	**417546**!
10018	C-R	**472705**!
1001816M1	MASSE	**471554**!
100182	UNIVE	**450593**!
100182TB	TRSCM	**450593**!
100183	MICH	**450593**!
1001837	MASSE	**471649**!
10018632	GMC	3698
100187	MICH	**471733**
100187	UNIVE	**471733**
10019	BU-SP	**415138**!
10019	C-R	**471689**
100190VAR	SPG	100190
1001938M1	MASSE	353132
100196BX	SPG	100196
100198	MICH	**471744**!
100198	UNIVE	**471744**!*
100199TD	SPG	100199
100200	MICH	**471760**
100200	UNIVE	**471760**
1002021	WITTE	**473467**!
100202SB	TRSCM	**471619**!
100206	MICH	**471619**!
100206	UNIVE	**471619**!
10021	C-R	**471689**!
10021LPD	JN-MN	**455121**
10021LUP	JN-MN	**455121**
10022	AMC	450033
10023	C-R	**471689**!
10024A3	DIA	5481$
100251CA	SPG	3357
10026	FITZ	**472082**
100269	CLARK	**473234**
10027	C-R	204005
10030	C-R	203005!
10030-D2	REO	370007A
10030501	WITTE	**473467**!
10031	C-R	204005
100310BX	SPG	100310
1003344	ALLCH	415145N=
10033593	GMC	224255*
10033594	GMC	710179
10034	C-R	203005!
10034	C-R	205005
10034D5	DIA	**415458**!
10034R	IH	**471785**!
10035	C-R	204005
100353	GMC	**471750**!
100355BX	SPG	100355
100356BX	SPG	100557
10035741	GMC	425RR
10035LPD	JN-MN	**473232**!
10035LUP	JN-MN	**473232**!
10036286	GMC	9845
100362CA	SPG	1974
100365CA	SPG	1932
100366CA	SPG	710166
10036788	GMC	3698
10036LPD	JN-MN	**455079**!*
10036LUP	JN-MN	**455079**!
10037A	C-R	**412473**!
100383TX	SPG	100383
100383TXA	SPG	100383
100384TX	SPG	100384
1004	UNIVE	**417570**
10040	C-R	**450593**!
100408	READY	**471763**
10041	C-R	**450593**!
100412	VICK	200354
100412VGR	SPG	5370
100414	CLARK	345146
100419	CLARK	40316S
1004416M1	MASSE	**471264**
1004418M1	MASSE	240119
10044LPD	JN-MN	**416706**!
10044LUP	JN-MN	**416706**!
100452BX	SPG	100452
10046337	GMC	5778
100469BX	SPG	100469
10047	C-R	**450593***=
100471BX	SPG	100471
1004790	KELSE	**253099**
1004899M1	MASSE	**472560N**
10049	C-R	**450593**!
10049	C-R	**450593**
10049	SPG	**471750**!
100490BX	SPG	100490
1004911	ALLCH	**471267**!
100496	MC-CL	**471267**!
100497V	SPG	710452
10050	C-R	**450593**!
10050	C-R	**450593**
10050LPD	JN-MN	**415458**!
10050LUP	JN-MN	**415458**!
100518BX	SPG	100518
10052	CLARK	**416956**
100522	CLARK	**415449**!
10053	C-R	**450593**!
10053	C-R	**450593**
10053LPD	JN-MN	450165
10053LPD	JN-MN	**471801**!
10053LUP	JN-MN	450165
10053LUP	JN-MN	**471801**!
10054	C-R	**450593**!
10054	C-R	**450593**
10054563	GMC	331210V
10054563	GMC	5210
10054LUP	JN-MN	**473234**!
100550VJ8	SPG	719316
10055LPD	JN-MN	**470625**!
10055LUP	JN-MN	**470625**!
100564	MC-CL	**481443**!
100566VA	SPG	100566
10057	C-R	240457*
10057LPD	JN-MN	**416339**
10057LPD	JN-MN	455031!
10057LUP	JN-MN	**416339**
10057LUP	JN-MN	455031!
100584	MC-CL	**481443**!
100586	CLARK	450129
100586	CLARK	**472826**!
100587	CLARK	451469
10058LPD	JN-MN	**471766**!
10058LUP	JN-MN	**471766**!
100593BG	SPG	100593
100598	CLARK	45187S
10059S	NATL	410059
10059S	NATL	**470380**!
10059S	SPG	410059
10059S	SPG	**470380**!
10059SS	JN-MN	353132
10060	C-R	240457*
1006050	WITTE	340771
100608X	SPG	100400V
10060LPD	JN-MN	**473010**!
10060LUP	JN-MN	**473010**!
100610BG	SPG	100610
10062	SPG	**474264**
100624VJ8	SPG	4525V
10062LPD	JN-MN	**417596**
10062LUP	JN-MN	**417596**
10063	DEXTR	370219A
10063LPD	JN-MN	**416364**!
10063LUP	JN-MN	**416364**!
100641SSR	SPG	100641
10065600	GMC	4307V!
10065600	GMC	5273
100658HA	SPG	228480
100658HA1	SPG	228480
10065LPD	JN-MN	**415303**!
10065LUP	JN-MN	**415303**!
10066	C-R	**450593**!
10066	C-R	**450593**
100664SS	SPG	9599S
100667	CLARK	**473473**
10067	C-R	**450593**!
10067	C-R	**450593**
10067	SPG	**473228**!
100675VA8	SPG	100675
100675VA8	SPG	719316
1006864	ALLCH	**415196**=
100696VJ8	SPG	100696
1007+2007	STEM	**416865**
1007+2096	STEM	**416865**
1007+320-2007	STEM	**416865**
10070	SPG	**472185**!
100700	CLARK	**472015**!
10070R	IH	**412119**!
10070SB	SPG	**472185**!
100712VJ8	SPG	100712V
100713VA8	SPG	100713V
100715VJ8	SPG	100715V
10071S	SPG	**472439**
1007240M1	MASSE	408
100725RR8	SPG	9316
100736BXR	SPG	100736
10073LPD	JN-MN	416556!
10073LPD	JN-MN	**472157**
10073LUP	JN-MN	416556!
10073LUP	JN-MN	**472157**
10075	C-R	**471733**
10075	UNIVE	**471689**!
10077	C-R	**471733***
10078	C-R	**471733***
10079	C-R	**471733**
1007A3	WHITE	**412119**!
1007VB7	MARI	**415227**!
1008	BUSHH	**471984**
1008	SPG	**473010**!
1008	UNIVE	**415227**!
1008+2018	STEM	**417134**
1008+2105	STEM	370054A
1008+2164	STEM	370150A
1008+320-2018	STEM	**417134**
1008+320-2105	STEM	370054A
1008+320-2164	STEM	370150A
10081225	UNIVE	**417570**
10082	C-R	**471733**
10083	SPG	**472924**!
10085	SPG	**470530**!
100855301	EATON	HU009A
100855302	EATON	HU009A
100858201	EATON	370001A
100858201	EATON	380001A
100858401	EATON	370001A
100858401	EATON	380001A
100859	CUMMI	**472705**!
10085NA	SPG	**470530**
10087LPD	JN-MN	**416921**!
10087LUP	JN-MN	**416921**!
10088158	GMC	4359V

! Industrial Size/Type * Minor Width Difference $ F-M Number Is Part Of A Kit
= The U.S. customer service number is 877-4-TIMKEN. The Canadian customer service numbers are 800-565-4927 (English) and 800-565-0438 (French-Canadian).

Mfr. No.	Name	Zero Duplication or Recommended Industrial
10088158	GMC	5274
100884	C-R	455123
1008VB7	MARI	415227!
1009+2043	STEM	370015A
1009+2181	STEM	370015A
1009+320-2043	STEM	370015A
1009+320-2181	STEM	370015A
100927	HK-SY	8907
100944	CLARK	416271!
10096	C-R	471733
10096LPD	JN-MN	415551
10096LUP	JN-MN	415551
10097	CLARK	472015!
100971	GMC	6846S=
10097LPD	JN-MN	417344!
10097LUP	JN-MN	417344!
10099LPD	JN-MN	415551
10099LUP	JN-MN	415551
10099P	IH	473447
100A03604	TROS	472705!
100B02806	TROS	50199S!
100B02806	TROS	6863S!
100E1190	FORD	1070=
100E7657	FORD	2551
100F16	C-R	471442!
100FM16	C-R	471442!
100HMS16Q6	C-R	6863S!
100ML16Q6	C-R	471442!
100W2	REO	HU024A
100X115X9	SIMRT	100X115X9
100X120X10AN	ISP	100X120X10
100X120X10AN(35)	ISP	100X120X10
100X120X12SC	TRSCM	100X120X12
100X120X12TC	TRSCM	100X120X12
100X125X12SC	TRSCM	100X125X12
100X125X12TC	TRSCM	100X125X12
100X130X12SC	TRSCM	100X130X12!
100X130X12TC	TRSCM	100X130X12!
100X140X13	SIMRT	100X140X13
100Z16	C-R	471442!
101	UNIVE	471735
1010	DEXTR	413470!
1010+2031	STEM	370013A
1010+2046	STEM	370013A
1010+320-2031	STEM	370013A
1010+320-2046	STEM	370013A
10100	C-R	471733
10100LPD	JN-MN	417433
10100LUP	JN-MN	417433!
10101	SPG	412119!
10101164	GMC	2261
10104	C-R	50462*
101044	MC-CL	450545
101045	MC-CL	470506!
10108	C-R	240462*
101082	COOK	456618
101083	WHELA	416891!
10108477	GMC	4359V
101097	ALFAR	713008
1011	SPG	471192
1011004M1	MASSE	471224!
1011035	WOOL	415960!
1011056	DURA	473236!
1011057	DURA	473197
10110LPD	JN-MN	415559*
10110LUP	JN-MN	415559
101116A	OLIVE	340413
10111769	GMC	9845
10111LPD	JN-MN	471862*
10111LUP	JN-MN	471862
10112	C-R	240462
10112635	GMC	5778V
10112663	GMC	7457N*
10114	C-R	471744!
101147	CLARK	473228
10115	C-R	471744!
10115	SPG	473467!
101151	CLARK	473367!
10115744	GMC	4307V!
10116	C-R	471744!*
101162	UNIVE	481650
10117	C-R	471744!*
10117728	GMC	3543
10117848	GMC	9613S
101180	CUMMI	471984
101181	CUMMI	473229
101191	GMC	416239!
1011J-1	OSHKO	415035
1011J-1	OSHKO	415035!
1012	BR-WN	472560N!
1012	UNIVE	55228=
1012+2016	STEM	417505
1012+320-2010	STEM	370033A
1012+320-2012	STEM	370023A
1012+320-2012	STEM	380023A
1012+320-2016	STEM	417505
10120	C-R	471760*
10120	SPG	471224!
10120LPD	JN-MN	412040
10120LUP	JN-MN	412040
10121	C-R	471760*
1012141M1	MASSE	204002
101216	CLARK	416921!
101216	MIXMO	416921!
10121LPD	JN-MN	415449!
10121LUP	JN-MN	415449!
10121VM	TRSCM	240731
1012219M1	MASSE	471750!
1012253-5	MC-CL	340797
101225E	MC-CL	340797
10123	C-R	471760
10124	C-R	471760
101246	MC-CL	330385
1012461	MC-CL	330385
10125	C-R	471760
10125	UNIVE	50445
101255	CLARK	415458!
10126	C-R	471760
101260	SPERY	473462
101277	TW-CO	450165
101277	TW-CO	471801!
10128	C-R	471760
10128317	GMC	324234V
101285	TW-CO	450165
101285	TW-CO	471801!
10129	C-R	471760
10129	SPG	472826!
101295C1	IH	473231!
10129LPD	JN-MN	417493
10129LUP	JN-MN	417493
1012N	SPG	45X62X8
1013	SPG	472492!
1013+2003	STEM	370036A
1013+2013	STEM	370036A
1013+2013	STEM	370349A
1013+2013	STEM	380036A
1013+2109	STEM	370036A
1013+2109	STEM	370349A
1013+2109	STEM	380036A
1013+320-2003	STEM	370036A
1013+320-2003	STEM	370349A
1013+320-2003	STEM	380036A
1013+320-2086	STEM	417507
1013+320-2109	STEM	370036A
1013+320-2109	STEM	370349A
1013+320-2109	STEM	380036A
101300	MC-CL	340787
101303	MC-CL	450545
101305	MC-CL	471267!
101306	MC-CL	340817
10131	C-R	471760
101311VL	TRSCM	342517
101314	WHITE	370007A
1013166M1	MASSE	473459
1013166M2	MASSE	473459
10132	SPG	412920!
10132LPD	JN-MN	415371
10132LUP	JN-MN	415371
10132SB	TRSCM	252277
10132SB	TRSCM	441130!
10132TBY	TRSCM	252277
10133	C-R	471760
101342	HU-WR	415036
10135	SPG	471192
101362	AM WH	415035
101362	AM WH	415035!
101366	MC-CL	473425
101367	MC-CL	472164!
101368	MC-CL	473425
10136S	SPG	470625!
1014+2014	STEM	370030A
1014+2117	STEM	370030A
1014+320-2014	STEM	370030A
1014+320-2117	STEM	370030A
10140533	GMC	223520!
10140538	GMC	4333N
10141	SPG	470954!
10141VB	TRSCM	471224
10142LPD	JN-MN	416297
10142TB	TRSCM	471224!
10142TBY	TRSCM	471224
10142TBY	TRSCM	471224!
10142VTB	TRSCM	471224!
101443	ALFAR	713005
101448	CLARK	417351!
10145	C-R	471760*
1014734	CINMI	472185!
10149	C-R	471760
101497	CLARK	471766!
1014RING+320-2014	STEM	370030A
1015	FMS	1015N
10151LPD	JN-MN	417546!
10151LUP	JN-MN	417546!
1015243M1	MASSE	203025
10152LPD	JN-MN	417556
10152LUP	JN-MN	417556
10152VB	TRSCM	471270!
10153	C-R	471760
101533	BU-SP	415379
101533	BU-SP	415379!
10153SA	TRSCM	471076
10153SA	TRSCM	471076!
10154LUP	JN-MN	456641*
10155	C-R	471760
10155TA	TRSCM	471224
10156	C-R	471760
10156051	GMC	4307V!
10157	C-R	472138*
101572TB	TRSCM	473380
10158	C-R	471619!
101584	MC-CL	340797
10159	C-R	471619!
10159	C-R	471619
101590	CLARK	415036
101590	TW-CO	415036
101595	COOK	55522=
10160	C-R	471619!
10160	C-R	471619
10161	C-R	471619
10161	C-R	471619!
10161250	UNIVE	415227!
10162	C-R	471619
10162	C-R	471619!
10162	SPG	471765!
10162078	GMC	474241V!
10162SB	TRSCM	471649!
10162TB	TRSCM	471649!
10163	C-R	471619!
10163	C-R	471619
10163SA	SPG	471766!
10163SM	TRSCM	471651
10164LPD	JN-MN	412473!
10164LUP	JN-MN	412473!
10164SSTM	TRSCM	471649
10164T2	DIA	415995!
10164T2	WHITE	415995!
10165LPD	JN-MN	415303!*
10165LUP	JN-MN	415303!
101678A	WHITE	473517!
101679A	OLIVE	417349
101679A	WHITE	417349!
10167T2	WHITE	417181!
101685	HU-WR	415379!
101685	HU-WR	415379
10168582	GMC	4359V
101687	EATON	927112
10169	ALLCH	472157!
10169	ALLCH	472157
10169	TRAC	472157!
10169	TRAC	472157
101691A	OLIVE	472258!
101691A	WHITE	472258!
1016B	GOODM	471766!
1017+2017	STEM	418028
1017+320-2017	STEM	418028
10171	C-R	222630
10171	C-R	26X38X5!
10171	GWI	415035!
10171	GWI	415035
101712A	WHITE	311189
1017293M1	MASSE	240356
10172LPD	JN-MN	470625!
10172LUP	JN-MN	470625!
10172TB	TRSCM	471689!
10172TBY	TRSCM	471689!
10172VAY	TRSCM	471689
10172VTB	TRSCM	471689!
10173	C-R	222630
10173	C-R	26X38X5!
101732	FR-HT	41013S
101736	FORD	471192
10173SA	TRSCM	471689
10173TB	TRSCM	471744!
10174VB	TRSCM	203005!
10174VB	TRSCM	205005
10174VHY	TRSCM	204005
10176T2	WHITE	240735
10177	C-R	26X37X7
101773TA	TRSCM	471689
101779	HU-WR	471692!
10178	C-R	471516
1017B	GOODM	471795
1018+2016	STEM	417506
1018+2029	STEM	370008A
1018+2104	STEM	417506
1018+320-2016	STEM	417506
1018+320-2029	STEM	370008A
1018+320-2104	STEM	417506

! Industrial Size/Type * Minor Width Difference

= The U.S. customer service number is 877-4-TIMKEN. The Canadian customer service numbers are 800-565-4927 (English) and 800-565-0438 (French-Canadian).

Mfr. No.	Name	Zero Duplication or Recommended Industrial
10180	C-R	6855N=
1018066M1	MASSE	**471529**
10181	C-R	26X40X7!
10181	C-R	710316
1018103	DURA	**471224!**
101823	CINMI	**472179**
10183	SPG	**472179**
10183LPD	JN-MN	**450593!**
10183LUP	JN-MN	**450593!**
10184LPD	JN-MN	**472029**
10184LUP	JN-MN	**472029**
101868	MC-CL	**350364**
101872TB	TRSCM	**471733**
10188	C-R	26X42X7!
10188	C-R	710399
1018B	GOODM	450165
1018B	GOODM	**471801!**
1018D	GOODM	450165
1018D	GOODM	**471801!**
10190LPD	JN-MN	476510=
10190LUP	JN-MN	476510=
10191	C-R	26X42X10!
10191640	GMC	3945
1019229M1	MASSE	**470954!**
101926	CLARK	40627S=
101928	CLARK	**473232!**
101929	CLARK	**470530!**
10193	C-R	26X42X10
10193TB	TRSCM	**471744!**
1019646	DURA	**472311!**
101SP15	MACK	5M867
101VB7	MARI	**471224!**
102	C-R	5414
102	DEXTR	**473235**
102	UNIVE	**470712!**
102-W2	REO	HU028A
10200	C-R	26X45X8
102001	HOUGH	**417967!**
102001H1	HOUGH	**417967!**
10201LPD	JN-MN	**416865!**
10201LUP	JN-MN	**416865!**
10202A	C-R	**450593!**
10202TB	TRSCM	**471760**
10202VHY	TRSCM	**471760**
10202VTB	TRSCM	**471760**
1020372	CANAD	**416865!**
10205	C-R	710053
10205	GWI	**471567!**
102053	MC-CL	**481443!**
10206	GWI	**471554!**
102062SB	TRSCM	**473420**
10206D	IH	**473447**
102078	KELSE	204035
10207LPD	JN-MN	**471870!**
10207LUP	JN-MN	**471870!**
10207P	IH	**471570!**
102087	CLARK	**415458!**
10208LUP	JN-MN	**415449!**
102092	GRAM	**474276!**
1021	FMS	1021V
1021+2021	STEM	370027A
1021+2092	STEM	370027A
1021+320-2021	STEM	370027A
1021+320-2092	STEM	370027A
10210	C-R	26X46X8
102101	GRAM	**410308!**
102119	CLARK	**415697!**
102119	CLARK	455547
102122	MICH	**417570**
10213013C	HARWA	102X130X13
102157	CLARK	455556
102168	UNIVE	**470606!**
1021688	CANAD	**473204**
1021721	CANAD	**471854!**
1021743	CANAD	J1109
102175	MICH	**471705!**
102175	UNIVE	**471705!**
102178	MC-CL	240119
10218	C-R	222650
10218	C-R	26X47X7!
102182	UNIVE	**473419**
102183	MICH	**473419**
102187	MICH	**471735**
102187	UNIVE	**471735**
102188	C-R	**415124**
10219	SPG	**471649!**
102190	C-R	455476
102198	MICH	**450342**
102198	UNIVE	**450342***
1022	SPG	**471787!**
10220	C-R	26X47X7
102200	MICH	**471762!**
102200	UNIVE	**471762!**
102206	UNIVE	**473420**
102207A	HARWA	10X22X7!
1022132	DURA	**254287**
1022132	MOTO	**254287**
1022309	WOOL	**416339**
1022309	WOOL	455031!
102265	HOUGH	**417539!**
102265H1	HOUGH	**417539!**
10227	WITTE	**415697!**
10227	WITTE	455547
10228655	GMC	9845
102292	CLARK	**470334!**
10229LPD	JN-MN	**471571***
10229LUP	JN-MN	**471571**
1023+2004	STEM	370107A
1023+2023	STEM	370065A
1023+320-2004	STEM	370107A
1023+320-2031	STEM	370065A
1023+320-2031	STEM	380065A
10230	C-R	222655
10230	C-R	26X48X7!
10230	SPG	**471689!**
10234	DANMA	204002
10234F	IH	**473462**
1023564	DURA	**473231!**
10236	SPG	**470712!**
102361	CLARK	**473464**
102365	C-R	260X300X20
1023682	CANAD	**471272!**
1023682	HK-SY	**471272!**
1023684	CANAD	**470898**
1023780	DURA	**471554!**
1023781	DURA	**473214!**
1023782	DURA	**450039**
1023783	DURA	**471231!**
1023786	DURA	**471267!**
1023787	DURA	**470712!**
1023869	CANAD	**472636!**
1023914	CANAD	**472016!**
1023914	HK-SY	**472016!**
1023915	CANAD	**472164!**
1023915	HK-SY	**472164!**
1023916	CANAD	**471138!**
10240	C-R	26X50X8
10240	FUNK	**416888**
102407A	HARWA	10X24X7
102408A	OLIVE	**416738!**
1024094	CANAD	**417254**
1024116	CANAD	**417134**
1024125	CANAD	**416380!**
1024126	CANAD	J1131
10241275	UNIVE	55228=
102430	MC-CL	**471766!**
1024301	MC-CL	**471766!**
10243247	GMC	9845
1024387	DURA	**473446**
1024388	DURA	**471105!**
10243965	GMC	9845
10243TB	TRSCM	**471516!**
10243TC	TRSCM	**471516**
102443	CEMAC	**473215!**
1024645	DURA	**471733**
1024652	DURA	**471652**
1024683	DURA	471297N=
1024861	CANAD	J1103
10249LPD	JN-MN	**417351!**
10249LUP	JN-MN	**417351!**
1025+2137	STEM	370107A
1025-4873LUP	JN-MN	**417570**
10250	C-R	26X52X8
10250LPD	JN-MN	**473234**
10250LUP	JN-MN	**473234**
102513	HOUGH	**417316!**
102513H1	HOUGH	**417316!**
1025174M1	MASSE	6936S
102520	C-R	55441=
10252LPD	JN-MN	**415219***
10252LUP	JN-MN	**415219**
10253	C-R	26X52X8
1025354M1	MASSE	5092$
10253LPD	JN-MN	**473243***
10253LUP	JN-MN	**473243**
102540	C-R	**417570***
102550	C-R	**417570**
102551	C-R	**417570**
102553	GMC	**417298**
1025611	CANAD	**415447**
102577	MC-CL	**481443!**
10258LPD	JN-MN	417780
10258LUP	JN-MN	417780
10259LPD	JN-MN	**470898**
10259LUP	JN-MN	**470898**
1026+2025	STEM	370019A
1026+2026	STEM	370019A
1026+2114	STEM	370019A
1026+2131	STEM	370019A
1026+320-2025	STEM	370019A
1026+320-2114	STEM	370019A
1026+320-2131	STEM	370019A
102602	HYST	**455471**
102607A	HARWA	10X26X7
10261	SPG	**473466**
102610	CLARK	**410308!**
102627	GMC	**473466**
10265	SPG	**473235!**
10267LPD	JN-MN	**415294!**
10267LUP	JN-MN	**415294!**
102683	AM WH	**472185!**
1026A3	WHITE	**472157**
1026X1	PEERC	**252277**
102705	CLARK	**473238**
10272LPD	JN-MN	455328*
10272LUP	JN-MN	455328
1027514	WHITE	HU009A
1027520	WHITE	HU149A
102766	US-EL	472951
102766	US-EL	**474252**
102767	US-EL	**474255**
102768	US-EL	**473214!**
102769	US-EL	**471764!**
10276A	C-R	**412871!**
102776	US-EL	472951
102776	US-EL	**474252**
10278A	C-R	**473367**
10278A	C-R	**473367!**
1028	SPG	**472299**
1028+2009	STEM	370057A
1028+2028	STEM	370007A
1028+2041	STEM	370057A
1028+320-2009	STEM	370019A
1028+320-2028	STEM	370007A
1028+320-2041	STEM	370057A
10283TB	TRSCM	**472953**
10285LPD	JN-MN	**415036***
10285LUP	JN-MN	**415036**
1028872	FMC	**476470**
10289LPD	JN-MN	**471341!**
10289LUP	JN-MN	**471341!**
1028A2	WHITE	**470530!**
10293	CASE	**473467**
102936H1	HOUGH	**470530!**
102936H1	IH	**470530!**
102940	MC-CL	**481073**
1029402	MC-CL	**481073**
10294B1	DIA	417267
102963	HOUGH	**470530!**
102976	HOUGH	**472185!**
102976H1	HOUGH	**472185!**
102979	MC-CL	**471267!**
102999	CUMMI	**473211!**
102VB7	MARI	**471760**
102X130X13	SIMRT	102X130X13
102X130X13SC	TRSCM	102X130X13
102X130X13TC	TRSCM	102X130X13
103	DEXTR	441319
103	UNIVE	**471765!**
103-C6002	EIMCO	**476838!**
103-W2	REO	HU034A
1030	SPG	**471571**
103006	COOK	**415991**
103006	COOK	455146!
103015	COOK	**415196!**
10301LPD	JN-MN	**411253!**
10301LUP	JN-MN	**411253!**
103027	COOK	**417343!**
10302LPD	JN-MN	**417361**
10302LUP	JN-MN	**417361**
103034	COOK	**415991**
103034	COOK	455146!
10303LPD	JN-MN	**416666**
10303LUP	JN-MN	**416666**
103047	FR-HT	**472572!**
10304LPD	JN-MN	**415960**
10304LUP	JN-MN	**415960**
10305LPD	JN-MN	**418028**
10305LPD	JN-MN	455137!
10305LUP	JN-MN	**418028**
10305LUP	JN-MN	455137!
10306	WITTE	**471750!**
103062	ONAN	**330385**
10306LPD	JN-MN	**417196!***
10306LUP	JN-MN	**417196!**
103079	CUMMI	**473232!**
103080	CUMMI	**473010!**
103081	CUMMI	**472409**
103082	CUMMI	**471571**
103084	MC-CL	**471267!**
10308S	SPG	**410308!**
103115	GRAM	**472179**
10311LPD	JN-MN	**455330!***
10311LUP	JN-MN	**455330!**
103136R	US-EL	340817
10316SA	SPG	**472636!**
103182	UNIVE	450044
103183	MICH	450044

! Industrial Size/Type * Minor Width Difference $ F-M Number Is Part Of A Kit
= The U.S. customer service number is 877-4-TIMKEN. The Canadian customer service numbers are 800-565-4927 (English) and 800-565-0438 (French-Canadian).

Mfr. No.	Name	Zero Duplication or Recommended Industrial
103185	CLARK	417181!
103194	C-R	55532=
10320	C-R	50209*
10320	US-EL	451583!
103200	MICH	450159
103200	UNIVE	450159
10321	C-R	50209
10321	US-EL	450400
10322	SPG	412040
103223	CLARK	417210!
10324	C-R	50209*
10324	US-EL	472636!
10325	GWI	415088
10325	GWI	415088!
103254A	OLIVE	471192
103254A	WHITE	471192
10327	C-R	50209
10329LUP	JN-MN	476272=
1033	SPG	330385!
10330	C-R	471224!*
10332LPD	JN-MN	55199=
10332LUP	JN-MN	55199=
103330R1	IH	470059
103330R1	IH	470380!
103331R91	IH	473238
10333LUP	JN-MN	416657
103341	HU-WR	415449!
10334LPD	JN-MN	416891!*
10334LUP	JN-MN	416891!
10336LPD	JN-MN	17X40X7*
10336LUP	JN-MN	471579
1033812	C-R	417022
10339	C-R	481650*
1034+2034	STEM	370012A
10342	C-R	481650*
1034398	DURA	472311!
10345	C-R	481650
1034557	DURA	254287
1034557	MOTO	254287
10345LPD	JN-MN	410496!
10345LUP	JN-MN	410496!
10346	C-R	471651
103465	CLARK	417171!
103474	FR-HT	417343!
10347LPD	JN-MN	455123
10347LUP	JN-MN	455123
1035055	BENDI	330385
103516A	OLIVE	473459
103516A	WHITE	473459
10352	SPG	472164!
103569	CLARK	353141!
10357	C-R	470606!
10358SA	SPG	473231!
1035972	DURA	471255!
1035972A	DURA	471255!
1035972A	MOTO	471255!
1035978	DURA	471643!
1035978A	DURA	471643!
1035978A	MOTO	471643!
1036+2011	STEM	370002A
1036+2031	STEM	370002A
1036+2032	STEM	370002A
1036+2036	STEM	370001A
1036+2046	STEM	370002A
1036+2119	STEM	370179A!
1036+2133	STEM	370132A
1036+320-2011	STEM	370002A
1036+320-2013	STEM	370036A
1036+320-2013	STEM	370349A
1036+320-2013	STEM	380036A
1036+320-2031	STEM	370002A
1036+320-2032	STEM	370002A
1036+320-2036	STEM	370001A
1036+320-2036	STEM	380001A
1036+320-2046	STEM	370002A
1036+320-2119	STEM	370179A!
1036+320-2133	STEM	370132A
103604	AIRCO	415295
10364	C-R	471705!
103641	CLARK	471264!
10364LPD	JN-MN	416664!
10364LUP	JN-MN	416664!
10365	C-R	471705!
10365	SPG	470898
103650	CLARK	472924!
10365A	NOK	5126
10368	BR-WN	410102
10368	C-R	471689
103681	CLARK	40101S
103682A	OLIVE	472492=
1036836M1	MASSE	350936
103686	CLARK	456105
1036RC	SUL	473460
1037+2033	STEM	370048A
1037+2040	STEM	370037A
1037+2118	STEM	370037A
1037+2118	STEM	370338A
1037+2137	STEM	370048A
1037+320-2033	STEM	370048A
1037+320-2033	STEM	380048A
1037+320-2040	STEM	370037A
1037+320-2040	STEM	370338A
1037+320-2137	STEM	370048A
1037+320-2137	STEM	380048A
10371LPD	JN-MN	417603!
10371LUP	JN-MN	417603!
10372	C-R	473419!
10372	C-R	473419
103730A	OLIVE	456105
103730A	WHITE	456105
103734	KELSE	471192
1037464M1	MASSE	200861
103781	CLARK	40268=
10379LPD	JN-MN	416239!*
10379LUP	JN-MN	416239!
103802	HU-WR	471765!
103805	HU-WR	415442!
103805	HU-WR	55442
10380LPD	JN-MN	472185!
10380LUP	JN-MN	472185!
10381	MWKEL	471224
10381LPD	JN-MN	455330!
10381LUP	JN-MN	455330!
10382LPD	JN-MN	415142
10382LUP	JN-MN	415142
10384	BR-WN	472015!
10384LPD	JN-MN	415036
10384LUP	JN-MN	415036
103861	CLARK	40101S
103862-1	CROWN	JV1371
10389	FULLE	450400
103894	AIRCO	470530!
1039	NATL	226020
1039	NATL	60X80X8!
103935	CLARK	415025
103939	GMC	417555!
103964	CLARK	40566S
103993	KELSE	3942
10399301	KELSE	3942
103D6	WHITE	5751
103E27	EIMCO	417344!
103VB7	MARI	471766!
104	BL-KN	55193=
104	DEXTR	442251
104	UNIVE	471766!
104-W2	REO	HU066A
1040	YARD	471570!
104037	FR-HT	471787
10403LPD	JN-MN	471231!
10404	CR-CF	417191
104046	CLARK	240319
104046X03	TROS	7929S
10404802	TROS	240816
10404LPD	JN-MN	473214
10404LUP	JN-MN	473214
10405LPD	JN-MN	474274
10405LUP	JN-MN	474274
1040600	ROCKW	4564V
104062	CLARK	450472!
10406LPD	JN-MN	471763
10406LUP	JN-MN	471763
104078	FR-HT	204017
10410	BU-SP	471570!
104125	MICH	415227!
104156	CLARK	455019!
104156	MICH	350156
104156	MICH	473096
10416	FULLE	415991
10416	FULLE	415991!
10416	MWKEL	470954
104175	UNIVE	471692!
104181R91	IH	50199S!
104181R91	IH	6863S!
104182	UNIVE	476838!
104183	MICH	476838!
104187	MICH	470712!
104187	UNIVE	470712!
10418LPD	JN-MN	472636!
10418LUP	JN-MN	472636!
104198	MICH	471747!
104198	UNIVE	471747!
104200	MICH	471763
104200	UNIVE	471763
104206	MICH	471785!
104206	UNIVE	471785!
1042535	CANAD	40097S
1042599	FMC	472924!
10426LPD	JN-MN	471354!
10426LUP	JN-MN	471354!
10427	BR-WN	416364!
1042804	FMC	240414
104288	CLARK	473016!
1043+2021	STEM	370086A
1043+320-2034	STEM	370012A
1043+320-2041	STEM	370015A
1043+320-2041	STEM	370192A
10432LPD	JN-MN	471272!
10432LUP	JN-MN	471272!
10433	BR-WN	J1138
104365	EATON	415458
104368	EATON	416654!=
104372	MC-CL	470380!
104381	KELSE	6906S
104396	GMC	471554!
1043RC	SUL	471821!
10441S	SPG	471341!
104432	HOUGH	470059
104432	HOUGH	470380!
104436	HOUGH	472179
104437	HOUGH	473238
10443LPD	JN-MN	417258
10443LUP	JN-MN	417258
10447	BR-WN	415146!
10447	BR-WN	415991
104470	CLARK	471344
1045	SPG	473238!
104511	CLARK	411376!
1045273	WHITE	370003A
104541	CLARK	411376!
10454LPD	JN-MN	417507
10454LPD	JN-MN	417507!
10454LUP	JN-MN	417507
10454LUP	JN-MN	417507!
104564	HOUGH	473215!
104564H1	HOUGH	473215!
104603	HOUGH	415449!
104603H1	HOUGH	415449!
104603H1	IH	415449!
104610	US-EL	340413
104620	HOUGH	472924!
104620H1	HOUGH	415082
104634	SPICE	415001!
10464	IH	471689!
10464R	IH	471689!
10468	MWKEL	6597S
1046816	C-R	417604
104690	C-R	455462
1047+2051	STEM	370029A
1047+320-2051	STEM	370029A
104705	HOUGH	472179
104705H	HOUGH	472179
104705H2	IH	472179
10470LPD	JN-MN	415047
10470LUP	JN-MN	415047
104711	HOUGH	473460
104711H1	HOUGH	472394
104718	HOUGH	471689!
104718H1	HOUGH	471689!
104718H1	IH	471689!
10471LPD	JN-MN	416167!
10471LUP	JN-MN	416167!
10474LPD	JN-MN	450307
10474LUP	JN-MN	450307
104758	CUMMI	471341!
1048+2048	STEM	416158
1048+2110	STEM	416158
1048+320-2048	STEM	386025A
1048+320-2048	STEM	416158
1048+320-2110	STEM	386025A
1048+320-2110	STEM	416158
10482LPD	JN-MN	415047*
10482LUP	JN-MN	415047
10485LPD	JN-MN	472258!*
10485LUP	JN-MN	472258!
104923R91	IH	450400
10494	C-R	710157
10496	CASE	240385
10496	IH	413469!
104969	AM WH	473242
10496F	IH	413469!
10496S	SPG	410496!
104996	HYST	51032S
104997	CLARK	415023
105	UNIVE	473211!
105-W2	REO	HU065A
1050-14018STLPD	JN-MN	415227!
1050-17476LDS	JN-MN	415227!
105000117600	ALFAR	223520!
10500LPD	JN-MN	474255
10500LUP	JN-MN	474255
105023	C-R	415227!
105040	C-R	415227!
105050	C-R	415227!
105051	C-R	7973S*
1050580	C-R	415227!
10506	FULLE	451143
105065	C-R	7973S
105067	C-R	7639S

! Industrial Size/Type * Minor Width Difference

= The U.S. customer service number is 877-4-TIMKEN. The Canadian customer service numbers are 800-565-4927 (English) and 800-565-0438 (French-Canadian).

Mfr. No.	Name	Zero Duplication or Recommended Industrial
105070	GMC	**417602**!
105086	KELSE	204029
105086	KELSE	204507!
10509	LEMCO	**412119**!
105093	C-R	**415227**!
105094	DENCO	**473231**!
10509LUP	JN-MN	**415076**
10513LPD	JN-MN	**410737**!
10513LUP	JN-MN	**410737**!
105142173001	ALFAR	224100
105142173001	ALFAR	40X65X10!
10515	C-R	**480210**!*
10515	C-R	9376
105182	UNIVE	450482
105198	MICH	473428*
105198	UNIVE	473428*
105199R91	IH	**474278**
1052+2050	STEM	370145A
1052+320-2050	STEM	370145A
10520	SPG	**471272**!
105200	MICH	**471764**!
105200	UNIVE	**471764**!
105206	MICH	**473427**
105206	UNIVE	**473427**
10520F	IH	**470088**
10520SA	SPG	**471272**!
10524LPD	JN-MN	470950!
10524LPD	JN-MN	6241S
10524LUP	JN-MN	470950!
10524LUP	JN-MN	6241S
10525SS	JN-MN	**471766**
10526	C-R	**480210**!
105267R91	IH	**473464**
105267R91	IH	**473464**!
10527	C-R	**480210**!
105272R91	IH	**472311**!
105279R91	IH	**450400**
10527LPD	JN-MN	**473461**!
10527LUP	JN-MN	**473461**!
105281R91	IH	340413
10528LPD	JN-MN	**417344**!
10528LUP	JN-MN	**417344**!
1053+2109	STEM	370036A
1053+2109	STEM	370349A
1053+2109	STEM	380036A
1053+320-2109	STEM	370036A
1053+320-2109	STEM	370349A
1053+320-2109	STEM	380036A
10541	SPG	**471689**!
105415	OLIVE	**417262**!
105416	OLIVE	**417262**!
105437A	OLIVE	**471413**
105440R91	IH	**472636**!
105441	HU-WR	**471689**!
105441R91	IH	7107A=
105442H	IH	**473016**!
105442R91	IH	**410987**!
105442R91	IH	450686
105443R91	IH	**417316**!
105445R91	IH	**415960**
10545	C-R	**480210**!*
105466	EATON	**415458**!
105470C1	IH	200766
105470X1	IH	200766
105471C1	IH	200603
105471X1	IH	200603
105496	HU-WR	**472397**!
105497	HU-WR	**417073**
105504	PREST	**350364**
10551	C-R	**480210**!
10551SS	JN-MN	**331107N**
10552	C-R	**480210**!
105523	OLIVE	**411253**!
10553SA	SPG	**471224**!
105623	HU-WR	**471504**!
10562A	FULLE	**412871**!
105640117700	ALFAR	228480
105674H	IH	**412920**!
10567SA	SPG	**471267**!
10568	C-R	9376
105683A	OLIVE	**471529**
10569LPD	JN-MN	**474255**
10569LUP	JN-MN	**474255**
10572	C-R	340210
105725	OLIVE	**472144**!
10575F	IH	**473211**!
10577	C-R	27X37X7V
105780R91	IH	5957S
10579	C-R	27X37X7
10580	C-R	**450188**
10581	C-R	**450188**
10583	C-R	3732S
10583F	IH	**450039**
10584	C-R	712009
10584F	IH	**471795**
10592	C-R	**471651***
10597	C-R	**471651***
10598	C-R	**471651**
105987R91	IH	**473228**!
10598LPD	JN-MN	**417551**
10598LUP	JN-MN	**417551**
10599500	JA-HE	**471267**!
10599501	JA-HE	**471267**!
105X125X13SC	TRSCM	105X125X13
105X125X13TC	TRSCM	105X125X13
105X130X12SC	TRSCM	105X130X12
105X130X12TC	TRSCM	105X130X12
105X140X12SC	TRSCM	105X140X12
105X140X12TC	TRSCM	105X140X12
106	UNIVE	**471192**
10600	FI-CO	**474254**!
10602	FI-CO	**471344**
10604	C-R	**471651**
10605	C-R	**471651**
10608SS	JN-MN	**471737**=
106092	CLARK	**415263**
1061	NATL	224045
1061	NATL	40X62X12!
1061002	LILIS	**410496**!
1061013	LILIS	**473227**!
106127	CLARK	**472492**!
106127	MICH	55228=
106142SB	TRSCM	**480210**!
106143	FREIG	**471267**!
10615SS	JN-MN	**471224**
10616	C-R	**471442**!
106162SB	TRSCM	**471651**
106162SB	TRSCM	481650
10616SS	JN-MN	**471692**!*
10617SS	JN-MN	40183S!
1061822SL	TRSCM	**473419**
106182SB	TRSCM	**471735**
10618SS	JN-MN	40301S
106192SB	TRSCM	**450342**
106198	MICH	**473426**
106198	UNIVE	**473426***
10619SS	JN-MN	**415449**!
1062+2057	STEM	370047A
1062+320-2057	STEM	370047A
106200	MICH	**471765**!
106200	UNIVE	**471765**!
106201	CLARK	**415371**
106202SB	TRSCM	**471762**!
106206	MICH	**471354**!
106206	UNIVE	**471354**!
106212	MICH	**473205**
106212	UNIVE	**473205**
106216R91	IH	**472311**!
106218R91	IH	**474278**
106219R91	IH	**474276**!
10622	CHAMP	**415458**!
106220R91	IH	**450400**
106225	MICH	**474255**
106225	UNIVE	**474255**
106225R91	IH	**472560N**!
10623G	OSHKO	416556!
10623G	OSHKO	**472157**
10623SS	JN-MN	40316S
106241	HU-WR	**417351**!
10625	C-R	222742
10625	C-R	27X42X10*
10625	C-R	27X42X7!
10627	C-R	222742
106272	CUMMI	**473228**!
106273	CUMMI	**451857**
106274	CUMMI	**474281**!
106275	CUMMI	**473367**!
106276	CUMMI	**472164**!
106277	CUMMI	**472185**!
106278	CUMMI	**470530**!
106296	CLARK	**470898**
1063+2031	STEM	370002A
1063+2057	STEM	**415958**
1063+320-2031	STEM	370002A
1063+320-2057	STEM	**415437**
10630	C-R	27X42X10
10631	C-R	**470606**!
10632	C-R	**470606**!
10633	C-R	27X47X8*
106339	CUMMI	**473016**!
10634	C-R	1990
10634	C-R	222743
10635LDS	JN-MN	**416664**!
10636	C-R	**470606**!
1064+2072	STEM	370046A
1064+2136	STEM	**417172**
1064+320-2072	STEM	370046A
10640	C-R	1990
10640	C-R	27X43X8!
10642	C-R	**471705**!
1064730	CHRYS	**470354**
1064856	CHRYS	5797
1064857	CHRYS	5797
1065	SPG	**470898**
1065079	GMC	225230
1065079	GMC	52X72X8!
10652	C-R	**471705**!*
10653	C-R	**471705**!
10654S	SPG	**473179**
10658	C-R	**471705**!
10659	C-R	**471705**!
1065K	MINNM	**476838**!
1066+2061	STEM	370195A
1066+320-2061	STEM	370195A
10660S	SPG	**471442**!
10663	C-R	222745
10665	C-R	222745
10665	C-R	27X45X8!
10666	C-R	222745
106661	HU-WR	**416297**
106691	HOUGH	**471192**
106691H1	HOUGH	**471192**
106691H1	IH	**471192**
106692	GR-DV	**455079**!
1067	F-R-H	470059
1067	F-R-H	**470380**!
1067+2060	STEM	370069A
1067+2097	STEM	370069A
1067+320-2060	STEM	370069A
1067+320-2060	STEM	380069A
1067+320-2097	STEM	370069A
1067+320-2097	STEM	380069A
10670	CASE	**412119**!
106706	CLARK	**470565**!
10672	CASE	**327303**!
106720	HOUGH	**470954**!
106726	FUNK	**415138**!
106737R91	IH	**474278**
106738R91	IH	**323138**!
106739R91	IH	**474276**!
1068	SPG	2551
10680	C-R	**471705**!
10680401	KELSE	4122
10680401	KELSE	470547
106806	HU-WR	**417198**
10681	C-R	**473419**!
10682	C-R	**473419**
10682LPD	JN-MN	**471765**!
10682LUP	JN-MN	**471765**!
10684S	NATL	**471827**
10685	C-R	27X47X10
106852	EATON	**472409**!
10687	FI-CO	**471765**!
10689	C-R	27X47X10
106919	CLARK	**415991**
106919	CLARK	455146!
10692	C-R	**473419**
10692	C-R	**473419**!
106949R91	IH	**417316**!
106955	HOUGH	**471766**!
106955H1	HOUGH	**471766**!
106973	CLARK	6886S
10698	JN-MN	55103S
10698LPD	JN-MN	55103S
10699	C-R	**471735**
106W212	CONE	5168
107	C-R	5419
107	C-R	BS5048
107	DEXTR	415137!
107	DEXTR	**418028**
107	UNIVE	**473226**
107-W2	REO	HU036A
10700	C-R	**471735**
10700LPD	JN-MN	**455123***
10700LUP	JN-MN	**455123**
10701LPD	JN-MN	**416738**!
10701LPD	JN-MN	450096
10701LUP	JN-MN	**416738**!
10701LUP	JN-MN	450096
10707	CHAMP	**412871**!
10708	CHAMP	**470898**
107084	KELSE	JV1166
10708S	SPG	**410708**
107097	CLARK	**450472**!
107099H	IH	**472572**!
1070T-2	WHITE	**471224**!
107105H1	IH	**471554**!
107105S	HOUGH	**471554**!
107162A	OLIVE	**471138**!
107162A	WHITE	**471138**!
1071824	C-R	**415128**
10719	BR-WN	J1112
107198	CLARK	**471316**
107198	UNIVE	**450048***
107200	MICH	**450173**
107200	UNIVE	**450173**
107202	CLARK	**417556**
107216	CUMMI	470059

! Industrial Size/Type * Minor Width Difference

= The U.S. customer service number is 877-4-TIMKEN. The Canadian customer service numbers are 800-565-4927 (English) and 800-565-0438 (French-Canadian).

Mfr. No.	Name	Zero Duplication or Recommended Industrial
107216	CUMMI	**470380**!
107220	CLARK	**415327**
107224	US-EL	**471647**
10724	US-EL	**471647**
107249	CLARK	**418028**
10726	C-R	27X48X8
1072YX	IH	**450143**
10733	C-R	**450342***
107358	CLARK	370166A*
107359C1	IH	5723
10736	C-R	**450342**
10737	C-R	**450342**
10737ST	JN-MN	**416891**!
107386	HU-WR	**415995**!
107391	CLARK	**416125**!
1074	SPG	**472164**!
1074+2073	STEM	370191A
10740	C-R	**471762***
10740	C-R	**471762**
10743	C-R	**471762**
10743	C-R	**471762**!
107494	KELSE	**473463**
10749LPD	JN-MN	**471649**!
10749LUP	JN-MN	**471649**!
1074LPD	JN-MN	**450307***
1074LUP	JN-MN	**450307**
1075-16530LDS	JN-MN	**416383**
10751LPD	JN-MN	**471224**!
10751LUP	JN-MN	**471224**!
10753LPD	JN-MN	**470774**!
10753LUP	JN-MN	**470774**!
107551	C-R	55228=
107552A	OLIVE	**472492**!
107552A	WHITE	**472492**!
10755K	CASE	**471413**
10755LPD	JN-MN	**472492**!
10755LUP	JN-MN	**472492**!
10756	C-R	**471762**
10756	C-R	**471762**!
10756LPD	JN-MN	**473467**
10756LUP	JN-MN	**473467**
10757	CHAMP	**471466**!
10757LPD	JN-MN	**472397**!
10757LUP	JN-MN	**472397**!
10758	C-R	27X52X8
107591	C-R	**416383**
10761LPD	JN-MN	**417316**!
10761LUP	JN-MN	**417316**!
107621A	OLIVE	**417344**!
107621A	WHITE	**417344**!
10763	EATON	**473464**!
10763	EATON	**473464**
10765	C-R	**473420**
10766	C-R	**473420***
1077+320-2096	STEM	**416865**
107720	CLARK	**415035**!
107720	CLARK	**415035**
107732R1	IH	**474276**!
107732R91	IH	**474276**!
10773LPD	JN-MN	55309=
10773LUP	JN-MN	55309=
107744A	WHITE	**415960**
107745A	WHITE	**472572**!
107754A	OLIVE	450165
107754A	OLIVE	**471801**!
107765A	WHITE	**473237**=
107766A	WHITE	41206S=
1078	ALLCH	**417349**
1078	NATL	224040
1078	NATL	40X60X10!
1078	TRAC	**417349**
10784	EATON	100495
10784	EATON	**417349**
10784	FULLE	100495
10784	FULLE	**417349**
107885	HOUGH	**417316**!
1079+2008	STEM	370005A
1079+2009	STEM	370173A
1079+2021	STEM	370003A
1079+2024	STEM	370006A
1079+320-2008	STEM	370005A
1079+320-2021	STEM	370003A
1079+320-2021	STEM	380003A
1079+320-2024	STEM	370006A
107904	CLARK	**415035**
107904	CLARK	**415035**!
10795	SPG	**471829**
107972	CLARK	**415379**
107972	CLARK	**415379**!
107974	AM WH	**471472**!
10797LPD	JN-MN	**470605**!*
10797LUP	JN-MN	**470605**!
108	UNIVE	**473228**
108-W2	REO	HU110A
1080	C-R	**417602**!*
1080	GR-DV	**417602**!
10803006	TROS	**470004**!
10803204	TROS	**471526**!
10803205	TROS	**471526**!
10803404	TROS	481534
10803406	TROS	**471530**
108035	CLARK	**415995**!
10803606	TROS	**471281**!
10803806	TROS	**471532**
10804004	TROS	**471466**!
10804005	TROS	**471466**!
10804006	TROS	**471466**!
10804205	TROS	**481528**
10804406	TROS	**471529**
10804803	TROS	1049
108054	IH	**471413**
108054R91	IH	**471413**
10805602	TROS	240733
108092R91	IH	**450084**!
10811	SEALR	**470590**
10812	SEALR	**451583**!
10814	SEALR	**471649**!
108144	AM WH	**471649**!
10814S	SPG	**471344**
10815P	IH	470086
10816	C-R	**417604***
10816	GR-DV	**417604**
10816	SEALR	**471733**
10817	SEALR	**476838**!
10818	SEALR	**470712**!
108198	MICH	**471750**!
108198	UNIVE	**471750**!
10820	C-R	**417567**
10820	GR-DV	**417567**
10820	SEALR	**471763**
108200	MICH	**471766**!
108200	UNIVE	**471766**!
108206	MICH	**471787**!
108206	UNIVE	**471787**!
108210	UNIVE	450177*
108211	MICH	450177
108212	MICH	**471795**
108212	UNIVE	**471795**
108225	MICH	450165
108225	MICH	**471801**!
108225	UNIVE	450165
108225	UNIVE	**471801**!
10824	C-R	**415128***
108244	MICH	**471818**
10826	SEALR	**471766**!
10827	SEALR	**473211**!
108294	EATON	**473235**!
108294H	IH	**473235**!
1082B	MASSE	**410987**=
10830	TMTR	**471192**
108309	CLARK	**416149**
10831	SEALR	**480630**!
108313	CLARK	**415263**
108339	CLARK	**416149**
10833SS	JN-MN	**471413**
10834	SEALR	470059
10834	SEALR	**470380**!
10837	CLARK	**470565**!
108373	CLARK	6886S
108374	CLARK	**470565**!
1084	C-R	**455123**
1084	SEALR	**471554**!
10840	SEALR	**472572**!
10841	SEALR	**472397**!
10841LPD	JN-MN	455375=
10841LUP	JN-MN	455375=
108463	HU-WR	6590S
10846SS	JN-MN	**415379**
10847	SEALR	**417316**!
1085+2021	STEM	370034A
1085+320-2021	STEM	370034A
1085272M1	MASSE	**470954**!
10854ST	JN-MN	**416476**!
10855LPD	JN-MN	**472354**!
10855LUP	JN-MN	**472354**!
1085688M1	MASSE	**472185**!
108574H1	HOUGH	**471442**!
10859LPD	JN-MN	**416339**
10859LPD	JN-MN	455031!
10859LUP	JN-MN	**416339**
10859LUP	JN-MN	455031!
1086058M1	MASSE	**470625**!
10860LPD	JN-MN	**472012**
10860LUP	JN-MN	**472012**
108653	CLARK	**415351**!
1086758M1	MASSE	**471649**!
108679	CLARK	**416039**
108696	SIMPL	342805
10869LPD	JN-MN	**417480**!
10869LUP	JN-MN	**417480**!
108705	CLARK	**415072**
108735C1	IH	**472164**!
10875104	NAPCO	**412871**!
108773	AM WH	**417247**!
10877SS	JN-MN	**474278**!
1088	ALLCH	**473461**!
1088	B-L-H	**415124**
1088	C-R	**415124**
1088	TRAC	**473461**!
1088+2095	STEM	**415058**
1088+2132	STEM	**415058**
1088+320-2095	STEM	**415058**
1088+320-2132	STEM	**415058**
108806H1	HOUGH	**476470**
108811C1	IH	5723
1088312M1	MASSE	7700S!
1088602	CHRYS	**470354**
10887434	CHRYS	**470898**
1089+2099	STEM	370120A
10891	BU-SP	**470625**!
10892	BU-SP	**456105**
10893	BU-SP	**471267**!
10898	EATON	**473238**
108A03604	TROS	**471281**!
109	UNIVE	**470682**
109-W2	REO	HU009A
109000	HYST	**474276**!
109027	CANAD	8907
10904LPD	JN-MN	**471553**!
10904LUP	JN-MN	**471553**!
1090672	CHRYS	**415960**
109070	CLARK	**416921**!
109099	FORD	6336S
109099	OLIVE	6336S
1091+2102	STEM	370023A
1091+2102	STEM	**417505**
1091+320-2102	STEM	370023A
1091+320-2102	STEM	380023A
1091+320-2102	STEM	**417505**
10910LPD	JN-MN	**415483**!
10910LUP	JN-MN	**415483**!
109110R91	IH	**471413**
109119R91	IH	**471413**!
10911LPD	JN-MN	**413470**!
109198	MICH	470050
109198	UNIVE	470050*
109200	MICH	**473424**!
109200	UNIVE	**473424**!
109206	MICH	450124=
109206	UNIVE	450124=
1092097M1	MASSE	**472439**
10921	C-R	712008
10921767	GMC	**417343**!
10922	C-R	28X42X8!
10922	C-R	712008
10922155	WHITE	**472157**
109224	HYST	**471744**!
10923	C-R	710325
10924	C-R	28X38X7!
10925	C-R	**450040**
10926	C-R	450044
10927	C-R	710119
10929	C-R	28X40X7V
1093+2002	STEM	**416892**
1093+2005	STEM	370021A
1093+2043	STEM	370124A
1093+2058	STEM	**416888**
1093+2113	STEM	370021A
1093+2129	STEM	**416892**
1093+2165	STEM	370131A
1093+2181	STEM	370124A
1093+2184	STEM	370131A
1093+2199	STEM	370131A
1093+320-2002	STEM	**416892**
1093+320-2005	STEM	370021A
1093+320-2043	STEM	370124A
1093+320-2058	STEM	**416888**
1093+320-2113	STEM	370021A
1093+320-2129	STEM	**416892**
1093+320-2165	STEM	370131A
1093+320-2165	STEM	380131A
1093+320-2181	STEM	370124A
1093+320-2184	STEM	370131A
1093+320-2184	STEM	380131A
1093+320-2199	STEM	370131A
1093+320-2199	STEM	380131A
10930	C-R	222820
10930	C-R	28X40X7!
1093006M1	MASSE	**415072**
10931	C-R	712008
109314	HOUGH	**415001**!
109314H1	HOUGH	**415001**!
109315	HOUGH	**416654**
10932	C-R	222820
109322	HOUGH	**415138**!
109322H1	HOUGH	**415138**!
109322H1	IH	**415138**!
10933	FITZ	5095

! Industrial Size/Type * Minor Width Difference
= The U.S. customer service number is 877-4-TIMKEN. The Canadian customer service numbers are 800-565-4927 (English) and 800-565-0438 (French-Canadian).

Mfr. No.	Name	Zero Duplication or Recommended Industrial
10934	C-R	712008
109341	CUMMI	324112
10935	C-R	28X42X8!
109352	GOODM	**417481**
109352	JEFF	**417481**
109353	GOODM	**413478**
109356	US-EL	**473010!**
10936	C-R	710216
10937	C-R	222835
10937	C-R	28X44X6!
10938	C-R	222835
10939	C-R	222820
1094+2106	STEM	370003A
1094+2115	STEM	370005A
1094+320-2106	STEM	370003A
1094+320-2106	STEM	380003A
1094+320-2115	STEM	370005A
10942	C-R	27X42X10!
10942	C-R	712008*
109427	HU-WR	55501=
109428	HU-WR	55193=
10943	C-R	28X45X8
10944	C-R	222830
10945	BU-SP	**412119!**
10945	C-R	28X45X8
109451X	GRAM	450398
109451X	GRAM	**471267!**
10946	C-R	28X45X7V
109468601	GMC	**473241=**
10947	C-R	222820
10948LPD	JN-MN	**417493***
10948LUP	JN-MN	**417493**
10949LPD	JN-MN	**473462**
10949LUP	JN-MN	**473462**
10950LPD	JN-MN	**415187**
10950LUP	JN-MN	**415187**
10952LPD	JN-MN	**471689!**
10952LUP	JN-MN	**471689!**
10957	C-R	222860
10958	C-R	222860
10958	C-R	28X47X7!
109580	FORD	**417343!**
10959	C-R	28X47X7
109595	CANAD	**471138!**
10959LPD	JN-MN	**415254**
10959LUP	JN-MN	**415254**
10960	C-R	450159*
10960LPD	JN-MN	455015*
10960LUP	JN-MN	455015
10961	C-R	28X47X7
109610	C-R	**417605**
10963	BU-SP	415137!
10963	BU-SP	**418028**
10963LPD	JN-MN	**417491***
10963LUP	JN-MN	**417491**
10964	BU-SP	**472636!**
10965	C-R	28X48X8
109659	CLARK	450073
10966	C-R	28X48X8!*
10969	BU-SP	**415196!**
109690	C-R	**415090**
1097	FMS	1097N
10970	C-R	450159
10972	CASE	**473467!**
10973	C-R	28X52X7
10974	C-R	28X52X7V
10975	C-R	28X52X7
10977	C-R	28X52X7V
1098	SPG	**471224!**
10982LPD	JN-MN	**411253!**
10982LUP	JN-MN	**411253!**
10983	C-R	710433
109831	US-EL	**416339**
1099296	GMC	5068
109935R91	IH	**473473**
109936R91	IH	**412871!**
1099399	GMC	5068
109939R91	IH	**471570!**
109968	CLARK	**415263=**
109969	CLARK	**472492=**
10A10111	MINNM	6703S
10A10517	MINNM	**471442!**
10A10894	MINNM	**450474**
10A10L	AAMCO	**471193**
10A11608	MINNM	**472234**
10A11658	MINNM	**417350!**
10A12051	MINNM	**472492=**
10A12051	WHITE	**472492=**
10A1297	FED	**474276!**
10A14257	MINNM	**417344!**
10A14257	WHITE	**417344=**
10A14262	MINNM	**417349**
10A1442	FED	**450400**
10A14894	MINNM	**415379**
10A14894	MINNM	**415379!**
10A15506	MINNM	**417350!**
10A15507	MINNM	**415995!**
10A15791	MINNM	55309=
10A16	AAMCO	**473179**
10A16329	MINNM	**470954!**
10A16329	WHITE	**470954!**
10A16450	MINNM	**471870!**
10A16J	AAMCO	7018N=
10A17321	MINNM	**415995!**
10A17321	WHITE	**415995!**
10A17322	MINNM	**417350!**
10A17357	MINNM	**415991**
10A17357	MINNM	455146!
10A17817	MINNM	**415379**
10A17817	WHITE	**415379**
10A18170	MINNM	**416380!**
10A18170	WHITE	**416380!**
10A18176	MINNM	**476470!**
10A18176	MINNM	**476470**
10A18176	WHITE	**476470**
10A18678	MINNM	**473228**
10A18811	MINNM	**471835!**
10A18897	MINNM	**471466!**
10A18897	WHITE	**471466!**
10A19446	MINNM	50462
10A19446	WHITE	50462
10A19477	MINNM	**470954**
10A19477	WHITE	**470954**
10A19482	MINNM	471507N=
10A19720	MINNM	**416664!**
10A19720	WHITE	**416664!**
10A20107	MINNM	**416404!**
10A20107	WHITE	**416404!**
10A20316	MINNM	**472258**
10A20794	MINNM	486332N=
10A20794	WHITE	486332N*=
10A20796	MINNM	**416332!**
10A20796	WHITE	**416332!**
10A20859	MINNM	**473231!**
10A20859	WHITE	**473231!**
10A20R	AAMCO	7442H
10A2111	MINNM	**473237!**
10A2112	MINNM	**417158!**
10A2112	WHITE	**417158!**
10A2113	MINNM	**416921!**
10A2113	WHITE	**416921=**
10A21423	MINNM	**415991!**
10A21423	MINNM	**415991**
10A21423	WHITE	**415991!**
10A21423	WHITE	**415991**
10A21466	MINNM	**472157=**
10A21466	WHITE	**472157=**
10A21691	MINNM	**473016!**
10A21691	WHITE	**473016!**
10A22007	MINNM	476332N=
10A22007	WHITE	476332N=
10A22092	MINNM	**471272!**
10A22092	WHITE	**471272!**
10A22308	MINNM	**470954!**
10A22308	WHITE	**470954!**
10A22515	MINNM	**473225!**
10A22515	WHITE	**473225**
10A23926	MINNM	**472012**
10A23927	WHITE	**472012**
10A23R	AAMCO	342805
10A2411	MINNM	**417316!**
10A2411	WHITE	**417316!**
10A2490	MINNM	**471271!**
10A24D	AAMCO	**472164**
10A25D	AAMCO	9613S
10A26	AAMCO	**472015!**
10A26114	MINNM	**415379**
10A26114	WHITE	**415379**
10A2638	WHITE	**416921=**
10A26D	AAMCO	**470774!**
10A2730	MINNM	**415984!**
10A2731	MINNM	45827S
10A28E	AAMCO	7751H
10A29294	WHITE	**476470**
10A2G	AAMCO	**472015!**
10A30A	AAMCO	331228H
10A31033	WHITE	**415088**
10A3161	FED	**472492!**
10A3196	FED	**474278**
10A31Q	AAMCO	**470898!**
10A33A	AAMCO	**474260**
10A3417	MINNM	**473463**
10A34Q	AAMCO	**472354!**
10A36	AAMCO	9613S
10A37P	AAMCO	**471264!**
10A39F	AAMCO	**473459**
10A3G	AAMCO	9613S
10A43F	AAMCO	**473473**
10A44F	AAMCO	7929S
10A45F	AAMCO	**331107N**
10A46F	AAMCO	7692S
10A4731	MINNM	**471424!**
10A4T	AAMCO	451117N=
10A50N	AAMCO	**473445**
10A5104	MINNM	**416664!**
10A56Y	AAMCO	**473179**
10A57Y	AAMCO	8792S
10A5956	MINNM	425RR
10A6156	FED	**474278**
10A6239	FED	**323138!**
10A6268	FED	**481568!**
10A6289	AVCO	**416404!**
10A6289	MINNM	**416404!**
10A6289	WHITE	**416404=**
10A6627	MINNM	**473473**
10A6732	MINNM	**417344!**
10A6733	MINNM	**410190**
10A69B	AAMCO	**471539**
10A70	AAMCO	**473473**
10A7038	MINNM	**417344!**
10A7073	MINNM	**470954**
10A7103	MINNM	**471413!**
10A7121	MINNM	**472924!**
10A7204	FED	50075=
10A73B	AAMCO	8935S
10A74B	AAMCO	7300S
10A7541	MINNM	**473227**
10A7611	WHITE	**470954!**
10A811	MINNM	**470354**
10A8344	MINNM	**417433**
10A8468	MINNM	**450400**
10A8486	MINNM	**415991**
10A8L	AAMCO	471707N
10A9471	MINNM	**471870!**
10A9789	MINNM	**473211!**
10B1444	FED	**473367**
10B1444	FED	**473367!**
10B1754	FED	**480630!**
10CDK-01094	WHITE	**450400**
10CDKL01094	WHITE	**450400**
10P1772	MINNM	**470954!**
10P2091	MINNM	**411330!**
10P2097	MINNM	353141!
10P219	MINNM	240356
10P222	MINNM	6597S
10P2276	MINNM	420
10P228	MINNM	**472234**
10P2417	MINNM	**473461!**
10P2486	MINNM	**415458**
10P2638	MINNM	**416921=**
10P2930	WHITE	**473016!**
10P3487	MINNM	**415379**
10P3604	WHITE	450073
10P362	MINNM	**474276**
10S72	TLSMI	**455576!**
10UK01094	WHITE	**474276!**
10WA-01094	WHITE	**323138!**
10X10950	MINNM	**471818**
10X15186	MINNM	**415960**
10X19X7SC	TRSCM	10X19X7
10X19X7TC	TRSCM	10X19X7
10X22X7	FORSH	10X22X7!
10X22X7	SIMRT	10X22X7!
10X22X7SC	TRSCM	10X22X7!
10X22X7TC	TRSCM	10X22X7!
10X23028	MINNM	**415379**
10X23028	MINNM	**415379!**
10X24X7	SIMRT	10X24X7
10X24X7SC	TRSCM	10X24X7
10X24X7TC	TRSCM	10X24X7
10X25X7SC	TRSCM	10X25X7
10X25X7TC	TRSCM	10X25X7
10X26X7	FORSH	10X26X7
10X26X7	SIMRT	10X26X7
10X26X7SC	TRSCM	10X26X7
10X26X7TC	TRSCM	10X26X7
10X29504	MINNM	**416271!**
10X29720	MINNM	**415960**
10X30979	MINNM	**417205!**
10X3114	MINNM	**473205**
10X31311	MINNM	**471138!**
10X31317	MINNM	**415991**
10X31317	MINNM	455146!
10X3144	MINNM	**473205**
10X33841	MINNM	203013
10X33841	WHITE	203013
10X33923	MINNM	40301S
10X33924	MINNM	**471763**
10X34138	MINNM	**415447**
10X34138	WHITE	**415447**
10X5487	WHITE	**470954!**
10X5525	MINNM	**472164!**
10X6898	MINNM	**471413!**
10X706	MINNM	**450133**
11	BL-KN	**417492**
11-317932	FAIRB	**450084!**
11-317934	FAIRB	**471341!**
11/2F11512	MURRA	**416664!**

! Industrial Size/Type * Minor Width Difference

= The U.S. customer service number is 877-4-TIMKEN. The Canadian customer service numbers are 800-565-4927 (English) and 800-565-0438 (French-Canadian).

Mfr. No.	Name	Zero Duplication or Recommended Industrial
11/2F11564	*MURRA*	**417316**!
110	*UNIVE*	**473232**
110-010	*DISOG*	710014
110-014	*DISOG*	710023
110-016	*DISOG*	**470625**
110-019	*DISOG*	710024
110-021	*DISOG*	**471504**
110-023	*DISOG*	710025
110-026	*DISOG*	710017
110-037	*DISOG*	710027
110-039	*DISOG*	710018
110-045	*DISOG*	710010
110-047	*DISOG*	710028
110-049	*DISOG*	710011
110-054	*DISOG*	710016
110-056	*DISOG*	710029
110-058	*DISOG*	710030
110-060	*DISOG*	710015
110-067	*DISOG*	710031
110-082	*DISOG*	710032
110-D6-9	*REO*	370023A
110-W2	*REO*	HU009A
1100	*UNIVE*	**415482**
1100-7180LUP	*JN-MN*	**415482**
1100-D6-15	*REO*	370036A
1100-D6-15	*REO*	370349A
1100-D6-24	*REO*	370023A
1100007968	*BUSHH*	200881
110005	*SPG*	712110
11001300	*UNIVE*	**415482**
110021R91	*IH*	370001A
110021R91	*IH*	6638S
110027	*GRAM*	**471466**!
110028	*GRAM*	**473464**
110028	*GRAM*	**473464**!
110029	*DISOG*	710026
11003A	*HERCU*	**472354**!
110040	*C-R*	**415482**
110042	*DISOG*	710038
11004LPD	*JN-MN*	456618
11004LUP	*JN-MN*	456618
110050	*C-R*	**415482**
110051	*C-R*	**415482***
1100540	*C-R*	**415482**
1100580	*C-R*	**415482**
110063	*DISOG*	710035
110066	*DISOG*	710036
1100755	*FMC*	**411253**!
110079	*DISOG*	710037
110079	*GMC*	55692=
1100971	*C-R*	**415076**
11010	*WOODB*	**472015**!
110120	*MICH*	**417020**
110128	*GRAM*	**471264**
110130	*MICH*	**415482**
110139	*CLARK*	256656*=
110139	*DISOG*	710039
110143	*DISOG*	710040
110148	*WAUKE*	**417316**!
11014LPD	*JN-MN*	450313
11014LUP	*JN-MN*	450313
110157	*DISOG*	710041
110158	*WAUKE*	**472164**!
11015LPD	*JN-MN*	470086
11015LUP	*JN-MN*	470086
110171	*DISOG*	710034
110179H1	*HOUGH*	**471570**!
11017LUP	*JN-MN*	**415483**
11018LPD	*JN-MN*	**472397**!
11018LUP	*JN-MN*	**472397**!
1101VB7	*MARI*	**415076**
11020	*KERSH*	**253099**
110206	*MICH*	450129
110206	*MICH*	**472826**!
110206	*UNIVE*	450129
110206	*UNIVE*	**472826**!
110210	*UNIVE*	**473421***
110211	*MICH*	**473421**
110212	*MICH*	**473211**!
110212	*UNIVE*	**473211**!
110225	*MICH*	**473212**!
110225	*UNIVE*	**473212**!
110228	*MICH*	40769S
110237	*MICH*	**473213**!
110237	*UNIVE*	**473213**!
110245	*C-R*	280X320X20
1103+2001	*STEM*	370121A
1103+320-1001	*STEM*	370021A
1103+320-2001	*STEM*	370021A
110303	*CLARK*	325940*=
110337	*GRAM*	**471619**!
110337	*WILYS*	**471619**!
110350	*US-EL*	**473226**
11035LPD	*JN-MN*	**417600***
11035LUP	*JN-MN*	**417600**
11039A	*C-R*	**417191**
11039A	*C-R*	456585!
11039LPD	*JN-MN*	455734=
11039LUP	*JN-MN*	455734=
11040	*DGASK*	35094
110401	*DGASK*	35094
11040A	*C-R*	**471554**!
11040A	*C-R*	**471554**
11040LPD	*JN-MN*	**417205**!
11040LUP	*JN-MN*	**417205**!
110432	*HOUGH*	**471692**!
110432H1	*HOUGH*	**471692**!
110433	*AVCO*	**412040**
110460	*CLARK*	**470898**
110461	*CLARK*	**416149**
11047A	*C-R*	**412119**!
11048A	*C-R*	**416339**
11048A	*C-R*	455031!
11049A	*C-R*	**474265**
11050	*C-R*	340835
110516	*GMC*	**415379**!
110516	*GMC*	**415379**
11051A	*C-R*	**415027**!
11051A	*C-R*	**415027**
11053	*C-R*	340835
11053	*CLARK*	**415027**!
11053	*CLARK*	**415027**
11053A	*C-R*	**476470**
110542	*CLARK*	**412473**!
11054A	*C-R*	**415991**
11054A	*C-R*	455146!
11055	*C-R*	313842
110554	*GRAM*	**471281**!
11055LPD	*JN-MN*	**470354***
11055LUP	*JN-MN*	**470354**
110569	*GMC*	**415995**!
110569	*GMC*	**415995**!
11056A	*C-R*	**471785**!
11057A	*C-R*	**474253**
11057A	*C-R*	**474253**!
11060	*C-R*	340815*
1106044	*ALLCH*	**450593**!
11060LPD	*JN-MN*	456890
11060LUP	*JN-MN*	456890
11061	*C-R*	1037*
11061A	*C-R*	**417344**!
11061LPD	*JN-MN*	**415074***
11061LUP	*JN-MN*	**415074**
11062	*C-R*	340815
110623R91	*IH*	340400
11062A	*C-R*	**415458**!
110631	*US-EL*	**476838**!
11063A	*C-R*	**476838**!
11064	*CLARK*	415064
11064	*DGASK*	35127
110641	*DGASK*	35127
11065	*C-R*	240151
11065A	*C-R*	**415995**!
11066	*C-R*	**472560N**!
11066A	*C-R*	**474265**
11067	*C-R*	**472560N**
1106756	*ALLCH*	**472164**!
11067A	*C-R*	**473419**
11068A	*C-R*	**473367**!
11068A	*C-R*	**473367**
11069	*C-R*	**472560N**!
11070	*C-R*	**476838**
11071	*C-R*	**472560N**
11071-6G	*IH*	**476470**
11071-6G	*IH*	**476470**!
11071A	*C-R*	**471466**!
11073A	*C-R*	**415001**!
11074F	*IH*	**470088**
11074LPD	*JN-MN*	**415995**!
11074LUP	*JN-MN*	**415995**!
11074LUP	*JN-MN*	**415995**!
110752	*AVCO*	**415449**!
110752	*HERCU*	**415449**!
110752B	*HERCU*	**415449**!
1107704K3	*IH*	**470380**!
11077A	*C-R*	**471787**!
11078	*C-R*	**472560N**
11078A	*C-R*	**472015**!
11079	*C-R*	3638
110799-40	*IH*	**472705**!
1108	*UNIVE*	**415076***
1081	*C-R*	**472560N**
11081CM	*SUL*	455476
11082	*C-R*	**472560N**
11083A	*C-R*	**411253**!
1084	*C-R*	**472560N**!
11085A	*C-R*	**474281**!
11086	*C-R*	222820
1108641	*VICK*	**455858**
11086AS	*HOUGH*	**473179**!
110873	*CLARK*	6547
11087AS	*HERCU*	**473179**
11088A	*C-R*	**473464**!
11088A	*C-R*	**473464**
11088A	*HERCU*	**473179**
11089	*C-R*	**471652**
11089	*C-R*	482208!
110897	*CLARK*	**415458**!
110898	*CLARK*	**470565**!
11090	*C-R*	**471652**
11090	*C-R*	482208!
11091	*C-R*	**471652**
11091	*C-R*	482208!
110914	*CLARK*	**417545**
11091A	*C-R*	**471224**!
11092A	*C-R*	**472636**!
11094A	*C-R*	470059
11094A	*C-R*	**470380**!
1109558C1	*IH*	**415041**
11095A	*C-R*	**471821**!
11096	*STEEL*	**472164**!
11096A	*C-R*	470950!
11096A	*C-R*	6241S
110976	*GMC*	**418028**
110976	*GMC*	455137!
110978	*GMC*	415137!
110978	*GMC*	**418028**
11097R	*IH*	**471141**!
11098	*C-R*	**471652**
11098R	*IH*	**473010**!
11099	*C-R*	**471652***
11099	*DGASK*	35394
110991	*DGASK*	35394
110998	*GMC*	**455584**
110998	*GOODM*	**455584**
110998	*JEFF*	**455584**
11099A	*C-R*	**473232**
110A04504	*TROS*	331173
110A04804	*TROS*	8705S
110E-65	*HWY*	**470530**!
110E-97	*HWY*	**473228**
110E65	*FWD*	**472397**!
110X130X12SC	*TRSCM*	110X130X12
110X130X12TC	*TRSCM*	110X130X12
110X135X13ASN	*ISP*	110X135X13
110X135X13ASN(35)	*ISP*	110X135X13
110X140X12SC	*TRSCM*	110X140X12
110X140X12TC	*TRSCM*	110X140X12
110X140X13SC	*TRSCM*	110X140X13!
110X140X13TC	*TRSCM*	110X140X13!
110X145X13AN	*ISP*	110X145X13
110X145X13AN(35)	*ISP*	110X145X13
110X150X15SC	*TRSCM*	110X150X12*
110X150X15SC	*TRSCM*	110X150X15
110X150X15TC	*TRSCM*	110X150X12*
110X150X15TC	*TRSCM*	110X150X15
111	*UNIVE*	**473236**!
111-307-113	*VW*	1163=
111-405-641B	*VW*	1217
111-W2	*REO*	HU149A
11100	*DGASK*	35402
111001	*DGASK*	35402
11100LPD	*JN-MN*	470059
11100LPD	*JN-MN*	**470380**!
11100LUP	*JN-MN*	470059
11100LUP	*JN-MN*	**470380**!
111017	*CUMMI*	**413469**!
11102	*DGASK*	427RR
111021	*DGASK*	427RR
11103	*C-R*	**471652**
111035	*WOOL*	450111
1110416	*CHRYS*	**415449**!
11106LPD	*JN-MN*	**416339**
11106LPD	*JN-MN*	455031!
11106LUP	*JN-MN*	**416339**
11106LUP	*JN-MN*	455031!
11108	*C-R*	**471652**
111082	*HOUGH*	**471766**!
111082H1	*HOUGH*	**471766**!
111083	*HOUGH*	**473010**!
111083H1	*HOUGH*	**473010**!
111083H1	*IH*	**473010**!
111084	*HOUGH*	**476470**
111084	*HOUGH*	**476470**!
111084H1	*HOUGH*	**476470**!
111084H1	*HOUGH*	**476470**
111084H1	*IH*	**476470**!
111084H1	*IH*	**476470**
1110879C1	*IH*	**415035**
11109	*C-R*	**471652**
1111+2106	*STEM*	370003A
1111+2115	*STEM*	370005A
1111+2162	*STEM*	370006A
1111+320-2106	*STEM*	370003A
1111+320-2106	*STEM*	380003A
1111+320-2115	*STEM*	370005A
1111+320-2162	*STEM*	370006A
111105245	*VW*	226020

! Industrial Size/Type * Minor Width Difference

= The U.S. customer service number is 877-4-TIMKEN. The Canadian customer service numbers are 800-565-4927 (English) and 800-565-0438 (French-Canadian).

Mfr. No.	Name	Zero Duplication or Recommended Industrial
111105245	*VW*	60X80X8!
11111	*C-R*	3638
11112	*FITZ*	5073
111146	*HOUGH*	5976S
111147	*AM WH*	**471138**!
11114M1	*C-R*	**474277**
11115	*C-R*	**470004**
111161	*CLARK*	50514
111163	*AM WH*	**417344**!
11117	*C-R*	**471530***
111176	*AM WH*	**415196**!
111178	*HOUGH*	**471192**
111178H1	*HOUGH*	**471192**
111179	*HOUGH*	470059
111179	*HOUGH*	**470380**!
111179H1	*HOUGH*	470059
111179H1	*HOUGH*	**470380**!
111179H1	*IH*	470059
111179H1	*IH*	**470380**!
11118	*C-R*	**471281**!*
111180	*HOUGH*	5976S
11119	*C-R*	**471532***
111193	*AM WH*	**410694**!
11119A	*HERCU*	**455189**
11119LPD	*JN-MN*	**417356**!
11119LPD	*JN-MN*	455188
11119LUP	*JN-MN*	**417356**!
11119LUP	*JN-MN*	455188
11120	*C-R*	**471466**
11120LPD	*JN-MN*	**415043**
11120LUP	*JN-MN*	**415043**
111210	*UNIVE*	473435*
111211	*MICH*	473435
111212	*MICH*	473436
111212	*UNIVE*	473436
11121LPD	*JN-MN*	**417353**!
11121LUP	*JN-MN*	**417353**!
11122	*C-R*	**471529***
111225	*MICH*	50168
111225	*UNIVE*	50168
11123	*C-R*	**471652**!
11123	*C-R*	482208
11123	*EMRSN*	**471652**
11123	*EMRSN*	482208!
111237	*MICH*	450054
111237	*UNIVE*	450054
11124	*C-R*	**471652**
11124SS	*JN-MN*	340847
11125	*C-R*	**471652**!
11125	*C-R*	482208
11125SS	*JN-MN*	340849
11126	*C-R*	**471652**
11126A	*HERCU*	**417082**
11129	*DGASK*	35315
111291	*DGASK*	35315
1112Y	*IH*	5M289
11130	*C-R*	**471652**
111307	*GMC*	**410496**!
11131VB	*TRSCM*	340835
11133	*C-R*	**471652**
11133	*C-R*	**471652**
11134	*C-R*	**471652**
11135	*DGASK*	35292
111351	*DGASK*	35292
11136	*C-R*	1989
111368	*CLARK*	**415035**
11137	*C-R*	222835*
11137AS	*HERCU*	**473179**
11138	*C-R*	**471692**
11138	*C-R*	**471692***
111383	*HOUGH*	**471224**!
1114-1252-068	*LEYLD*	228010
11140	*C-R*	**471692**!
11140	*C-R*	**471692**
11140	*DGASK*	25598
111401	*DGASK*	25598
111404	*US-EL*	**413248**
111405641A	*VW*	224045
111405641A	*VW*	40X62X12!
11140SS	*JN-MN*	416556!
11140SS	*JN-MN*	**472157**
11141	*C-R*	**471692**!
11141SB	*TRSCM*	1037
11141VB	*TRSCM*	340815
11142VB	*TRSCM*	313842
11143	*C-R*	710285
11143LPD	*JN-MN*	**411245**!
11143LUP	*JN-MN*	**411245**!
11146	*C-R*	**471692**!
11146	*C-R*	**471692**
11147	*C-R*	**471692**
11147	*C-R*	**471692**!
111475	*CLARK*	8126S
111477	*CLARK*	**415995**!
111478	*CLARK*	**416039**
111479	*US-EL*	**450040**
111481	*CLARK*	**416332**!
111482	*CLARK*	**415379**
11148LPD	*JN-MN*	**417485**
11148LUP	*JN-MN*	**417485**
111497	*WAUKE*	**471413**
1115	*SPG*	**416664**!
11150	*C-R*	**471692**!
111501315	*VW*	1012
111501315	*VW*	1012N
11151	*DGASK*	35316
11151-2K-11	*IH*	**472258**!
111511	*DGASK*	35316
111512-K-63	*IH*	**416706**!
111512G12	*IH*	**471267**!
111514	*CLARK*	3016
111514	*CLARK*	456052
11152	*DGASK*	35316
111521	*DGASK*	35316
11152SB	*TRSCM*	**472560N**!
11152VB	*TRSCM*	**472560N**
11154	*C-R*	**471692**!
11154	*HU-WR*	**471141**!
1115480	*ALLCH*	450467
11155	*C-R*	**471692**!
11155	*C-R*	**471692**
11156	*C-R*	**471692**!
11156	*C-R*	**471692**
11156	*WAYNE*	**473467**!
11157	*C-R*	**471692**!
111576	*CUMMI*	**473016**!
11158	*C-R*	**471692**!
111592Y	*AVCO*	**415458**!
111592Y	*HERCU*	**415458**!
1115938	*CHRYS*	**450776**!
11160	*C-R*	**471692**
11160	*C-R*	**471692**!
11160	*JNSON*	**417349**
11161	*C-R*	204020
11161	*C-R*	204505!
1116194	*ALLCH*	200354
111624	*AVCO*	**413248**
111624	*HEIL*	**413248**
11162SB	*TRSCM*	482208!
11162TB	*TRSCM*	**471652**
11162VTB	*TRSCM*	**471652**
11163	*JNSON*	**471272**!
111632	*AVCO*	**471705**!
111632	*HERCU*	**471705**!
111633	*CLARK*	**416154**!
111637	*EATON*	5089
11164	*C-R*	204020
11164	*C-R*	204505*
111640	*AM WH*	**411245**!
111646	*CLARK*	**473473**
11165	*DGASK*	35410
111651	*DGASK*	35410
11166	*C-R*	204020
11166	*C-R*	204505!
11167	*C-R*	203020
11167LPD	*JN-MN*	**415001**!
11167LUP	*JN-MN*	**415001**!
11168	*C-R*	**476838**!
11168-D	*CLARK*	**415437**
11168-D	*CLARK*	**415437**!
11168-E	*CLARK*	**415437**
11168-E	*CLARK*	**415437**!
111682SB	*TRSCM*	**481213**!
11169	*C-R*	**476838**!
11170	*C-R*	**476838***
11170	*C-R*	**476838**
111707R91	*IH*	**470898**
111708	*CLARK*	7700S!
111708	*MIXMO*	6886S
111708R91	*IH*	**470898**
11171	*C-R*	**476838***
11171	*C-R*	**476838**
111710R1	*IH*	**470954**!
111711R91	*IH*	**412473**!
111712R91	*IH*	**416476**!
111719	*CLARK*	**415263**
111720	*CLARK*	**416271**!
111721	*CLARK*	**416921**!
111726	*CLARK*	**416125**!
111729	*CUSH*	**473214**!
111729	*O-M*	**473214**=
11172LPD	*JN-MN*	470059
11172LPD	*JN-MN*	**470380**!
11172LUP	*JN-MN*	470059
11172LUP	*JN-MN*	**470380**!
11172TB	*TRSCM*	**471692**!
111740	*FMS*	100518
11174SS	*JN-MN*	40410S
11174VB	*TRSCM*	204505!
111750	*CLARK*	**412473**!
111756	*CUSH*	**473197**
111756	*O-M*	**473197**=
111761	*CLARK*	**471766**!
11177	*C-R*	**476838**!
11177LPD	*JN-MN*	456618
11177LUP	*JN-MN*	456618
11178	*C-R*	**476838**!
111784VHY	*TRSCM*	203020
111784VHY	*TRSCM*	204020
111785	*CLARK*	**472409**
1117B	*GOODM*	**471192**
11180	*C-R*	323133
111801	*AM WH*	**415196**!
111802	*AM WH*	**471554**!
11182SB	*TRSCM*	**476838**
11182TB	*TRSCM*	**476838**!
11183	*C-R*	**476838**!
11183K	*CASE*	200354
11183SA	*TRSCM*	**350974**!
111843	*CLARK*	**416921**=
111872TB	*TRSCM*	**470712**!
111872VSB	*TRSCM*	**470712**!
111872VTB	*TRSCM*	**470712**!
1118B	*GOODM*	**473214**
1118D	*GOODM*	**473214**
111908R91	*IH*	**416865**!
111909R91	*IH*	**416865**!
11191	*C-R*	**476838**!*
11192	*C-R*	**476838**!
11192SB	*TRSCM*	**471747**!
11193	*C-R*	**476838**!
1119321	*ALLCH*	**415035**
111933	*GMC*	8996S=
111936	*GMC*	**415551**
111936R91	*IH*	**472409**!
111937	*US-EL*	**415498**
11193A	*C-R*	**472924**!
11193LPD	*JN-MN*	**471795**
11193LUP	*JN-MN*	**471795**
11193NB	*SPG*	**471193**
111940R91	*IH*	**472409**
11194LPD	*JN-MN*	**415142***
11194LUP	*JN-MN*	**415142**
11196	*C-R*	**476838**!
111962	*AVCO*	**417486**
111962	*HERCU*	**417486**
111962B	*HERCU*	**417486**
111965	*CLARK*	**455079**!
11197	*BU-SP*	**416888**!
11197	*C-R*	**350974**!
11197LPD	*JN-MN*	**415991**
11197LPD	*JN-MN*	455146!
11197LUP	*JN-MN*	**415991**
11197LUP	*JN-MN*	455146!
11198	*BU-SP*	**472439**
11198LPD	*JN-MN*	**416332**!
11198LUP	*JN-MN*	**416332**!
11199	*BU-SP*	**471192**
112	*UNIVE*	**472179**
11200	*C-R*	**350974**!
112018R91	*IH*	**471224**!
11202	*C-R*	**470712**!
112029	*CLARK*	456112=
112029	*KEN*	456112=
11202SB	*TRSCM*	**471763**
11202SB	*TRSCM*	**471763**
11202VHY	*TRSCM*	**471763**
112034R91	*IH*	**472439**
112035	*MINNM*	**472572**!
112035	*OLIVE*	**472572**!
11203TB	*TRSCM*	**471763**
11204	*C-R*	**470712**!
112043	*MINNM*	**471570**!
11204A	*C-R*	**416865**!
11205	*C-R*	**470712**!
112051R91	*IH*	**471766**!
112052R91	*IH*	**471766**!
112055	*CLARK*	**416070**
11205602.5	*TROS*	340850
112062VB	*TRSCM*	**471785**!
112063SB	*TRSCM*	**471785**!
11207	*C-R*	**470712**!
11208	*C-R*	**470712**!
112081	*DGASK*	35361
11209	*C-R*	**470712**!
112101	*US-EL*	**471827**
11213SB	*TRSCM*	**481792**
11214	*CHRYS*	**410496**=
112149	*CLARK*	**471866**!
11215	*C-R*	**470004**!
11215DB	*TRSCM*	**472350**!
11215M1	*C-R*	**470004**!
112161	*DGASK*	35486
11217	*C-R*	**471530**
11218	*C-R*	**471281**!
112185	*O-M*	473428
11218H	*DIA*	**473179**
11219	*C-R*	**471532**

! Industrial Size/Type * Minor Width Difference

= The U.S. customer service number is 877-4-TIMKEN. The Canadian customer service numbers are 800-565-4927 (English) and 800-565-0438 (French-Canadian).

Mfr. No.	Name	Zero Duplication or Recommended Industrial
112190	CLARK	417522
1121924	C-R	55078S
112193	HOUGH	473227!
112193H1	HOUGH	473227!
11220	C-R	471466!
112207A	HARWA	11X22X7
11220M1	C-R	471466!
11220Y18	C-R	471466!
112210	UNIVE	472287!*
112211	MICH	472287!
112212	MICH	471192
112212	UNIVE	471192
112212SL	MICH	471192
11222	C-R	471529
112225	MICH	473214!
112225	UNIVE	473214
112225SLTI	MICH	473214
11223	C-R	470712!
112237	MICH	473215!
112237	UNIVE	473215!
11224	BU-SP	415007
112243	UNIVE	470950!
112243	UNIVE	6241S
112244	MICH	470950!
112244	MICH	6241S
112250	UNIVE	471835!
112251	DGASK	35524
11225A	HERCU	240119
112265	CLARK	472492!
11226LPD	JN-MN	417538*
11226LUP	JN-MN	417538
112275	UNIVE	450463
112308	CLARK	100495
112308	CLARK	417349
11232	CHRYS	473243
1123241	CUMMI	473016!
112332	CLARK	416362
112341	OLIVE	415447
112347	OLIVE	415447
11236	FITZ	5132
112365	OLIVE	470059
112365	OLIVE	470380!
112367	OLIVE	470059
112367	OLIVE	470380!
112403	OLIVE	470764!
112403	OLIVE	50764
11240LPD	JN-MN	473464
11240LPD	JN-MN	473464!
11240LUP	JN-MN	473464
11240LUP	JN-MN	473464!
11241LPD	JN-MN	473313
11241LUP	JN-MN	473313
11242SB	TRSCM	473259!
11243	FITZ	5127
112431	DGASK	35001
112432SL	TRSCM	474254
11244	C-R	470712!
112458Y	AVCO	471763
11246	C-R	470712!
1124631	SOLAR	471466!
1124681C1	IH	417172
11247	C-R	470712!
1124E-1	CLARK	472572!
1124E-2	CLARK	473464
1125	SPG	471195!
11252	C-R	470712!*
1125266C1	IH	415035
1125267C1	IH	473238
1125268C1	IH	416888!
112547	AM WH	470625!
11255	C-R	470712!*
11256	C-R	470712
11257	C-R	470712!
11258	C-R	470712!
1125919	ALLCH	450819
112596	AM WH	476838!
112597	JEFF	455024
112600	GOODM	473229
112603	OLIVE	471554!
112607A	HARWA	11X26X7
11261	C-R	205004
112622	CLARK	471344
112630-K-27	IH	470774!
11264	C-R	203003
11265LPD	JN-MN	415074*
11269	C-R	203003
11271	C-R	203003
112717	AM WH	471466!
112724H	IH	471686
11272SS	JN-MN	340136
11274	C-R	205004
11274	GEM	6703S
112751	CLARK	472924!
112752	CLARK	417252
11275SA	SPG	476470!
112766	GOODM	471747!
1127699	CHRYS	472012
11277	C-R	203003
112775Y	AVCO	472016
112775Y	HERCU	472016
11279	C-R	6832S
1127H	GEM	6703S
112819	MINNM	471765!
112819	OLIVE	471765!
11282	C-R	203003
112820	MINNM	471765!
11284	C-R	6832S
11284	FAWIC	415047
112876R91	IH	415437!
11289	C-R	471747!
1129	NATL	30X40X7!
11292	C-R	471747!
11293	C-R	471747!
112945	C-W	450398
112945	C-W	471267!
112947	C-W	471529
11298T2	DIA	472015!
11299	C-R	471747*
11299	C-R	471747
112HMS20	C-R	471466!
112X140X13SC	TRSCM	112X140X13
112X140X13TC	TRSCM	112X140X13
112Z12	C-R	471466!
112Z20	C-R	471466!
113	UNIVE	473450
113-311-113	VW	222242
113-311-113A	VW	222242
113-8432	CATER	39894
113-8433	CATER	39893
113-W2	REO	HU009A
11302LPD	JN-MN	482253
11302LUP	JN-MN	482253
1130703C2	IH	415072
11308	C-R	471747!
11308LPD	JN-MN	417159*
11308LUP	JN-MN	417159
11309	C-R	471747!
113105245F	CEW	227040
113105245F	CEW	70X90X10!
113105245F	VW	417484!
113105245F	VW	70X90X10!
113105245J	VW	227040
1131247	ALLCH	450362
11312G	OSHKO	352541
11312T2	DIA	370019A
11314	C-R	471763
113148	MINNM	455189
113148	OLIVE	455189
11316G	OSHKO	415088
11316SS	JN-MN	451583!*
11317	BU-SP	412473!
1131714X1	IH	456199=
11318	BU-SP	417351!
11318	C-R	471763*
11319	BU-SP	415379
11319	BU-SP	415379!
11320	C-R	471763*
113243	UNIVE	50254=
113244	MICH	50254=
11327SS	JN-MN	351487
113286	OLIVE	470712!
11333	C-R	471763*
113339	OLIVE	470712
11334	C-R	471763
113341	OLIVE	455189
11338	C-R	471763
11339	C-R	471763
11340	C-R	471763
1134101	ALLCH	441130
11341SB	SPG	471341!
1134220	ALLCH	410102
113424	CLARK	416664!
113426	CLARK	415389
113426	KEN	415389
11343	C-R	471763*
1134395	ALLCH	472439
11344	C-R	471763
113485	AM WH	411500
113501315	VW	1012
113501315	VW	1012N
113501315H	PORSC	224462
113501315H	PORSC	44X62X8!
113517	O-M	474260
11352	C-R	472644
11353	C-R	472644
11353	JNSON	416921!
113550R91	IH	417538
113551R91	IH	417538
113554R91	IH	471270!
113558R91	IH	415449!
11356	C-R	471785
113569R91	IH	456105
11357	C-R	471785
11358	C-R	471785!
113585R91	IH	415449!
11359	C-R	471785!
11365	C-R	471785!
11366	BU-SP	471766!
11366	C-R	471785
11368	C-R	471785=
11368LUP	JN-MN	416156
11369	C-R	471785
1137	GRAY	471649!
11370	C-R	471785!
11370	CASE	471763
11370	CLARK	471763
11371	C-R	481792=
11372	C-R	481792
11374	C-R	481792
1137411C1	IH	470354
11375	C-R	481792
11376	C-R	481792
113763	OLIVE	471835!
11378	C-R	450604*
11379	ACF	415150!
11380	C-R	450604
1138281	CHRYS	240356
1138282	CHRYS	240151
113848	GMC	416394
113854	CLARK	JV1121=
113866	EATON	100263
113866	EATON	4562V
113875	CLARK	417283
11391	C-R	450332
11392	C-R	473259*
11392	C-R	473259
113970R91	IH	473473
113971R91	IH	471413!
1139896	CHRYS	450776!
1139897	CHRYS	471862
1139898	CHRYS	470950!
1139898	CHRYS	6241S
1139899	CHRYS	474264
1139900	CHRYS	471316
113E-4	HWY	417316!
113E36	HWY	450165
113E36	HWY	471801!
114	UNIVE	473238!
114-W2-1	REO	733067
114-W2-11	REO	730018
114-W2-2	REO	730026
114-W2-3	REO	730004
114-W2-5	REO	730001
114-W2-6	REO	730003
114-W2-7	REO	730008
114-W2-8	REO	730016
114-W2-9	REO	730149
1140	C-R	340835
11405	C-R	472954
11407	C-R	710504
114074	WHELA	471765!
11409	KINNR	473428
11410	C-R	450430*
114102Y	AVCO	473238
114109	MINNM	473229
114109	OLIVE	473229
1141223C1	IH	396412*=
11413	GWI	473228
114134Y	AVCO	450143
114135	MICH	415076*
114136Y	AVCO	471192
114136Y	HERCU	471192
11414	GWI	471820
11415	GWI	473228
114184	CLARK	416422
1141962R1	IH	5084
11420	KINNR	471281!
1142056	CHRYS	471267!
11420SS	JN-MN	417484!
114210	CLARK	415351!
11422	C-R	1989
114225	MICH	473016!
114225	UNIVE	473016!
114228	FWD	370003A
114229	FWD	370003A
114237	MICH	473225!
114237	UNIVE	473225!
11424	KINNR	471647
114243	UNIVE	474264
114244	MICH	474264
114250	UNIVE	473226
114275	UNIVE	450808
11427LPD	JN-MN	480630!
11427LUP	JN-MN	480630!
11429	C-R	320595
11429A	C-R	471504!
11429NA	SPG	472082
11430	CASE	471835!

! Industrial Size/Type * Minor Width Difference

= The U.S. customer service number is 877-4-TIMKEN. The Canadian customer service numbers are 800-565-4927 (English) and 800-565-0438 (French-Canadian).

Mfr. No.	Name	Zero Duplication or Recommended Industrial
11431	*CASE*	**471553**!
11432	*KINNR*	**473215**!
11434537	*ALLCH*	**471341**=
114378	*HERCU*	**471795**
114378Y	*AVCO*	**471795**
114392-A-107	*FWD*	HU009A
114399	*GOODM*	**471649**!
114399	*JEFF*	**471649**!
114407	*WHITE*	**472258**
114410-A-107	*FWD*	HU149A
114411-A-204	*FWD*	730149
1144500	*HYST*	40520S
11448A	*HERCU*	**455189**
1145022	*BENDI*	**481568**!
1145028	*ALLCH*	**473232**
114533	*HOUGH*	**411253**!
11453LPD	*JN-MN*	**412119**!
11453LUP	*JN-MN*	**412119**!
11459	*CHRYS*	**473010**!
114631	*SPICE*	**471821**!
114632	*SPICE*	**471763**
114636	*GMC*	**471224**!
11467	*GAL*	**471255**!
11468A	*C-R*	**473228**
11471	*ITM*	1110
11471K	*CASE*	**417343**!
11474A	*C-R*	**471766**!
11476A	*C-R*	**472409**!
114771R91	*IH*	**417484**!
114774	*HOUGH*	**415458**!
11479A	*C-R*	**416654**!
11480	*KINNR*	**471538**!
11480A	*C-R*	**410987**!
11486SB	*SPG*	**470380**!
11486SB	*SPG*	472189A!
1149	*GARLK*	**473462**
114914	*ALLCH*	417267
114941	*US-EL*	**327303**!
11497LPD	*JN-MN*	**476470**
11497LUP	*JN-MN*	**476470**
11498LPD	*JN-MN*	**482253**
11498LUP	*JN-MN*	**482253**
11499LPD	*JN-MN*	50266
11499LUP	*JN-MN*	50266
114X140X13SC	*TRSCM*	114X140X13
114X140X13TC	*TRSCM*	114X140X13
115	*UNIVE*	**472394**
115-4120	*CATER*	39881
115-4120	*CATER*	5722
115-4120	*CATER*	947090$
115-W2	*REO*	HU028A
1150	*GARLK*	**450472**!*
1150-10509LUP	*JN-MN*	**415076**
1150-15072STLUP	*JN-MN*	**415076**
1150-18708LPD	*JN-MN*	**415077**
1150-9019LUP	*JN-MN*	**415077***
11500LPD	*JN-MN*	**415035**
11500LUP	*JN-MN*	**415035**
115015	*C-R*	**415077**
115016	*C-R*	**415077**
115020	*C-R*	**415077**
115021	*C-R*	**415077***
115025	*C-R*	**415077**
1150250	*C-R*	**415077**
115040	*C-R*	**415076**
115041	*C-R*	**415076***
1150540	*C-R*	**415076**
1150580	*C-R*	**415076**
11507	*CHRYS*	**413470**!
11508	*BR-WN*	**471224**!
11514	*C-R*	471707*
11514LPD	*JN-MN*	**471827**!*
11514LUP	*JN-MN*	**471827**!
11515LPD	*JN-MN*	**473471***
11515LUP	*JN-MN*	**473471**
115162TB	*TRSCM*	**474260**
115172TB	*TRSCM*	471707
11517LPD	*JN-MN*	455625=
11517LUP	*JN-MN*	455625=
11518	*C-R*	**474260***
11518	*C-R*	**474260**
115182SB	*TRSCM*	**471736**
11518LPD	*JN-MN*	**473237**!
11518LUP	*JN-MN*	**473237**!
115200	*MIX*	**471766**!
115201	*MIX*	**470625**!
115202TB	*TRSCM*	**471764**!
115202TB	*TRSCM*	**471764**!
11521	*C-R*	450482
115210	*MIX*	**473459**
115211	*MIX*	**471870**!
115214	*MIX*	**472636**!
11522	*C-R*	**474260**!
11522	*C-R*	**474260**
115223	*MIX*	**416654**!
115224	*MIX*	**415995**!
115227	*MIX*	**415142**
115229	*MIX*	**471765**!
11522LPD	*JN-MN*	**410308**!
11522LUP	*JN-MN*	**410308**!
11523	*C-R*	**471736**
115232	*MIX*	**472397**!
115235	*MIX*	**412473**!
115237	*MICH*	**473438**
115237	*UNIVE*	**473438**
11524	*C-R*	**471736***
115240	*MIX*	**415303**!
115242	*MIX*	**472157**!
115242	*MIX*	**472157**
115243	*UNIVE*	**473439**!
115244	*MICH*	**473439**!
11525	*C-R*	473428
115251	*MIX*	**415483**!
115252	*MIX*	**416664**!
115254	*MIX*	**473460**
115256	*MIX*	**473467**
115259	*MIX*	**416273**!
11526	*C-R*	**471736**
11527	*C-R*	473428*
115270	*MIX*	**416865**!
115271	*MIX*	55392=
115272	*MIX*	**327303**!
115273	*MIX*	**417474**
115277	*MIX*	**417488**!
11528	*C-R*	473428*
115280	*MIX*	**417495**
115282	*MIX*	**416865**!
115283	*MIX*	**450326**
11529	*C-R*	**471736**
115291	*MIX*	**415991**
115291	*MIX*	455146!
115292	*MIX*	**415035**
115292	*MIX*	**415035**!
115293	*MIX*	**417349**
115294	*MIX*	**455144**
1153	*GARLK*	**473241**
11532	*C-R*	473428
115322	*MIX*	**471272**!
115328	*MIX*	**417362**!
11533	*C-R*	473428
11533	*WOODB*	**471272**!
115330	*MIX*	55078S
115332	*MIX*	**471271**!
115333	*MIX*	**473450**
115334	*MIX*	**472560N**!
11534	*C-R*	473428
11535	*C-R*	473428
11535LPD	*JN-MN*	**473460**
11535LUP	*JN-MN*	**473460**
1154	*GARLK*	**473241***
1154109	*CATER*	39881
1154109	*CATER*	5721
11544	*C-R*	**471764***
11544	*C-R*	**471764**
11545	*C-R*	**471764**
11545	*C-R*	**471764***
115456H	*IH*	**417316**!
11548	*C-R*	**471764**!
11549	*C-R*	**471764**!
11550	*C-R*	**471764**=
11551LPD	*JN-MN*	**472492**!
11551LUP	*JN-MN*	**472492**!
11552LPD	*JN-MN*	**55301S**
11552LUP	*JN-MN*	**55301S**
11553	*C-R*	**451182**
11553	*WOODB*	**471272**!
11555	*C-R*	**473427**
115551	*OLIVE*	470059
115551	*OLIVE*	**470380**!
11557	*C-R*	**473427***
11557LPD	*JN-MN*	**417354**!*
11557LUP	*JN-MN*	**417354**!
11558LPD	*JN-MN*	**455005**
11558LUP	*JN-MN*	**455005**
1156-001	*PYUNG*	7457N
1156-002	*PYUNG*	2146
1156-025	*PYUNG*	1215N
1156-054	*PYUNG*	1990
1156-185	*PYUNG*	1990
11561	*US-EL*	**472179**
11564LPD	*JN-MN*	**481163**!
11564LUP	*JN-MN*	**481163**!
1566	*C-R*	**450362**
115687H	*IH*	**470898**
11568LPD	*JN-MN*	**472287**!
11568LUP	*JN-MN*	**472287**!
11569LPD	*JN-MN*	**450621**
11569LUP	*JN-MN*	**450621**
11577LPD	*JN-MN*	**416239**!
11577LUP	*JN-MN*	**416239**!
115806H	*IH*	450165
115806H	*IH*	**471801**!
11583SS	*JN-MN*	340356
11585	*C-R*	**472475***
115885	*OLIVE*	**455121**
115887	*OLIVE*	**470764**!
115887	*OLIVE*	50764
11589	*C-R*	223014
1159	*NATL*	222510
115950	*SPERY*	204035
115950	*VICK*	205035
11598935	*CONTI*	**473237**!
11599K	*CASE*	340927
115A980AAP21	*GE*	**471554**!
115A980AB1	*GE*	**472185**!
115A980AD3	*GE*	**481073**
115A980AD9	*GE*	**471554**!
115G-20	*WHITE*	5494$
115X140X12SC	*TRSCM*	115X140X12
115X140X12TC	*TRSCM*	115X140X12
115X145X13AN	*ISP*	115X145X13
115X145X13AN(35)	*ISP*	115X145X13
115X150X12SC	*TRSCM*	115X150X12
115X150X12TC	*TRSCM*	115X150X12
11600	*C-R*	1129
11600	*C-R*	223005
11600	*C-R*	30X40X7!
116002173010	*ALFAR*	224220
116002173010	*ALFAR*	42X56X7!
116002173010	*ALFAR*	494117
11601	*C-R*	30X40X7V
11601724	*CHRYS*	**471564**
11602	*C-R*	30X40X7!
11603	*C-R*	223005
1160303	*FUNK*	**470954**!
11603204	*TROS*	**471472**!
116038	*US-EL*	**417350**!
11603805	*TROS*	**473405**
11604	*C-R*	1129
11604	*C-R*	223005
11604	*C-R*	30X40X7!
11604004	*TROS*	**471264**!
11604204	*TROS*	**481537**
11604404	*TROS*	**471538**!
11604606	*TROS*	**470506**!
11604803	*TROS*	**470954**!
11604804	*TROS*	**470954**!
11604805	*TROS*	**470954**!
116049	*CLARK*	**416229**
11605	*C-R*	1129
11605	*C-R*	30X40X7!
116050	*CLARK*	**471271**!
11605003	*TROS*	**470601**
11605005	*TROS*	**470601**
11605006	*TROS*	**470601**
11605203	*TROS*	**471539**!
11605204	*TROS*	**471539**!
11605205	*TROS*	**471539**!
11605603	*TROS*	**254287**
11605604	*TROS*	**254287**
11606	*C-R*	30X40X7V
11609	*C-R*	30X45X8V
11610	*C-R*	1970
11610	*C-R*	30X42X7!
11610002	*TROS*	240731
11611	*C-R*	223010
11612	*C-R*	223012
11614	*C-R*	223012
11614	*C-R*	30X44X7!
11615	*C-R*	223014*
11615	*C-R*	30X45X8!
11616	*C-R*	223012*
11618	*C-R*	710359
11619	*C-R*	2016
1162	*GARLK*	**450474***
11620	*C-R*	223018
11620	*C-R*	30X46X7!
11622	*C-R*	1981
116225	*UNIVE*	**470625**!
11623	*C-R*	223020
116237	*MICH*	470059
116237	*MICH*	**470380**!
116237	*UNIVE*	470059
116237	*UNIVE*	**470380**!
116237SL	*MICH*	470059
116237SL	*MICH*	**470380**!
11624	*C-R*	30X47X7
116243	*UNIVE*	**471820**
116244	*MICH*	**471820**
11625	*C-R*	223020
11625	*C-R*	30X47X7!
116250	*MICH*	**473228**
116250	*UNIVE*	**473228**
116256	*UNIVE*	**410190**
1162565	*ALLCH*	**473010**!
11626	*C-R*	223020
116265	*HOUGH*	**472636**!
116265H1	*HOUGH*	**472636**!

! Industrial Size/Type * Minor Width Difference $ F-M Number Is Part Of A Kit
= The U.S. customer service number is 877-4-TIMKEN. The Canadian customer service numbers are 800-565-4927 (English) and 800-565-0438 (French-Canadian).

Mfr. No.	Name	Zero Duplication or Recommended Industrial
116265H1	*IH*	**472636**!
1162682	*ALLCH*	**472572**!
1162682	*FUNK*	**472572**!
11627	*C-R*	30X47X7V
1162717	*ALLCH*	**416154**!
1162717	*FUNK*	**416154**!
116275	*MICH*	**473440**!
116275	*UNIVE*	**473440**!
116276	*MICH*	**474281**!
11627A	*C-R*	**471466**
116299	*UNIVE*	**450326**
1163	*AT-PL*	**471787**!
11630	*C-R*	30X48X8!
11631	*C-R*	30X50X7
116311	*CLARK*	**471341**!
116313ISL	*MICH*	210914
11631K	*CASE*	340210
11632	*C-R*	223020
11632	*C-R*	30X47X7!*
116324R91	*IH*	**470898**
11633	*C-R*	30X48X8!
11634	*C-R*	30X50X7*
11635	*C-R*	30X50X7
116352R91	*IH*	**471553**!
116353R91	*IH*	**417344**!
116359	*HOUGH*	5976S
116359H1	*IH*	**254287**
11635LPD	*JN-MN*	**417356**!
11635LPD	*JN-MN*	455188
11635LUP	*JN-MN*	**417356**!
11635LUP	*JN-MN*	455188
11636	*C-R*	223050
11638	*C-R*	30X52X7
11639	*C-R*	223035*
1164	*AT-PL*	**472164**!
11640	*C-R*	223035
11640	*C-R*	30X52X7!
11641	*C-R*	30X52X10V
11641073	*CONTI*	J1120=
11643LPD	*JN-MN*	417516
11643LUP	*JN-MN*	417516
11645446	*CHRYS*	**473197**=
11645447	*CHRYS*	**481397**=
116456H	*IH*	**417316**!
11650	*C-R*	7442H
11652	*C-R*	30X55X10*
11652	*C-R*	30X55X7!
11653	*C-R*	30X55X10V*
11654	*C-R*	30X56X8
11654LPD	*JN-MN*	**481163**!
11654LUP	*JN-MN*	**481163**!
11655	*C-R*	3907
116557	*AM WH*	**471354**!
11657	*C-R*	30X56X8
11658	*C-R*	30X55X10
11659	*C-R*	30X47X7*
116596	*HOUGH*	**471224**!
116596H	*HOUGH*	**471224**!
116596H1	*HOUGH*	**471224**!
116596H1	*IH*	**471224**!
1166	*NATL*	222510
1166	*NATL*	25X35X7!
11660	*C-R*	30X60X8
11660LPD	*JN-MN*	**412040***
11660LUP	*JN-MN*	**412040**
11662	*C-R*	223050*
11664	*C-R*	30X62X7
116646	*CLARK*	**473473**
11665	*C-R*	30X62X7
116652	*OLIVE*	**472016**
11666	*C-R*	30X62X7V
11668	*C-R*	30X62X7!
11669	*C-R*	1970
1166965	*CONTI*	**473236**!
116698	*WILYS*	340413
11669LPD	*JN-MN*	**455191***
11669LUP	*JN-MN*	**455191**
11670	*C-R*	30X65X8
11671	*C-R*	223018
11672	*C-R*	1989
11673	*C-R*	710267
116736	*AM WH*	**472394**
11675	*C-R*	30X68X8
116757	*ALLCH*	**415458**!
116757	*WAUKE*	**415458**!
116811	*HOUGH*	**412871**!
116811H1	*HOUGH*	**412871**!
11682694	*CONTI*	7399S!
116827	*BRCWY*	**470334**!
11685	*C-R*	30X72X10*
11685	*C-R*	30X72X7!
11685LPD	*JN-MN*	**417171**!
11685LUP	*JN-MN*	**417171**!
11686	*C-R*	30X72X10
116867	*WAUKE*	**471192**
1169	*NATL*	3771
11693LPD	*JN-MN*	**415867**
11693LUP	*JN-MN*	**415867**
116960	*WAUKE*	450415
11696LPD	*JN-MN*	**412943**
11696LUP	*JN-MN*	**412943**
1169970246	*MERCE*	710290
116A04806	*TROS*	**470954**
116A05603	*TROS*	7840S
116T5	*WHITE*	**471821**!
117	*FMC*	440RR
117-289-E91	*IH*	370001A
117-D6	*REO*	370349A
11700	*C-R*	483488
1170107	*GMC*	5589
11702	*C-R*	710065
11706	*NEWPR*	2465
117078	*GMC*	**415449**!
117093	*WILYS*	340787
11709LPD	*JN-MN*	**416892**!
11709LUP	*JN-MN*	**416892**!
1171	*NATL*	223542
1171	*NATL*	35X55X11!
11712	*C-R*	340817
117131H1	*IH*	**471504**
11719	*NAK*	280X320X20
11720	*C-R*	470328
11720	*C-R*	**481213**!
11721	*C-R*	470328
11721	*C-R*	**481213**!
117225H1	*HOUGH*	**415995**!
117235H1	*IH*	**471835**!
117237ISL	*MICH*	**452222**!
11728	*C-R*	470328
11729	*C-R*	40328
11730	*C-R*	470328*
11730	*C-R*	**481213**
1173052	*GMC*	5589$
11731	*HWY*	**410102**
11732	*C-R*	2551
11732	*EMRSN*	**473237**!
11733	*C-R*	9487
11734	*C-R*	**473203**
11735	*C-R*	**473203**
117362R91	*IH*	**416282**
117380	*WAUKE*	**471271**!
11739LPD	*JN-MN*	**415142***
11739LUP	*JN-MN*	**415142**
11740	*C-R*	**473425**
11744	*FULLE*	**415027**
11744	*FULLE*	**415027**!
11747	*C-R*	483054N
11747A	*C-R*	**415449**!
11748A	*C-R*	**415995**!
11748A	*C-R*	**415995**
1175144	*FMC*	**471267**!
11753	*C-R*	**472475***
11754	*C-R*	**472475***
11754A	*C-R*	**417356**!
11754A	*C-R*	455188
117565	*HOUGH*	**415995**!
117565H1	*HOUGH*	**415995**!
117567	*HOUGH*	**417316**!
117567H1	*HOUGH*	**417316**!
117568	*HOUGH*	**412119**!
117580R91	*IH*	**471413**
11758LPD	*JN-MN*	55333=
11758LUP	*JN-MN*	55333=
117598	*CLARK*	203008
1176-013	*PYUNG*	1990
1176-023	*PYUNG*	223801
1176-049	*PYUNG*	2011
1176-055	*PYUNG*	1990
11760	*BU-SP*	**417967**!
117604	*CLARK*	**473464**
11764	*C-R*	**472475**
117643	*HOUGH*	**470530**!
117643H1	*HOUGH*	**470530**!
11765	*C-R*	**471765**!
117652	*AM WH*	**415072**
11766A	*C-R*	**470334**!
11766A	*C-R*	50289
11769A	*HERCU*	**471570**!
11770	*C-R*	483488
11771	*C-R*	40576S
1177176	*FMC*	**417487**
11772	*C-R*	**473426***
117720	*WAUKE*	**470712**!
1177242	*FMC*	**411376**!
1177243	*FMC*	**471747**!
11773	*C-R*	**473426**
11776	*BU-SP*	**473467**!
11776	*C-R*	**473426***
11777	*C-R*	**473426***
11778	*C-R*	4813V
11779	*C-R*	**473426**
1178	*NATL*	224015
11780	*C-R*	**473426**
11780LPD	*JN-MN*	**417158**!
11780LUP	*JN-MN*	**417158**!
117829A	*OSHKO*	**416297**
11783A	*HERCU*	**473179**
11788	*C-R*	**471765**!
11788A	*C-R*	**470898**!
11788A	*C-R*	**470898**
11789LPD	*JN-MN*	**415349**
11789LUP	*JN-MN*	**415349**
1178H	*OSHKO*	**415960**!
1179	*C-R*	HU036A
1179	*NATL*	224045
1179	*NATL*	40X62X12!
11790LPD	*JN-MN*	**417511**
11790LUP	*JN-MN*	**417511**
117933	*CLARK*	**415303**!
11793STLPD	*JN-MN*	509516
11796	*C-R*	**471765**!
11797	*C-R*	**471765**!
1179RC	*SUL*	**471750**!
117A4	*WHITE*	**473467**!
117D6	*WHITE*	370036A
117D6	*WHITE*	370349A
118-5352	*FMC*	**481397**
1180-034	*PYUNG*	223250
1180-035	*PYUNG*	225040
11800	*C-R*	**471765**
11801	*C-R*	**471765**!
11801	*JNSON*	J1124
118023	*HOUGH*	**417344**!
11803	*C-R*	**471765**!
118049	*HOUGH*	**472409**
11804LPD	*JN-MN*	**415066***
11804LUP	*JN-MN*	**415066**
11805	*C-R*	**471765**!
118068	*CLARK*	**417344**!
118086H1	*IH*	**416654**
118095	*CLARK*	**473215**!
11809LPD	*JN-MN*	**450523**
11809LUP	*JN-MN*	**450523**
1180R	*MINNM*	6590S
118100	*C-R*	300X340X20*
118103	*HOUGH*	**471224**!
118113	*BL-KN*	**415960**!
118116	*BL-KN*	**417082**
118117	*SIMPL*	472065=
118118	*SIMPL*	**471224**!
11812	*BL-KN*	**473438**
118126	*BL-KN*	**416125**!
118138	*BL-KN*	450532
11814	*BL-KN*	**410190**
11815	*BL-KN*	**473234**
11815	*C-R*	**471765**
11815	*JNSON*	**415437**
11815	*JNSON*	**415437**!
11816	*BL-KN*	**472924**!
118162SB	*TRSCM*	**481213**!
118162VC	*TRSCM*	340817
118163	*BL-KN*	**416024**
118167	*BL-KN*	**476470**!
118167	*BL-KN*	**476470**
118168	*CLARK*	**417344**!
118169	*BL-KN*	**416294**!
11817	*BL-KN*	**415995**!
118170	*BL-KN*	J1123
118172SB	*TRSCM*	**473203**
118172TL-H	*TRSCM*	**473203**
118173	*CLARK*	**470898**
1181788	*GMC*	**472164**
118183SB	*TRSCM*	**473425**
11819	*BL-KN*	**471787**!
118192TB	*TRSCM*	**473426**
1182	*WMG*	224270
118202SB	*TRSCM*	**471765**!
118202TB	*TRSCM*	**471765**!
1182062TB	*TRSCM*	**471354**!
1182111	*GMC*	**472164**
118212SB	*TRSCM*	**473205**!
118225	*HOUGH*	450398
118225	*HOUGH*	**471267**!
11822SS	*JN-MN*	**473237**!
118237	*UNIVE*	**472299**
1182385	*GMC*	**470605**!
118242SB	*TRSCM*	**474256**!
118243	*UNIVE*	**471821**!
118244	*MICH*	**471821**!
118250	*MICH*	**473229**
118250	*UNIVE*	**473229**
118256	*UNIVE*	**450143**
118259	*GMC*	**471763**
11826	*C-R*	**471765**!
118262	*MICH*	**470682**
118262	*UNIVE*	**470682**
118275	*MICH*	**473441**
118275	*UNIVE*	**473441**

! Industrial Size/Type * Minor Width Difference $ F-M Number Is Part Of A Kit

= The U.S. customer service number is 877-4-TIMKEN. The Canadian customer service numbers are 800-565-4927 (English) and 800-565-0438 (French-Canadian).

Mfr. No.	Name	Zero Duplication or Recommended Industrial
118276	MICH	450273
118276	WILYS	470954!
118287	MICH	473442!
118287	UNIVE	473442!*
11830	BL-KN	473313
11830LUP	JN-MN	417487!
11830LUP	JN-MN	417487
11832	BL-KN	417487
11832LPD	JN-MN	416153!
11832LUP	JN-MN	416153!
11833	BL-KN	472185!
11833	NAK	14X27X7
11833LPD	JN-MN	417079
11833LUP	JN-MN	417079
11834SS	JN-MN	472560N!
11835	BL-KN	413469!
11835A	C-R	472015!
11836	C-R	471765
11837LPD	JN-MN	472492!
11837LUP	JN-MN	472492!
118393	SIMPL	470390=
1184	NATL	224520
1184	NATL	45X60X10!
11840	C-R	471765
11841	C-R	471765
118424	CLARK	J1127
11844	BL-KN	473464!
11844	BL-KN	473464
11845	BL-KN	415060
11845	BL-KN	455060
11845	C-R	40576S
11846	C-R	40576S
11847	BL-KN	474274
118481A1	CASE	370069A
118482A1	CASE	370121A
11848P	IH	412473!
118490H	IH	5951
1184RC	SUL	417486
1185	NATL	1012
1185	NATL	1012N
1185	NATL	45X62X8!
1185	WMG	1012N
1185071	FMC	471763
11851	BL-KN	472015!
1185119	FMC	450165
1185119	FMC	471801!
1185144	FMC	471267!
11852	C-R	40576S
1185295	FMC	472311!
1185296	FMC	470954!
11854	BL-KN	410308!
11854	FULLE	471413
11854	NAK	78X115X10
1185485	FMC	471737
11855	C-R	453063
118559	BRCWY	412119!
11855LDS	JN-MN	471424!
1185629	FMC	471766!
1185630	FMC	471766
1185633	FMC	471633!
1185642	FMC	471652
1185643	FMC	415984!
1185687	FMC	471744!
1185734	FMC	471808!
1185735	FMC	471730
1185769	FMC	473244!
1185777	FMC	471737
1185882	FMC	471224!
11859	BL-KN	456105
11859	C-R	471354!
1185929	FMC	472258!
1186	BL-KN	472164!
1186	COC	471870!
1186	WMG	1979
11860	C-R	471354!
1186052	FMC	471224!
11863	BL-KN	416706!
11865	BL-KN	473236!
11866	BL-KN	471762!
11867150	GMC	471554!
11868	BL-KN	415577
1187	BL-KN	411253!
1187	NATL	47X68X10!
1187003	FMC	471570!
1187004	FMC	471224!
1187006	FMC	471692!
1187009	FMC	473215!
1187010	FMC	474276!
1187011	FMC	473367!
1187011	FMC	473367
1187012	FMC	472179
1187013	FMC	474281!
1187014	FMC	473463
1187015	FMC	450343
1187016	FMC	415082
1187017	FMC	415088
1187017	FMC	415088!
1187020	FMC	474278!
11871	BL-KN	55155=
11872	JNSON	416364!
1187241	FMC	471141!
1187242	FMC	472924!
1187243	FMC	470898!
1187315	FMC	473437
11874	JNSON	J1138
1187421	FMC	474254!
1187447	FMC	205035
1187521	FMC	471354!
11875LPD	JN-MN	413246
11875LUP	JN-MN	413246
1187717	FMC	476838!
1187718	FMC	417520
1187719	FMC	471750!
1187720	FMC	473427
1187721	FMC	473467!
1187722	FMC	472492!
1187723	FMC	470380!
11878	C-R	471354!
11879	C-R	471354=
118795H1	HOUGH	410825
1187OS	JN-MN	473238!
11881	C-R	471354!
11881LPD	JN-MN	471504!
11881LUP	JN-MN	471504!
118856	US-EL	472164!
11885665	GMC	340771
118857	US-EL	471692!
118858	US-EL	471192
118864	CLARK	416592=
1189	NATL	1960
11890	C-R	710068
1189011	GMC	470774!
1189012	GMC	470774!
11892	AVCO	40568S
11892	BL-KN	473229
11893LPD	JN-MN	450339
11893LUP	JN-MN	450339
11894	C-R	473205
11894LPD	JN-MN	416664!
11894LUP	JN-MN	416664!
11895	C-R	473205
1189686	CHRYS	450808
1189686	DURA	450463
1189686	SPICE	450808
1189726	CHRYS	413469!
1189732	CHRYS	472179
1189854	GMC	340724!
11899	C-R	710068
118993H1	HOUGH	450084!
119	C-R	5585
1190	B-L-H	415090
1190	C-R	415090
1190	NATL	1955
1190	NATL	52X65X9!
1190	WMG	1955
11904	C-R	5168
11904	CHRYS	471870!
119049	OLIVE	470059
119049	OLIVE	470380!
119049	WHITE	470059
119049	WHITE	470380!
11905	C-R	473205
11906	C-R	473205
11907	C-R	473205!
1191	NATL	52X72X8!
11911	C-R	472350!
11912	C-R	415871
119132	GAL	416239!
11914	C-R	474255*
11914	C-R	474255
11916	C-R	417606
11917	C-R	474255
11918	C-R	474255
1191888	CHRYS	412119
11920	C-R	55222=
1192109	CHRYS	410825
11921P	IH	417604
1192233	CHRYS	416282
11923	C-R	474254
11923	C-R	474254*
11924	C-R	55223=
11924	CHRYS	473204
119243	UNIVE	450065
119244	MICH	450065
1192474	CHRYS	417316!
11924LPD	JN-MN	471231!
11924LUP	JN-MN	471231!
11925	C-R	474254
11925	C-R	474254*
119250	MICH	482253
119250	UNIVE	482253
11926	C-R	474254
11926	C-R	474254*
1192615	CHRYS	6597S
119262	MICH	451469
119262	UNIVE	451469
119276	MICH	450274
1192796	GMC	5591$
1192796	WILYS	5591$
11928	C-R	55224=
119288	CLARK	415076
1193	ALOY	1949
11930	C-R	474256*
11930	C-R	474256
1193133	GMC	5591$
1193151	GMC	5591$
119317	WAUKE	415442!
119317	WAUKE	55442
11932	C-R	474256*
11933	C-R	474256*
11933	C-R	474256
11934	C-R	474256*
11934	C-R	474256
11935	C-R	474256*
11935	C-R	474256
11935A	C-R	471649!
11937	US-EL	415498
1193752	CHRYS	470712!
119393	GOODM	450593!
119393	JEFF	450593!
1193965	GMC	5587
1193965	WILYS	5587
1194	ALOY	1952
1194	C-R	55218=
1194	NATL	33X50X12!
1194	WMG	33X50X12!
119427	EATON	9773
119429	EATON	416654
119430	EATON	412473
119431	EATON	415458
119432	EATON	712937
1194359	GM	420
119457	EATON	9773
119458	EATON	722250
1194581	GMC	7751H
119459	EATON	712625
1194729	HYST	471141!
1194868	HYST	451082
119487	HOUGH	416271!
119487	US-EL	471076
119488	HYST	240698
119488	US-EL	472258!
1194A	MASSE	473214
1194RC	SUL	417513
1195013	CHRYS	471689!
1195133	CHRYS	474278!
119516H1	HOUGH	455336
1195497	GMC	473442!
119573	CLARK	416657
119575	CLARK	416657
1195878	HYST	482310
1195A-15	IH	471835!
1195A-16	IH	473228
1195D1	WHITE	412027
1196	ALOY	1992
1196233	CHRYS	415697!
1196233	CHRYS	455547
11962A	C-R	471224!
119640	CROSS	471760
119641	CROSS	471763
119642	CROSS	471766!
119643	CROSS	472258!
119644	CROSS	481163!
119645	CROSS	474274
119646	CROSS	472179
119647	CROSS	472572!
119648	CROSS	472492!
119649	CROSS	472015!
119650	CROSS	471272!
119651	CROSS	416271!
119652	CROSS	415449!
119653	CROSS	415483!
119654	CROSS	416664!
119655	CROSS	417344!
1196555	GMC	7751H
119656	CROSS	417349
119657	CROSS	416288!
119658	CROSS	476470
119659	CROSS	416294!
119660	CROSS	415437
119660	CROSS	415437!
119661	CROSS	415937!
119662	CROSS	415379
119662	CROSS	415379!
119663	CROSS	417210!
119664	CROSS	417356!
119664	CROSS	455188
119665	CROSS	417511

! Industrial Size/Type * Minor Width Difference $ F-M Number Is Part Of A Kit
= The U.S. customer service number is 877-4-TIMKEN. The Canadian customer service numbers are 800-565-4927 (English) and 800-565-0438 (French-Canadian).

Mfr. No.	Name	Zero Duplication or Recommended Industrial
119666	CROSS	416891!
119668	GMC	473228!
119667	CROSS	415196!
119668	CROSS	416888!
119669	CROSS	416158
119670	CROSS	417247!
119671	CROSS	416167!
119672	CROSS	415725!
119673	CROSS	415645!
119673	CROSS	455104
119674	CROSS	417254
119675	CROSS	416666
119676	CROSS	415072
119677	CROSS	455480!
119678	CROSS	415294!
119679	CROSS	417596
119680	CLARK	415958
119680	CLARK	415958!
119680	CROSS	417597
119681	CROSS	415116
119682	CROSS	415551
119683	CROSS	455406!
119684	CROSS	417600
119685	CROSS	415124
1196856	GMC	331301N
1196857	GMC	331301N
119686	CROSS	417604
119687	CROSS	415128
119688	CROSS	415090
119689	CROSS	415219
11968SS	JN-MN	481644
119690	CROSS	417606
119691	CROSS	55223=
119692	CROSS	417020
119693	CROSS	353132
119694	CROSS	471413
119695	CROSS	471224!
119696	CROSS	473231!
119697	CROSS	474276!
119698	CROSS	471195!
119699	CROSS	450400
1197	NATL	223240
1197	NATL	32X48X8!
119700	CROSS	352541
119701	CROSS	412871!
11970SS	JN-MN	40410S
11976A	CONTI	411394!
11979	JOHND	473459
1198	ALOY	416273
1198	BU-SP	472439
1198	C-R	415219
11981	HUB-C	471744!
11981LPD	JN-MN	416267!*
11981LUP	JN-MN	416267!
11982LPD	JN-MN	471818*
11982LUP	JN-MN	471818
1198434	HYST	416273
119865	US-EL	416380!
1198816	HYST	471684!
1198RC	SUL	471765!
1199-B1614	WHITE	5471
11991	BU-SP	415023
119951	GMC	417562
119952	GMC	415645!
119952	GMC	455104
1199596	GMC	331301N
1199777	GMC	7751H
1199777MPM	GMC	7751H
1199A-1665	ROCKW	JV701
1199A-3125	ROCKW	JV1101=
1199A-3329	ROCKW	JX1990=
1199B-1614	ROCKW	JV701
1199B-1666	ROCKW	370006A
1199B-3148	ROCKW	JV1122=
1199E-1669	ROCKW	JV753
1199E-2059	ROCKW	J1129
1199E-2527	ROCKW	J1134
1199F3152	GAL	JV1126=
1199J-2428	ROCKW	J1197*=
1199J-2652	ROCKW	J1128
1199J-2652X	ROCKW	J1128
1199M3159	GAL	JV1132=
1199P3162	GAL	JV1134=
1199P3164	GAL	JV1136
1199R3164	GAL	JV1136
1199S-3139	ROCKW	JV1113=
1199T3166	GAL	JV1138=
1199T3166	ROCKW	JV1138=
1199X3534	GAL	JV1355=
1199Z3146	GAL	JX1120
119B152	FED	473205
119E-70	HWY	415449!
119E-9	HWY	472016
119E70	FWD	415449!
119T5	WHITE	472144!
11A1166	FED	416153!
11A1208	FED	417344!
11A1208	GMC	417344!
11A1214	FED	417316!
11A1301	FED	471689!
11A1369	FED	410496!
11A1466	FED	6635S
11A1480	FED	417134
11A2139	FED	412119
11A2398	FED	415023
11A2399	FED	473447
11A2520	FED	415001!
11A2568	FED	415001!
11A5167	FED	416288!
11A6070	FED	5408
11A6071	FED	470530!
11A6072	FED	472179
11A6109	FED	416738!
11A6109	FED	450096
11A6205	FED	473203
11A6240	FED	410825
11A7033	FED	472164!
11A7073	FED	472164!
11A7226	FED	417159
11A7227	FED	415137!
11A7227	FED	418028
11A8151	FED	471192
11A8221	FED	473473
11A8285	FED	417487
11A8318	FED	473010!
11A8344	FED	470059
11A8344	FED	470380!
11A8426	FED	415988
11A8486	FED	415960!
11A8558	FED	417355!
11A8600	FED	5751
11A8729	FED	473450
11A8829	FED	50631
11A8921	FED	415458!
11A8942	FED	473231!
11A8975	FED	415960!
11A8982	FED	472144!
11A8996	FED	470530!
11A906	OSHKO	411253!
11A9083	FED	411500
11A9110	FED	471766!
11A9210	FED	472636!
11A9248	FED	472394
11A9249	FED	472016
11A9250	FED	472394
11A9260	FED	472636!
11A9327	FED	415449!
11A9419	FED	416654
11A9494	FED	416654
11A9506	FED	415449!
11A9508	FED	472636!
11A9508	NAPCO	472636!
11A9509	FED	415449!
11A9577	FED	415960
11A9655	FED	415041
11A9670	FED	472636!
11A9681	FED	410102
11A9682	FED	470334!
11A9767	FED	473367
11A9767	FED	473367!
11AE-0210	WHITE	6638S
11B10141	NAPCO	55357
11B2363	FED	416654!
11B7096	FED	473228!
11B8381	FED	370036A
11B8639	FED	472394
11B8943	FED	411253!
11BE0210	WHITE	370048A
11BE0210	WHITE	380048A
11BK126	MACK	415995!
11BMT267	MACK	411253!
11BMT340	MACK	417159
11BMT343	MACK	415137!
11BMT343	MACK	418028
11BMT422	MACK	417344!
11C1677	FED	473215!
11C4202	FED	472016
11CB-0210	WHITE	417254
11CD0260	WHITE	370048A
11CD0260	WHITE	380048A
11CH-0210	WHITE	370003A
11EHT271	MACK	472636!
11EHT307	MACK	415449!
11FT-B-0210	WHITE	5471
11G3211	LEYLD	1097N
11G3270	LEYLD	1097N
11X15910A	JOHND	417563
11X15911A	JOHND	416380!
11X17X4	FORSH	11X17X4
11X17X4	SIMRT	11X17X4
11X17X4SC	TRSCM	11X17X4
11X17X4TC	TRSCM	11X17X4
11X22X7	FORSH	11X22X7
11X22X7	SIMRT	11X22X7
11X22X7SC	TRSCM	11X22X7
11X22X7TC	TRSCM	11X22X7
11X24631A	JOHND	417254
11X25647A	JOHND	417621!
11X26X7	FORSH	11X26X7
11X26X7	SIMRT	11X26X7
11X26X7SC	TRSCM	11X26X7
11X26X7TC	TRSCM	11X26X7
11X30X7AS	ISP	11X30X7
12-048027	FAIRB	473228
12-100210	TW-CO	415995!
1200	C-R	5460
1200-12333LPD	JN-MN	417608
1200-14671STLPD	JN-MN	417608
1200-3737LPD	JN-MN	417608
1200-6951LPD	JN-MN	417608*
1200-9030LUP	JN-MN	417608
120005	SPG	712111
120017	SPG	712108
120051	C-R	417608
1200530	C-R	417608
1200580	C-R	417608
120060	C-R	417608*
120061	C-R	417608
12006LPD	JN-MN	470334!
12006LUP	JN-MN	470334!
12007LPD	JN-MN	473367!
12007LPD	JN-MN	473367
12007LUP	JN-MN	473367
12007LUP	JN-MN	473367!
12009	ONAN	450269
1201	C-R	J729+75251S
12010	HERCU	412119
12011	C-R	31X44X8
12011550	NOK	1953
12016	CLIMX	476838!
120165H	IH	412871!
120171	MINNM	470954!
120171	OLIVE	470954!
1201K1	WHITE	323138!
1202	C-R	5462$
120243	UNIVE	473367!
120243	UNIVE	473367
120244	MICH	473367!
120244	MICH	473367
120250	MICH	473010!
120250	UNIVE	473010!
120262	MICH	473232
120268	UNIVE	481864
120269	MICH	481864
120275	MICH	474274
120275	UNIVE	474274
120276	MICH	450275
120287	MICH	473444
120287	UNIVE	473444
120299	UNIVE	450415
120300	UNIVE	414268!
12030A	HERCU	472179
12031A	HERCU	417488!
120325	UNIVE	450467
12032A	HERCU	471224
12033A	HERCU	472439
12034A	HERCU	472492!
12038LUP	JN-MN	471526!
12043247	GMC	9845
1205-B-1250	ROCKW	386025A
1205-B-1250	ROCKW	416158
1205375	HOUGH	417316!
1205B-366	ROCKW	B300
1205B2264	ROCKW	370001A
1205D-1850	ROCKW	370037A
1205E-1851	ROCKW	370036A
1205E-1851	ROCKW	370349A
1205L-1260	ROCKW	370065A
1205M-1469	ROCKW	370037A
1205M-1469	ROCKW	370338A
1205P-1212	ROCKW	386025A
1205P-1212	ROCKW	416158
1205Q2123	ROCKW	484206
1205R2488	ROCKW	100067
1205X-752	ROCKW	6954S
1206	ALOY	1196
1206	C-R	417505
12060LPD	JN-MN	415284
12060LUP	JN-MN	415284
12061	DGASK	35224
120632H	IH	5MR71
12064	EATON	5M867
1206OS	JN-MN	472636!
1207	C-R	370019A
12070	JNSON	415984!
120728	GMC	418028
120728	GMC	455137!
12075	BENDI	471442!

! Industrial Size/Type * Minor Width Difference $ F-M Number Is Part Of A Kit
= The U.S. customer service number is 877-4-TIMKEN. The Canadian customer service numbers are 800-565-4927 (English) and 800-565-0438 (French-Canadian).

Mfr. No.	Name	Zero Duplication or Recommended Industrial
12076LPD	JN-MN	**470954**!
12076LUP	JN-MN	**470954**!
12078LPD	JN-MN	**417596**
12078LUP	JN-MN	**417596**
1208	C-R	370005A
1208	SPG	48X72X7
12082SB	SPG	**472082**
12089LPD	JN-MN	**415938***
12089LUP	JN-MN	**415938**
1208RC	SUL	**471553**!
1209	ALOY	1178
12091	ONAN	**470954**
12092	ONAN	**471554**!
120966	HOUGH	240735
12098A	CONTI	**455194**
120A04805	TROS	**480821**!
120A05604	TROS	340413
120A1000.25	TROS	342517
120MF-23	MACK	730004
120X140X13SC	TRSCM	120X140X13!
120X140X13TC	TRSCM	120X140X13!
120X145X12SC	TRSCM	120X145X12!
120X145X12TC	TRSCM	120X145X12!
120X150X12SC	TRSCM	120X150X12
120X150X12TC	TRSCM	120X150X12
120X160X12SC	TRSCM	120X160X12
120X160X12TC	TRSCM	120X160X12
1210	C-R	**417020**
1210	WMG	224015
12100	MICH	**471103**!
12100	UNIVE	**471103**!
1210076	TW-CO	**413246**
121012	CLARK	7700S!
121017H1	HOUGH	**473231**
12108	C-R	**417570**
1211	C-R	5481
12110	JNSON	J1118
12110	O-M	J1118
12115LPD	JN-MN	**415379**
12115LPD	JN-MN	**415379**!
121169	CLARK	JV1133=
121194VB	TRSCM	203016
1212	ALOY	1953
12121	C-R	203016
12122LPD	JN-MN	**455194***
12122LUP	JN-MN	**455194**
12123	C-R	**450048**
12124	C-R	203025
12124LPD	JN-MN	**473421**
12124LUP	JN-MN	**473421**
12125	MICH	50010*
12125	UNIVE	50010
121250	MICH	450260
121250	UNIVE	450260
121268	UNIVE	450073
121269	MICH	450073
121275	MICH	450284=
121275	UNIVE	450284=
121277	CLARK	**476470**!
121277	CLARK	**476470**
1213	C-R	5495
12130	C-R	**450048**
121305	CLARK	**413247**!
12131	C-R	**450173**
12133	C-R	**450173**
1213305	CLARK	**413247**!
12133A	VICK	**417600**
12134	C-R	**450173**
12135	DGASK	16213
121374R91	IH	**471787**!
12137A	HERCU	**474278**!
12139	JNSON	**416664**!
1214	C-R	**417505**
12146	JNSON	**415196**!
121477R91	IH	**410825**
121482	CASE	**472015**
12149LPD	JN-MN	**415124***
12149LUP	JN-MN	**415124**
1215	C-R	370003A
12150A	HERCU	**471795**
12151VB	TRSCM	240736!
12151VB	TRSCM	343186
12152	C-R	450177
12156LPD	JN-MN	**417504**
12156LUP	JN-MN	**417504**
12158	JNSON	J1130
12159LPD	JN-MN	**415937**!
1216	ALOY	1012
12160	CALI	**415577**
12161VB	TRSCM	240356!
12161VB	TRSCM	340356
12162SB	TRSCM	**474278**!
12162SB	TRSCM	6859S
12162TF	TRSCM	322353!
12162TF	TRSCM	323126
12162VTB	TRSCM	**474278**
12163LPD	JN-MN	**472012**
12163TB	TRSCM	**474278**
12163TM	TRSCM	353135
12164SS	JN-MN	487945
12165	C-R	203025
121693	CLARK	**472924**!
1217	C-R	5453
12172TB	TRSCM	**471413**!
12172TBY	TRSCM	7412S
12172VHY	TRSCM	**471413**
12172VSB	TRSCM	**471413**
12173TC	TRSCM	**471413**
1218072	FMC	**471689**!
12182TB	TRSCM	**471737**
12184	DGASK	35418
12184LUP	JN-MN	5115
12187	C-R	710516
121896	KOEH	**417509**
1218B	GOODM	**470625**!
1219	C-R	**417506**
1219114	FMC	473437
12192VB	TRSCM	204507!
12192VH	TRSCM	204507!
12194KB	TRSCM	8429S
12194VB	TRSCM	203029
12194VHY	TRSCM	204029
12195	CLAYN	**474281**!
121954SB	TRSCM	3199
12196	CLAYN	**473313**
121964VB	TRSCM	203012
12196LUP	JN-MN	**417365**
121972VB	TRSCM	441319
121974VB	TRSCM	203025
121982TB	TRSCM	**471750**!
121982TB	TRSCM	**471750**
121982VAY	TRSCM	**471750**
121982VH	TRSCM	**471750**
121984SA	TRSCM	**471750**
121SR-16	MACK	730003
121SR-17	MACK	730019
121SR-18	MACK	730149
121SR-22	MACK	730004
122	WGEAR	**455480**!
122005A	HARWA	12X20X5
12202TB	TRSCM	**471766**!
12202TB	TRSCM	**471766**
12202VH	TRSCM	**471766**!
12204	WITTE	**474253**!
122062TB	TRSCM	**471787**!
122062VH	TRSCM	**471787**
12209LUP	JN-MN	416102
1220B	GOODM	**473228**
1220D	GOODM	**473228**
1221	ALOY	1955
1221	C-R	370036A
1221	C-R	370349A
12210LPD	JN-MN	**473422**
12212	FUNK	**415995**!
12212TB	TRSCM	**471795**
12212VSB	TRSCM	482230N
122134	CLARK	J1138
122135	CLARK	**415938**
122169	LETN	J1124
122169	WABCO	J1124
122170	LETN	**415437**
122170	WABCO	**415437**
122177	LETN	**471760**
122177	WABCO	**471760**
122197	LETN	**471554**!
122197	WABCO	**471554**!
1222	C-R	370036A
1222	C-R	370349A
1222	UNIVE	455037
12220	C-R	370036A
12220	C-R	370349A
12220	DGASK	35224
122200	LETN	**472185**!
122200	WABCO	**472185**!
122216A	OSHKO	455820
1222309	WOOL	**417621**!
122250	MICH	**473234**
122250	UNIVE	**473234**
122262	MICH	**473235**!
122262	UNIVE	**473235**!
122268	UNIVE	**474265**
122269	MICH	**474265**
12227	CLAYN	**472016**
122275	MICH	**473236**!
122275	UNIVE	**473236**!
122287	MICH	**473446**
122287	UNIVE	**473446***
1223	C-R	370036A
1223	C-R	370349A
1223	C-R	380036A
122306	MICH	470086
122306	UNIVE	470086*
122309	WOOL	**417159**
122318	UNIVE	450533
12232F	IH	**415001**!
12233TB	TRSCM	**471808**!
12233TB	TRSCM	**471818**
122407A	HARWA	12X24X7
122411R91	IH	7600S
12243	JNSON	**415234**!
12244SS	JN-MN	342613!
1225	C-R	370036A
1225	C-R	370349A
12250	C-R	710172
12253	GEM	**472560N**!
12253LPD	JN-MN	**416297**
12253SB	TRSCM	481833V
12255R	OLIVE	**415036**
12256	JNSON	J1111
12258	JNSON	**416273**!
12259	DIVCO	**410308**!
12259	HUGKE	**410308**!
1226	C-R	370036A
1226	C-R	370349A
1226	CLARK	**471821**!
122606	CLARK	417364
122607	CLARK	**415551**
122664	CLARK	370020A
12267776	GMC	**471652**
12268A	C-R	**450593**!
122690	HOUGH	**473459**
122690H1	HOUGH	**473459**
1227	C-R	HU019A
12270LUP	JN-MN	**416557**
122740	CLARK	**413248**
12278B	HERCU	**415196**!
12283TB	TRSCM	**470806**
1229	C-R	HU014A
12294LPD	JN-MN	**473440**!
122D6	WHITE	55353
122G23137	GR-DV	**417967**!
122G32137	GR-DV	**417967**!
123	WGEAR	**417254**
1230	ALOY	1977
1230	C-R	HU014A
12301	C-R	1121
12301	C-R	710332
12302	GWI	**415027**
12302	GWI	**415027**!
12302148	GMC	442874
12302149	GMC	**472394**
12302150	GMC	482126
12302151	GMC	4148
12302159	GMC	**412119**!
12303049	GMC	**472560N**!
12303289	GMC	2146
12303340	GMC	8935S
12303342	GMC	6936S
12303343	GMC	5337
12303470	GMC	40316S
12303471	WMG	51322
12303524	GMC	**417487**
12303585	GMC	44052
12303587	GMC	44053
12303595	GMC	**417480**!
12303596	GMC	**415958**
12303596	GMC	**415958**!
12303767	GMC	342805
12303771	GMC	240735
12303772	GMC	**472560N**
12303833	ACDEL	380003A
12303833	ACDEL	**417506**
12303834	ACDEL	370012A
12303835	ACDEL	**418028**
12303836	ACDEL	370019A
12303837	ACDEL	370021A
12303838	ACDEL	370001A
12303840	ACDEL	370023A
12303841	ACDEL	**417505**
12303842	ACDEL	380131A
12303842	ACDEL	**416158**
12303845	ACDEL	**415058**
12303846	ACDEL	370033A
12303853	ACDEL	370003A
12303854	ACDEL	370065A
12303855	ACDEL	370106A
12303889	ACDEL	376590A
12303892	ACDEL	370005A
12303893	ACDEL	370006A
12303902	GMC	1209
12303910	GMC	**484058**
12303911	GMC	340356
12303912	GMC	**482253**
12303932	ACDEL	3945
12303932	GMC	3945
12304127	WMG	9161
12304134	GMC	**415085**!
12304134	GMC	456648

! Industrial Size/Type * Minor Width Difference

= The U.S. customer service number is 877-4-TIMKEN. The Canadian customer service numbers are 800-565-4927 (English) and 800-565-0438 (French-Canadian).

Mfr. No.	Name	Zero Duplication or Recommended Industrial
12304152	GMC	9376
12304153	GMC	5072
12304155	GMC	**417158**!
12304206	GMC	6960
12304211	GMC	40769S
12304224	GMC	**350936**
12304270	GMC	4250
12304273	GMC	6781
12304275	GMC	7381S
12304280	GMC	2689S
12304286	GMC	9599S
12304290	GMC	**471316**
12304330	GMC	1955
12304330	GMC	52X65X9!
12304639	GMC	8429S
12304644	GMC	40286
12304646	GMC	**471652**
12304646	GMC	482208!
12304720	WMG	7412S
12304725	GMC	**473234**
12304882	GMC	**417158**!
12304883	GMC	**415458**
12304890	GMC	**415960**!
12304894	GMC	2655
12304898	GMC	**415991**!
12304898	GMC	**415991**
123048H1	IH	**470774**!
12304972	GMC	6465
12305064	GMC	8549S
12305065	GMC	2642
12305146	GMC	**473228**
12305147	GMC	**473452**
12305151	GMC	**410737**!
12305152	GMC	340797
12305156	GMC	**410308**!
12305159	GMC	5202
12305161	GMC	5203
12305164	GMC	5205
12305166	GMC	**472164**!
12305167	GMC	**471271**!
12305173	GMC	2506
12305279	GMC	**417355**!
12305279	GMC	485497
12305284	GMC	3604
12305323	GMC	1180
12305323	GMC	41X55X7!
12305324	GMC	1181
12305324	GMC	41X56X7!
12305329	GMC	7687S
12305330	GMC	**473459**
12305331	GMC	7188S
12307	GWI	415832
1230781	FMC	**471689**!
1231	C-R	HU007A
123111	ALLCH	**415995**!
12318M1	C-R	450536
12318M1	C-R	**471535**!
1232	ALOY	1174
1232	C-R	HU013A
12320	C-R	710101
123207A	HARWA	12X32X7
123208	CLARK	**474272**!
12320B	C-R	450535
12320B	C-R	**471264**!
123222SB	TRSCM	8293S
12325	C-R	**251511**
12326	EMRSN	**471737**
123262	MICH	**450068**
123262	UNIVE	**450068**
123268	UNIVE	50075=
123269	MICH	50075=
123270	HYST	**415960**
123275	MICH	50191
123275	UNIVE	50191
12328	C-R	240736
123285	AM WH	**417570**
123287	MICH	50081
123287	UNIVE	50081*
12329	C-R	**251511**
1233	ALOY	1183
1233	C-R	HU009A
12330	C-R	343186
123315	CUMMI	**416404**!
12332J	DIA	**410708**
12333LPD	JN-MN	**417608**
12334	C-R	240356
12335	C-R	**474278**
12335	DIA	5957S
12335	EATON	5957S
12336	C-R	**474278**!
12336	C-R	6859S
12336358	GMC	**473241**
12336T2	DIA	**473234**
12337	C-R	**474278**
12337860	GM	427RR
12337LUP	JN-MN	**471281**!
12338	C-R	**474278**!
12338023	GMC	710101
12338F	DIA	**472636**!
1234	WHITE	**471643**!
12340	C-R	**471413**
1234003	CATER	**415995**
123409	CLARK	**416158**
12341	C-R	**474278**!
12342	C-R	**474278**!
12343	C-R	**471413**
12344	C-R	353135
12344	C-R	**474278**!
1234498	GMC	712146
12346	C-R	**474278**!
1234705	BENDI	**471442**!
1234727	BENDI	**471224**!
1234835	BENDI	6863S!
1234836	BENDI	**471535**!
123486	CLARK	**471272**!
1234885	BENDI	**470954**!
1234896	BENDI	**410496**!
1234899A	BENDI	**471344**
12349	C-R	240356
1235	ALOY	1179
1235	CALI	50631
12350	C-R	322353*
12350	C-R	323126
12350	C-R	**474278**!
12351	C-R	**474278**!
12351	C-R	6859S
12355	C-R	**471413**!
12355	C-R	7412S
12355	C-R	PSK-1
1235500	DRESS	**471765**!
123550005	EL-MO	**471765**!
12356	C-R	7412S
12357	C-R	**471413**
12357LDS	JN-MN	**415263**
12358	C-R	**471413**!
12359	C-R	**471413**!
1235A	CALI	**412943**
1236	C-R	HU012A
12360	C-R	712025
12361	C-R	**471413***
12361	GMC	**471413**
1236163	GMC	2689S
1236164	GMC	2689S
1236165	GMC	2689S
12362	C-R	**471413**!
12363	C-R	**471413**!
12363	C-R	7412S
1236324	GMC	2043
12364	C-R	**471413**!
12364LPD	JN-MN	472020
12365	C-R	**471413**
12365LUP	JN-MN	**417598**
12366	C-R	**471413**!
12366	C-R	7412S
123668	CLARK	JV1128=
12366LPD	JN-MN	**417351**!
12367LPD	JN-MN	417543
12368	C-R	**471413**!
12369	C-R	**471413**
1237	ALOY	1181
12370	C-R	**471413**!
12371	C-R	**471413**!
12371	C-R	PSK-1
12372	C-R	**471413**!
12372	C-R	7412S
12373	C-R	**471413**!
123767	CLARK	345035
123779	CLARK	**415389**
12379	C-R	**471737**=
1238	C-R	HU011A
12380	C-R	**471737**
123805R91	IH	370020A
123805R91	IH	**415351**!
12381	C-R	**471737**
12383	C-R	**471737**
12384	C-R	**471737**
12384477	GMC	**472572**
123848	CLARK	370012A
12385	C-R	**471737**=
12386	C-R	**471737**
12387291	GMC	4525V
12389	C-R	**471737**=
1238D	CALI	416008
1239	ALOY	1180
12392	C-R	PSK-1
123947	CLARK	JV1136
12396	C-R	3199*
12398	C-R	203012*
12399	C-R	203012
123G63-99	GR-DV	**471766**!
1240	C-R	5406
12400	C-R	6906S
1240037843	COLLS	**472179**
12401	C-R	**471750**!
124025	CLARK	417283
124026	CLARK	JV1190=
12403605	TROS	**471551**!
12403806.5	TROS	**476470**
12404	C-R	203029
12404004	TROS	**471255**!
12404006	TROS	**471255**!
124040065	TROS	**471255**!
12404205	TROS	**481073**
12404404	TROS	**471553**!
12404406.5	TROS	**471553**!
12404804	TROS	**471554**!
12404808.5	TROS	**471554**!
12405	C-R	**471750**!
12405004	TROS	**481443**!
12405006	TROS	**481443**!
12405006.5	TROS	**481443**!
12405006.5NA	TROS	**481443**!
12405204	TROS	**471231**!
12405205	TROS	**471231**!
12405206.5	TROS	**471231**!
12405604	TROS	**471267**!
12405605	TROS	**471267**!
124056065	TROS	450398
124056065	TROS	**471267**!
12405608	TROS	**471267**!
12406	C-R	**471750**!
12406004	TROS	340787
124063	CLARK	JV1139=
124065	CLARK	**417555**!
12406LPD	JN-MN	**471645**
12407	C-R	204507!
12407	C-R	**471750**
12407LPD	JN-MN	**473238**!
12409LPD	JN-MN	**415697**!
12409LPD	JN-MN	455547
12409LUP	JN-MN	**415697**!
12409LUP	JN-MN	455547
1241	ALOY	224015
12410	C-R	50445*
12410003	TROS	**252277**
12410802	TROS	340835
12411	C-R	204029
12411	C-R	204507!
12416	C-R	**471472**!
124163	GOODM	**471137**
124163	JEFF	**471137**
124164	GOODM	**473215**!
124164	JEFF	**473215**!
124165	GOODM	**470334**!
124165	JEFF	**470334**!
124166	GOODM	**415960**!
124166	JEFF	**415960**!
12416M1	C-R	**471472**!
12418	C-R	**471535**!*
12419	C-R	**473405***
1241990	GMC	8835S
1241991	GMC	8660S
1241A3	WHITE	**415284**
1242	CALI	**417604**
1242066	GMC	2043
1242067	GMC	2043
1242068	GMC	2043
12422	C-R	**471538**!*
12423	C-R	**470506**!
124234	CLARK	**416332**!
12423LUP	JN-MN	**416039**
124250	MICH	**472164**!
124250	UNIVE	**472164**!
124256	UNIVE	**472193**!
12426	C-R	**471539**!
124262	MICH	**472185**!
124268	UNIVE	**470334**!
124269	MICH	**470334**!
12427	C-R	**471750**!
124275	MICH	**472179**
124275	UNIVE	**472179**
124276	MICH	**473447**
124278	MICH	**470334**!
124278	MICH	50289
124278	UNIVE	**470334**!
124278	UNIVE	50289
12428	C-R	**471750**!
124287	CLARK	**416921**=
124287	MICH	**471141**!
124287	UNIVE	**471141**!
12429	C-R	**471750**!
124299	UNIVE	**473448**
1243	C-R	100495
1243	C-R	5601
124300	UNIVE	**471984**
124306	MICH	**473313**
124306	UNIVE	**473313**
124310	CLARK	JV1140=

! Industrial Size/Type * Minor Width Difference

= The U.S. customer service number is 877-4-TIMKEN. The Canadian customer service numbers are 800-565-4927 (English) and 800-565-0438 (French-Canadian).

Mfr. No.	Name	Zero Duplication or Recommended Industrial
124318	*UNIVE*	**470088**
124319	*MICH*	**470088***
12432	*C-R*	**471750**
124325	*CLARK*	370078A*
12433	*C-R*	**471750**
124331	*CLARK*	J1138
124337ISL	*MICH*	210945
1243396	*GMC*	**473179**
1243397	*GMC*	**473179**
1243400	*GMC*	9613S
1243402	*GMC*	9613S
1243465	*GMC*	2043
1243467	*GMC*	2043
12436	*C-R*	**471750**
1243658	*CHRYS*	5401
1243659	*CHRYS*	5403
1243660	*CHRYS*	5405
12437	*C-R*	**471750**
12439	*C-R*	**471750**!
124394	*MIHLE*	**416891**!
124395	*MIHLE*	**416657**
1244	*ALOY*	1188
1244	*ALOY*	224820
1244	*ALOY*	48X62X8!
1244	*C-R*	4561V
1244	*C-R*	5602
12440	*C-R*	**471750**!
12441	*C-R*	**471766**!
12441LPD	*JN-MN*	**417567**
12442	*C-R*	**471766**!
12442	*FUNK*	**415449**!
124429	*CLARK*	3016
12443	*C-R*	**471766**!
124430	*CLARK*	**417545**
124431	*CLARK*	416112
12444	*CHAMP*	**471267**!
124443	*MIHLE*	**470625**!
124445	*CLARK*	JV1869=
12445	*C-R*	**471766**
12446	*C-R*	**471766**
124464R91	*IH*	**412871**!
12447	*C-R*	**471766**!
12448	*C-R*	**471766**!
124480	*CLARK*	370082A*=
1245	*C-R*	5603
12450	*C-R*	**471766**!
12453	*C-R*	**471766**!
124536R91	*IH*	**410308**!
12454	*C-R*	**471766**!
12456	*C-R*	**471766**!
12458	*C-R*	**471766***
12458	*C-R*	**471766**!
12461	*C-R*	**471766**!
12461	*DIVCO*	**470954**
124633R91	*IH*	**471570**
12464	*C-R*	**471766**!
12466	*C-R*	**471766***
12466	*C-R*	**471766**!
12467	*C-R*	**471766***
12467	*C-R*	**471766**!
12469	*C-R*	**471766***
12469	*C-R*	**471766**!
12471686	*GMC*	4762N
12472	*C-R*	**471766***
12472	*C-R*	**471766**
12473	*C-R*	**471766***
12473	*C-R*	**471766**
12475	*C-R*	**471766**
12478060	*GMC*	**470530**
12480	*C-R*	**471766**
12480L	*IH*	**450593**!
12481	*C-R*	**471766**
12481LUP	*JN-MN*	**416077**
12482	*C-R*	**471766**
12483	*C-R*	**471766**=
12484	*C-R*	**471766***
12484	*C-R*	**471766**
12485	*C-R*	**471766***
12485	*C-R*	**471766**
124891620	*TROS*	8996S=
12489LUP	*JN-MN*	**471270**!
1249-026	*PYUNG*	225225
12491	*C-R*	**471787**
12492	*C-R*	**471787**
12494	*C-R*	223255
12494LPD	*JN-MN*	**415984**!
124973	*CLARK*	**417602**!
124974	*CLARK*	JV1669=
125012	*CUMMI*	**415458**!
125012	*OLIVE*	**415458**!
125020	*CLARK*	417385=
125020	*MIHLE*	**455576**!
12504	*C-R*	**471787**
12506	*GWI*	**413247**!
12508	*C-R*	**471787**
1251	*ALOY*	**1213N**
12510	*C-R*	50445
125101	*NAPCO*	**472439**
125117	*NAPCO*	**470898**
12513	*LEROI*	**471554**!
12513-1	*LEROI*	**471554**!
125133	*LEROI*	240319
12514	*GWI*	**472016**
125142	*LEROI*	6759S
12516	*C-R*	**471472**
125162	*UNIVE*	50266
12516M1	*C-R*	**471472**
12516M1	*HU-WR*	**471472**!
12517	*LEROI*	450033
12518	*C-R*	**471535**!
12519	*C-R*	**473405**
125192VB	*TRSCM*	204507!
125195	*CLARK*	370039A
1252	*CLIMX*	450655=
1252	*LEROI*	450655=
12522	*C-R*	**471538**!
12522	*LEROI*	**411253**!
12523	*C-R*	**470506**
125236	*LEROI*	6489
125238	*LEROI*	204035
125238	*WABCO*	204035
12523M1	*C-R*	**470506**
125248	*CLARK*	8126S
12526	*BU-SP*	**471267**!
12526	*C-R*	**471539**!
12526	*LEROI*	240319
125262	*MICH*	50266
125262H1	*HOUGH*	**470898**
125268	*UNIVE*	450269
125269	*MICH*	450269
12526C	*MASSE*	5M643
12526M1	*C-R*	**471539**!
12527	*C-R*	**471787**!
12527	*LEROI*	**470590**
12527	*NAPCO*	**480630**!
125275	*MICH*	450285
125275	*UNIVE*	450285
125276	*MICH*	**471866**!
12528	*C-R*	**471787**!
12528	*LEROI*	**481073**
12528LPD	*JN-MN*	**472572**!
12529	*C-R*	**471787**
12529	*LEROI*	240462
12529	*NAPCO*	**411330**!
12530	*C-R*	**471787***
12530	*LEROI*	**471255**!
12530	*NAPCO*	**472394**
12530L	*IH*	450129
12530L	*IH*	**472826**!
12531	*NAPCO*	**410496**!
125318	*UNIVE*	450089
125319	*MICH*	450089
12532	*C-R*	**471795**
12532	*NAPCO*	**471391**!
12533	*LEECE*	**471255**!
12534	*C-R*	450177
12535	*C-R*	450177
12535	*LEECE*	**450593**!
12536	*C-R*	450177
12539	*NAPCO*	353141!
125398	*CLARK*	JV1130=
1254	*ALOY*	1214
1254	*LEROI*	**473215**!
12540	*NAPCO*	**416125**!
12541	*JOHND*	**417316**!
125412	*BENDI*	**471466**!
12544	*LEROI*	**471554**
12544075	*GMC*	4813V
12545	*C-R*	**471795**
12545	*GWI*	**417316**!
12546240	*GMC*	**417505**
12547	*C-R*	450177*
12547	*NAPCO*	**471341**!
12548	*C-R*	450177*
12549	*C-R*	**471795**
12549329	*GMC*	**416288**
12550	*C-R*	**471795**
12550574	*GMC*	100085
12551	*C-R*	**471795**!
12551	*NAPCO*	**470898**!
12552	*C-R*	**471795**
12552	*LEROI*	450803
12552	*NAPCO*	**415483**!
12552219	*GMC*	5279
12552427	*GMC*	100058
12552428	*GMC*	100058
12552A	*C-R*	**471689**!
12553	*C-R*	**471795**
12555767	*GMC*	600305
12555769	*GMC*	5512
12556107	*GMC*	710262*
12556355	*GMC*	710262*
12557688	*GMC*	100085
12558-1	*LEROI*	**415001**!
125584	*HYST*	**415725**!
12559	*C-R*	1070=
12559-1	*LEROI*	**415960**!
1255938	*GMC*	712146
1256	*LEROI*	470059
1256	*LEROI*	**470380**!
125625	*CLIMX*	**417254**
125625	*WAUKE*	**417254**
12564LDS	*JN-MN*	**471567**!
12565	*C-R*	**471795**
12565LDS	*JN-MN*	**415991**
12565LDS	*JN-MN*	**415991**!
125663	*HYST*	**473367**
125689	*HYST*	**417350**!
12569	*C-R*	**471795**
125694R91	*IH*	**470954**
12570	*C-R*	**471795**
125710	*HYST*	**471554**!
125716	*CUMMI*	**471141**!
125716	*OLIVE*	**471141**!
125722	*CUMMI*	**472144**!
125722	*OLIVE*	**472144**!
12574	*BU-SP*	**415035**!
12574	*C-R*	**471795**
125742	*CLARK*	**415035**
12575	*BU-SP*	**476470**
125769	*CLARK*	370109A*
12577	*BU-SP*	**415116**
12577	*C-R*	**471801**!
12578	*BU-SP*	**417562**
125784	*ALLCH*	**415041**
12579	*C-R*	**471801**!
1257G	*OSHKO*	**415988**
1258	*LEROI*	**473367**!
1258	*LEROI*	**473367**
12581	*FULLE*	484064V
12581	*KINNR*	**471571**
12582	*C-R*	42081S!
12582	*C-R*	7686S*
12583	*C-R*	**471801**
12584	*C-R*	**471801**
12586	*C-R*	**471801**!
125880	*GMC*	**417262**!
1259	*LEROI*	450089
12590	*C-R*	8293S*
12590	*LEROI*	**471442**!
125904	*CLARK*	**417433**=
125954	*CEMAC*	**471554**!
12596	*C-R*	**471801**
12597	*C-R*	**471801**
125A24	*C-R*	**470954**
125A848AE1	*GE*	**350364**
125A848AE11	*GE*	472951
125A848AE11	*GE*	**474252**
125A848AE16	*GE*	450398
125A848AE16	*GE*	**471267**!
125A848AE2	*GE*	**330385**!
125A848AE3	*GE*	**471103**!
125A848AE4	*GE*	320457
125A848AE5	*GE*	**471472**!
125A848AE6	*GE*	**472705**!
125A848AE7	*GE*	**471255**!
125A848AE9	*GE*	**470954**!
125A848AF1	*GE*	**472843**
125A848AF2	*GE*	**471763**
125A848AF3	*GE*	**470590**
125A848AK5	*GE*	**471472**!
125A848BC1	*GE*	**473237**!
125A848BC2	*GE*	**471564**
125A848BF1	*GE*	**473454**
125A848BF2	*GE*	**471766**!
125A848BJ2	*GE*	6668S
125A848BJ4	*GE*	**471267**!
125A848BR1	*GE*	**471255**!
125AM24	*C-R*	**470954**
125AMM24	*C-R*	**470954**
125AMM24Q6Y2	*C-R*	**470954**
125E22	*EATON*	JV1277=
125G24	*C-R*	**470954**!
125HD24	*C-R*	**470954**!
125HD24-Q6	*C-R*	**470954**!
125HM24	*C-R*	**470954**!
125W225	*CONE*	5166
125X150X12SC	*TRSCM*	125X150X12!
125X150X12TC	*TRSCM*	125X150X12!
125X155X12ASN	*ISP*	125X155X12
125X155X12ASN(32)	*ISP*	125X155X12
125X160X12SC	*TRSCM*	125X160X12
125X160X12TC	*TRSCM*	125X160X12
1260	*ALOY*	482126
12600	*C-R*	**471801**=
12606	*BU-SP*	**416125**!
126107C1	*IH*	**470712**!
1261171	*CHRYS*	**470774**!

! Industrial Size/Type * Minor Width Difference

= The U.S. customer service number is 877-4-TIMKEN. The Canadian customer service numbers are 800-565-4927 (English) and 800-565-0438 (French-Canadian).

Mfr. No.	Name	Zero Duplication or Recommended Industrial
12613	C-R	**471808**!*
12614	C-R	**471808**!*
12615	C-R	**471808**!
126150	BENDI	351487
126158	OLIVE	**471689**!
12616	C-R	**471808**!
12621	C-R	**471818***
126214C91	IH	**481163**!
12622	C-R	**471818**
126262	MICH	**472070**
126262	UNIVE	**472070**
126268	UNIVE	**471866**!
126269	MICH	**471866**!
126275	MICH	**473449**
126275	UNIVE	**473449**
126276	MICH	480281!
126287	MICH	**473450**
126287	UNIVE	**473450**
126299	UNIVE	450193=
1263020	CHRYS	5401
1263021	CHRYS	5403
1263022	CHRYS	5405
12631	C-R	**471407***
126318	UNIVE	**450090**
126319	MICH	**450090**
12636	GWI	**470712**!
1263697	CHRYS	6270
12637	C-R	**471833***
12638	C-R	481833V
12638LPD	JN-MN	55524
1264320	KEN	**473243**
12650	HEIL	**471466**!
1265068	CHRYS	**472636**!
126537	C-W	**417596**
12654LPD	JN-MN	**417210**!
12655	C-R	**451845**
1266	ALOY	**3395**
1266-D6	REO	370023A
12660	C-R	**450341**
126643	OLIVE	**471141**!
12666	CHAMP	**416345**!
12668	C-R	710410
1266810	CHRYS	6635S
126691	AM WH	**471649**!
12670	C-R	**470806**
1267215	CHRYS	6638S
12673	C-R	**470806***
12673	CHAMP	**415027**
12673	CHAMP	**415027**!
12673	DOMIN	**415027**
12675LPD	JN-MN	50560
126769	HYST	40627S=
12677	C-R	**453279**
1267752	CHRYS	5406
1267753	CHRYS	5406
12677LDS	JN-MN	**415937**!
12678	C-R	**453279**!
12678LPD	JN-MN	452742
126797	AM WH	417497
1268-D6	REO	370019A
126839	OLIVE	**470774**!
12685	C-R	8429S
12687	AM BR	**471760**
12688	C-R	8429S
1269681	CHRYS	**472636**!
12697	C-R	32X42X8!*
12697	C-R	710282*
12698	C-R	223215
12700	C-R	223215*
12700	C-R	32X42X7
12700	C-R	32X42X8!*
127006	ALLCH	**416339**
127006	ALLCH	455031!
1270137	CHRYS	417267
12705	C-R	223220
12706	C-R	223220
127063	HOUGH	**412119**!
127063H1	IH	**412119**
1270786	CHRYS	370036A>
1270786	CHRYS	370349A%
12709	C-R	223230
12709	C-R	32X45X7!
12710	C-R	223230*
12710	C-R	32X45X7!
12711	C-R	223230
12711	C-R	32X45X7!
127144	HOUGH	**410524**
127144H1	HOUGH	**410524**
127145R91	IH	240733
12718	C-R	223235
12718LPD	JN-MN	415832
12719	C-R	223235*
12719	C-R	32X46X6!*
1272	ALOY	442874
12725LPD	JN-MN	480491*
127262	MICH	473451!
127275	MICH	**473452**
127275	UNIVE	**473452**
127287	MICH	473453
127287	UNIVE	473453*
1273	ALOY	1217
12730	C-R	32X47X7!*
12730	C-R	3476*
12730	C-R	710310*
1273095	CHRYS	6597S
12731	C-R	3476
12732	AIRCO	340823
12733	C-R	3476
12733	C-R	710310
12734	C-R	32X48X8!
12735	C-R	223240*
12735	C-R	32X48X8!
12737	C-R	32X52X7V
12738	C-R	32X50X8!*
127381R1	IH	40185
12739	C-R	710164*
12740	C-R	32X50X8!
12740	C-R	710164
12741	C-R	710164
12742	C-R	223255
12742	C-R	32X52X7!
12743	C-R	32X52X7V
12744	C-R	223255
12744	SPICE	470950!
12744	SPICE	6241S
12745	C-R	223255*
12745	C-R	32X52X7!*
12746	C-R	223252*
12747	C-R	223253
12748	C-R	710306
12749	C-R	223240
12751	C-R	2008
127513C1	IH	**471787**!
12752	C-R	32X50X8!
127540	C-R	325940=
12755	C-R	32X55X10
12755	C-R	**451845**
127594H1	HOUGH	240151
1276	ALOY	**415960**
12760	C-R	32X56X10!*
12763	C-R	223275
12763	C-R	32X56X10!
12764	C-R	223275
12764	C-R	32X56X10!
12765	C-R	32X58X8!
12766A	C-R	415137!
12766A	C-R	**418028**
1277	ALOY	1973
12770	C-R	32X60X10!*
12770	C-R	32X60X8!
1277110	BENDI	**471689**!
127719	EATON	**416654**
127720	EATON	**415458**
127721	EATON	9773
1277238C1	IH	370082A=
12772LUP	JN-MN	**415294**!
12773LPD	JN-MN	**417539**!
12780	C-R	32X62X8
12782	C-R	32X62X8
127832	CLARK	3369*=
127891	CLARK	416556!
127891	CLARK	**472157**
1279	ALOY	5697
12790	C-R	32X72X8
127920	LEYLD	**471192**
127968R91	IH	5778
127979R91	IH	40185
127989	CLARK	**416271***=
1280	ALOY	5604
12800	AM BR	**473464**!
12800	AM BR	**473464**
128047R91	IH	**415458**!
1281	ALOY	3622
1281	C-R	HU070A
12810	C-R	710070
12810004	TROS	**472311**!
128117	CLARK	370051A
128119	HYST	**473237**!
12812	C-R	223235
12815013A	HARWA	128X150X15
12819	C-R	51032S
1282	C-R	H075
12820	C-R	470050*
128203TB	TRSCM	353137
128203TB	TRSCM	**473424**!
12821	C-R	470050
12822	C-R	470050
12823	C-R	470050
128233R91	IH	**451948**
128234R91	IH	**451948**
128262	MICH	**472439**
128262I	MICH	40071S
128262SL	MICH	**472439**
128269	MICH	**471868**
128275	MICH	**472572**!
128275	UNIVE	**472572**!
128276	MICH	**473179**!
128278	MICH	**414045**!
128278	UNIVE	**414045**!*
12828	LEROI	**481073**
128287	MICH	**473238**
128287	UNIVE	**473238**!
128299	UNIVE	**450084**!
12830	C-R	**473424**!
128300	MICH	**450084**!
128300	UNIVE	**473239**
128301	MICH	**473239**
128306	MICH	**473457**!
128306	UNIVE	**473457**!*
12830LPD	JN-MN	**473211**!
128312	UNIVE	**473240**!
128318	UNIVE	**473458**!
128319	MICH	**473458**!*
12831STLPD	JN-MN	**415219**
12832	FULLE	**473473**
12833	C-R	**473424**!
12834	C-R	**473424**!*
1284	ALOY	444116
128400	CLARK	**415458**
128401	CLARK	**416921**
12842LDS	JN-MN	**471272**!
128434	GMC	**471270**!
1285	ALOY	2002
1285-043	PYUNG	223606
12852	C-R	450124=
12853	C-R	450124=
128576	CLARK	**415960**
12857G	CLARK	**415960**!
12859	C-R	**473421**
12859	FULLE	**472560N**
12861LPD	JN-MN	**415284**
12865	C-R	**473211**!
12866	C-R	**473211**!
12866	JOHND	**471612**
1287	ALOY	1884
1287002	GMC	5M81
12876LUP	JN-MN	**471255**!
12877	C-R	**473212**!
12878	C-R	**473212**!
1288	ALOY	225230
128819	C-W	**330385**!
12883	C-R	710328*
12883	FULLE	**471224**
128847	EATON	370001A
128847	EATON	380001A
12886	C-R	223340
128861	EATON	370003A
128861	EATON	380003A
1289	ALOY	4160
128918	DURA	**471766**!
128918	FORD	**471766**!
128943	CLARK	3594*=
12894SS	JN-MN	**473224**!
128953H	IH	**450084**!
128X150X15	SIMRT	128X150X15
128X150X15SC	TRSCM	128X150X15
128X150X15TC	TRSCM	128X150X15
1290	ALOY	225110
12900	C-R	1168
12900	C-R	33X50X12!
12901	C-R	1168*
12901	C-R	33X50X12!*
12901	JNSON	**472179**
12905	C-R	**471193**
129054	US-EL	**471141**!
12907	C-R	3348
12909E	OSHKO	475348N
12909F	OSHKO	475348N
1290K1	WHITE	**450400**
1291	ALOY	225020
12910	C-R	**471193**
12912	C-R	710132
1292	ALOY	226285
129220	US-EL	340356
12925	C-R	710043
12929LUP	JN-MN	**417601**
129303H	IH	**472636**!
12934SS	JN-MN	481534
129370	HOUGH	**412119**
129386	JEFF	**416339**
129386	JEFF	455031!
129387	JEFF	**476838**!
1294	ALOY	223605
12940A	HERCU	**415991**
129418R91	IH	5778
129419R91	IH	5778
129473	JEFF	**411253**!
129474	JEFF	**415001**!

! Industrial Size/Type * Minor Width Difference > Hub Mount % Spindle Mount
= The U.S. customer service number is 877-4-TIMKEN. The Canadian customer service numbers are 800-565-4927 (English) and 800-565-0438 (French-Canadian).

Mfr. No.	Name	Zero Duplication or Recommended Industrial
129498	*HYST*	200870
129499	*HYST*	JV980=
1294991	*GMC*	8660S
129503R91	*IH*	**471267**!
12951	*DIA*	5M867
12951	*EATON*	5M867
1295A3	*WHITE*	**412119**!
1296	*F-R-H*	**472287**!
129611	*C-R*	**415482**
129636	*GOODM*	**473225**!
129636	*SUL*	**473225**!
1296810	*GMC*	40369S
1296879	*GMC*	40370S
1296913	*GMC*	40286
1296A3	*WHITE*	**472157**
129717	*GMC*	**416158**
12980	*LISLE*	RD2001
12981	*TMTR*	**471504**!
129828R91	*IH*	**473460**
12984	*OLIVE*	**473215**!
129851	*GOODM*	**417485**
129851	*JEFF*	**417485**
129852	*GOODM*	**416738**!
129852	*GOODM*	450096
129882	*GOODM*	**473229**
129882	*JEFF*	**473229**
129899	*GOODM*	**415001**!
129899	*JEFF*	**415449**!
129915	*ALLCH*	**417316**!
12993	*JNSON*	J1103
129935	*GOODM*	**415960**
129935	*JEFF*	**415995**!
129936	*HYST*	**471835**!
129941	*ALFAR*	713016
129945	*GOODM*	**471354**!
12A10039	*NAPCO*	6638S
12A2500	*MINNM*	**472492**!
12A500	*MINNM*	**472492**!
12A7000	*FED*	**470088**
12A7050	*FED*	**472924**!
12A7106	*FED*	5M466
12A7123	*FED*	450467
12A7823	*FED*	5MR71
12A8121	*FED*	**471316**
12H5079	*ROVER*	712134
12QD282	*MACK*	JV1850=
12X14333A	*JOHND*	**416404**!
12X14346B	*JOHND*	**471866**=
12X14360A	*JOHND*	**473227**!
12X15982A	*JOHND*	**472258**!
12X19X5SC	*TRSCM*	12X19X5
12X19X5TC	*TRSCM*	12X19X5
12X20X5	*FORSH*	12X20X5
12X20X5	*SIMRT*	12X20X5
12X20X5SC	*TRSCM*	12X20X5
12X20X5TC	*TRSCM*	12X20X5
12X22X7SC	*TRSCM*	12X22X7!
12X22X7TC	*TRSCM*	12X22X7!
12X24X7	*FORSH*	12X24X7
12X24X7	*SIMRT*	12X24X7
12X24X7SC	*TRSCM*	12X24X7
12X24X7TC	*TRSCM*	12X24X7
12X25X5ASN(32)	*ISP*	12X25X4.5
12X25X7SC	*TRSCM*	12X25X7
12X25X7TC	*TRSCM*	12X25X7
12X26X7SC	*TRSCM*	12X26X7
12X26X7TC	*TRSCM*	12X26X7
12X28X7SC	*TRSCM*	12X28X7
12X28X7TC	*TRSCM*	12X28X7
12X30X7SC	*TRSCM*	12X30X7
12X30X7TC	*TRSCM*	12X30X7
12X32X7	*FORSH*	12X32X7
12X32X7	*SIMRT*	12X32X7
12X32X7SC	*TRSCM*	12X32X7
12X32X7TC	*TRSCM*	12X32X7
12X35X7SC	*TRSCM*	12X35X7
12X35X7TC	*TRSCM*	12X35X7
1300	*ALOY*	1165
1300-044-001	*WARNR*	**330385**!
1300-044-009	*WARNR*	714503
1300-044-011	*WARNR*	710402
1300-044-012	*WARNR*	7692S
1300-044-014	*WARNR*	4503N
1300-044-015	*WARNR*	7412S
1300-044-019	*FORD*	710426
1300-044-019	*WARNR*	710426
1300-044-020	*FORD*	710431
13000	*VIC*	HU019A
1300016002	*WARNR*	4503N
130003	*SPG*	712105
130005H1	*IH*	**417351**!
13001	*CHRYS*	**472179**
1300113212	*TROS*	**415077**
130013	*SPG*	313842
130018R91	*IH*	**415449**!
13002	*VIC*	HU007A
130028	*SPG*	221207
13003	*VIC*	HU008A
130031	*SPG*	221735
130047	*SPG*	223510
130048	*JEFF*	**410694**!
13005	*C-R*	710124
13005	*VIC*	HU011A
13006	*VIC*	HU012A
130061	*ALLCH*	**417171**!
13007	*VIC*	HU013A
130078	*SPG*	6815
13008	*VIC*	HU014A
130093	*SPG*	4175
130096	*SPG*	2027
130102	*GOODM*	**471787**!
130108	*ATHEY*	**471765**!
130117	*ATHEY*	**471750**!
130122	*ATHEY*	**471801**!
130137	*ATHEY*	450054
130141	*ATHEY*	**473215**!
13015	*C-R*	240716
1301588	*ATHEY*	**473440**!
130169	*SPG*	**350435**
13017	*TLSMI*	**417158**=
13017	*VIC*	HU024A
13018	*TLSMI*	**416888**
130189	*HOUGH*	**418028**
13019	*TLSMI*	**416624**
13019	*VIC*	HU028A
130199	*ATHEY*	**472185**!
13020	*C-R*	6370N
13020	*VIC*	HU028A
1302012	*CLARK*	**471442**!
130204	*ATHEY*	**471141**!
130205	*ATHEY*	**473313**
130206	*ATHEY*	**470088**
13021	*C-R*	6370N
130228	*ATHEY*	**472439**
13023	*VIC*	HU034A
130233	*ATHEY*	**473238**
130236	*ATHEY*	**473457**!
13024	*VIC*	HU042A
1302481	*ATHEY*	**471391**!
13025	*VIC*	HU044A
130250	*ATHEY*	**470530**!
13026	*VIC*	HU009A
130268	*ATHEY*	**413469**!
13027	*C-R*	**473423***
130271	*ATHEY*	**472636**!
130272	*ATHEY*	**411253**!
130278	*ATHEY*	**416444**
130279	*ATHEY*	**412119**!
130287	*MICH*	**472144**!
130287	*UNIVE*	**472144**!*
130289	*ATHEY*	**415458**!
130294	*ATHEY*	**417316**!
130295	*ATHEY*	**415960**!
130299	*UNIVE*	**473460**
1303	*C-R*	5666
130300	*MICH*	**473460**
130300	*UNIVE*	**472394**
130301	*MICH*	**472394**
1303012	*CLARK*	**471442**!
130303	*ATHEY*	**415995**!
130306	*ATHEY*	**417488**!
130306	*MICH*	**473461**!
130306	*UNIVE*	**473461**!*
130312	*UNIVE*	**471391**!
130313	*MICH*	**471391**!
1303139C91	*IH*	**470898**
130315	*ATHEY*	**417485**
130318	*UNIVE*	**473462**
130319	*MICH*	**473462**
1303281	*EATON*	J1114=
13033	*C-R*	**473422**
13033	*VIC*	HU070A
130331	*ATHEY*	455024
130334	*ATHEY*	**417191**
130334	*ATHEY*	456585
130337	*ATHEY*	**415025**
130342	*ATHEY*	**415991**
130342	*ATHEY*	455146!
130354	*MICH*	**417474***
13037	*C-R*	**473210**
130370	*GOODM*	**455008**
1303701	*ATHEY*	**471341**!
130375	*ATHEY*	**417366**!
130376	*US-EL*	**416107**!
130376	*US-EL*	455073
130377	*US-EL*	**415379**
130377	*US-EL*	**415379**!
130380	*ATHEY*	**415187**
130388	*ATHEY*	**417223**
13039	*C-R*	**472826**
13039	*VIC*	HU110A
13040	*C-R*	**472826**
13043	*VIC*	HU005A
130437	*ATHEY*	**417538**
13044	*FULLE*	**418028**
13044	*FULLE*	455137!
130447	*ATHEY*	**416865**!
130448	*ATHEY*	**417546**!
13044LPD	*JN-MN*	25X47X7
13045	*VIC*	HU019A
130454	*ATHEY*	**416476**!
130455	*ATHEY*	**415072**
130457	*SPG*	320457
13046	*VIC*	HU036A
13048	*VIC*	HU031A
13049	*VIC*	HU036A
1304OS	*JN-MN*	**417600***
1305-D6	*REO*	370030A
13050	*C-R*	**472826**!
13050	*VIC*	HU066A
1305044	*GMC*	5587
1305044	*GMC*	710163
13051	*C-R*	**472826**!
13051	*VIC*	HU057A
13052	*C-R*	**472826**!
13052	*VIC*	HU058A
130528	*SPG*	370023A
130528	*SPG*	5667
130534	*HOUGH*	**472924**!
130534H1	*HOUGH*	**472924**!
13053RD	*ITM*	222860
13053RD	*ITM*	28X47X7!
13055	*VIC*	HU036A
13057	*VIC*	HU110A
130575	*SPG*	24X37X7
130578	*SPG*	222242
13058	*VIC*	HU008A
130583	*SPG*	6X16X7
13059	*VIC*	H075
13059LUP	*JN-MN*	**471466**!
1306	*C-R*	370046A
1306	*C-R*	5100
13060	*C-R*	**472826**!*
13061	*VIC*	HU037A
130612H	*IH*	**471570**!
13062	*VIC*	HU039A
13062LPD	*JN-MN*	473413
13063T	*JOHND*	**471466**
13064	*VIC*	HU065A
130643	*LEYLD*	1035=
130645R91	*IH*	**471267**!
13066LPD	*JN-MN*	224570
13066LPD	*JN-MN*	45X72X12!
13067	*VIC*	HU149A
130671H	*HOUGH*	**471341**!
1306742	*GMC*	**470530**!
1306743	*GMC*	**450307**
13068	*VIC*	HU149A
13068LPD	*JN-MN*	**471567**!
1307	*C-R*	5649
13070	*C-R*	**472826**
13070	*CHRYS*	**473457**!
13071	*C-R*	**472826**!
13071	*VIC*	HU036A
13073	*ATHEY*	**471224**!
130731	*US-EL*	**470625**!
13074	*ATHEY*	**471649**!
130748	*US-EL*	**473016**!
13075LUP	*JN-MN*	**418028**
13076	*C-R*	**473421**
13077	*C-R*	**473421**
1308	*C-R*	370023A
1308	*C-R*	5667
1308107	*CATER*	39889
13083	*C-R*	**473421***
13084	*C-R*	**473421***
1308521	*ALLCH*	**417562**
13091	*C-R*	**473211**!
13092	*C-R*	**473211**!
13093	*C-R*	**473211**!
13097	*NAPCO*	417513
13098	*NAPCO*	**417554**!
130981	*ATHEY*	**471692**!
13099	*ATHEY*	**472185**!
130X160X12SC	*TRSCM*	130X160X12
130X160X12TC	*TRSCM*	130X160X12
130X160X15SC	*TRSCM*	130X160X15
130X160X15TC	*TRSCM*	130X160X15
130X170X12	*ISP*	130X170X12
130X170X12(35)	*ISP*	130X170X12
130X170X15SC	*TRSCM*	130X170X15
130X170X15TC	*TRSCM*	130X170X15
131-405-641A	*VW*	1165
1310194	*GMC*	340724!
13103	*C-R*	**473211**!
13104	*C-R*	**473211**!
13106C	*MASSE*	**415001**!
1311035	*WOOL*	**415379**!

! Industrial Size/Type * Minor Width Difference

= The U.S. customer service number is 877-4-TIMKEN. The Canadian customer service numbers are 800-565-4927 (English) and 800-565-0438 (French-Canadian).

Mfr. No.	Name	Zero Duplication or Recommended Industrial
1311035	*WOOL*	**415379**
13111	*C-R*	**473212**!
131116	*C-R*	**415076***
13111C	*MASSE*	**415085**!
13111C	*MASSE*	456648
13112	*C-R*	**473212**!
131201	*EMSCO*	**473205**
131203SB	*TRSCM*	**472826**!
131203TB	*TRSCM*	**472826**!
131206	*EMSCO*	**473473**
13121	*CHRYS*	3173
131210	*EMSCO*	417548
131211	*EMSCO*	**417082**
131213TB	*TRSCM*	**473211**!
131223SB	*TRSCM*	**473212**!
131274R91	*IH*	**415991**
131274R91	*IH*	455146!
131280	*EMSCO*	**417354**!
131281	*EMSCO*	**417354**!
1312866	*CLARK*	40520S
131287	*UNIVE*	**450474***
131299	*UNIVE*	50528
1312RC	*SUL*	**418028**
1312RC	*SUL*	455137!
131308H	*IH*	**471103**!
13135LPD	*JN-MN*	**481537**
13140	*C-R*	**473212**!
13143	*DIA*	6090S
13143	*EATON*	6090S
131484R91	*IH*	**417484**!
131526	*SPERY*	**415960**
1315476	*CHRYS*	5406
13157	*C-R*	40769S
131575	*HOUGH*	**471224**!
131575H1	*HOUGH*	**471224**!
13158	*C-R*	40769S
13159	*C-R*	40769S
13160LPD	*JN-MN*	90X120X12
13163LPD	*JN-MN*	**471526**!
13164	*C-R*	5131
13165	*C-R*	5131
13166E	*JOHND*	204002
1316788	*CHRYS*	**470954**!
13168	*C-R*	5131
1316815	*CHRYS*	411
13169	*C-R*	40769S
131704	*HOUGH*	**471760**
131704H1	*HOUGH*	**471760**
13170X	*MASSE*	**471735**
13171VB	*TRSCM*	340853
13172LDS	*JN-MN*	**416888**!
13173LDS	*JN-MN*	**416156**
13175	*C-R*	40769S
13177B	*MASSE*	450129
13177B	*MASSE*	**472826**!
13178B	*MASSE*	**473225**!
13179	*C-R*	40769S
13182SB	*TRSCM*	**323138**!
13183P	*ITM*	1012
13183P	*ITM*	1012N
13183P	*ITM*	45X62X8!
13183PSL	*TRSCM*	6370N
131872SB	*TRSCM*	**472354**
131872SB	*TRSCM*	484156V!
131872VB	*TRSCM*	**472354**!
131872VB	*TRSCM*	484156V
131872VL	*TRSCM*	**472354**
131872VSB	*TRSCM*	484156V
131873TB	*TRSCM*	**472354**!
131876R91	*IH*	**472394**
13189	*C-R*	**473213**!
1318929	*GMC*	**472164**
1318RC	*SUL*	**415988**
13190	*C-R*	**473213**!
13192TB	*TRSCM*	1987
131932R91	*IH*	**472394**
13193PSB	*TRSCM*	**482163**!
131955PTZ	*TRSCM*	2443
13195F	*IH*	**473225**!
13195G	*IH*	**473225**!
13197	*DIVCO*	340797
131983SA	*TRSCM*	**482163**
1319RC	*SUL*	**415379**
1319RC	*SUL*	**415379**!
132	*C-R*	BS5974
13200	*C-R*	**473213**!
13203SB	*TRSCM*	**472258**
13203TA	*TRSCM*	**472258**
13203TB	*TRSCM*	**472258**!
13203VSB	*TRSCM*	**472258**
13203VTB	*TRSCM*	**472258**
13204004	*TROS*	**471564**
13204405	*TROS*	**471579**
13204804	*TROS*	**471567**!
13204806	*TROS*	**471567**!
13204806.25	*TROS*	**471567**!
13205005	*TROS*	**481568**!
13205205	*TROS*	**474253**
13205206.25	*TROS*	**474253**
1320527	*CHRYS*	12473
13205604	*TROS*	**471570**!
13205606	*TROS*	**471570**!
13205606.25	*TROS*	**471570**!
13206006	*TROS*	**471571**
13206006.25	*TROS*	**471571**
13206205	*TROS*	**472324**!
13206206.25	*TROS*	**451583**!
132062SC	*TRSCM*	6760S
13206305	*TROS*	**472324**!
13206306	*TROS*	**472324**!
13206306.25	*TROS*	**472324**!
132063SB	*TRSCM*	**470774**!
132074	*ROSS*	**472560N**!
1320B	*GOODM*	**473010**!
1320D	*GOODM*	**473234**
1320RC	*SUL*	**416339**
1320RC	*SUL*	455031!
1321	*C-R*	5076
13210	*C-R*	**473213**!
13210004	*TROS*	**471224**!
13210005	*TROS*	**471224**!
13210006	*TROS*	**471224**!
13210006.25	*TROS*	**471224**!
13210008	*TROS*	**471224**!
13210008.5	*TROS*	**471224**!
13210405	*TROS*	**480210**!
13210406	*TROS*	**480210**!
13210406.25	*TROS*	**480210**!
13210408.5	*TROS*	**480210**!
132104X03.5	*TROS*	9376
13210803	*TROS*	340815
13211602	*TROS*	240736
132123TB	*TRSCM*	**471192**
132123VTB	*TRSCM*	**471192**
13213TB	*TRSCM*	**472287**!
13214SA	*TRSCM*	**471192**
13219X	*MASSE*	**471466**!
1322	*C-R*	5089
13220	*C-R*	**473213**!
13221	*C-R*	**473213**!
132214	*SCHWI*	**471763**
132222D	*GARLK*	5124
1322309	*WOOL*	**417621**!
132233SB	*TRSCM*	**484058**
132234SB	*TRSCM*	9161
13223TB	*TRSCM*	**473214**!
13228	*C-R*	353132
132282VB	*TRSCM*	42763!
132282VB	*TRSCM*	50402
132283SP	*TRSCM*	5131
1322D	*GOODM*	**474274**
13232VHY	*TRSCM*	43089S
13233SB	*TRSCM*	**473215**!
13233SB	*TRSCM*	**473215**!
13233TB	*TRSCM*	**473215**!
13234VHY	*TRSCM*	204027
13241LDS	*JN-MN*	**476470**
13242	*C-R*	481834
1324262	*CHRYS*	5414
132435-H-20	*IH*	**470625**!
132435H10	*IH*	**416888**!
13244SA	*TRSCM*	6241S
13246	*C-R*	2300
132563TB	*TRSCM*	**473258**!
132563VTB	*TRSCM*	**473258**
132607A	*HARWA*	13X26X7
1326093	*CHRYS*	5414
132628R91	*IH*	7600S
13265SL	*TRSCM*	**450776**!
132707R91	*IH*	**471466**!
13273SB	*TRSCM*	323125
13275	*C-R*	450147
1328011	*BENDI*	**473227**
13283TB	*TRSCM*	**473197**!
132867H	*IH*	**473010**!
13287LDS	*JN-MN*	**473197**
13292LPD	*JN-MN*	**415187***
1329602	*BENDI*	**471820**
132P3	*WHITE*	45653S
1330	*CALI*	**455005**
133006C1	*IH*	**415984**!
13302	*DIVCO*	**471827**
1330B	*GOODM*	**473010**!
13315LDS	*JN-MN*	**416271**!
13316LDS	*JN-MN*	**472636**!
13316X	*MASSE*	**417344**!
1331RC	*SUL*	**456105**
1332113212	*TROS*	**415076**
133224R91	*IH*	**470954**
13336A	*HERCU*	**473236**!
13339	*DIVCO*	**470898**
1333OS	*JN-MN*	**415045**!*
133456	*HYST*	**471737**
133494R1	*IH*	**415449**
133494R2	*IH*	**415449**
133494R92	*IH*	**415449**
1334OS	*JN-MN*	**417601**
13350	*C-R*	**484054***
133522	*HYST*	J1120=
133523	*HYST*	**455019**!
13353X	*MASSE*	**473367**
13353X	*MASSE*	**473367**!
13355X	*MASSE*	**473225**!
1335716	*GMC*	**472164**
1335RC	*SUL*	**416666**
133607H	*IH*	**474281**!
133675	*JEFF*	**417481**
133800	*C-R*	340X380X20*
13385	*GWI*	**481568**!
133853	*US-EL*	**481443**!
13386F	*OSHKO*	218
133887	*CROSS*	**471354**!
133888	*CROSS*	**474264**
133889	*CROSS*	**474265**
133890	*CROSS*	**472144**!
133891	*CROSS*	**472636**!
133892	*CROSS*	**413478**
133893	*CROSS*	**417159**
13399	*C-R*	6906S
133A	*HYST*	**471224**!
134102	*JEFF*	**471255**!
13414LUP	*JN-MN*	**417349**!
134154	*US-EL*	**471571**
13418	*C-R*	5124
13419	*C-R*	9161
13420	*C-R*	473435
13421	*C-R*	473435*
134213TL	*TRSCM*	473435
13423	*C-R*	223400
134241R91	*IH*	40185
13425	*C-R*	223410
13425	*C-R*	223420
13425	*C-R*	710416
13426	*C-R*	223420
13427	*C-R*	710236
13428	*C-R*	223430
13428	*C-R*	710417
134299	*GOODM*	**471649**!
134299	*JEFF*	**471649**!
13430	*C-R*	34X52X8
13431	*C-R*	34X52X8!
134311	*MIHLE*	455943=
134313	*MIHLE*	**415379**!
134313	*MIHLE*	**415379**
1343260	*GM*	421
13433	*C-R*	34X52X8
13436	*C-R*	473436
13436LPD	*JN-MN*	455129
13437	*C-R*	473436*
13438	*C-R*	34X54X9
134380H1	*HOUGH*	**410308**!
13438LPD	*JN-MN*	471686
13439	*C-R*	710110
134399	*GOODM*	**471649**!
134399	*JEFF*	**471649**!
13441	*C-R*	710110
13442AS	*HERCU*	8370S
13445	*C-R*	34X55X9!*
13445	*C-R*	473812
13448LUP	*JN-MN*	**471472**!
134494	*JEFF*	**415025**
1345-044-003	*WARNR*	**472572**
1345-044-044	*WARNR*	**473237**!
13450	*C-R*	34X56X8
1345044004	*WARNR*	**473237**!
13451	*C-R*	50168
13452	*C-R*	710314
13458LUP	*JN-MN*	**450593**!
134592	*GOODM*	50199S!
134592	*GOODM*	6863S!
134592	*JEFF*	50199S!
134592	*JEFF*	6863S!
1346034	*GMC*	**470774**!
13462	*CHRYS*	**473457**!
13463	*C-R*	34X60X8
134631	*SPICE*	**471466**!
134632	*SPICE*	**473231**
134633	*SPICE*	**471192**
134634	*SPICE*	**471765**!
13466	*C-R*	450054
134661	*SCHWI*	**472015**
13467	*C-R*	450054
134670	*SCHWI*	**472015**=
1346883	*GMC*	**470774**!
13469LPD	*JN-MN*	**481073**
1347-001	*PYUNG*	223420
1347056	*GMC*	331301N
134717	*HYST*	**471231**!

! Industrial Size/Type * Minor Width Difference

= The U.S. customer service number is 877-4-TIMKEN. The Canadian customer service numbers are 800-565-4927 (English) and 800-565-0438 (French-Canadian).

Mfr. No.	Name	Zero Duplication or Recommended Industrial
1347413	GMC	471821!
13475	C-R	223462
13475	C-R	34X62X10!*
13475	C-R	710422
13477E	IH	415001!
13478	C-R	710109
13483	C-R	223462
13483	C-R	34X62X10!
13484	C-R	710151
13491	GARLK	710005
13491	NEWPR	710005
13492	C-R	8594S*
134928R91	IH	471267!
13495	C-R	710250
134989	NRWST	471424!
134FF28	C-R	471267!
13500	C-R	8133S
13508	C-R	8549S*
13511	C-R	484156V
13512	C-R	472354
135127	ALLCH	415371
13516M1	C-R	471549!
13517LDS	JN-MN	473367
13518	C-R	471551
13518LDS	JN-MN	417621!
13519	C-R	471558*
13520	C-R	471255
13521	C-R	481073
13522	C-R	471553!
13523	C-R	50026*
13524	C-R	471554!
13525	C-R	481443!*
135255SP	TRSCM	8594S
13526	C-R	471231!
13527	C-R	2443
13528	C-R	471267!
13529	C-R	340853
1352916	B-L-H	415449!
135292	GOODM	415088!
135292	GOODM	415088
135292	JEFF	415088!
135292	JEFF	415088
13530	C-R	6597S
135308	HOUGH	471224!
13533	C-R	6597S
135330	CROSS	471571
13534	C-R	472354!
13534A	HERCU	416332!
13535	C-R	472354!*
13537	C-R	323138!*
13538	C-R	484156V
13539	C-R	323138!
1353918	GMC	473228
1353919	GMC	473228
1353997	GMC	9613S
13540	C-R	323138!
135402	MINNM	330385
135402	OLIVE	330385
13541	C-R	472354!
13541X	MASSE	472185!
13542	C-R	472354!
13543	C-R	472354!*
13544	C-R	472354!
13544	DIA	5MR71
135442	DIA	5MR71
135443	SCHWI	470530
13545	C-R	472354!
13546	C-R	472354!
13547	C-R	472354!
13548	C-R	472354!
13548	SPERY	411253!
13548A	VICK	411253!
13550	C-R	472354!
13551	C-R	472354!
1355173	CATER	5370
13552	C-R	1987
13553LPD	JN-MN	417344!
13554	C-R	482163!
13554LUP	JN-MN	473016!
13557	C-R	714655!
13559	C-R	472258!
13560	C-R	472258*
13561	C-R	472258
13562	C-R	472258!
13563	C-R	472258*
13564	C-R	472258*
13567	BU-SP	471652
13567	C-R	472258!
13568	C-R	472258!
13569	C-R	472258!
13571	C-R	472258
13571LPD	JN-MN	471424!
13572	C-R	472258
135722	ALLCH	415138!
13573	C-R	40522S
1357370	GMC	8594S
13574	SPICE	473442!
13575	C-R	470774!
13576	C-R	470774!
13577	C-R	470774!
13578	C-R	470774!
13578LDS	JN-MN	471801!
13579	C-R	472258
13579	C-R	472258!
13579LDS	JN-MN	473459
135804	SPERY	482126
135804	VICK	482126
13581	C-R	472258
13581LPD	JN-MN	471137
13582	C-R	470774
13583	C-R	470774!
13585	C-R	470774*
13587	C-R	470774!
13587LPD	JN-MN	471870!
13588	C-R	470774
1358899	GMC	9613S
135897	GOODM	417020
135897	JEFF	417020
13590	C-R	470774!
13591	C-R	470774!
1359176	GMC	473179
13592	C-R	470774
13593	C-R	470774
13594	C-R	470774!
1359496	WHITE	416288!
13595	C-R	470774!
135955	NEHO	472164!
13595LDS	JN-MN	417546!
13595X	MASSE	471224!
13596	C-R	6760S
13598	C-R	51322*
13599	C-R	472287!
135999	HOUGH	415371
135999H1	HOUGH	415371
135999H1	IH	415371
135FF28	C-R	471267!
135X160X12	SIMRT	135X160X12
135X160X13SC	TRSCM	135X160X13
135X160X13TC	TRSCM	135X160X13
135X170X12SC	TRSCM	135X170X12
135X170X12TC	TRSCM	135X170X12
13600	C-R	472287!
136002	HOUGH	472409!
136002H1	HOUGH	472409!
136002H1	IH	472409!
13602	C-R	472287!
13603	C-R	472287!
13604	BU-SP	415645!
13604	BU-SP	455104
13607	C-R	470774
136088	GOODM	471645
1361	ALOY	224045
13610004	TROS	471270!
13610006	TROS	471270!
13610406	TROS	450188
13610804	TROS	472560N!
13610805	TROS	472560N!
13610806	TROS	472560N!
13618	C-R	471551
13618	MALL	480210!
13618M1	C-R	471551
13619	C-R	471558*
13620	C-R	471255
136203SB	TRSCM	51322
136206	GOODM	415938
136206	JEFF	415150!
13620M1	C-R	471255
13621	C-R	481073*
13622	C-R	471553!
13623	C-R	50026*
136233H2	IH	417597
136234SB	TRSCM	9568
1362360	GMC	8620N
1362377	GMC	8594S
13624	C-R	471554!
13625	C-R	481443!*
13626	C-R	471231!
136277	HOUGH	417316!
136277H1	HOUGH	417316!
13628	C-R	471267!*
13630	C-R	472287!
13631	C-R	472287!
13632	C-R	472287!
1363206	GMC	8594S
13633	C-R	472287!*
13634	C-R	472287!
13637	KEN	415656
136376	SPERY	204029
136376	SPERY	204507!
136393	US-EL	470625!
13641	C-R	472287!
13642	C-R	471192
13645	C-R	471192
13647	C-R	471192
136478	US-EL	416664!
13647LPD	JN-MN	471729
13648	C-R	471192
13649	C-R	471192
13650	C-R	471192
13652	C-R	471192
136535	WEBER	415303!
13654	C-R	471192
136540	WEBER	450446
13655	C-R	471192
13657	C-R	471192
13658	C-R	471192
1366	MURPH	473228
13660	C-R	471192
13662	C-R	471192
13664	C-R	471192
13665	C-R	471192
13666	C-R	471192
13668	C-R	3543
136699	HOUGH	417967!
13670	C-R	471192
136702	HOUGH	417546!
136702H1	IH	472439
13671	C-R	473214!
13672	C-R	473214!
13672	CHRYS	3173
13672	GARLK	3173
1367260	OSHKO	415938
136734	HOUGH	455330!
136734H1	IH	455330!
136735	HOUGH	473238
136735H1	IH	473238
136735H2	HOUGH	473238
13673LPD	JN-MN	471689!
13674	IH	455330!
13676	C-R	473214!
13676	C-R	5204
136762R1	IH	473367
136762R1	IH	473367!
136763R1	IH	50075=
136771	SPERY	322353
136771	SPERY	474278!
13678	C-R	473214
13679	C-R	473214
13680	C-R	473214!
1368068	GMC	331301N
13682	C-R	473214!
13684	C-R	473214!
13685	C-R	2655
13686	C-R	40169S
13687	C-R	473214!
136879	CUMMI	416271!
13688	C-R	4614N
13689	C-R	40169S
136899H2	IH	472492!
13690	C-R	473214
13690A	C-R	472179
13692	C-R	473214
13693	C-R	473214
136957R91	IH	340771
13696	C-R	473214
13696A	HEIL	417267
13696A	HERCU	417267
13698	C-R	473214!
13699	C-R	473214
136A10804	TROS	472560N!
136GH28	C-R	471267
136Z24	C-R	471554!
137	IG-RA	455480!
13700	C-R	9569S
1370084020	COLLS	330385!
1370085020	COLLS	416271!
1370085030	COLLS	471413!
1370085040	COLLS	471272!
1370085050	COLLS	450457
1370085060	COLLS	473224!
1370085070	COLLS	472015!
1370090010	COLLS	471760
13702	C-R	50402
13704204	TROS	481397
13704206	TROS	481397
13704804	TROS	471498
13705	C-R	42763
13705604	TROS	471633!
137060H	IH	471141!
13706307	TROS	450908=
137068	US-EL	470898
13708	C-R	42763
13710	C-R	42763*
13710	DIA	471689!
13710204	TROS	471076
13711	C-R	204027
13713	C-R	473215!
137136	HOUGH	410737!

! Industrial Size/Type * Minor Width Difference

= The U.S. customer service number is 877-4-TIMKEN. The Canadian customer service numbers are 800-565-4927 (English) and 800-565-0438 (French-Canadian).

Mfr. No.	Name	Zero Duplication or Recommended Industrial
13714	C-R	**473215**!
13716	C-R	**471549**!
1371622	GMC	8994N=
13716M1	C-R	**471549**!
137174	HYST	**417269**!
13718	C-R	**471551**
13718M1	C-R	**471551**
13719	C-R	**471558**
13719	FAIRB	**471558**
13720	C-R	**471255**
13720	FAIRB	**471255**!
13720M1	C-R	**471255**
13721	C-R	**481073***
13721	LEROI	**481073**
13722	C-R	**471553**!
13722B	C-R	**471553**!
13722M1	C-R	**471553**!
13723	C-R	50026
137231C1	IH	204038
137235SP	TRSCM	8549S
13724	C-R	**471554**!
13724	FAIRB	**471554**!
13724	IH	**471554**!
13724M1	C-R	**471554**!
13725	C-R	**481443**!
137253R91	IH	**471103**!
13726	C-R	**471231**!
13726M1	C-R	**471231**!
13727	C-R	**473215**!*
137272R91	IH	**470004**!
13728	C-R	**471267**!*
13728	STEEL	450398
13728	STEEL	**471267**!
13728M1	C-R	**471267**
13729X	MASSE	**471750**!
13730	C-R	**473215**!
1373030	GMC	**473179**
13732	SPICE	**412119**!
13732A	HEIL	**471255**!
13732A	HERCU	**471255**!
13734	C-R	**473215**=
13736	C-R	**473215**!
13737	C-R	**473215**!
13738	C-R	**473215**!
13738	C-R	9568
137381	GMC	**415991**
13739	C-R	**473215**!
13740	C-R	**473215**!*
13743	C-R	**473215**!*
1374709	CHRYS	9116S
1374709	GMC	9116S
13748X	MASSE	**410102**
13750	C-R	3543
13752	C-R	**473215**!*
13753	C-R	43089S*
137547	NEHO	**473231**!
13755	C-R	43089S
1375660	C-R	41081S=
13757	C-R	710249
13758	C-R	43089S
13759	C-R	223520!
137592	US-EL	**471647**
1376	CHEL	**471763**
1376030	OSHKO	**415991**!
1376030	OSHKO	**415991**
137624	FMC	**471554**
13764	C-R	**473215**!
13765	C-R	9568*
13766	C-R	**473215**!
13767	C-R	**473215**!
1376776	GMC	9116S
1376778	GMC	9116S
13768LUP	JN-MN	**417481**
13769	C-R	**473215**!*
13770LUP	JN-MN	**415150**!
13772LPD	JN-MN	**415058**
13773LDS	JN-MN	**453182**
13774	C-R	470950!
13774	C-R	6241S
13775	C-R	470950!
13775	C-R	6241S
13778SS	JN-MN	**471442**!
13781	C-R	**473367**
137816H	IH	50327
13786	C-R	470950!
13786	C-R	6241S
13787	C-R	6241S*
13789LUP	JN-MN	**415128**
13790	C-R	6241S
137902H1	HOUGH	**417134**
13792	C-R	223550
1379246	GMC	5591$
13793	C-R	6241S
13794	C-R	223801
137945H1	HOUGH	**471413**
13796	C-R	6241S
13797	C-R	6241S
13799	C-R	470950!
13799	C-R	6241S
137A28	C-R	**471267**
137G28	C-R	**471267**!
137HD28	C-R	**471267**!
137HD28-Q6	C-R	**471267**!
137Z20	C-R	**471255**
138	C-R	5596=
13800	CASE	6590S
13802	C-R	470950!
13802	C-R	6241S
13804	C-R	470950!
13804	C-R	6241S
13804LPD	JN-MN	**453182**
138053	ALLCH	**415007**
13807	C-R	715101
138088	JEFF	**471645**
13809LUP	JN-MN	55078S
1380A3	WHITE	**472157**
1381	SKIL	472951
1381	SKIL	**474252**
13810	C-R	**471276***
13811	C-R	**471276**
13812	C-R	**471276***
138120	HYST	**472258**!
13815	C-R	**471276**
13816LPD	JN-MN	**455297**
13819	C-R	**450776**!
13820	C-R	**471255**
13824X	MASSE	470059
13824X	MASSE	**470380**!
13826	C-R	**473215**!
13829	JOHND	**473473**
13830	C-R	6241S*
13831E	JOHND	**415035**!
13831E	JOHND	**415035**
138374H1	HOUGH	417535
13839	C-R	7687S
138396H2	IH	2505
13841	C-R	**471835**!
13843	C-R	6952S=
13844	C-R	7245
13845	C-R	710178
13845662	JOY	**415138**!
13846	C-R	**471835**!
13847	C-R	**471835**!
1384746	GMC	**473179**
13849	C-R	1147
13850	C-R	710111
13851171	JOY	**473210**
13851172	JOY	**416294**!
13851173	JOY	**415937**!
13851174	JOY	**415035**
13851175	JOY	**415138**!
13851176	JOY	**455576**!
13851177	JOY	**417362**!
13852LDS	JN-MN	**472179**
13853	C-R	4613N
13857	C-R	1987
13857	C-R	710178*
138572	SCHWI	**473016**=
13858	C-R	710138
13858LDS	JN-MN	**415483**
13860	C-R	35X50X8!*
13860	C-R	710324*
13861	C-R	223540
13861	C-R	35X55X8!
13862	C-R	7245
1386231	GMC	9613S
13863	C-R	35X80X8
13865	C-R	**471835**!*
13866	C-R	**471835**!
13867	C-R	471835V*
13868	C-R	35X65X10!
13869	C-R	**473214**
1387134	GMC	5591
13872	KEN	**415001**!
13873	C-R	**473258**!
13875	C-R	**473258**!
13876	BU-SP	**417247**!
13876	C-R	**473258**!
13877	C-R	8168=
13878	C-R	**473258**
1387893	GMC	9913
13879	C-R	**472843**
1387919	GMC	9911S
1387920	GMC	9911S
1387OS	JN-MN	**412027***
13880	C-R	**472843**
138802C1	IH	J1125
138803C1	IH	**415389**
13881	C-R	**472843**
13883	C-R	40504S=
13884	C-R	320249
13884	C-R	714436
13885	C-R	223520
13885	C-R	35X50X8!
13885	C-R	710324*
13887	C-R	223520!
13888	C-R	4529N
13889	C-R	**450776**!
13892	C-R	**450776**!
13893	C-R	223542
13893	C-R	35X55X11!
13894	C-R	223550
13895	C-R	35X65X10!
13895	C-R	710335
13896	C-R	35X72X10
13896	HYST	**474265**
13896	KEN	**415437**
13897	C-R	710217
13899	C-R	**450456**!
13899	HOUGH	**417316**!
13899	PUL	**412119**!
138HMS28-Y12	C-R	**471267**!
13900	C-R	**450456**!*
1390321	CHRYS	**410987**!
13904	C-R	450463
13905	C-R	450463
13905	GARLK	**472572**
13905	NEWPR	**472572**
13906	C-R	450463
13907	C-R	223520*
13908	HOUGH	**416107**!
13908	HOUGH	455073
13909	C-R	35X48X8!*
13911	C-R	710076
13914LUP	JN-MN	**471466**!
13916	C-R	**473197**
13917	C-R	**473197**
13918	C-R	**473197**!
13919	C-R	**473197**
13920	C-R	**473197**!
139224TB	TRSCM	8660S
13922LDS	JN-MN	**473450**!
13924A	HERCU	**471341**!
13925	C-R	**473197**
13926	C-R	**473197**
13927	C-R	35X45X7
13928	C-R	1140*
13928	C-R	35X68X10!
13929	C-R	**471105**
13930	C-R	3655
13931	C-R	1215
13931	C-R	1215N
13932A	C-R	**472185**!
13933	C-R	223520
13933	C-R	35X50X7!
13934	C-R	**450492**
13935	C-R	450516
13936	C-R	450516
13937	C-R	470989
139371	US-EL	**473235**!
13938	C-R	223510
13938	C-R	35X47X7!
13939	C-R	1172
13940	C-R	450516
13941	C-R	35X48X8!
13941	C-R	710051
13942	C-R	1108
13942	NEWPR	9449
139422	HYST	200856
139425	HYST	JV1181
13943	C-R	3771
13944	C-R	223520
13944	C-R	35X50X8!
13945	C-R	223510
13946	C-R	713771
13947	C-R	3655
13948	C-R	223535
13948	C-R	35X52X7!
13949	C-R	223535
139499	HYST	**476470**
13950	C-R	223555
13950	C-R	35X64X8!
13951	C-R	223535
13951	C-R	35X52X8!
13952	C-R	1119
13952	C-R	35X54X8!
13952	C-R	710331
13953	C-R	4040N
13954	C-R	223542*
13954	C-R	35X55X11!*
13954	C-R	35X55X8!
13954	C-R	473823
13954LPD	JN-MN	**417486**
13955	C-R	9344S
13956	C-R	8676S
139560	JEFF	**416865**!
139561	GOODM	55030
139561	JEFF	55030

! Industrial Size/Type * Minor Width Difference $ F-M Number Is Part Of A Kit
= The U.S. customer service number is 877-4-TIMKEN. The Canadian customer service numbers are 800-565-4927 (English) and 800-565-0438 (French-Canadian).

Mfr. No.	Name	Zero Duplication or Recommended Industrial
13957	C-R	710331
13959	C-R	710096
13959	MASSE	**471224**!
13959A	HERCU	**471264**
13960	C-R	35X55X8!
13961	C-R	223543
13961	C-R	35X56X10!
13961	C-R	35X56X8
13962	C-R	2007N
13963	C-R	223540
13964	C-R	35X58X10
13965	C-R	223550
13965	C-R	35X58X10!
13966	C-R	4901
13967	C-R	223551
13967	C-R	35X60X10!
13967	C-R	710424
13969	C-R	223553
13969	C-R	4901
13969	HYST	**474265**
13969A	C-R	**471267**!
13970	C-R	35X62X7!
13970A	C-R	**472560N**!
13971	C-R	1173
13972	C-R	223555
13972	C-R	35X64X8!
13973	C-R	35X65X10!
13973	C-R	35X65X8
13973	C-R	710335*
13974	C-R	223580
13975	C-R	35X69X8!
13975A	C-R	6312
13976	C-R	223580
13977	C-R	35X70X8
13978	C-R	1173*
13979	C-R	35X72X10*
13979	C-R	35X72X8!
139790	SCHWI	**470625**!
13979SSW	JN-MN	200322
13980	C-R	35X72X10*
13980	C-R	35X72X8!
13981	C-R	1147
139822	HYST	340827
13984	C-R	35X78X8
13985	C-R	3214
139852	HYST	340847
13986	C-R	35X80X8
139864H1	IH	**417316**=
139866	GOODM	**471766**!
139866	JEFF	**471766**!
13987	C-R	223520!*
13987	C-R	713771*
13988	C-R	470672
139885	JEFF	**417349**
139885	SUL	**417349**
139886	JEFF	**471766**!
139888	JEFF	**415867**
13989	C-R	1170
13989	C-R	35X52X8!*
13990	C-R	8660S
13991	C-R	8660S
13992	C-R	8660S
139924	US-EL	**415074**
139927	US-EL	**415074**
13993	C-R	35X55X8!
13993	C-R	473823
13994	C-R	223543!
13994LPD	JN-MN	25X52X7!
13995	C-R	8660S
13996	C-R	223552
13997	C-R	35X62X7!*
13998	C-R	223552
13998F	OSHKO	**415035**!
13999	C-R	35X72X10!
139HMS28-Y12	C-R	**471267**!
13D17	TLSMI	**417158**=
13D18	TLSMI	415200N=
13D19	TLSMI	**416624**
13D20	TLSMI	**455576**=
13D21	TLSMI	**416364**=
13X26X7	FORSH	13X26X7
13X26X7	SIMRT	13X26X7
13X26X7SC	TRSCM	13X26X7
13X26X7TC	TRSCM	13X26X7
13X30X7SC	TRSCM	13X30X7
13X30X7TC	TRSCM	13X30X7
14	BL-KN	**471787**!
14000	C-R	35X72X10!*
140000	SPG	712115
140001	SPG	712114
140003	SPG	712118
140004	SPG	712119
140006	SPG	712116
140007	SCHWI	**471689**!
140009	SPG	**471466**
14001	C-R	710201
140011	SPG	**415449**
140012	SPG	712109
140015	SPG	712112
140016	SPG	712113
140018	SPG	712122
140019	SPG	712101
14001933	LF-PT	**471829**
14002	C-R	710166
140020	SPG	712126
140021	SPG	712102
140024	SPG	712120
14002LDS	JN-MN	453066
14002LDS	JN-MN	**470898**!
14003	C-R	35X47X7V
14003414	GMC	8871
14003417	GMC	8835S
14004	C-R	710343
14004804	TROS	**471643**!
14004805	TROS	**471643**!
14005	C-R	223601
14005	C-R	36X47X7!
14005003	TROS	**481644**
14005005	TROS	**481644**
14005604	TROS	**471646**!
14005605	TROS	**471646**!
14005607	TROS	**471646**!
14006	C-R	2007N
14006	C-R	223543!*
14006	C-R	710396
14006004	TROS	**471647**
14006005	TROS	**471647**
140061	SPG	6241S
14007	C-R	710218
14007	C-R	710315*
14008	C-R	223602
14009	C-R	223605
14009	C-R	36X50X7!
14009	C-R	710341*
14009612	GMC	710385
14010	C-R	223605
14010	C-R	36X50X7!
140100	SCHWI	**471787**=
14010004	TROS	**471649**!
14010005	TROS	**471649**!
14010007	TROS	**471649**!
14010804.5	TROS	**471652**
14010805	TROS	**471652**
14011	C-R	223605
14012694	GMC	3896
14012754	GMC	3747
14012967	GMC	710044
14013	C-R	223608!*
14013	C-R	36X52X7
1401335	CHRYS	5414
1401336	CHRYS	5414
14015	DGASK	3655
14015	HYST	340356
14016	C-R	223608*
14016	C-R	36X52X7!
1401691	BUC-E	**472354**!
14017	C-R	223608
14018	C-R	223553
14018	C-R	4901*
14018012A	HARWA	140X180X18
14018399	GMC	3348
14018STLPD	JN-MN	**415227**!
14019LUP	JN-MN	**472299**
14020	C-R	710197!
14021	C-R	2003N
14021	C-R	223540
14021077	GMC	5697
140227	GOODM	**410825**
140227	JEFF	**472394**
140228	JEFF	**410825**
14023	C-R	36X54X7.5
14023	C-R	36X54X8
140233	GOODM	**470625**!
140236	ALLCH	**415196**!
14024	C-R	223610
14024	C-R	710197
1402443	CHRYS	6241S
1402618	CHRYS	6636S
14027	C-R	710331
14028	C-R	710197
14028	C-R	710199
14028939	GMC	5576
14029097	FAIRB	411
14030	C-R	2003N!
1403023	FMC	**415007**
1403023	FORD	**415007**
1403031	FMC	**411253**!
14031	C-R	50126
14032	C-R	1940
14033199	GMC	9845
140337	FORD	**473010**!
14034495	GMC	2440
14035	C-R	474127
140359R91	IH	**410496**!
14037	C-R	36X56X10
14038	C-R	36X56X10!
14039	C-R	36X58X12!*
14039577	GMC	223255
14039577	GMC	32X52X7!
14039587	GMC	8611N
14040	C-R	36X58X12!*
14040	C-R	36X58X8!
14040	C-R	474288
140408	ALLCH	**470530**!
140420	ALLCH	**415001**!
14042LPD	JN-MN	**416664**!
14043	C-R	36X58X12!*
14044	C-R	36X58X12!
14045	C-R	1965
14045	C-R	36X60X7!
14046	C-R	1965
14046941	GMC	710171
14046972	CHRYS	5698
14046972	GMC	5698
140471	HYST	**415725**=
14047298	GMC	3747
14050	C-R	36X62X7!
14050	C-R	481826*
14050	C-R	4989
14052	C-R	36X62X7!
14052	C-R	4989*
14052	C-R	710209
14053338	GMC	9613S
14054	C-R	710152
14055	C-R	710057
14057	C-R	710057*
140574	JEFF	**412473**!
14058LUP	JN-MN	**471224**!
14059	DGASK	3774
14059	DGASK	TCS45472
14061	DGASK	3774
14061	DGASK	TCS45473
14062X	MASSE	**470954**!
14065	C-R	223620
14066982	GMC	5697
14066E	MASSE	**474278**!
140688	CUMMI	**470530**!
14069068	GMC	5433
14069889	GMC	5210
14070	C-R	36X70X8
1407167	CHRYS	**471564**
14071721	GMC	710046
14074	C-R	50254=
14074 4	US-EL	**416077**
14074833	GMC	4795V
14075	C-R	50254=
14076995	GMC	5699
14077041	GMC	8610
140771	SPG	340771
14077244	GMC	4307V!
1407752	CHRYS	6597S
14079089	GMC	9316
140791	HOUGH	**471224**!
14079359	GMC	5072
14079467	GMC	3543
1408142	CHRYS	**473367**
1408142	CHRYS	**473367**!
1408143	CHRYS	**470898**!
14081702	GMC	5210
14081761	GMC	331210V
14081761	GMC	5210
14082	C-R	36X72X8
14083	WOODB	**471424**!
14084118	GMC	5697
14084119	GMC	5698
14084120	GMC	5699
14085829	GMC	4307V!
14086700	GMC	5697
14087	C-R	4532N
1408732	CHRYS	**470954**
140878H2	HOUGH	331356=
14088	C-R	9116S
14088556	GMC	4359V
14088556	GMC	5274
14088559	GMC	4359V
140896	CUMMI	**472164**=
14090906	GMC	9845
14091	DGASK	3771
14091422	GMC	**473227**
14092	C-R	9342S
14092820	GMC	3667
14092900	GMC	2003N!
14095609	GMC	3173
14095609	GMC	710928
14095610	GMC	**472572**
14095611	GMC	341022
14096051	GMC	4359V
14096052	GMC	4359V

! Industrial Size/Type * Minor Width Difference

= The U.S. customer service number is 877-4-TIMKEN. The Canadian customer service numbers are 800-565-4927 (English) and 800-565-0438 (French-Canadian).

Mfr. No.	Name	Zero Duplication or Recommended Industrial
14096077	GMC	3517V=
1409902	CHRYS	6966S
140A10804	TROS	**471652**
140B04804	TROS	**471643!**
140B10804	TROS	**471652**
140X160X13AN	ISP	140X160X12
140X160X13SC	TRSCM	140X160X13!
140X160X13TC	TRSCM	140X160X13!
140X170X12ASN	ISP	140X170X12
140X170X12ASN(32)	ISP	140X170X12
140X170X15SC	TRSCM	140X170X15!
140X170X15TC	TRSCM	140X170X15!
140X180X12AN	ISP	140X180X12
140X180X12AN(35)	ISP	140X180X12
140X180X18	SIMRT	140X180X18
140X180X18SC	TRSCM	140X180X18
140X180X18TC	TRSCM	140X180X18
141	C-R	5453
141	FMC	**415995!**
14100	MICH	50199S!
14100	MICH	6863S!
14100	UNIVE	50199S!
14100	UNIVE	6863S!
14101	BENDI	**471466!**
14101	WOODB	**417362!**
1411035	WOOL	**472164!**
141113	HYST	**415725=**
141119	HYST	**417605**
14112	MICH	**474277**
14112	UNIVE	**474277**
141149	HYST	**417605**
14115134	CONTI	50445
14115A	MASSE	**471651**
1412185	GMC	**473212!**
141263SB	TRSCM	9342S
141276H	IH	415137!
141276H	IH	**418028**
14128LDS	JN-MN	**455584**
141309H	IH	50631
141322	FORD	**471762!**
14136	SPICE	**473228**
1413635	GMC	**473179!**
14141	C-R	50075=
141507	ALLCH	**415035**
141507	ALLCH	**415035!**
14151	HYST	**473467**
141515HA	IH	**323138!**
141515HB	IH	**323138!**
141516HA	IH	340400
141516HB	IH	340400
14154LPD	JN-MN	**472924!**
141576	GMC	**473228!**
1415976	MASSE	**473228!**
141614R91	IH	**457291**
141671	HYST	**417603!**
14169A	C-R	**473464!**
14169A	C-R	**473464**
14171	HYST	**472560N!**
141739	CUMMI	340797
141743	CUMMI	**417621**
141743	CUMMI	5509
141818	ALLCH	**471766!**
14182FX	OSHKO	322353
14182FX	OSHKO	**474278!**
14182X	MASSE	240119
14188	WITTE	**416273!**
1418889	GMC	450274
14191	CASE	J1105
1419512	GMC	6064
14198LUP	JN-MN	**417602!**
14202	DGASK	223420
14202	DGASK	TCS45603
14205	CASE	**473454**
14209	C-R	340930
1420D	GOODM	**472164!**
14212	C-R	3394
14213TB	TRSCM	**473224!**
14214	C-R	**3395!**
14216	BTM	6074
142161	JEFF	**471570!**
14218	C-R	**473224!**
14218521020	ALLCH	**417481**
14219	C-R	**473224!**
14220	C-R	**473224!**
14221	C-R	**473224!**
14222	C-R	**473224!**
14223	C-R	**473224!**
14223	SPICE	5778
142234	SPICE	5778
14223TB	TRSCM	**473016!**
14229	C-R	**473016!**
1422C	GOODM	**472179**
1422D	GOODM	**472179**
14230	C-R	**473016!**
142308	GABR	**471344**
14231HA	IH	**472560N!**
142329H	IH	**474278!**
142329HA	IH	340356
142331H	IH	**472560N!**
142331HA	IH	**472560N!**
142333HA	IH	**474276!**
142333HB	IH	**474276!**
14233TB	TRSCM	**473225!**
1423404	GMC	**473238**
14237LPD	JN-MN	455024
1423RC	SUL	**417172**
14241A	C-R	**416738!**
14241A	C-R	450096
14242	C-R	**473016!**
1424334A	AUTSP	**474276!**
14243SB	TRSCM	**474264!**
14246	C-R	**473016**
14247	C-R	**473016!**
14247	DGASK	3476
14249	C-R	**473016!**
1424B	GOODM	**471984**
1424D	GOODM	**473313**
14250	C-R	**473016!**
142505A	HARWA	14X25X5
14251	DGASK	TCS45108
14252	C-R	**473016!***
14253SB	TRSCM	**473226**
1425501	AUTSP	**481163!**
14256	DGASK	3476
14257	DGASK	TCS45718
14259	DGASK	TCS45719
142598	CUMMI	**417316**
142599	CUMMI	476122H=
14261	C-R	**473016!**
14262	C-R	**473016!**
142657	AUTOZ	K16300
142658	AUTOZ	K16301
14270	WHITE	**415023**
142708R91	IH	**410737!**
14271	DGASK	TCS45506
14271LPD	JN-MN	**418028**
14272	DGASK	6936S
14272	DGASK	TCS45285
14278	DGASK	TCS45483
14281	DGASK	4040N
14281	DGASK	TCS45700
14282	C-R	**473225!**
14282	DGASK	713655
14282	DGASK	TCS45699
14283	C-R	**473225!**
14286A	C-R	**450593!**
14287	DGASK	320595
142917	US-EL	**417258**
14293	DGASK	320595
14295	C-R	**473225!**
14296	C-R	**473225!**
142981	US-EL	**471868**
142C799	WABCO	**470806**
142K1	WHITE	**323138!**
143007A	HARWA	14X30X7
14301A	HERCU	**473228**
14302	DGASK	TCS45724
14302	SPICE	**472924!**
143040	HYST	**415498**
14306	DGASK	TCS45483
14308	BU-SP	**412943**
14309	DGASK	TCS45786
1431	C-R	**472311!**
14310A	C-R	**472924!**
14311	DGASK	TCS45635
14312A	C-R	**412871!**
14315	C-R	**474264**
14316	C-R	**474264**
14316	DGASK	223420
14316	DGASK	TCS45635
14317C	DIA	**450400**
14317F	DIA	6597S
14318X	MASSE	**415960**
143191VC	TRSCM	340930
1431M1	C-R	**472311!**
143203TB	TRSCM	**3395!**
143203TB	TRSCM	352444
143224	BRCWY	470059
143224	BRCWY	**470380!**
14322X	MASSE	**473212!**
143263TL	TRSCM	473437
143270	WHITE	**415023**
143281	WHITE	**473447**
143305TB	TRSCM	**471405**
14337	EATON	713750
14337	FULLE	713750
14341H	IH	**472397!**
14341LPD	JN-MN	**472826!**
14342	C-R	**474264**
14344	DGASK	TCS45424
14346	C-R	6966S
14347	DGASK	TCS45424
143473	ALLCH	**473205**
14351	HOUGH	441130
143555	JEFF	**456105**
14357	DGASK	TCS45424
143575	US-EL	**472324!**
14359	C-R	6966S
14360	DGASK	TCS45434
14360A	C-R	**416865!**
14362	C-R	**474264**
143620	FWD	**473229**
14363	C-R	**474264***
14363	C-R	**474264!**
14364	C-R	**474264**
143697	JEFF	**472636!**
143699	JEFF	**417316!**
14370	C-R	6966S*
14381	C-R	4795V
14383	C-R	**473226**
14383	DGASK	TCS45725
14384	LEECE	**471750!**
14385	DGASK	TCS45727
14387	C-R	4795V*
143873R91	IH	**451143**
1439	ALOY	**417487**
143926C1	IH	457734
14393	C-R	4795V*
14393	DGASK	1121
14397	HOUGH	**470565!**
143990R91	IH	**416956**
144	C-R	710163
144	C-R	BS5974
144002R91	IH	**472185!**
14404	C-R	473437*
14409	DGASK	TCS45884
1440927	GMC	**473234**
144100	JEFF	**472924!**
144101	JEFF	**473215!**
14410405	TROS	**470606!**
14410406	TROS	**470606!**
14410L	IH	470950!
14410L	IH	6241S
14411205	TROS	470328
14411205	TROS	**481213!**
14411206	TROS	470328
14411206	TROS	**481213!**
144112X07	TROS	**474260**
14411604	TROS	353135
14411604	TROS	**474278!**
14411606	TROS	40185
14412	BU-SP	**416154!**
14412LDS	JN-MN	**473213!**
144139C1	IH	**417698**
14418	DGASK	TCS45860
144229	JEFF	**471391!**
144229	SUL	**471391!**
14423	C-R	**471862***
14423A	C-R	**471466!**
14424	C-R	**471862**
144260H	IH	**470004!**
14427	DGASK	TCS45745
14429	DGASK	TCS45918
144302	ALLCH	**476838!**
14438LPD	JN-MN	416191
14443LDS	JN-MN	**415379**
14443LDS	JN-MN	**415379!**
14444LDS	JN-MN	**415142**
14446	C-R	450808
1445023	BENDI	**472070**
1445062	BENDI	240319
14452	C-R	**412473!**
144557	JEFF	**415196!**
14457	SPICE	450073
14458	C-R	450808*
14458	DGASK	TCS45108
144581	JEFF	**417512**
144657	AM WH	**473234**
14468	C-R	450808
14474	DGASK	TCS45914
14477	C-R	710355
14480	DGASK	TCS45963
14483	DGASK	TCS45725
14484	C-R	239134
144886	JEFF	**417351!**
14489	C-R	37X52X8!
1449	ALLCH	**472394**
14490LDS	JN-MN	**455462**
14491	C-R	**471405**
14493A	C-R	**473234**
14494	C-R	2003N!
14496	C-R	710302
144961	JEFF	**473471**
144963	JEFF	**471272!**
14497	DAVEY	**473228**
14499	BU-SP	**416167!**
144A11604	TROS	353135
144A11604	TROS	**474278!**

! Industrial Size/Type * Minor Width Difference

= The U.S. customer service number is 877-4-TIMKEN. The Canadian customer service numbers are 800-565-4927 (English) and 800-565-0438 (French-Canadian).

Mfr. No.	Name	Zero Duplication or Recommended Industrial
144A11604C	TROS	**474278**!
144A11604C	TROS	6859S
144X160X12SC	TRSCM	144X160X12
144X160X12TC	TRSCM	144X160X12
14500	C-R	710228
145000	SPG	712123
145001	SPG	712124
145014	SPG	712125
14502	C-R	224462
145029	JEFF	**472492**!
145029	SUL	**472924**!
1450316	CHRYS	6636S
14504	BU-SP	**415995**!
14504	KOEH	**415995**!
14506	C-R	710259
145074	JEFF	**412473**!
145103	JEFF	**415371**
145107	JEFF	**415995**!
145108	JEFF	**415371**
145108	SUL	**415371**
14518012A	HARWA	145X180X12
1452	ALOY	1944
145212	JEFF	**471554**!
14528	JNSON	**471271**!
145383	JEFF	**417171**!
145384	JEFF	**415021**
145395	AU-WS	**471735**
1454	ALOY	474134
145416	JEFF	**415072**
145493	JEFF	**471549**!
1455257	GMC	470059
1455257	GMC	**470380**!
14553	SPICE	50075=
14557	SPICE	450073
145585	JEFF	**417191**
145585	JEFF	456585
145588	BRCWY	**415001**!
1456	ALLCH	**472394**
145637	SPG	45637S
145702	JEFF	**415551**
145752	HYST	**471267**!
145753	HYST	**471224**!
14577LPD	JN-MN	224025
145812	HOUGH	**470898**
145812	IH	**470898**
145827H2	IH	**473467**
145847250	MACK	120X150X12
14589	SPICE	40769S
14589SS	JN-MN	222510
14589SS	JN-MN	25X35X7!
14598A	C-R	**476838**!
145X170X12SC	TRSCM	145X170X12
145X170X12TC	TRSCM	145X170X12
145X175X15SC	TRSCM	145X175X15
145X175X15TC	TRSCM	145X175X15
145X180X12	SIMRT	145X180X12
145X180X12SC	TRSCM	145X180X12
145X180X12TC	TRSCM	145X180X12
146-A153	HEIL	**417134**
146-A160	HEIL	**472636**!
146-A306	HEIL	**472018**
146-A322	HEIL	**415196**!
14601	C-R	223750
1461	SUPER	**450084**!
14610LPD	JN-MN	65X90X10!
14613	HEIL	**471224**!
146139	US-EL	**473225**
14614	AMC	**411253**!
146163	BUSHH	204017
14618LDS	JN-MN	**473228**!
14619	HEIL	**412119**!
14619LDS	JN-MN	**472016**!
14620	HEIL	**416476**!
14620LDS	JN-MN	**415449**!
14621LDS	JN-MN	**472185**!
14626	HEIL	**471141**!
146319	HEIL	**476470**
14634	C-R	710414
14634LPD	JN-MN	**415645**!
14635	C-R	710441
146366	TLSMI	**415449**!
14640	C-R	**473438**
14641	C-R	**473438**
14643LPD	JN-MN	226020
14643LPD	JN-MN	60X80X8!
14644LPD	JN-MN	228010
146458	HOUGH	**473448**
146458H1	HOUGH	**473448**
146458H1	IH	**473448**
146482	BRCWY	**415458**!
146483	BRCWY	5M867
14649A	C-R	**471224**!
1464RC	SUL	**418028**
1464RC	SUL	455137!
1465	CHEL	**471529**
1465	SUPER	**473228**
14650	C-R	**473438**
146522	JEFF	**417344**!
146522	SUL	**417344**!
14656	HEIL	50405
14657SS	JN-MN	**472810**!
146583	JEFF	**417349**
1466004	GMC	**473231**!
14661	HEIL	**471442**!
14663	C-R	**473439**!
14666	HEIL	455290
14667	C-R	**473439**!
146672	JEFF	**471553**!
14669STLPD	JN-MN	509503=
146718	BRCWY	5957S
14671STLPD	JN-MN	**417608**
146721	FUNK	**412473**!
14672LPD	JN-MN	**471735**
146741	SPERY	**471224**!
146748	BRCWY	5951
14675	C-R	**473439**!
14676	C-R	**473439**!
1468	ALOY	4250*
1468	HEIL	**476838**!
146855	BRCWY	**416654**!
14694LPD	JN-MN	70X100X13
14695	C-R	223805
14699	HEIL	**472179**
146A33	HEIL	**450593**!
146A34	HEIL	**473215**!
146A345	STN-S	472951
146A345	STN-S	**474252**
146A346	STN-S	**470625**!
146A347	STN-S	**471750**!
146A5	HEIL	**470004**!
146A57	HEIL	**472397**!
146A59	HEIL	**471224**!
146A6	HEIL	**471571**
146A60	HEIL	**471466**!
146A9	HEIL	**471466**!
146A92	HEIL	**472636**!
147	C-R	5476=
1470	SUPER	**416339**
1470	SUPER	455031!
14700	C-R	710304
14701	C-R	38X50X7!
14702	C-R	1128
14703	C-R	223801
14704	C-R	1174
14704	C-R	38X52X8.5!
14705	C-R	1174
14705	C-R	38X52X8.5!
14705	C-R	710309*
14706	C-R	1966
14707	C-R	223801*
14707	C-R	223802*
14708	AIRCO	55155=
14709	C-R	38X52X7
147091	BRCWY	456618
14709A	MASSE	**417493**
14709X	MASSE	**473214**
1471	ALOY	9864S
14710	C-R	239146
14710	C-R	38X54X7!
14711	C-R	1174*
14711	C-R	38X52X8.5!*
14712	C-R	4530
14713	C-R	223802
147148	BRCWY	415060
147148	BRCWY	455060
14715	C-R	38X54X7!
147178	BRCWY	**415697**!
147178	BRCWY	455547
14719	C-R	223830
14720	C-R	223830
14720	C-R	38X55X7!
14721	C-R	223830*
14721	C-R	223831*
14724	C-R	38X56X10V
147242	TLSMI	50266
14725	C-R	38X56X10
14726	C-R	223845*
14726	C-R	38X62X7!*
14727	C-R	38X56X10!
14728E	MASSE	**471442**!
147297	JEFF	**471571**
14730	C-R	223840
14730	C-R	38X58X8!
147305	BRCWY	**473464**!
147305	BRCWY	**473464**
14731	C-R	223840
14732	C-R	223842
14733	C-R	38X62X7!
14738	C-R	1038
1473814	GMC	5113
1473814	GMC	7721!
14739	C-R	223843
1474	ALOY	5698
14740	C-R	223843
14740	C-R	38X60X10!
14740	C-R	38X60X8
14741	C-R	38X60X10V
14742	C-R	38X62X7
14743	C-R	38X62X7
14746	C-R	223843
14746	C-R	38X60X10!
14747	C-R	710139
14748	C-R	1176
14749	C-R	2009
14750	C-R	38X65X8!
14750	C-R	710435
147529	JEFF	**415711**
1475295	GMC	5113
1475295	GMC	7721!
14753	C-R	1175
147537	ALLCH	**473205**
14754	CHAMP	**471281**!
14755	C-R	38X68X10!*
14755	C-R	38X68X8!
14755	C-R	710165
14756	C-R	710509
14758	C-R	1176
14759	C-R	1120
14760	C-R	38X70X10
147600	JEFF	**472144**!
14761	C-R	38X72X10
14762	C-R	350572
147621	JEFF	**472397**!
147622	JEFF	**415187**
14762	SUL	**415187**
14763	C-R	223840
14764	C-R	38X72X10
14764A	C-R	**416339**
14764A	C-R	455031!
14766	C-R	1177
14767	C-R	1177
14767	C-R	38X74X8!
14768	C-R	1177
14769	C-R	38X75X8
14770	C-R	38X78X8
14774	C-R	38X80X8
14775	C-R	1196
14775	C-R	3357
147765	JEFF	**472299**
14779LPD	JN-MN	20X32X7
14780	C-R	8597S
14781LDS	JN-MN	**416664**!
1478432	GMC	8804S=
14785	C-R	38X90X8
14789	C-R	482415
1479	ALOY	224520
14790	C-R	223801!
147908H1	HOUGH	**471466**!
1479396	GMC	**451078**!
14797LDS	JN-MN	**470954**!
14798	EATON	**451143**
14798	FULLE	**451143**
147987	JEFF	**415645**!
147987	JEFF	455104
148004	FUNK	**470625**!
14802	EATON	**417433**=
148036	ALLCH	**471647**
1480393	GMC	5589$
14804	C-R	**253099***
14805004	TROS	471337
14805205	TROS	471686
148057	JEFF	**417343**!
14806LUP	JN-MN	**471442**!
14807	C-R	**253099**!
14808	C-R	**253099**
1481	C-R	**471224**!
14810	C-R	**253099**
14810004	TROS	**471689**!
14810005	TROS	**471689**!
14810007	TROS	**471689**!
14810009	TROS	**471689**!
14810804	TROS	**471692**!
14810805	TROS	**471692**!
14810806	TROS	**471692**!
14810807	TROS	**471692**!
14811	C-R	50209*
14811006	TROS	471707N
14811604	TROS	**471413**!
14811606	TROS	**471413**!
14812	C-R	**480210**!*
14812403	TROS	340853
14813	C-R	**474276**
148150	HYST	**55301S**
148151	HYST	**473467**
14816	C-R	42260S
14817015A	HARWA	148X170X15
1481M1	C-R	**471224**!
14821	C-R	**474276**

! Industrial Size/Type * Minor Width Difference $ F-M Number Is Part Of A Kit
= The U.S. customer service number is 877-4-TIMKEN. The Canadian customer service numbers are 800-565-4927 (English) and 800-565-0438 (French-Canadian).

Mfr. No.	Name	Zero Duplication or Recommended Industrial
14821LDS	*JN-MN*	**415327**
14822	*C-R*	**471579***
148223SB	*TRSCM*	50468
14824	*C-R*	**474276!**
14825	*C-R*	**481568!***
14826	*C-R*	**474253**
14826	*C-R*	**474253!**
14827	*C-R*	473414*
14828	*C-R*	**471570!***
1483	*ALOY*	4148
14830	*C-R*	**471571***
14831	*C-R*	**451583!***
14831LDS	*JN-MN*	**415007**
14832	*C-R*	1126
14832	*C-R*	**474276***
14832STLPD	*JN-MN*	55239=
14833	*C-R*	**474276!**
14836	*C-R*	**474276***
1483758	*CHRYS*	**471827**
14840	*C-R*	443018!
14840	*C-R*	**474276***
148415	*JEFF*	**472164!**
14845	*C-R*	**474276!**
1484523	*CHRYS*	**474278!**
1484523	*CHRYS*	6859S
148456	*ALLCH*	**472012**
1484592	*CHRYS*	340797
1484597	*CHRYS*	240698
14846	*C-R*	**481163!**
14846	*C-R*	6759S
14847	*C-R*	**474276**
1484702	*GMC*	8804S=
14848	*C-R*	1126
14848	*C-R*	3677
14848	*C-R*	41257!
14849	*C-R*	240319
14849LPD	*JN-MN*	**472164!**
14850	*C-R*	240319*
148504	*WEBER*	**416107!**
148504	*WEBER*	455073
14852	*C-R*	**481163!**
14852	*CHAMP*	**417484!**
14852	*DOMIN*	**417484!**
14853	*C-R*	240319*
14854LPD	*JN-MN*	**470774!**
14855	*C-R*	**481163!**
14855	*CHAMP*	**470954=**
14857	*C-R*	240319*
148574H1	*HOUGH*	**471649!**
14858	*C-R*	1174
14858	*C-R*	**472466!**
14859	*C-R*	6759S
14860	*C-R*	**480630**
1486096	*CHRYS*	**471827**
14862	*C-R*	7537S
14863	*C-R*	7537S*
14864	*C-R*	**480630!**
14865	*C-R*	**480630!**
14866	*C-R*	**480630!**
14869	*C-R*	240319!
14870	*C-R*	**480630***
148720	*ALLCH*	**471785!**
14873	*C-R*	**480630**
14875	*C-R*	**473227!**
14876	*C-R*	**473227!**
14877	*C-R*	**473227!**
14878	*C-R*	**473227!***
14879	*CHAMP*	**471442!**
14880	*C-R*	**473227**
14881	*C-R*	**473227**
14882	*C-R*	**473227!**
14884	*C-R*	**473227!**
14885	*C-R*	**473227!**
14885	*CLAYN*	**472924!**
14886	*C-R*	**473227**
14886	*CLAYN*	**470334!**
14887	*C-R*	**473227**
148872HI	*HOUGH*	**474276!**
1488883	*GMC*	9406S
1489	*CHAMP*	**473227!**
1489	*DOMIN*	**473227**
148942	*HOUGH*	**415035**
148942	*HOUGH*	**415035!**
14896	*C-R*	6312
14898	*C-R*	43078S
14898	*CHAMP*	**412119**
148L	*OSHKO*	**472439**
148M1-L	*C-R*	350909
148M1-L	*C-R*	**471224!**
148X170X15	*SIMRT*	148X170X15
148X170X15SC	*TRSCM*	148X170X15
148X170X15TC	*TRSCM*	148X170X15
14900	*DGASK*	16210
14901	*DGASK*	16204
14902	*C-R*	6312
14902	*DGASK*	16200
14903	*C-R*	**480844**
14903	*DGASK*	16201
149030R91	*IH*	100495
149030R91	*IH*	**417349**
14904	*DGASK*	16201
14904LDS	*JN-MN*	**471766!**
14905LDS	*JN-MN*	**472439**
14906	*DGASK*	16213
14907	*C-R*	50468
14907	*DGASK*	16202
14908	*DGASK*	16212
14909	*C-R*	331228H
14909	*DGASK*	16204
1491	*C-R*	**471224!**
14910	*C-R*	**470625!**
14910	*DGASK*	16205
149105	*JEFF*	**471271!**
14911	*C-R*	50209*
14911	*DGASK*	16208
14912	*C-R*	**480210!***
14912	*DGASK*	16206
14913	*C-R*	**470625!**
14913	*DGASK*	16251
14914	*DGASK*	16252
14915	*DGASK*	16253
14915LPD	*JN-MN*	**416666**
14916	*C-R*	340136*
14916	*DGASK*	16254
14917	*DGASK*	16255
14918	*DGASK*	16256
14919	*C-R*	**470625!**
14919	*DGASK*	16257
1491M1	*C-R*	**471224!**
14920	*C-R*	**471564***
14920	*DGASK*	16258
149203TC	*TRSCM*	1174
149206SLX	*MICH*	6312
14921	*DGASK*	16259
14922	*C-R*	**471579***
14922	*DGASK*	16260
14923	*DGASK*	16261
14924	*C-R*	**471567!***
14924	*DGASK*	16262
14925	*C-R*	**481568!***
14925	*DGASK*	16263
14926	*C-R*	**474253!**
14926	*C-R*	**474253**
14926	*DGASK*	16264
14926M1	*C-R*	**474253!**
14926M1	*C-R*	**474253**
14927	*C-R*	473414*
14927	*DGASK*	16265
14928	*C-R*	**471570!***
14928	*DGASK*	16266
14929	*DGASK*	16250
1493	*C-R*	**470625!**
14930	*C-R*	**471571***
14931	*C-R*	**451583!***
14932	*C-R*	**470625!**
14933	*C-R*	**470625!**
149345R91	*IH*	340771
14935	*C-R*	331228H
149375R91	*IH*	**473460**
1493776	*GMC*	5109
1493778	*GMC*	5123
14938	*C-R*	**470625!**
14939	*C-R*	331228H
14939	*C-R*	**470625!**
14939	*C-R*	5115*
14940	*C-R*	331228H
14940	*C-R*	**470625!**
14942	*C-R*	**470625!**
14942	*CHAMP*	**415349=**
14942	*DOMIN*	**415349=**
14943	*C-R*	**470625!**
14944	*C-R*	**470625!**
1494465	*GMC*	9406S
149488	*CUMMI*	472236H=
1495	*ALOY*	3604
14951	*C-R*	**470625!***
14953	*C-R*	**470625!***
149543	*JEFF*	**416664!**
149543	*SUL*	**416664!**
149552	*JEFF*	**417598**
149552	*SUL*	**417598**
14957	*C-R*	340136
14959LPD	*JN-MN*	**415187**
1495M5	*WHITE*	**471570!**
14960	*C-R*	340136
1496010	*SPICE*	42763
1496096	*CHRYS*	**471827**
1496123	*GMC*	2043
1496175	*GMC*	9912
14963	*C-R*	**453065**
14964	*C-R*	**470625!**
14965	*C-R*	**470625!**
149654	*JEFF*	**471750!**
149654	*SUL*	**416892!**
14966	*C-R*	340136
14967L	*IH*	**470088**
14968	*C-R*	9363S
14969	*C-R*	40468
1496910	*SPICE*	42763
1496B	*JN-MN*	**416154!***
1496RC	*SUL*	**417621!**
14970	*C-R*	200859
14970LPD	*JN-MN*	**473244!**
14972	*C-R*	203013*
14974	*C-R*	204013
14975	*C-R*	204013*
14975LPD	*JN-MN*	**472164!***
14978	*C-R*	4370N
14978	*C-R*	7692S
14979	*C-R*	712023
14979	*SPICE*	**473441**
1497OS	*JN-MN*	**416865!***
14980	*C-R*	470059
14980	*C-R*	**470380!**
14980	*DGASK*	16300
14981	*C-R*	470059
14981	*C-R*	**470380!**
14981	*DGASK*	16301
14981LPD	*JN-MN*	**471551!**
14982	*C-R*	5201
14982	*C-R*	5202
14982	*DGASK*	16302
14982A	*C-R*	**415697!**
14982A	*C-R*	455547
14983	*C-R*	472189A!
14983	*C-R*	9613S
14983	*DGASK*	16303
14984	*DGASK*	16306
149848	*FORD*	204017
14985	*DGASK*	16304
14986	*C-R*	**470380!**
14987	*DGASK*	16307
14988	*C-R*	**470380!**
14990	*C-R*	470059
14990	*C-R*	**470380!**
14991	*C-R*	470059
14991	*C-R*	**470380**
14992	*C-R*	**470380!**
14993	*C-R*	410059
14993	*C-R*	**470380!**
14994	*C-R*	**470380**
14995	*C-R*	**470380!***
14998	*C-R*	**470380!**
14999	*C-R*	**470380!***
149ZM1-Y2	*C-R*	**471224!**
14X24X7SC	*TRSCM*	14X24X7!
14X24X7TC	*TRSCM*	14X24X7!
14X25X5	*FORSH*	14X25X5
14X25X5	*SIMRT*	14X25X5
14X25X5SC	*TRSCM*	14X25X5
14X25X5TC	*TRSCM*	14X25X5
14X26X7SC	*TRSCM*	14X26X7
14X26X7TC	*TRSCM*	14X26X7
14X28X6SC	*TRSCM*	14X28X6
14X28X6TC	*TRSCM*	14X28X6
14X30X7	*SIMRT*	14X30X7
14X30X7SC	*TRSCM*	14X30X7
14X30X7TC	*TRSCM*	14X30X7
14X32X7SC	*TRSCM*	14X32X7
14X32X7TC	*TRSCM*	14X32X7
14X35X7SC	*TRSCM*	14X35X7
14X35X7TC	*TRSCM*	14X35X7
15	*WGEAR*	**455134!**
15-00005	*ITM*	228020
15-00009	*ITM*	224560
15-00106	*ITM*	9845
15-00107	*ITM*	3698
15-00108	*ITM*	224052
15-00109	*ITM*	228700
15-00112	*ITM*	1981
15-00120	*ITM*	223220
15-00121	*ITM*	3476
15-00302	*ITM*	**473237!**
15-00303	*ITM*	227235
15-00304	*ITM*	3771
15-00307	*ITM*	224840
15-00308	*ITM*	228005
15-00311	*ITM*	**473237!**
15-00313	*ITM*	223750
15-00315	*ITM*	712001
15-00319	*ITM*	228005
15-00320	*ITM*	222330
15-00321	*ITM*	222820
15-00322	*ITM*	3459
15-00323	*ITM*	228005
15-00324	*ITM*	3655
15-00502	*ITM*	712006
15-00505	*ITM*	223340

! Industrial Size/Type * Minor Width Difference

= The U.S. customer service number is 877-4-TIMKEN. The Canadian customer service numbers are 800-565-4927 (English) and 800-565-0438 (French-Canadian).

Mfr. No.	Name	Zero Duplication or Recommended Industrial
15-00506	*ITM*	228410
15-00507	*ITM*	223602
15-00508	*ITM*	228009
15-00514	*ITM*	224020
15-00518	*ITM*	223420
15-00518	*ITM*	TCS45635
15-00519	*ITM*	224052
15-00520	*ITM*	228410
15-00522	*ITM*	710341
15-00524	*ITM*	224650
15-00525	*ITM*	712010
15-00803	*ITM*	222025!
15-00900	*ITM*	710331
15-00901	*ITM*	3771
15-00902	*ITM*	227410
15-00903	*ITM*	1990
15-00903	*ITM*	TCS45718
15-00905	*ITM*	227610
15-00907	*ITM*	320595
15-00908	*ITM*	710332
15-00910	*ITM*	228009
15-00913	*ITM*	1120
15-00913	*ITM*	TCS45873-1
15-00916	*ITM*	712008
15-00919	*ITM*	711181
15-01000	*ITM*	223802
15-01001	*ITM*	228008
15-01004	*ITM*	711181
15-01009	*ITM*	3771
15-01103	*ITM*	226840
15-01105	*ITM*	227020
15-01106	*ITM*	229005
15-01107	*ITM*	223420
15-01110	*ITM*	8316
15-01112	*ITM*	223012
15-01114	*ITM*	223420
15-01116	*ITM*	3909
15-01119	*ITM*	223012
15-01120	*ITM*	228250
15-01120	*ITM*	710448
15-01123	*ITM*	224840
15-01124	*ITM*	229005
15-01125	*ITM*	224660
15-01126	*ITM*	1940
15-01127	*ITM*	1019
15-01202	*ITM*	222330
15-01301	*ITM*	223831
15-01302	*ITM*	1021V
15-01303	*ITM*	1038
15-01304	*ITM*	1019
15-01305	*ITM*	222340
15-01306	*ITM*	710233
15-01308	*ITM*	223230
15-01311	*ITM*	1038
15-01500	*ITM*	716102
15-01502	*ITM*	227550
15-01505	*ITM*	227045
15-01506	*ITM*	223840
15-01513	*ITM*	223235
15-01514	*ITM*	1987
15-01514	*ITM*	TCS45424
15-01518	*ITM*	1994
15-01520	*ITM*	221820
15-01523	*ITM*	228009
15-01524	*ITM*	1953
15-01526	*ITM*	223802
15-01528	*ITM*	224020
15-01530	*ITM*	223802
15-01532	*ITM*	224205
15-01533	*ITM*	229210
15-01534	*ITM*	231004
15-01536	*ITM*	231004
15-01550	*ITM*	231052
15-01552	*ITM*	710187
15-01901	*ITM*	225020
15-01904	*ITM*	710060
15-01906	*ITM*	712005
15-01908	*ITM*	224205
15-01917	*ITM*	3476
15-01918	*ITM*	226820
15-01937	*ITM*	222340
15-02000	*ITM*	3476
15-02005	*ITM*	710205
15-02007	*ITM*	226020
15-02009	*ITM*	716102
15-02107	*ITM*	3476
15-02300	*ITM*	224461
15-02301	*ITM*	224250
15-02304	*ITM*	223802
15-02305	*ITM*	224250
15-02307	*ITM*	473823
15-02503	*ITM*	3909
15-02902	*ITM*	224520
15-03102	*ITM*	223050
15-03104	*ITM*	710331
15-03313	*ITM*	224840
15-04017	*ITM*	710271
15-04018	*ITM*	223800
15-04302	*ITM*	710056
15-05602	*ITM*	50266
15-05603	*ITM*	**472164**!
15-06101	*ITM*	713771
15-06102	*ITM*	228480
15-06301	*ITM*	224025
15-06303	*ITM*	223035
15-06304	*ITM*	226480
15-06307	*ITM*	494117
15-07801	*ITM*	2955
15-07802	*ITM*	3909
15-08301	*ITM*	1953
15-08307	*ITM*	228010
15-08502	*ITM*	3771
15-08504	*ITM*	222556
15-08506	*ITM*	710302
15-08507	*ITM*	223010
15-08510	*ITM*	223005
15-08511	*ITM*	222267
15-09106	*ITM*	331227H
15-09300	*ITM*	1108
15-09303	*ITM*	229210
15-09306	*ITM*	710190
15-09308	*ITM*	710190
15-09312	*ITM*	321460
15-09313	*ITM*	223601
15-09806	*ITM*	228010
15-09813	*ITM*	227040
15-09815	*ITM*	228010
15-09816	*ITM*	**472439**
15-09830	*ITM*	5108
15-09907	*ITM*	224252
15-09908	*ITM*	227040
15-11505	*ITM*	222025!
15-12301	*ITM*	713655
15-13501	*ITM*	224200
15-20003	*ITM*	224820
15-20006	*ITM*	1992
15-20101	*ITM*	1949
15-20300	*ITM*	225875
15-20301	*ITM*	225010
15-20302	*ITM*	494122
15-20303	*ITM*	474134
15-20501	*ITM*	1188
15-20502	*ITM*	1183
15-20509	*ITM*	2002
15-20510	*ITM*	1985
15-20511	*ITM*	1986
15-20905	*ITM*	1952
15-20906	*ITM*	1952
15-21501	*ITM*	224015
15-21502	*ITM*	1950
15-22303	*ITM*	**472213**
15-22502	*ITM*	1209
15-22703	*ITM*	222510
15-23302	*ITM*	1217
15-23303	*ITM*	1217
15-23304	*ITM*	1165
15-23306	*ITM*	**473455**!
15-24008	*ITM*	224820
15-24009	*ITM*	1090
15-24201	*ITM*	**451948**
15-25603	*ITM*	1110
15-26301	*ITM*	**473230**!
15-29303	*ITM*	482126
15-30010	*ITM*	1974
15-30101	*ITM*	473812
15-30102	*ITM*	**473179**
15-30301	*ITM*	3195
15-30503	*ITM*	710329
15-30506	*ITM*	1977
15-31101	*ITM*	1188
15-31302	*ITM*	224015
15-31504	*ITM*	1956
15-32010	*ITM*	1174
15-32010	*ITM*	224015
15-32303	*ITM*	50501
15-32501	*ITM*	**3395**!
15-32902	*ITM*	1187
15-34011	*ITM*	1960
15-34203	*ITM*	**470898**
15-34203	*ITM*	**473234**!
15-35602	*ITM*	**471870**!
15-35603	*ITM*	**350936**
15-35604	*ITM*	340823
15-35609	*ITM*	710058
15-36303	*ITM*	223535
15-36304	*ITM*	224235
15-36305	*ITM*	40X58X10!
15-39101	*ITM*	224865
15-39307	*ITM*	**473238**!
15-39818	*ITM*	320595
15-40101	*ITM*	474133
15-40509	*ITM*	1167
15-44017	*ITM*	1965
15-45605	*ITM*	**451857**
15-50301	*ITM*	1196
15-50507	*ITM*	1977
15-52301	*ITM*	1974
15-54002	*ITM*	**473234**
15-54019	*ITM*	**473234**!
15-58001	*ITM*	1174
15-59805	*ITM*	50501
15-59807	*ITM*	1994
15-59807	*ITM*	710313
15-59808	*ITM*	222510
15-91402	*ITM*	1962
15-A74	*MINNM*	**476838**!
15-JG17	*KEN*	456744N
15-M22	*SPICE*	472361=
15-M30	*SPICE*	472361=
15-M36	*SPICE*	**471272**!
15000	*C-R*	410059
15000	*C-R*	**470380**!
150001	*SPG*	712104
150003	*SPG*	712103
1500031	*EATON*	473436
150004	*SPG*	712100
15000400	*AJUSA*	12X26X7
15000417	*GMC*	**415072**=
150008	*SPG*	712103
1500080M1	*MASSE*	**412473**!
1500081M1	*MASSE*	**450446**
15001	*C-R*	**470380**!*
15001000	*AJUSA*	221540
1500114	*ITM*	TCS45603
1500115	*ITM*	BS40583
1500122	*ITM*	TCS45681
15001600	*AJUSA*	221710
15001700	*AJUSA*	221720
15002200	*AJUSA*	222025!
15002300	*AJUSA*	222030
15002800	*AJUSA*	222050
15002900	*AJUSA*	20X40X10
15003	*HYST*	**410190**
15003	*SPG*	**415458**!
150030	*HYST*	**410190**
15003200	*AJUSA*	5699
15003600	*AJUSA*	222240
15003700	*AJUSA*	222267
1500381	*FRKLN*	370043A
15004	*C-R*	470059
15004	*C-R*	**470380**!
15004	*NATL*	**417316**!
15004000	*AJUSA*	222340
15004100	*AJUSA*	24X35X7!
15004400	*AJUSA*	222510
1500449	*FRKLN*	**472924**!
150046	*JEFF*	**455191**
15004600	*AJUSA*	324151=
1500474	*FRKLN*	**473237**!
15004800	*AJUSA*	450908=
15004804	*TROS*	**471684**!
15005	*C-R*	**470380**!
1500510	*ITM*	223250
1500510	*ITM*	710415
15005100	*AJUSA*	222556
15005500	*AJUSA*	1990
15005600	*AJUSA*	28X38X7
15006	*SPG*	**417344**!
15006000	*AJUSA*	222820
15006100	*AJUSA*	710325
15006200	*AJUSA*	712008
15006400	*AJUSA*	28X42X8!
15006700	*AJUSA*	222860
15006700	*AJUSA*	2901
15006S	*SPG*	**417344**!
15007	*C-R*	**470380**!
15007500	*AJUSA*	320595
15008	*C-R*	**470380**!
15008000	*AJUSA*	1129
15008100	*AJUSA*	223005
1500811	*ITM*	223551
1500811	*ITM*	710424
15008200	*AJUSA*	223010
15008300	*AJUSA*	5601
1500845	*FRKLN*	8907
15008600	*AJUSA*	223012
15008800	*AJUSA*	1981
15008900	*AJUSA*	223018
15009	*SPG*	**415960**
15009000	*AJUSA*	712001
150092	*WAUKE*	**470625**!
150093	*WAUKE*	**471341**!
15009600	*AJUSA*	223050
15009700	*AJUSA*	**473214**
15009800	*AJUSA*	223035
15009SA	*SPG*	**415960**!
1501	*C-R*	**471224**!
1501	*GOODM*	**471224**!

! Industrial Size/Type * Minor Width Difference

= The U.S. customer service number is 877-4-TIMKEN. The Canadian customer service numbers are 800-565-4927 (English) and 800-565-0438 (French-Canadian).

Mfr. No.	Name	Zero Duplication or Recommended Industrial
1501+2102	*STEM*	370023A
1501+2102	*STEM*	**417505**
1501+320-2102	*STEM*	370023A
1501+320-2102	*STEM*	**417505**
15010000	*AJUSA*	6479
15010100	*AJUSA*	223220
15010300	*AJUSA*	223230
15010400	*AJUSA*	223235
15010500	*AJUSA*	223420
15010600	*AJUSA*	710310
15010700	*AJUSA*	223240
15010800	*AJUSA*	3476
15010900	*AJUSA*	3476
15011	*C-R*	50209
15011000	*AJUSA*	223240
15011700	*AJUSA*	223340
15012	*C-R*	**480210**!
15012000	*AJUSA*	223420
1501214	*FRKLN*	**417278**
1501229	*MASSE*	**473234**
1501229M1	*MASSE*	**473234**
1501230M1	*MASSE*	**471765**!
15012500	*AJUSA*	1172
15012600	*AJUSA*	1108
15012700	*AJUSA*	320249
15012800	*AJUSA*	223602
15012900	*AJUSA*	3771
15013	*C-R*	410059
15013	*C-R*	**470380**!
15013	*SPG*	**415995**!
15013000	*AJUSA*	223520!
1501309	*ITM*	BS40638
15013100	*AJUSA*	710329
15013200	*AJUSA*	3771
15013300	*AJUSA*	3771
15013400	*AJUSA*	710329
15013600	*AJUSA*	3771
15013700	*AJUSA*	3771
15013800	*AJUSA*	223535
15013NA	*SPG*	**415995**!
15013SA	*SPG*	**415995**!
15014000	*AJUSA*	223542
15014000	*AJUSA*	4530
15014100	*AJUSA*	223542
15014200	*AJUSA*	223550
150148	*JEFF*	417498
15015	*C-R*	410059
15015	*C-R*	**470380**!
15015000	*AJUSA*	3394
1501511	*ITM*	BS16192
1501512	*ITM*	TCS45424
15015200	*AJUSA*	223800
15015300	*AJUSA*	223802
15015300	*AJUSA*	7216
15015400	*AJUSA*	1174
15015500	*AJUSA*	1966
1501566	*CHRYS*	6781
150158	*HYST*	**474281**!
15015800	*AJUSA*	223831
15015LPD	*JN-MN*	**415551**
15016	*C-R*	470059
15016	*C-R*	**470380**!
15016100	*AJUSA*	710318
15016200	*AJUSA*	710318
15016600	*AJUSA*	5521
15016800	*AJUSA*	224010
15016900	*AJUSA*	224015
15017	*C-R*	**470380**!
15017000	*AJUSA*	224015
15017200	*AJUSA*	473677
15017400	*AJUSA*	3392
15017500	*AJUSA*	224025
15017600	*AJUSA*	224026
15017800	*AJUSA*	5604
15018	*C-R*	40059S
15018	*NATL*	**476470**
15018100	*AJUSA*	5521
15018200	*AJUSA*	224040
15018300	*AJUSA*	224040
15018800	*AJUSA*	224205
15018900	*AJUSA*	473560N
15018900	*AJUSA*	5613!
15019	*C-R*	410059
15019	*C-R*	**470380**!
15019000	*AJUSA*	224220
1501902	*ITM*	1945
1501902	*ITM*	228480
1501903	*ITM*	1945
1501903	*ITM*	228480
1501909	*ITM*	TCS45633
15019100	*AJUSA*	473560N
150192	*WAUKE*	**473231**!
15019200	*AJUSA*	42X56X7!
15019300	*AJUSA*	224235
1501931M1	*MASSE*	**470354**
150194	*HYST*	**415867**
15019500	*AJUSA*	2000
15019600	*AJUSA*	1953
1501977	*FRKLN*	**415449**!
15019800	*AJUSA*	1953
15019900	*AJUSA*	1953
1501K	*AU-WS*	**471224**!
1501M1	*C-R*	**471224**!
1502	*C-R*	HU036A
1502+2106	*STEM*	370003A
1502+2115	*STEM*	370005A
1502+2162	*STEM*	370006A
1502+320-2106	*STEM*	370003A
1502+320-2106	*STEM*	380003A
1502+320-2115	*STEM*	370005A
1502+320-2162	*STEM*	370006A
15020200	*AJUSA*	224252
150202SC	*TRSCM*	240319
150202SC	*TRSCM*	**481163**
15020300	*AJUSA*	224252
15020400	*AJUSA*	224255
15020500	*AJUSA*	224266
15020600	*AJUSA*	224461
15020700	*AJUSA*	224465
15020LPD	*JN-MN*	472020
1502109	*FRKLN*	370121A
15021100	*AJUSA*	224510
15021200	*AJUSA*	1184
15021300	*AJUSA*	2440
15021400	*AJUSA*	2440
15021500	*AJUSA*	2440
15021600	*AJUSA*	1185
15021700	*AJUSA*	003
15021900	*AJUSA*	224550
15021900	*AJUSA*	5120
15022	*C-R*	**471579**
15022200	*AJUSA*	710289
15022300	*AJUSA*	710289
15022400	*AJUSA*	710289
15022500	*AJUSA*	224560
150225R1	*SELAS*	5115
15022600	*AJUSA*	224560
15022800	*AJUSA*	710289
15023	*SPG*	**415023**
150233SP	*TRSCM*	7692S
15023400	*AJUSA*	1973
15023500	*AJUSA*	716484
15023600	*AJUSA*	1973
15024	*C-R*	**471567**!
15024	*GOODM*	**471567**!
15024000	*AJUSA*	224840
15024100	*AJUSA*	6127
15024100	*AJUSA*	712010
15024200	*AJUSA*	712010
15024300	*AJUSA*	224850
15024800	*AJUSA*	225010
15024900	*AJUSA*	225010
15024LDS	*JN-MN*	**416394**
15025	*C-R*	**481568**!
15025000	*AJUSA*	225020
15025300	*AJUSA*	50X70X10V
1502533M1	*MASSE*	**473238**!
1502534M1	*MASSE*	**472636**!
1502537M1	*MASSE*	**473232**
1502538M1	*MASSE*	**450446**
15025400	*AJUSA*	225035
15025400	*AJUSA*	4401=
15025600	*AJUSA*	225040
150257M1	*MASSE*	**473232**
15026	*C-R*	**474253**!
15026	*C-R*	**474253**
15026200	*AJUSA*	1884
15026200	*AJUSA*	4990
15026300	*AJUSA*	52X69X10
15026400	*AJUSA*	225420
15026500	*AJUSA*	225450
15026700	*AJUSA*	710279
15026800	*AJUSA*	55X70X8!
15026900	*AJUSA*	710279
15026M1	*C-R*	**474253**
15026M1	*C-R*	**474253**!
15026SS	*JN-MN*	50200
15027	*C-R*	473414
15027000	*AJUSA*	225535
1502703	*FRKLN*	**413247**!
1502708	*FRKLN*	**472185**!
15027100	*AJUSA*	225535
15027200	*AJUSA*	225535
15027300	*AJUSA*	225545
15027400	*AJUSA*	55X78X10
15027800	*AJUSA*	**471272**
15028	*C-R*	**471570**!
15028	*FAIRB*	**471570**!
15028	*GOODM*	**471570**!
15028700	*AJUSA*	710271
15028900	*AJUSA*	225880
15029000	*AJUSA*	225880
1502904	*ITM*	BS25031
15029100	*AJUSA*	4408
15029200	*AJUSA*	226020
1502929	*CHRYS*	**410308**!
15029400	*AJUSA*	226020
15029500	*AJUSA*	2001
15029600	*AJUSA*	60X82X12!
1502961	*FRKLN*	**470565**!
15029800	*AJUSA*	**473573**
1502OS	*JN-MN*	**415072***
1503	*C-R*	HU009A
1503+2023	*STEM*	370065A
1503+2173	*STEM*	370107A
1503+320-2023	*STEM*	370065A
1503+320-2023	*STEM*	380065A
15030	*C-R*	**471571**
15030	*GEHL*	**471571**
1503016M2	*MASSE*	**414268**!
1503017M1	*MASSE*	415137!
1503017M1	*MASSE*	**418028**
15030400	*AJUSA*	62X80X10
1503042	*FRKLN*	**417040**
15030900	*AJUSA*	64X80X8
15031	*C-R*	**451583**!
15031000	*AJUSA*	009
15031400	*AJUSA*	712005
15031500	*AJUSA*	226530
15032	*C-R*	40059S
15032100	*AJUSA*	226820
15032200	*AJUSA*	712511
15032300	*AJUSA*	68X90X10!
15032400	*AJUSA*	70X85X8!
15032500	*AJUSA*	5606
15032600	*AJUSA*	1021V
15032700	*AJUSA*	70X88X8!
15032800	*AJUSA*	227020
15032900	*AJUSA*	227040
15033	*C-R*	470059
15033	*C-R*	**470380**
15033000	*AJUSA*	227040
15033100	*AJUSA*	227040
15033400	*AJUSA*	227045
15033500	*AJUSA*	227045
15033800	*AJUSA*	227235
15033900	*AJUSA*	227409
15033LPD	*JN-MN*	130X160X12
15034	*C-R*	**470380**!
15034000	*AJUSA*	227410
15034200	*AJUSA*	75X90X10
15034400	*AJUSA*	227550
15034500	*AJUSA*	227550
15034600	*AJUSA*	227550
15034700	*AJUSA*	227550
15034800	*AJUSA*	1019
15034900	*AJUSA*	227610
1503490M1	*MASSE*	240151
15034SA	*SPG*	**415034**!
15035	*C-R*	**470380**!
15035300	*AJUSA*	227830
15035600	*AJUSA*	228005
15035700	*AJUSA*	228008
15035700	*AJUSA*	6481=
15035800	*AJUSA*	228009
15035900	*AJUSA*	80X100X10!
15035SA	*SPG*	**415035**
15036	*C-R*	470059
15036	*C-R*	**470380**
15036	*SPG*	**415036**
15036100	*AJUSA*	228009
15036200	*AJUSA*	228009
15036400	*AJUSA*	228010
15036500	*AJUSA*	228020
15037	*C-R*	**470380**!
15037000	*AJUSA*	228480
15037100	*AJUSA*	228480
15037300	*AJUSA*	228250
15037300	*AJUSA*	710448
15037400	*AJUSA*	710294
15037500	*AJUSA*	228410
15037600	*AJUSA*	228480
15037700	*AJUSA*	716102
15037776	*FRKLN*	**413248**
1503777	*FRKLN*	**413248**
1503778	*FRKLN*	**470565**!
1503779	*FRKLN*	**470565**!
15037900	*AJUSA*	6469
15037900	*AJUSA*	716102
15038	*C-R*	470059
15038	*C-R*	**470380**
15038000	*AJUSA*	6469
15038000	*AJUSA*	716102
15038100	*AJUSA*	716102
15038400	*AJUSA*	710232
15038500	*AJUSA*	228700
15038600	*AJUSA*	3772
15038700	*AJUSA*	3772

! Industrial Size/Type * Minor Width Difference

= The U.S. customer service number is 877-4-TIMKEN. The Canadian customer service numbers are 800-565-4927 (English) and 800-565-0438 (French-Canadian).

Mfr. No.	Name	Zero Duplication or Recommended Industrial
15038900	AJUSA	710237
15039	C-R	470059
15039	C-R	**470380**
15039000	AJUSA	229005
150392	WAUKE	470059
150392	WAUKE	**470380**!
15039200	AJUSA	229005
15039300	AJUSA	229005
15039400	AJUSA	229010
1503967	FRKLN	**471272**!
15039800	AJUSA	710288
15039900	AJUSA	710288
1503OS	JN-MN	**416229**
1504	C-R	HU149A
1504+2110	STEM	**416158**
1504+320-2110	STEM	386025A
1504+320-2110	STEM	**416158**
15040	SPG	**416891**!
15040000	AJUSA	229210
15040100	AJUSA	717005
15040500	AJUSA	4359V
15040600	AJUSA	710060
15040700	AJUSA	229510
15041	C-R	472189A
15041	C-R	9613S
15041100	AJUSA	231002
15041300	AJUSA	710290
1504180	FRKLN	**412920**!
15041800	AJUSA	110X135X12
15042000	AJUSA	5625
1504210M1	MASSE	40566S
15043	C-R	9613S
15043100	AJUSA	231705
15043500	AJUSA	223230
15043700	AJUSA	222540
15044	C-R	9613S
15044200	AJUSA	225020
150446	JEFF	**415263**
15044600	AJUSA	224462
15044700	AJUSA	224460
15044800	AJUSA	224250
15045	C-R	9613S
15045100	AJUSA	224650
15045500	AJUSA	224560
15045600	AJUSA	231052
15045700	AJUSA	223250
15045700	AJUSA	710415
15045900	AJUSA	223520!
15047	C-R	4370N
1504716	FRKLN	**416624**!
15047300	AJUSA	1121
15047400	AJUSA	228015
1504754M1	MASSE	**471192**
1504755M1	MASSE	**473234**!
15048500	AJUSA	223750
15048600	AJUSA	229005
15048800	AJUSA	710233
15048900	AJUSA	710234
15048X	MASSE	**450765**!
15049000	AJUSA	223230
15049100	AJUSA	710236
15049200	AJUSA	710235
15049300	AJUSA	716102
15049400	AJUSA	2025
15049500	AJUSA	716102
15049600	AJUSA	710187
15049700	AJUSA	1120
1504RC	SUL	**415035**!
1504RC	SUL	**415035**
15050	C-R	9613S
15050200	AJUSA	223802
1505044	MASSE	450269
150511R91	IH	40316S
1505258M1	MASSE	**474272**
15053	SIDEW	**415379**
15053	SIDEW	**415379**!
1505328M1	MASSE	**471442**!
150539	AMC	**472560N**!
15054	C-R	5200
15054LPD	JN-MN	3476
1505900	ITM	BS40535
1505903	ITM	BS40535
1505RC	SUL	**417344**!
150604	OLIVE	417267
1506224M1	MASSE	340823
150628H1	IH	**471766**!
15065	C-R	7886S*
15065LUP	JN-MN	442874
15067LUP	JN-MN	**416167**!
1506RC	SUL	**415995**!
1507+320-2109	STEM	370036A
1507+320-2109	STEM	370349A
1507+320-2109	STEM	380036A
15070	C-R	**471820**
15070LPD	JN-MN	**417533**
15072STLUP	JN-MN	**415076**
15076	C-R	**471820***
15076LDS	JN-MN	**417602**!
15077	C-R	7886S*
1507800	ITM	BS40380
1507808	ITM	TCS45472
15079	C-R	7886S
15079	TMTR	**471466**!
1508+2131	STEM	370019A
1508+320-2114	STEM	370019A
1508+320-2131	STEM	370019A
15080	C-R	40063S!
15081	C-R	**471820**
15082	C-R	**471820**
150833M1	MASSE	**415991**
150833M1	MASSE	455146!
15084	C-R	7886S
1508503	ITM	TCS45727
1508509	ITM	TCS45725
15086	C-R	**471344**
15087	C-R	**471344**
15087	EATON	**415991**
15087	EATON	**415991**!
15087	FULLE	**415991**
15087	FULLE	**415991**!
15089LPD	JN-MN	227550
15089LPD	JN-MN	75X100X12!
1509	C-R	HU003A
1509+2117	STEM	370030A
1509+320-2117	STEM	370030A
15090	C-R	**471344***
15092	C-R	**471344***
15093	C-R	**471344***
1509305	ITM	TCS45725
1509309	ITM	TCS45725
15094	C-R	**471344***
15095	C-R	**471862***
15095	SPG	**416271**!
150951	JEFF	**417362**!
15095S	SPG	**416271**!
150967	JEFF	**471103**!
15099LUP	JN-MN	**471192**
150X180X12SC	TRSCM	150X180X12
150X180X12TC	TRSCM	150X180X12
150X180X15SC	TRSCM	150X180X15
150X180X15TC	TRSCM	150X180X15
150Z1	C-R	**471224**!
1510+2118	STEM	370037A
1510+2118	STEM	370338A
1510+320-2102	STEM	380023A
15100	MICH	320457
15100	UNIVE	320457
15102	C-R	**473228**
15103	C-R	**473228**
15104	C-R	**473228**!
15105	C-R	**473228**
15105SA	SPG	**415938**
15108	SPG	**476470**
15109	C-R	**473228**
1511	C-R	HU024A
1511+2129	STEM	**416892**
1511+320-2129	STEM	**416892**
1511035	C-W	**415725**!
1511035	WOOL	**415725**!
15112	MICH	**470004**!
15112	UNIVE	**470004**!
15113	C-R	**473228**!*
15113A	C-R	**415437**
15113A	C-R	**415437**!
15114G	P-C	TCS45483
15116	C-R	**473228**!
15116A	C-R	**471766**!
15118	C-R	**473228**!*
1512	ALLCH	**471766**!
1512	TRAC	**471766**!
15120	C-R	**473228**!*
15120	C-R	**473228***
15124	C-R	**473228**
15125	C-R	**473228**
15129	C-R	**473228**!*
15129LPD	JN-MN	30X47X7
1513	C-R	HU044A
15130	C-R	**473228**!*
15131	C-R	**473228**!*
15135	C-R	**473228**!*
151371R91	IH	**415449**
15139	C-R	**473228**
1514014	ITM	**471224**!
15141	C-R	**473228**!
151417	AM WH	**417596**
15141LDS	JN-MN	**415035**
15142	C-R	**473228**!
15143LDS	JN-MN	**474281**!
15147	C-R	**473228**!*
15147	SPG	**415449**!
15149	SPG	**417343**!
1515	C-R	HU028A
1515+2132	STEM	**415058**
1515+320-2132	STEM	**415058**
15150	C-R	**473228**!*
15153	C-R	**473228**!
15153LPD	JN-MN	**417350**!
15154	SPG	**417351**!
15156NA	SPG	**417621**
15157	C-R	**473228**!
15158	C-R	**473228**
15159	C-R	**473228**!
1516+2097	STEM	370069A
1516+320-2097	STEM	370069A
1516+320-2097	STEM	380069A
15160	C-R	40067S=
15161	C-R	40067S=
15162	C-R	**473228**
15164	C-R	**473228**
15166	C-R	**473228**!
1517+2113	STEM	370021A
1517+320-2113	STEM	370021A
15170	C-R	**473228**
15171	C-R	**473228**
15171LDS	JN-MN	**416381**
1517230	OSHKO	**416888**!
15174	C-R	200861
15174LPD	JN-MN	**416500**!
15175	C-R	**410190**
15176	C-R	**410190***
15177F	OSHKO	**417349**=
151818	BRCWY	**450400**
15182TB	TRSCM	**253099**!
15182TB	TRSCM	473099
15182VB	TRSCM	**253099**
15183	SPG	**417205**!
15184	C-R	**410190**
15185	OLIVE	**472924**!
15186	C-R	**470380**!
15186	C-R	472189A
151876	WAUKE	**471413**!
151879	WAUKE	**471413**!
15189	C-R	**451857**
151890	BRCWY	**323138**!
15190	C-R	41461S
15191VB	TRSCM	**474276**
15192NA	SPG	415192N
15192TB	TRSCM	**474276**!
15192TB	TRSCM	**474276**!
15193	SIDEW	204029
15193	SIDEW	204507!
151932VB	TRSCM	443018!
15194	C-R	**451857***
15195	SPG	416556!
15195	SPG	**472157**
151962R91	IH	**415449**
15198	C-R	41461S
151982KBJ	TRSCM	3677
15198LPD	JN-MN	**473229**!
15199LDS	JN-MN	7131
152	C-R	5585
15200	C-R	**470487**!
1520103	ITM	**471950**
15201SS	JN-MN	231404*
15202	C-R	50345=
15202	SPICE	50402
15202SP	TRSCM	224015
15202VB	TRSCM	240319
15203SP	TRSCM	1217
15203TB	TRSCM	**481163**!
15203TB	TRSCM	6759S
15204	C-R	**450984***
1520503	ITM	1174
1520503	ITM	38X52X8.5!
15206	C-R	9613S
152062VB	TRSCM	7537S
152063SB	TRSCM	**480630**!
152069	ADAMS	**416654**!
152069	WABCO	**416654**!
15206SG	TRSCM	**480630**!
15207	AIRCO	**471766**!
15207	C-R	**470487**!
15208	C-R	**473440**!
15209	C-R	**450984***
15209	SPICE	**415001**!
15209LUP	JN-MN	120X160X12
1521103	ITM	**1213N**
15212	C-R	**473228**!
15212	C-R	**473440**
152128	AM WH	**455194**
15213	C-R	**473440**!
15213	SPG	**417247**!
15213NA	SPG	415213N
15213TB	TRSCM	**473227**!
15213TEB	TRSCM	**473227**!
15213VTB	TRSCM	**473227**
15214	C-R	**473440**!
15215	C-R	**473440**!

! Industrial Size/Type * Minor Width Difference

= The U.S. customer service number is 877-4-TIMKEN. The Canadian customer service numbers are 800-565-4927 (English) and 800-565-0438 (French-Canadian).

Mfr. No.	Name	Zero Duplication or Recommended Industrial
1521506	*ITM*	225020
1521506	*ITM*	50X68X8!
15219SA	*SPG*	**415219**
152205	*JOHND*	5778
152218	*OLIVE*	**472144**!
15222	*C-R*	**474281**!
152223TB	*TRSCM*	**480844**
152225VL	*TRSCM*	40438S
15222VHY	*TRSCM*	340136
1522301	*ITM*	227040
1522301	*ITM*	70X90X10!
15223SB	*TRSCM*	**470625**
15223TB	*TRSCM*	**470625**!
15223VTB	*TRSCM*	**470625**!
15225	*DIA*	6532S=
15225	*EATON*	6532S=
152257	*ALLCH*	**416865**!
152264TA	*TRSCM*	9363S
152270	*JEFF*	417490
152275SH	*TRSCM*	8940S
15228	*C-R*	**474281**!
152283	*JEFF*	**417073**
15229	*C-R*	**474281**!
1522B	*GOODM*	**472572**!
1522D	*GOODM*	**472572**!
1522T2	*DIA*	**410308**!
1522T2	*WHITE*	**410308**!
1523	*C-R*	HU066A
15230	*C-R*	**474281**!
152302	*JEFF*	55155=
1523102	*ITM*	1012
1523102	*ITM*	1012N
1523301	*ITM*	**1213N**
15233VHY	*TRSCM*	204013
15234	*C-R*	471915*
15234VB	*TRSCM*	203013
15235	*C-R*	**450523***
15236	*C-R*	**450523**
152372VH	*TRSCM*	40059S
152373TB	*TRSCM*	**470380**!
152373VTB	*TRSCM*	470059
152374TBP	*TRSCM*	472189A!
152374TBP	*TRSCM*	9613S
152375SA	*TRSCM*	410059
152375SA	*TRSCM*	470059
1523D	*GOODM*	**473238**
1524	*C-R*	HU070A
1524-2	*DAVIS*	**471766**
15240	*C-R*	**450326**
1524018	*ITM*	1174
1524018	*ITM*	38X52X8.5!
15241	*C-R*	**471958**
152427	*FUNK*	**473228**
15242VB	*TRSCM*	40063S!
15243SB	*TRSCM*	**471820**
152443TL	*TRSCM*	**471344**
152468	*JEFF*	**417621**!
152469	*JEFF*	**416125**!
1524D	*GOODM*	**450084**!
15250	*C-R*	210914
15250	*MURRA*	**417316**!
152505SA	*TRSCM*	**473229**
15252	*JA-MI*	6283S
15252	*JAE*	6283S
15253	*C-R*	450540
152536	*JEFF*	**473235**!
15253SB	*TRSCM*	**473228**
15253TB	*TRSCM*	**473228**!
152542	*JEFF*	**416271**!
15255	*C-R*	6922=
15255SA	*TRSCM*	**473228**
1525601	*ITM*	**1213N**
152563TB	*TRSCM*	**410190**
152565TA	*TRSCM*	**410190**
15257	*C-R*	455308
15258	*C-R*	455308
1526	*C-R*	**471539**!
1526103	*ITM*	224100
1526103	*ITM*	40X65X10!
152623TB	*TRSCM*	**470682**
15262VH	*TRSCM*	41461S
1526302	*ITM*	**472213**
15263SL	*TRSCM*	**451857**
15264SP	*TRSCM*	8610
1527	*C-R*	HU019A
15270	*C-R*	710247
15272	*SPG*	**416706**!
15273SB	*TRSCM*	**473440**!
15275TC	*TRSCM*	**474281**
152772	*AM WH*	**416149**
15278	*CHAMP*	370054A
1528	*C-R*	HU028A
15281SA	*SPG*	**417349**
152833TB	*TRSCM*	471915
152848	*HYST*	**417488**!
152857	*HYST*	**415303**!
152863	*HYST*	**416278**
152877	*JEFF*	**473367**!
152877	*JEFF*	**473367**
15287A	*MASSE*	**473467**
152883	*HYST*	**416888**!
152885	*HYST*	**415725**!
152886	*HYST*	J1136
152892	*CUMMI*	470059H=
15290	*C-R*	**473228**
15292	*C-R*	710318*
15292	*C-R*	710319
1529304	*ITM*	224045
1529304	*ITM*	40X62X12!
152934	*HOUGH*	**470898**
152934H1	*HOUGH*	**470898**
15294A	*C-R*	**471539**!
152953	*US-EL*	**472070**
15296A	*C-R*	**471442**!
15298	*C-R*	710309
1529A	*WAYNE*	**474254**!
153-124-04	*TROS*	**323138**!
1530	*C-R*	HU014A
15300	*C-R*	1205
15300	*C-R*	1205N
15300	*C-R*	321416
153002	*WAUKE*	**471466**!
153032	*ALLCH*	**415960**!
15303TB	*TRSCM*	**471958**
15304804	*TROS*	473406!
15305	*C-R*	8610
15305	*SPG*	**415991**
1530501	*ITM*	1181
1530501	*ITM*	41X56X7!
1530505	*ITM*	1181
1530505	*ITM*	41X56X7!
15305607	*TROS*	**471137**
15306	*C-R*	8611N
15306	*SIDEW*	204017
153097	*WAUKE*	**417546**!
153097A	*WAUKE*	455071N=
1531	*C-R*	HU007A
15310	*C-R*	710123
15310007	*TROS*	**450593**!
15310407	*TROS*	**473419**
15310607	*TROS*	450044
15310805	*TROS*	**476838**!
15310807	*TROS*	**476838**!
15311007	*TROS*	450482
1531102	*ITM*	1214
1531102	*ITM*	1214N
153114	*JEFF*	**471466**!
153115	*JEFF*	**413247**!
153116	*JEFF*	416163
153117	*JEFF*	**416666**
153119	*HYST*	**473236**!
15312	*C-R*	710122
15312406	*TROS*	**323138**!
153128H1	*HOUGH*	455509
153139	*US-EL*	**470565**!
15315	*NPG*	**472572**
1531501	*ITM*	1180
1531501	*ITM*	41X55X7!
15315SA	*SPG*	**415984**!
15325	*C-R*	470059
15325	*C-R*	**470380**!
15326	*C-R*	470059
15326	*C-R*	**470380**
1532901	*ITM*	1174
1532901	*ITM*	38X52X8.5!
15291	*WAUKE*	**471255**!
153291B	*WAUKE*	**471255**!
153291C	*WAUKE*	**417365**
15329A	*C-R*	**412473**!
15330	*C-R*	**452222**!
153314	*HYST*	**472015**!
153318A	*OLIVE*	450073
15332	*C-R*	**452222**!
153322	*HYST*	**417247**!
1533302	*ITM*	1208
1533302	*ITM*	48X72X7!
1533303	*ITM*	1969
1533303	*ITM*	48X63X9!
153334R1	*IH*	240733
15338	*C-R*	**452222**!
1534	*C-R*	HU008A
15341	*C-R*	470059
15341	*C-R*	**470380**
15343	*C-R*	**452222**
153463521	*TOWNR*	200322
15353	*C-R*	710214
15355	*DIA*	5951
15355	*EATON*	5951
1535606	*ITM*	**473210**
1536	*C-R*	HU012A
1536301	*ITM*	1174
1536301	*ITM*	38X52X8.5!
15364A	*MASSE*	240385
1537	*ALOY*	9569S
153710	*JEFF*	**417344**!
153716	*HYST*	200885
153717	*HYST*	JV1371
15372	*C-R*	710118
153725	*JEFF*	**416288**!
15373	*C-R*	40369S
15374	*C-R*	8610
15376	*C-R*	8940S
15379S	*SPG*	**415379**
1537D5	*WHITE*	**471689**!
1537OS	*JN-MN*	**417316**!
1538	*ALLCH*	**471271**!
1538	*C-R*	HU011A
1538	*TRAC*	**471271**!
1538170	*OSHKO*	370003A
15382	*C-R*	712011
15382	*NEWPR*	3173
15382	*NEWPR*	710928
15388	*SIDEW*	**473367**
1538D5	*WHITE*	**473203**
1538F	*ALOY*	6815
1538OS	*JN-MN*	**417269**!
1539027	*ONAN*	205017
1539675	*FMC*	**327303**!
1539676	*FMC*	**417551**
1539F	*OSHKO*	**416107**!
1539F	*OSHKO*	455073
154005	*JEFF*	**416339**
154005	*JEFF*	455031!
154005	*SUL*	**416339**
154005	*SUL*	455031!
15401A	*C-R*	**473214**
154040	*JA-MI*	**472179**
154040	*JAE*	**472179**
154041	*JA-MI*	**472185**!
154041	*JAE*	**472185**!
1540501	*ITM*	32X58X8!
15408A	*C-R*	**471466**
15409	*SIDEW*	**473228**
154141	*JEFF*	**417210**!
15415LDS	*JN-MN*	416556!
15415LDS	*JN-MN*	**472157**
15419	*SPG*	**417492**
1542	*C-R*	HU013A
154253	*CASE*	**471424**!
154269	*SIMPL*	**473157**
1543	*C-R*	HU009A
154344H2	*IH*	**415854**
154347R91	*IH*	**471224**!
15439LPD	*JN-MN*	**470954**!
1543F	*OSHKO*	**416158**
1544	*ALOY*	**472070**
15440	*C-R*	710046
154437R91	*IH*	**471224**!
15445	*C-R*	1126
15445	*C-R*	710120
15450	*C-R*	472635
154507	*CASE*	477123=
15451	*C-R*	223802
15451LPD	*JN-MN*	**471645**
15457LPD	*JN-MN*	**412861**
15460	*C-R*	8695S
154615H1	*IH*	**410308**!
154615H1	*IH*	473468
15462	*C-R*	4244
15463	*C-R*	**472213**
1546RC	*SUL*	**471549**!
1547	*ALOY*	**473459**
15471LPD	*JN-MN*	**417492**
15473STLUP	*JN-MN*	509756=
154745	*JEFF*	**471281**!
154745	*SUL*	**471281**!
154751	*JEFF*	**471103**!
154751	*JOY*	**471103**!
154774	*WAUKE*	420
1548OS	*JN-MN*	**415991**
1548OS	*JN-MN*	455146!
1548RC	*SUL*	**416891**!
15491LPD	*JN-MN*	33X50X12!
15493	*TLSMI*	240816
154935	*HOUGH*	**415379**
154935H1	*HOUGH*	**415379**
1549OS	*JN-MN*	**415449**!
154G119-90	*GR-DV*	**417210**!
154G119-91	*GR-DV*	**415072**
154G119-92	*GR-DV*	**415116**
154G119-93	*GR-DV*	**416888**!
154G149-72	*GR-DV*	**417247**!
154G149-73	*GR-DV*	417548
155	*C-R*	5390
15500	*C-R*	710233
1550001	*ITM*	1994
1550001	*ITM*	48X70X9!
15502	*C-R*	4244

! Industrial Size/Type * Minor Width Difference

= The U.S. customer service number is 877-4-TIMKEN. The Canadian customer service numbers are 800-565-4927 (English) and 800-565-0438 (French-Canadian).

Mfr. No.	Name	Zero Duplication or Recommended Industrial
15502	CHRYS	7412S
155044	HOUGH	**415483**!
1550555	CLARK	**471341**!
1550556	CLARK	**471344**
1550559	CLARK	5751
15506	C-R	330749V
155079	BENDI	**455079**!
15508	C-R	8421S
15508LUP	JN-MN	223035
15509	C-R	7994S
1550929	CHRYS	**471827**
1550988	CLARK	**472179**
1550989	CLARK	**413247**!
1550990	CLARK	**416282**
1550992	CLARK	**417353**!
15509928	GMC	**470625**!
1551061	CHRYS	6636S
15510627	GMC	**471271**!
15510775	GMC	**415066**
15510805	TROS	**350974**!
15510919	GMC	9773
15511	C-R	340927
15511060	GMC	**415458**
15511066	GMC	**416654**
15511078	GMC	**412473**
15511083	GMC	712937
15511087	GMC	722250
15511129	GMC	**416654**!
15511587	GMC	**416282**
15511791	GMC	**472636**!
15512	C-R	40X50X8!
15512	C-R	710158
15512274	GMC	476023V!=
15512423	GMC	100263
15512423	GMC	3905
15512458	GMC	4561V
15512458	GMC	**473274**!
15513351	GMC	722250
15515	C-R	**473517**!
15516	C-R	**473517**!
15517	C-R	**473517**!*
15518	C-R	**473517***
15519013A	HARWA	155X190X15
15519908	GMC	370011A
15519910	GMC	370011A
1552001	ITM	224550
1552001	ITM	45X65X8!
15520072	GMC	370145A
15521	C-R	**472213**
15521874	GMC	710102
15521904	GMC	710106
15522	C-R	**472213**
15522060	GMC	4762N
15522062	GMC	710105
15523	C-R	**472213**
15524	C-R	**472213**
15524A	C-R	**415697**!
15524A	C-R	455547
155256	HYST	**415498**
15526364	GMC	**415234**!
15526365	GMC	**415960**
15526366	GMC	**417484**!
15526367	GMC	100494
15526367	GMC	**476470**!
155265TB	TRSCM	8695S
15527296	GMC	727410
15527297	GMC	**470954**
15527541	GMC	**471554**!
15527542	GMC	**471231**!
15527543	GMC	**471267**!
15527545	GMC	**472311**!
15527546	GMC	**471224**!
15527547	GMC	**471649**!
15527548	GMC	**471689**!
15527549	GMC	**471760**
15527550	GMC	**472560N**
15527551	GMC	**470712**!
15527552	GMC	**471763**
15527553	GMC	**471785**!
15527554	GMC	**473425**
15527555	GMC	**471765**!
15527556	GMC	240356
15527557	GMC	322353
15527557	GMC	**474278**!
15527558	GMC	7412S
15527559	GMC	**471750**!
15527560	GMC	**471766**!
15527562	GMC	**471795**
15527563	GMC	6370N
15527564	GMC	**472354**!
15527565	GMC	**482163**!
15527566	GMC	**472258**!
15527567	GMC	**471192**
15527568	GMC	**473214**!
15527569	GMC	**473215**
15527570	GMC	6241S
15527571	GMC	**473258**!
15527572	GMC	**474276**
15527573	GMC	**470625**!
15527574	GMC	340136
15527575	GMC	**470380**!
15527576	GMC	470059
15527576	GMC	**470380**!
15527577	GMC	9613S
15527578	GMC	**471827**
15527579	GMC	**473229**!
15527580	GMC	**481181**!
15527581	GMC	204017
15527582	GMC	**473367**
15527583	GMC	**473367**
15527584	GMC	**473010**!
15527585	GMC	**473234**
15527586	GMC	**450400**
15527587	GMC	42352S
15527588	GMC	9845
15527589	GMC	**472164**!
15527590	GMC	**472164**
15527591	GMC	**472164**
15527592	GMC	**472193**!
15527593	GMC	**472179**
15527594	GMC	**471141**!
15527595	GMC	**472747**
15527596	GMC	2942
15527597	GMC	**472439**
15527598	GMC	331227H
15527599	GMC	7107A=
15527600	GMC	**414045**!
15527601	GMC	6808N
15527602	GMC	**473459**
15527603	GMC	**472394**
15527604	GMC	**471424**!
15527605	GMC	**472924**!
15527606	GMC	**470530**!
15527607	GMC	**470530**!
15527608	GMC	**473463**
15527609	GMC	**410102**
15527610	GMC	6954S
15527611	GMC	5756
15527612	GMC	**470898**
15527613	GMC	**470898**!
15527614	GMC	**470898**
15527615	GMC	**410308**!
15527615	GMC	473468
15527616	GMC	**410308**!
15527617	GMC	**472409**
15527618	GMC	3103!
15527619	GMC	**471341**!
15527621	GMC	**410737**!
15527622	GMC	**410737**!
15527623	GMC	**472636**!
15527624	GMC	44052
15527625	GMC	**411253**!
15527626	GMC	493291
15527627	GMC	493637
15527628	GMC	**413246**
15527629	GMC	**412119**!
15527630	GMC	**410987**!
15527631	GMC	5487
15527632	GMC	**471271**!
15527633	GMC	**415449**!
15527634	GMC	**415449**!
15527635	GMC	8975S
15527636	GMC	**455079**!
15527637	GMC	5401
15527638	GMC	**411330**!
15527639	GMC	**451143**
15527640	GMC	**413248**
15527641	GMC	**415458**!
15527642	GMC	**415458**!
15527643	GMC	9773
15527644	GMC	**455008**
15527645	GMC	**417484**!
15527646	GMC	**417484**!
15527647	GMC	**417316**!
15527648	GMC	2222
15527649	GMC	**415960**!
15527650	GMC	**415960**
15527651	GMC	**415960**!
15527652	GMC	2081
15527653	GMC	**417158**!
15527654	GMC	**417158**!
15527655	GMC	**417134**
15527656	GMC	2674
15527657	GMC	**416500**
15527658	GMC	**417349**!
15527659	GMC	**415995**!
15527660	GMC	8976S
15527661	GMC	**416297**
15527663	GMC	5313
15527664	GMC	6358
15527665	GMC	**416292**
15527666	GMC	**415085**!
15527666	GMC	456648
15527667	GMC	**455249**!
15527668	GMC	**455858**
15527669	GMC	415146!
15527669	GMC	**415991**
15527670	GMC	**415991**
15527671	GMC	**415437**
15527672	GMC	**417355**!
15527672	GMC	485497
15527673	GMC	415983N!
15527674	GMC	2377
15527675	GMC	**415379**!
15527676	GMC	**415697**!
15527677	GMC	**415958**!
15527677	GMC	**415958**
15527678	GMC	456618
15527679	GMC	**417506**
15527680	GMC	6864S
15527681	GMC	**417530**
15527682	GMC	**415351**!
15527683	GMC	7006S
15527684	GMC	2297V!
15527755	GMC	370132A
15527763	GMC	**415958**
15527780	GMC	370124A
15527781	GMC	**416888**
15527LDS	JN-MN	**455406**!
15528	BU-SP	**472439**
155280	JEFF	**416288**!
15529	BU-SP	**415379**
1553	CALI	**416107**!
1553	CALI	455073
15530	C-R	200887
15530288	GMC	710281
155314	HYST	**472015**!
155316PSB	TRSCM	5778
155318A	OLIVE	450073
155318A	WHITE	450073
15533	C-R	**472299**
155331A	OLIVE	**416125**!
155331A	WHITE	**416125**!
15533564	GMC	**415082**
15534	C-R	**472299**
15534471	GMC	HU042A
155346	HYST	**417343**!
155346A	OLIVE	**473473**
155346A	WHITE	**473473**
15535	C-R	8935S
15535	TMTR	**471763**
15535300	GMC	**415995**
15536	CATER	**472397**!
15536	TMTR	**472397**!
155361	HYST	JX1190
155371	HYST	**415867**
15538	C-R	**472299***
155384	AMC	**471141**!
15539	C-R	40438S
15540	C-R	**472299**
1554005	ITM	224820
1554005	ITM	48X62X8!
155402	HYST	J1111
155403	HYST	**412920**
15541	C-R	**472299***
15542	C-R	**472299**
15542	SIDEW	**471692**!
15543	C-R	**472299**
15543	EMRSN	**472299**
15544	C-R	40438S
15546	C-R	2506
15546800	GMC	9613S
15549	C-R	**472299**
15550	C-R	**472299**
15550869	GMC	370003A
15551	C-R	**472299**
15551435	GMC	**473471**
15557	C-R	**450666***
15557677	GMC	370003A
15557678	GMC	370023A
155577	HYST	**471538**!
15557LUP	JN-MN	**472164**!
15558LUP	JN-MN	**450446**
155627A	OLIVE	**417344**!
155627A	WHITE	**417344**!
15563	C-R	**450666***
15566LDS	JN-MN	**471271**!
15569	C-R	**471821**!
1557	ALOY	6808N
15570	C-R	**471821**!
15574LUP	JN-MN	455037
15575957	GMC	**415991**
15577SA	SPG	**415577**
15579	C-R	**471821**!
15579788	GMC	710046
155801	CH MA	**410496**!
155802	CH MA	**350936**
15580225	GMC	714503

! Industrial Size/Type * Minor Width Difference

= The U.S. customer service number is 877-4-TIMKEN. The Canadian customer service numbers are 800-565-4927 (English) and 800-565-0438 (French-Canadian).

Mfr. No.	Name	Zero Duplication or Recommended Industrial
15580226	GMC	330385!
155803	CH MA	8597S
15580329	GMC	714503
15580381	GMC	472572
155805	CH MA	417351!
155806	CH MA	472164!
155807	CH MA	473228!
155807A	OLIVE	416339
155809	CH MA	481163!
155810	CH MA	410308!
155813	CH MA	7537S
155819	CH MA	6371=
155820	CH MA	471835!
15582172	GMC	6358
15582232	GMC	415960
15582257	GMC	710304
155831	CH MA	340817
15583783	GMC	9316
155838	CH MA	471272!
15583894	GMC	100263
15583894	GMC	4562V
155843	CH MA	6575S
155846	CH MA	473235!
15585	C-R	471821!
155856	CH MA	473454!
155862	CH MA	416339
155863	CH MA	472636!
1558633	GMC	415088
15588359	GMC	710101
15588691	GMC	370199A
15588691	ROCKW	370199A
15588692	ACDEL	370211A
15588692	GMC	370211A
15588693	GMC	370212A
155887	HOUGH	415938
155887H2	HOUGH	415938
155887H2	IH	415938
15589475	GMC	6358
15589666	GMC	710103
15590	C-R	471821!
1559008	ONAN	473445
15591	C-R	471821!
15592	C-R	471821!*
15594384	GMC	473471
15595878	GMC	470530
1559802	ITM	1955
1559802	ITM	52X65X9!
1559809	ITM	1012
1559809	ITM	1012N
1559819	ITM	BS40382
155X190X15	SIMRT	155X190X15
15600	C-R	471827!
156004	GMC	416921!
156005	GMC	415284
15601	C-R	471827*
156019	GMC	417344!
156020	GMC	473243
15602640	GMC	5682
156042	HYST	413247!
15604806	TROS	470390
15605	C-R	471827*
156082	US-EL	471821!
1561	C-R	471270!
15610004	TROS	471733
15610007	TROS	471733
15610807	TROS	470712!
15611171	GMC	370008A
15611204	TROS	472475
15611205	TROS	472475
15611604	TROS	471737
15612	C-R	450188
15612007	TROS	473423
15612404	TROS	472354!
15612406	TROS	472354!
15612407	TROS	472354!
15613	C-R	471827!
15613203	TROS	253099
15614	C-R	472560N!
15614M1	BUC-E	472560N!
15614M1	C-R	472560N!
15616050	GMC	714512
156168	HYST	417278
15617178	GMC	6759S
15617869	GMC	5682
15620	C-R	471827!
156200	HYST	416229
156202SB	TRSCM	8421S
156202VB	TRSCM	7994S
156202VSB	TRSCM	330749V
156205	HYST	471424!
156210A	OLIVE	471554!
156210A	WHITE	471554!
156220	HYST	415897
156220TZ	TRSCM	472213
156223	HYST	415458!
156233TB	TRSCM	472299
156234	HYST	416339
1562431SL	TRSCM	471821
156243TB	TRSCM	471821!
156245TB	TRSCM	471827!
156252VHY	TRSCM	40185
156253SB	TRSCM	472213
156253TB	TRSCM	473229!
156255SA	TRSCM	200640
15626	C-R	471827
156275SA	TRSCM	473441
15628LDS	JN-MN	416891!
1563	ALOY	6954S
15634	C-R	473229
15634020	GMC	4525V
15634058	GMC	473237
15634LDS	JN-MN	472394
15635	C-R	473229
15635	C-R	473229*
15635	C-R	711552
15635260	GMC	714655
15635281	GMC	470530
15635334	GMC	415449
15635337	GMC	7412S
15635377	GMC	7412S
15636443	GMC	224850
1564	C-R	HU037A
1564114	CLARK	413247!
15641LPD	JN-MN	417210!
15642	C-R	473229!
15643	C-R	473229!
15644A	MASSE	471192
15646	FMC	417344!
15648	C-R	40185
15649	C-R	42364S=
1565	ALOY	442380
1565	C-R	HU066A
15651	C-R	473229!
15651660	GMC	4739
15651661	GMC	4740
1565254	CHRYS	5471$
156533	IH	472397!
15654	C-R	473229!
15655	C-R	473229!
15655172	GMC	4740
156553C91	IH	472397!
15656	NATL	415656
15656	WMG	415656
15657	BU-SP	470625!
15658	BU-SP	412119!
156599	GOODM	471138!
15660	C-R	200640
156602	HOUGH	415458!
156602H2	HOUGH	415458!
15661460	GMC	4333N
15661495	GMC	710211
1566167	CLARK	472258!
1566169	CLARK	473197
1566172	CLARK	470950!
1566172	CLARK	6241S
1566175	CLARK	470380!
1566179	CLARK	470596
1566181	CLARK	472164!
1566190	CLARK	472492!
1566195	CLARK	415349
1566199	CLARK	415234!
1566208	CLARK	417082
1566211	CLARK	416664!
1566221	CLARK	417247!
1566224	CLARK	415458!
1566225	CLARK	416107!
1566225	CLARK	455073
1566231	CLARK	416345!
15662465	GMC	4503N
1566326	GMC	9773
15663537	GMC	370001A
15665322	GMC	416654
15665326	GMC	9773
15665670	GMC	370005A
15666	C-R	5790=
1566687	CLARK	417040
156670R91	IH	473459
15668LUP	JN-MN	471649!
1567	ALOY	9150S
15676	C-R	450143
15676LUP	JN-MN	416313
15677	C-R	450143*
15679880	GMC	370003A
15679881	GMC	370023A
1568	C-R	HU031A
15680A	MASSE	330385!
156846R91	IH	240816
1568501A	SIDEW	473215!
15686	C-R	470682
15687	C-R	470682
15687419	GMC	370048A
15687419	GMC	380048A
1568762	CHRYS	472354!
15688S	SPG	418028
1569	C-R	HU036A
1569	CLSON	471526!
15690	C-R	42X80X8
15692	C-R	470682
15693A	MASSE	50199S!
15693A	MASSE	6863S!
15698	C-R	470682
1569894	CHRYS	340797
15699	C-R	470682
1569915	CHRYS	410308!
156B12404	TROS	472354!
156D6	WHITE	415041
156ML14	C-R	472560N!
1570	ALOY	2955
1570	C-R	HU034A
15702	C-R	6336S
15703555	GMC	370023A
15703555	GMC	380023A
15707	C-R	471316*
157078	HOUGH	417269!
157078H1	HOUGH	417269!
157078H3	IH	417269!
157103	HOUGH	6590S
157103H1	HOUGH	6590S
157106	HOUGH	472924!
157106H1	HOUGH	472924!
157106H2	HOUGH	472924!
157106H3	IH	472924!
157113H1	IH	204078=
157120H2	IH	473517!
157136	AUTOZ	35126
157137	AUTOZ	35162
157141	JEFF	417210!
157141	SUL	417210!
157145	AUTOZ	35261
157166A	WHITE	472492!
15719	C-R	471316
15721	C-R	481397*
157217	AUTOZ	16215
157218	AUTOZ	16216
15722	C-R	471579*
157220	AUTOZ	16269
157221	AUTOZ	16268
157223	AUTOZ	16316
157224	AUTOZ	16217
157227	AUTOZ	16267
15724	C-R	471498*
15724LUP	JN-MN	417355!
15725	C-R	471316
157269R91	IH	471413
15728	C-R	471633!*
1572813	CATER	J2529
15729LDS	JN-MN	472397!
1573	ALOY	331107N
15730	C-R	471316
157305	WITTE	411245!
15730504	GMC	370199A
15731	C-R	450545*
15733	C-R	224063
15735	C-R	471316*
15736	C-R	710505
15737	C-R	4764
1574	ALOY	7044NA
15741	C-R	3459
15742	C-R	3459
15744	C-R	6336S
15744A	MASSE	471192
15746	C-R	473677
15748	C-R	450803
15749	C-R	450803
157496R91	IH	415995!
15750	C-R	3459
15752	C-R	473441
15753	C-R	1216
15753	C-R	1216N
15760	C-R	473441
15761	C-R	473441*
15764	C-R	450273
15765	C-R	450273
15766	C-R	450273
15767LDS	JN-MN	473234!
15769	C-R	450273
1577	ALOY	5778
15770LDS	JN-MN	473229!
15771	C-R	471827
15773	C-R	473442!*
15774	C-R	473442!*
15775	C-R	473442!
15776	C-R	473442!*
15777	C-R	471827
15779	C-R	473442
15780	C-R	473442
15780	C-R	5778
15781	C-R	473442!

! Industrial Size/Type * Minor Width Difference $ F-M Number Is Part Of A Kit
= The U.S. customer service number is 877-4-TIMKEN. The Canadian customer service numbers are 800-565-4927 (English) and 800-565-0438 (French-Canadian).

Mfr. No.	Name	Zero Duplication or Recommended Industrial
15784	C-R	6808N
157844	HYST	**417316**!
1578532	CLARK	370002A
15788	C-R	5778
157884	HYST	**417316**!
1579	ALOY	410059
1579	ALOY	**470380**!
15790	C-R	474133
15791	C-R	5778V
15796	C-R	3459
15800	C-R	224052
15801	C-R	224015
15801LDS	JN-MN	**416167**!
15802	C-R	224015
15802	C-R	239201
15802	C-R	4175*
15803	C-R	1217
15804	C-R	224010
15805	C-R	1962
15805	C-R	224015
15807	C-R	**1213N**
15807	C-R	40X54X6!
15808	C-R	1178
15809	C-R	710284
1581	C-R	HU028A
1581	CHEL	**472258**
15810	C-R	**1213N***
15810	C-R	40X54X6!
15810LUP	JN-MN	**415027**
15815	C-R	224020
15818	C-R	224020
15819	C-R	473677
1582	WHITE	**470565**!
15820	C-R	40X55X8!
15820	C-R	473677
15821	C-R	40X55X8V
15822	C-R	224020
15822	C-R	40X55X8!
15822A	C-R	**472015**!
15823	C-R	224020
15823	C-R	40X55X8!
15825	C-R	712551
15826	C-R	224026
158262	JEFF	**471281**!
15827F	OSHKO	**415725**!
15828	C-R	712551
15830	C-R	40X57X10
15830	C-R	710432
15835	C-R	3459
15835	C-R	40X58X10!
15835	C-R	40X58X8
158354A	OLIVE	**470954**!
158354A	WHITE	**470954**!
158358A	OLIVE	**471224**!
158358A	WHITE	**471224**!
15836	C-R	3459
15838	C-R	3459
15839	C-R	224040
15839	C-R	40X60X10!
15839LUP	JN-MN	**415447**
15840	C-R	224040
15840	C-R	40X60X10!
15841	C-R	710147
158411	GOODM	**417541**
158412	GOODM	**417506**
1584174	CLARK	**455079**!
15842	C-R	710147
15843	C-R	710202
15844	C-R	710147
158444A	OLIVE	**473231**!
158444A	WHITE	**473231**!
15845	C-R	40X62X8!
15846	C-R	40X62X8!
15846	C-R	710196
15847	C-R	40X62X7
15848	C-R	224045
15849	C-R	1216
15849	C-R	1216N
15850	C-R	224100
15850	C-R	40X65X10!
15850	C-R	474161
15851	C-R	224045
15851	C-R	40X62X8!
15852	C-R	224100
15852	C-R	40X65X10!
15853	C-R	224068*
15853	C-R	40X68X12!*
15854	C-R	40X68X12
15854	C-R	40X68X8!
15855	C-R	40X70X8
158550	ALLCH	**472179**
158556	CUMMI	**415035**=
15856	C-R	710196
15857	C-R	40X72X7
158577	HYST	9600S
15858	C-R	224068*
15859A	C-R	**470606**!
15859A	MASSE	**472157**!
15860	BU-SP	**415072**
15860	C-R	350572
15860	C-R	40X72X7!
15862	C-R	712011
15863	C-R	474133
15864	C-R	40X75X8!
15864	C-R	712011
15865	C-R	40X78X10!*
15865	C-R	40X78X8!
15866	C-R	1036
15867	C-R	1146
158685	ALLCH	**415991**
158685	ALLCH	455146!
15869	C-R	40X60X10*
15870	C-R	40X80X10
15871	C-R	40X80X10V
15872	C-R	40X80X10
15873	C-R	40X80X10V
15874A	MASSE	**415458**!
15874X	MASSE	**415458**!
15876	C-R	40X58X10
15876SA	SPG	**415876**
15877	C-R	40X80X10*
15878	C-R	40X68X12
15880	C-R	40X85X8
15881	C-R	**1213N**
15882	C-R	712011
15882	C-R	712020
15883	C-R	712011
15884G	P-C	TCS45483
15885	C-R	40X88X8
15886	C-R	710113
15887	C-R	710134
15889LUP	JN-MN	**411376**!
1589	C-R	HU005A
15890	C-R	40X90X8
1589010	OSHKO	HU110A
15891	C-R	224066
15894G	P-C	TCS45483
15896	NPG	4333N
15899NA	SPG	415899N
15899NA	SPG	**416624**
15899SA	SPG	415899N
15899SA	SPG	**416624**
1590	ALOY	9161
15900	C-R	4141
15902	C-R	710131
159035	ALLCH	**417487**
159036	ALLCH	**471272**!
15904	C-R	43074S
15907J	DIA	6638S
15910	C-R	710436
15910LDS	JN-MN	**415995**!
15910LDS	JN-MN	**415995**!
15915	C-R	**480581**=
159178	HYST	**416130**!
159183	HYST	**416039**
15920	C-R	710140
159200	JEFF	470059
159200	JEFF	**470380**!
159213PSL-H	TRSCM	**480581**
15924	C-R	**471498***
15925A	C-R	**474272**
159295	HYST	45637S
15929LUP	JN-MN	**417501**
15933	C-R	**450065**
159372	WAUKE	**470625**!
15942	C-R	**450065**
159483	WAUKE	470645
1595	ALOY	**473228**
15951	SIDEW	**450492**
15952X	MASSE	**472164**!
159533	JEFF	**455079**!
15953X	MASSE	**473421**
15954	C-R	**450065***
15955	C-R	**450065***
159556	JEFF	**471267**!
159562	JEFF	**415725**!
159563	JEFF	**415725**!
159566	JEFF	**471267**!
159568	JEFF	**417357**
159568	JEFF	455192!
15957	C-R	**450065**
159572	HYST	**416624**!
15960	C-R	**482253**
159604	JEFF	**472924**!
159614	ALLCH	**416339**
159614	ALLCH	455031!
159615	ALLCH	**415072**
15965961	GMC	370008A
15968	C-R	451469*
15969	SPICE	42763
159691	SPICE	**473444**
159693	SPICE	42763
159697	SPICE	42763
159727	JEFF	**415303**!
159728	JEFF	**417487**
15973123	GMC	370120A
15975	C-R	450274*
15978	C-R	710227
1598	KINNR	**415995**!
15980	BU-SP	**473467**!
15981	BU-SP	**415449**!
15981A	MASSE	**450400**
15982	BU-SP	**416865**!
15982769	GMC	370003A
15982869	GMC	370003A
1599	ALOY	9912
15990004	GMC	370008A
15992A	MASSE	450516
15993A	MASSE	**472015**!
15994	OLIVE	450129
15994	OLIVE	**472826**!
15995	C-R	7456N
15A10671	MINNM	204008
15A11584	MINNM	**470565**!
15A14589	MINNM	**472258**!
15A14589	WHITE	**472258**!
15A15742	MINNM	**473473**
15A16195	MINNM	**471224**!
15A72	MINNM	**471750**!
15A8155	MINNM	**415116**
15FM41A1	FAIRB	472951
15FM41A1	FAIRB	**474252**
15FM41A2	FAIRB	**473016**!
15FM41A4	FAIRB	**416273**!
15G47	OSHKO	**471689**!
15HU-027-008	GKN	714675
15JG-1	KEN	**415991**!
15JG-1	KEN	**415991**
15JG-2	KEN	**471570**!
15JG-3	KEN	240731
15JG-4	KEN	**417349**
15JG-5	KEN	**471224**
15JG-6	KEN	415983N!
15JG7	KEN	456744N
15M-11	SPICE	340356
15M-2	SPICE	340815
15M1	SPICE	**472179**
15P562	MINNM	**473467**!
15X24X7SC	TRSCM	15X24X7
15X24X7TC	TRSCM	15X24X7
15X25X5	ISP	15X25X5!
15X25X5ASN	ISP	15X25X5
15X25X6SC	TRSCM	15X25X6
15X25X6TC	TRSCM	15X25X6
15X25X7SC	TRSCM	15X25X7
15X25X7TC	TRSCM	15X25X7
15X26X7SC	TRSCM	15X26X7
15X26X7TC	TRSCM	15X26X7
15X28X7SC	TRSCM	15X28X7
15X28X7TC	TRSCM	15X28X7
15X30X7SB	TRSCM	15X30X7
15X30X7SC	TRSCM	15X30X7
15X30X7TC	TRSCM	15X30X7
15X32X7AN(35)	ISP	15X32X7
15X32X8SC	TRSCM	15X32X8
15X32X8TC	TRSCM	15X32X8
15X35X7SC	TRSCM	15X35X7
15X35X7TC	TRSCM	15X35X7
15X37X6SC	TRSCM	15X37X6
15X37X6TC	TRSCM	15X37X6
15X484	MINNM	**473450**!
16	WGEAR	**471692**!
16-5600-6	CNTIR	S-1012N
16-5601-4	CNTIR	S-1126
16-5602-2	CNTIR	S-1174
16-5603-0	CNTIR	S-1177
16-5604-8	CNTIR	S-1181
16-5605-6	CNTIR	S-1183
16-5606-4	CNTIR	S-1188
16-5607-2	CNTIR	S-1196
16-5608-0	CNTIR	S-1205N
16-5609-8	CNTIR	S-1213N
16-5610-2	CNTIR	S-1217
16-5611-0	CNTIR	S-1883
16-5612-8	CNTIR	S-1884
16-5613-6	CNTIR	S-1932
16-5614-4	CNTIR	S-1948
16-5615-2	CNTIR	S-1950
16-5616-0	CNTIR	S-1953
16-5617-8	CNTIR	S-1955
16-5618-6	CNTIR	S-1956
16-5619-4	CNTIR	S-1960
16-5620-8	CNTIR	S-1962
16-5621-6	CNTIR	S-1973
16-5622-4	CNTIR	S-1984
16-5623-2	CNTIR	S-1987
16-5624-0	CNTIR	S-1992

! Industrial Size/Type * Minor Width Difference

= The U.S. customer service number is 877-4-TIMKEN. The Canadian customer service numbers are 800-565-4927 (English) and 800-565-0438 (French-Canadian).

Mfr. No.	Name	Zero Duplication or Recommended Industrial
16-5625-8	*CNTIR*	S-1994
16-5626-6	*CNTIR*	S-2002
16-5627-4	*CNTIR*	S-2007
16-5628-2	*CNTIR*	S-203013
16-5629-0	*CNTIR*	S-203025
16-5630-4	*CNTIR*	S-204013
16-5631-2	*CNTIR*	S-204017
16-5632-0	*CNTIR*	S-204038
16-5633-8	*CNTIR*	S-2043
16-5634-6	*CNTIR*	S-2081
16-5635-4	*CNTIR*	S-2146
16-5636-2	*CNTIR*	S-223420
16-5637-0	*CNTIR*	S-223542
16-5638-8	*CNTIR*	S-223543
16-5639-6	*CNTIR*	S-223605
16-5640-0	*CNTIR*	S-223830
16-5641-8	*CNTIR*	S-223840
16-5642-6	*CNTIR*	S-224015
16-5643-4	*CNTIR*	S-224026
16-5644-2	*CNTIR*	S-224235
16-5645-0	*CNTIR*	S-224772
16-5646-8	*CNTIR*	S-224820
16-5647-6	*CNTIR*	S-225110
16-5648-4	*CNTIR*	S-225225
16-5649-2	*CNTIR*	S-225230
16-5650-6	*CNTIR*	S-226285
16-5651-4	*CNTIR*	S-2286
16-5652-2	*CNTIR*	S-2506
16-5653-0	*CNTIR*	S-2655
16-5654-8	*CNTIR*	S-2658
16-5655-6	*CNTIR*	S-2692
16-5656-4	*CNTIR*	S-2955
16-5657-2	*CNTIR*	S-3087
16-5658-0	*CNTIR*	S-3173
16-5659-8	*CNTIR*	S-3195
16-5660-2	*CNTIR*	S-3214
16-5661-0	*CNTIR*	S-3227
16-5662-8	*CNTIR*	S-331107N
16-5663-6	*CNTIR*	S-331227H
16-5664-4	*CNTIR*	S-331228H
16-5665-2	*CNTIR*	S-334111
16-5666-0	*CNTIR*	S-3357
16-5667-8	*CNTIR*	S-3459
16-5668-6	*CNTIR*	S-3543
16-5669-4	*CNTIR*	S-3604
16-5670-8	*CNTIR*	S-3622
16-5671-6	*CNTIR*	S-3655
16-5672-4	*CNTIR*	S-3677
16-5673-2	*CNTIR*	S-3723
16-5674-0	*CNTIR*	S-3743
16-5675-8	*CNTIR*	S-3747
16-5676-6	*CNTIR*	S-3771
16-5677-4	*CNTIR*	S-3896
16-5678-2	*CNTIR*	S-3946
16-5679-0	*CNTIR*	S-4072N
16-5680-4	*CNTIR*	S-4099
16-5681-2	*CNTIR*	S-410308
16-5682-0	*CNTIR*	S-412920
16-5683-8	*CNTIR*	S-4131
16-5684-6	*CNTIR*	S-413248
16-5685-4	*CNTIR*	S-413470
16-5686-2	*CNTIR*	S-4148
16-5687-0	*CNTIR*	S-415009
16-5688-8	*CNTIR*	S-415960
16-5689-6	*CNTIR*	S-4160
16-5690-0	*CNTIR*	S-416273
16-5691-8	*CNTIR*	S-417158
16-5692-6	*CNTIR*	S-4249
16-5693-4	*CNTIR*	S-4250
16-5694-2	*CNTIR*	S-4278
16-5695-0	*CNTIR*	S-4370N
16-5696-8	*CNTIR*	S-442109
16-5697-6	*CNTIR*	S-442251
16-5698-4	*CNTIR*	S-442874
16-5699-2	*CNTIR*	S-444116
16-5700-8	*CNTIR*	S-455086
16-5701-6	*CNTIR*	S-470331N
16-5702-4	*CNTIR*	S-470361
16-5703-2	*CNTIR*	S-470460
16-5704-0	*CNTIR*	S-471224
16-5705-8	*CNTIR*	S-471271
16-5706-6	*CNTIR*	S-471424
16-5707-4	*CNTIR*	S-473468
16-5708-2	*CNTIR*	S-473677
16-5709-0	*CNTIR*	S-4740
16-5710-4	*CNTIR*	S-474134
16-5711-2	*CNTIR*	S-4762N
16-5712-0	*CNTIR*	S-4795V
16-5713-8	*CNTIR*	S-4899
16-5714-6	*CNTIR*	S-493291
16-5715-4	*CNTIR*	S-493637
16-5716-2	*CNTIR*	S-494117
16-5717-0	*CNTIR*	S-494123
16-5718-8	*CNTIR*	S-51098
16-5719-6	*CNTIR*	S-5121
16-5720-0	*CNTIR*	S-5131
16-5722-6	*CNTIR*	S-5604
16-5723-4	*CNTIR*	S-5697
16-5724-2	*CNTIR*	S-5778
16-5725-0	*CNTIR*	S-6358
16-5726-8	*CNTIR*	S-6712NA
16-5727-6	*CNTIR*	S-6815
16-5728-4	*CNTIR*	S-6840S
16-5729-2	*CNTIR*	S-6954S
16-5730-6	*CNTIR*	S-7022S
16-5731-4	*CNTIR*	S-7038SA
16-5732-2	*CNTIR*	S-7044NA
16-5733-0	*CNTIR*	S-710005
16-5734-8	*CNTIR*	S-710067
16-5735-6	*CNTIR*	S-710072
16-5736-4	*CNTIR*	S-710073
16-5737-2	*CNTIR*	S-710091
16-5738-0	*CNTIR*	S-710092
16-5739-8	*CNTIR*	S-710096
16-5740-2	*CNTIR*	S-710101
16-5741-0	*CNTIR*	S-710105
16-5742-8	*CNTIR*	S-710110
16-5743-6	*CNTIR*	S-710166
16-5744-4	*CNTIR*	S-710168
16-5745-2	*CNTIR*	S-722108
16-5746-0	*CNTIR*	S-722109
16-5747-8	*CNTIR*	S-7300S
16-5748-6	*CNTIR*	S-7412S
16-5749-4	*CNTIR*	S-7687S
16-5750-8	*CNTIR*	S-7692S
16-5751-6	*CNTIR*	S-7781S
16-5752-4	*CNTIR*	S-7934S
16-5753-2	*CNTIR*	S-8121S
16-5754-0	*CNTIR*	S-8181NA
16-5755-8	*CNTIR*	S-8312
16-5756-6	*CNTIR*	S-8430S
16-5757-4	*CNTIR*	S-8460N
16-5758-2	*CNTIR*	S-8516N
16-5759-0	*CNTIR*	S-8594S
16-5760-4	*CNTIR*	S-8610
16-5761-2	*CNTIR*	S-8611N
16-5762-0	*CNTIR*	S-8660S
16-5763-8	*CNTIR*	S-8695S
16-5764-6	*CNTIR*	S-8704S
16-5765-4	*CNTIR*	S-8705S
16-5766-2	*CNTIR*	S-8792S
16-5767-0	*CNTIR*	S-8835S
16-5768-8	*CNTIR*	S-8871
16-5769-6	*CNTIR*	S-8974S
16-5770-0	*CNTIR*	S-9015S
16-5771-8	*CNTIR*	S-9150S
16-5772-6	*CNTIR*	S-9178S
16-5773-4	*CNTIR*	S-9316
16-5774-2	*CNTIR*	S-9406S
16-5775-0	*CNTIR*	S-9449
16-5776-8	*CNTIR*	S-9569S
16-5777-6	*CNTIR*	S-9613S
16-5778-4	*CNTIR*	S-9845
16-5779-2	*CNTIR*	S-9864S
16-5780-6	*CNTIR*	S-9912
16-D19	*LK-BT*	416556!
16-D19	*LK-BT*	**472157**
16-D20	*LK-BT*	**471192**
160	*C-R*	BS1280
1600149	*WHITE*	408
1600194	*WHITE*	408
1600255	*WHITE*	**412119!**
16003	*C-R*	710444
1600780	*WHITE*	408
1601	*C-R*	**471649!**
16011	*C-R*	481650*
16012	*C-R*	**471651***
16012	*CLIN*	470328
16012	*CLIN*	**481213!**
16012LUP	*JN-MN*	**473239!**
160132	*ALLCH*	415146!
160132	*ALLCH*	**415991**
16014	*C-R*	**471652***
16014L	*C-R*	**471652**
16014M1	*C-R*	**471652**
16015	*C-R*	710241
16017	*C-R*	710402
16018510A	*HARWA*	160X185X10
16019	*C-R*	224068
160196	*JEFF*	**417134**
1601M1	*C-R*	**471649!**
16020	*EATON*	**474276**
16020	*FULLE*	**474276**
16021	*C-R*	474133
16022	*C-R*	224015
16022A	*MASSE*	**455079!**
16023	*C-R*	710114
16025	*C-R*	**481644***
1602537	*WHITE*	**472157**
16026	*C-R*	**480844***
16027	*C-R*	473414*
16027	*C-R*	710114
160273	*HARRI*	**415234!**
1602788	*WHITE*	**412119*=**
16028	*C-R*	**471646**
16028M1	*C-R*	**471646**
16030	*C-R*	**471647***
16031	*C-R*	**471648***
16032	*C-R*	1950
16034	*C-R*	1180
16034	*C-R*	41X55X7!
160357A	*WHITE*	**473232!**
16036	*C-R*	1180
16037	*C-R*	710114
16038	*C-R*	710141
16039	*C-R*	**473694**
1604	*C-R*	HU057A
16040	*C-R*	8477S
16041	*C-R*	710220
16043	*C-R*	4143
160433A	*OLIVE*	**417343!**
160433A	*WHITE*	**417343!**
16044	*C-R*	8835S
16044G	*P-C*	TCS45472
16046	*C-R*	**473694!**
16047	*C-R*	**472419**
1605	*C-R*	HU058A
160502	*JEFF*	**471551!**
16052	*C-R*	**473230!**
160524A	*OLIVE*	**416921!**
16053	*C-R*	**473230!**
16053	*CLIN*	**474278!**
160530A	*WHITE*	240319
160539	*AMC*	**472560N!**
1605397	*GMC*	9049
1605397	*GMC*	9049N
16054	*C-R*	**481181!**
160540	*AMC*	**474278!**
160546	*JEFF*	**416865!**
16054G	*P-C*	TCS45472
16058	*C-R*	**473230!**
16060	*C-R*	204017
160603	*CUMMI*	**470954**
16061	*C-R*	1999
16061	*C-R*	**473230!**
16062	*C-R*	**473230!**
16063	*C-R*	205017
16064	*C-R*	204017
16064G	*P-C*	TCS45472
16066	*C-R*	205017*
16067	*C-R*	204017*
16068	*TRMBL*	733067
16069	*C-R*	204017
16069	*C-R*	205017
160692H1	*HOUGH*	**417555!**
16070	*C-R*	**473231***
16070	*C-R*	**473231!**
16071	*C-R*	**473231**
16071SA	*SPG*	**416071**
16072	*C-R*	**473231**
16073	*C-R*	**473231**
16076	*C-R*	5115
160763A	*OLIVE*	**410308!**
160763A	*OLIVE*	473468
16078	*C-R*	**473230**
16079	*C-R*	**473231!**
16079LDS	*JN-MN*	**415683***
1608	*C-R*	HU065A
160809R91	*IH*	5405
16080LDS	*JN-MN*	415656
16081	*C-R*	**473231**
16081M	*DIA*	**471271!**
16082	*C-R*	**473231**
16083	*C-R*	710204
16084	*C-R*	**473231!**
16085	*C-R*	1192
16085	*C-R*	**473231**
16086	*C-R*	**473231!**
16088	*C-R*	**473231!**
16089	*C-R*	**473231**
16090	*C-R*	**473231!**
16091	*C-R*	**473231***
16092	*C-R*	**473231!***
16097	*C-R*	**473231**
16098	*C-R*	**473231**
1609948C1	*IH*	370003A
160X185X10	*SIMRT*	160X185X10
160X185X10SC	*TRSCM*	160X185X10
160X185X10TC	*TRSCM*	160X185X10
160X190X15SC	*TRSCM*	160X190X15
160X190X15TC	*TRSCM*	160X190X15
160X200X12AN	*ISP*	160X200X12
160X200X15SC	*TRSCM*	160X200X15
160X200X15TC	*TRSCM*	160X200X15
161	*DALMO*	**350435**
16100	*MICH*	**471442!**
16100	*UNIVE*	**471442!**
1610095	*AMC*	**471570!**

! Industrial Size/Type * Minor Width Difference

= The U.S. customer service number is 877-4-TIMKEN. The Canadian customer service numbers are 800-565-4927 (English) and 800-565-0438 (French-Canadian).

Mfr. No.	Name	Zero Duplication or Recommended Industrial
16101	C-R	473231!
1610187M1	MASSE	415995!
1610187M1	MASSE	415995!
161019	H-S	415303!
161020A	OLIVE	415995!
16103	C-R	473367!
16103	C-R	473367
16103550	FREIG	471870!
16104	NPG	4370N
161052	ACF	340771
161057	H-S	472924!
161058	H-S	471267!
161075	JEFF	472164!
161076	JEFF	470898
161077	JEFF	455311
161079	JEFF	415995!
16108	C-R	473367
161080	H-S	470625!
1611	C-R	471649!
161100A	OLIVE	340724!
1611035	WOOL	416345!
1611035	WOOL	455033
161106	H-S	471466!
16111	C-R	481650*
16112	C-R	471651*
161121	JEFF	470605!
161124	JEFF	415995!
161125	JEFF	415991
161125	JEFF	455146!
16113	C-R	473367!
16113	C-R	473367
16114	C-R	471652
16115	JNSON	471224!
16116	C-R	710102
16117	C-R	473367*
16117	C-R	473367
16118	C-R	473367*
16118	C-R	473367
16119	C-R	473367!
1611M1	C-R	471649!
1611M1	MASSE	471649!
16120	C-R	473367V
16121	C-R	473367!
16121	C-R	473367*
1612170M1	MASSE	200188=
1612172M1	MASSE	416125!
1612223	CHRYS	471646!
161222SC	TRSCM	1181
16125	C-R	481644*
16125	MICH	471472!
16125	UNIVE	471472!
161255SZ	TRSCM	8835S
16126	C-R	471645*
16127	C-R	473414*
16128	C-R	471646
1612823C1	IH	370131A
16128M1	C-R	471646
16130	C-R	471647*
16131	C-R	471648*
161310	H-S	417210!
16132	C-R	473367!
16132	C-R	473367
161323	AMC	471827
1613239M1	MASSE	40097S
16134	C-R	473367
1613409	CHRYS	6840S
16137	C-R	473367!
16137	C-R	473367
16137	MICH	471549!
16137	UNIVE	471549!
16138	C-R	473367!
16138	C-R	473367
16141A	MASSE	470625!
161452	H-S	240119
1614578	GMC	3907
1614579	GMC	3907
16146	C-R	4762N
16148	C-R	473367
16150	C-R	473367!
16150	C-R	473367
1615116	GMC	3606
16153	C-R	473367
16155	CLAYN	471271!
16156	CHRYS	7300S
16156	NEWPR	2465
16159LPD	JN-MN	471504
161673	Y-T	417344!
16168	C-R	473367
161686	EATON	100495
161686	EATON	417349
161686	Y-T	417349
16173	C-R	473367!
16173	C-R	473367
16177	EATON	412473=
16177	FULLE	412473!
16178	C-R	473367!
16178	C-R	473367
161781	CUMMI	473016=
16179	C-R	473367!
16179	C-R	473367
16179STLUP	JN-MN	455966
16180	C-R	471829*
16184	C-R	473367
16184	C-R	473367!
16186	C-R	471829
1618683	CHRYS	3103!
16188	FMC	473227!
16188	SIDEW	473227
16189	C-R	471829
161919H2	IH	473231!
16199	C-R	471829*
161H1	C-R	471649!
162	C-R	5453
162	DALMO	350364
16201	C-R	471829*
16204	C-R	471829
162052	JEFF	471689!
162075	AMC	473435
162075	JEFF	471870!
162080	AMC	473435
16209	C-R	6513*
1620D5	WHITE	412119
1621	C-R	471649!
16210	C-R	471829*
16211	C-R	481650
16211407.5	TROS	203016
16211607.5	TROS	6906S
162116X07.5C	TROS	6906S
162118	AMC	473367!
162118	AMC	473367
16212	C-R	471651
162128	CUMMI	415458
162212SB	TRSCM	481181!
16214	C-R	471652
16217	C-R	473367
16217	C-R	473367!
16219	C-R	473367!
16219	C-R	473367
1621M1	C-R	471649!
1621Y2	C-R	471649!
1622222	GMC	9599S
16223	C-R	473367!
16223	C-R	473367
162231	JEFF	474253
16223TB	TRSCM	473230!
16223VSB	TRSCM	473230
16225	C-R	481644
16226	C-R	471645
1622631	GMC	710263
16227	C-R	473414
16228	C-R	471646
162285	LEYLD	330385!
16228B	C-R	471646
162290	JEFF	471231!
16230	C-R	471647
16231	C-R	471648
16233TB	TRSCM	473231!
16234VHY	TRSCM	205017
16235	TRMBL	370023A
16235SA	TRSCM	473231
162389	JEFF	472439
162402	JEFF	415867
162407A	HARWA	16X24X7
16240J	DIA	472144!
16241LUP	JN-MN	473235!
16242LDS	JN-MN	417316!
16243TB	TRSCM	473367
16244	C-R	6356
162443TB	TRSCM	471829
16245	C-R	473010!
16246	C-R	473010!
16247	C-R	473010
16249	C-R	473010
1624D	GOODM	472397!
1625	CHEL	415449!
1625-10698LPD	JN-MN	55103S
1625-15473STLUP	JN-MN	509756=
16250	C-R	473010
162503TB	TRSCM	473234!
162509	JEFF	417082
16251	C-R	473010!
16252	C-R	473010!
1625240	C-R	509756=
16253	C-R	473010
1625380	C-R	55103S
16253TB	TRSCM	473010!
16253VTB	TRSCM	473010
16254	C-R	473010!
162550	C-R	55103S
16257	C-R	473010
16257F	DIA	472924!
16258	C-R	473010
1625840M1	MASSE	415150!
162601	JEFF	471554!
162602	JEFF	472810!
162603	JEFF	471549!
16262	C-R	714569
16263	C-R	473010!
16263J	DIA	417355!
16263TB	TRSCM	473232!
16264	C-R	473010!*
16265	C-R	473010!*
1626520UB	TRSCM	200886
162668	JEFF	471570!
162683SB	TRSCM	481864
16268SS	JN-MN	411253!
16269LDS	JN-MN	417210!
1627159M1	MASSE	311189
16272SB	TRSCM	40286
16273TB	TRSCM	473236!
16275	C-R	473010!
1627806	GMC	710075
1627827	GMC	710263
16279	TRMBL	HU009A
16280	C-R	473010
16281	C-R	473010
16283TB	TRSCM	473444!
16284	C-R	204500!
16284	C-R	291099*
16285	C-R	6356
16286	C-R	200641
16287	C-R	8835S
162874A	OLIVE	473517=
162874A	WHITE	473517*=
162875A	OLIVE	410496=
162875A	WHITE	410496=
162876A	OLIVE	472150=
162876A	WHITE	472150=
16289	C-R	204500*
16289	C-R	291099*
16289	C-R	4763S
16291	C-R	473232!
16293	C-R	473232!
16295	C-R	714679
16296	C-R	473232
16297	C-R	473232
162Z28	C-R	471646!
163	DALMO	50199S!
163	DALMO	6863S!
16303SA	TRSCM	414268
163062A	OLIVE	455134=
163062A	WHITE	455134!
16306LDS	JN-MN	415219
16307	C-R	473232!*
163075	AMC	473435
16308	C-R	473232!*
16310004	TROS	471744!
16311207	TROS	473426
16311604	TROS	471750!
16311607	TROS	471750!
16311608	TROS	471750!
16311LUP	JN-MN	417602!
16313	MCCOR	5587
16313204	TROS	474276
16313207	TROS	474276!
16313208	TROS	474276!
16314	C-R	473232!
16315	C-R	473232!
163196	US-EL	476470!
163196	US-EL	476470
163207B	HARWA	16X32X7
16322	C-R	40568S
16325	C-R	473232!
16327	C-R	473232
16328	C-R	473232
163295	WOODB	471652
16330	C-R	40568S
16331	C-R	473232!
16332	C-R	473232!
16333	C-R	481864
16334	C-R	481864
16335	C-R	473232!
163351	PACIF	470334!
163353	PACIF	55329=
16336	C-R	473232!
16337	C-R	481864*
16339	C-R	481864
163391	PACIF	480581
163392	PACIF	416041
16340	C-R	481864
16341	PACIF	341022
16342	C-R	5727
163421	PACIF	416267!
1634210	PACIF	417601
1634211	PACIF	417605
1634212	PACIF	415482
1634215	PACIF	415962
1634216	PACIF	471504

! Industrial Size/Type * Minor Width Difference

= The U.S. customer service number is 877-4-TIMKEN. The Canadian customer service numbers are 800-565-4927 (English) and 800-565-0438 (French-Canadian).

Mfr. No.	Name	Zero Duplication or Recommended Industrial
1634217	PACIF	**417357**
1634219	PACIF	**471466**!
163422	PACIF	**413246**
1634220	PACIF	**415001**!
1634221	PACIF	**472258**!
1634223	PACIF	**415043**
1634225	PACIF	**416154**!
1634226	PACIF	**415867**
1634227	PACIF	**417484**!
163423	PACIF	**416664**!
163424	PACIF	**417316**!
163425	PACIF	**417134**
163426	PACIF	**476470**!
163426	PACIF	**476470**
163428	PACIF	**416380**!
163429	PACIF	**417254**
1634310	PACIF	**411376**!
1634311	PACIF	**455079**!
1634312	PACIF	**415458**!
1634313	PACIF	**415984**!
1634314	PACIF	**417316**!
1634315	PACIF	455310
1634316	PACIF	**418028**
1634316	PACIF	455137!
1634317	PACIF	**418028**
1634318	PACIF	**417191**
1634318	PACIF	455165!
1634319	PACIF	**415437**
1634320	PACIF	**415027**
1634320	PACIF	**415027**!
1634321	PACIF	**415379**!
1634321	PACIF	**415379**
1634322	PACIF	**416339**
1634323	PACIF	**417366**!
1634324	PACIF	**415034**!
1634325	PACIF	**417357**
1634325	PACIF	455192!
1634326	PACIF	**416891**!
1634327	PACIF	**416154**!
1634328	PACIF	**415058**
1634331	PACIF	455290
1634332	PACIF	**417555**!
1634333	PACIF	**415072**
1634334	PACIF	**455480**!
1634335	PACIF	**417601**
1634336	PACIF	**417605**
1634337	PACIF	**416706**!
1634339	PACIF	**450621**
1634342	PACIF	**470088**
1634348	PACIF	**416892**!
1634349	PACIF	**416239**!
163435	PACIF	**470596**
1634351	PACIF	**415294**!
1634352	PACIF	**417600**
1634358	PACIF	**471413**!
163436	PACIF	**471504**!
1634362	PACIF	455596=
163437	PACIF	**472164**!
163438	PACIF	**473313**
163439	PACIF	**412027**
16344	C-R	5727
1634631	SPICE	**470774**!
1634632	SPICE	**413246**
16349	C-R	**474274**
16350	C-R	**474274**
1635662	PACIF	455596=
16358	C-R	40286
16359	SIDEW	**473231**!
16362	C-R	40286
163625A	WHITE	J1119
16364	C-R	**474274**!
163654	CUMMI	425RR
16365LUP	JN-MN	**417020**
16367	C-R	**474274**
16368	C-R	**474274***
16368	C-R	**474274**
16370	EATON	476424N
16371LUP	JN-MN	**471141**!
16373	C-R	450275
16374	C-R	450275*
16374	TRMBL	HU013A
1637536-24	SKF	370106A*
163785	CUMMI	**471984**=
16385	C-R	**450819***
163871	HYST	**417487**!
163871	HYST	**417487**
163887	GMC	**415035**!
163887	GMC	**415035**
16389	C-R	**473444**
16390	C-R	**473444**
163912	HYST	**473459**
16392	C-R	4674N
163A11406.5	TROS	203025
163A11606.5	TROS	203029
163C13204	TROS	41257!
16405	C-R	**473444**
16406	C-R	**473444**!*
164063	ALLCH	**417597**
16416	C-R	450415
16416	NPG	710046
16422	C-R	**414268**!
16422	C-R	**414268***
164263PTB	TRSCM	8620N
16426SS	JN-MN	50199S!
16426SS	JN-MN	6863S!
16428	C-R	450335
16431	C-R	450335
16432LUP	JN-MN	228010
16433LUP	JN-MN	110X130X12
16435	C-R	411978N=
16436	C-R	450540*
164368	ALLCH	**327303**!
16438	C-R	450467
1643G	OSHKO	**415991**
1643G	OSHKO	455146!
16440	C-R	450467
16447LUP	JN-MN	**471270**!
164513R1	NAVST	425RR
16452LUP	JN-MN	**472016**!
164544	JEFF	**416332**!
164567A	MINNM	**330385**
164639	HYST	JV1166
164648	JEFF	**476838**!
16465LDS	JN-MN	**473205**!
164662A	OLIVE	**473459**
16467LDS	JN-MN	**473235**!
16472LDS	JN-MN	**416294**!
1647308	GMC	710262
1647311	GMC	710263
1647477	GMC	710261
1648	ALOY	4148
1648	ALOY	**471424**!
164848	WAUKE	J1129
164849A	WAUKE	**455134**!
164855	HOUGH	**472016**
164855H1	HOUGH	**472016**
1648957	AMC	**411253**!
164918	JEFF	**473214**
164919	JEFF	**471795**
16492	C-R	42X56X7*
16493	C-R	42X56X7V!
16494	C-R	224220
16494	C-R	3774
16494	C-R	710386
16495	C-R	42X55X8*
1649628C1	IH	**416158**
1649628C1	NAVST	386025A
165	C-R	BS5974
1650	DURA	**471224**!
16500	C-R	8620N*
1650011	DURA	**473446**
16502	C-R	224210
16503	C-R	1214
16503	C-R	1214N
16503	C-R	42X55X8!
165035	HYST	**473229**
1650397	WGEAR	240462
16504	C-R	3774
16504	C-R	42X56X7!
16504	C-R	710386
16505	C-R	224220
16505	C-R	42X56X7!
16506	C-R	494117
16507	C-R	3051N
16508	C-R	710097
16509	C-R	224235
16509	C-R	42X58X7!
16511	C-R	224215
16511	C-R	474241V
165118	ALLCH	**471689**!
16512	C-R	224210
165122A	OLIVE	**416921**!
165122A	WHITE	**416921**!
165123A	OLIVE	**416557**
165123A	WHITE	415172
165123A	WHITE	**416332**!
1651279C91	IH	100495
1651279C91	IH	4810V
1651280C91	IH	**415995**
1651281C91	IH	712000
16513	C-R	42X55X7
16514	C-R	1953
16515	C-R	1953
16515	C-R	2025
16515	C-R	42X60X7!
16516	C-R	2642
16517	C-R	2025
16517	C-R	42X60X10V!
165175A	OLIVE	**471272**=
165175A	WHITE	**471272**=
16518	C-R	224250
16519	C-R	224250
16519	C-R	42X62X8!
16520	SIDEW	**473458**!
16522	C-R	224254
16523	C-R	224250
16523	C-R	224252*
16523	C-R	224253
16523	C-R	42X62X8!
16523	C-R	42X62X8V!
16524	OLIVE	**471224**!
16525	C-R	224255
16525	C-R	42X65X10!
16525LDS	JN-MN	415052
165263PTB	TRSCM	7457N
16527	C-R	224255
16527	C-R	42X65X10V!
16528	C-R	224266
16528	EATON	**471424**=
16529	C-R	224252
16529	C-R	224253
16529	EATON	J1107
16530	C-R	42X68X10
16530LDS	JN-MN	**416383**
16531	C-R	224200
16531	SIDEW	**473231**
16532	C-R	450260
16533	C-R	2025*
16533LUP	JN-MN	**451948**
16534	C-R	224255*
16534	C-R	42X65X10*
16535	C-R	42X70X10
16535LUP	JN-MN	**472150**
16536	C-R	710442
16536LUP	JN-MN	**410825**
16537	C-R	42X65X10
16539LUP	JN-MN	**455566**
16540	C-R	450260
16540LUP	JN-MN	**456305**
16541	C-R	450260
16541LUP	JN-MN	**416294**!
16542	C-R	710179
16542LUP	JN-MN	**417495**
1654330C1	IH	370023A
16543LUP	JN-MN	**415498**
16544LUP	JN-MN	**455189**
16545	C-R	7457N
16545LUP	JN-MN	**415958**
16546	C-R	710186
165469	SPICE	**410825**
16546LUP	JN-MN	**417505**
16547	C-R	7457N
16547LUP	JN-MN	417515
16548	C-R	224235
1654875C1	IH	710006
1654887C92	IH	39930
16548LUP	JN-MN	455197N
16549	C-R	710517
16549LUP	JN-MN	**455576**!
1654G	OSHKO	**415088**!
1654G	OSHKO	**415088**
165510	JEFF	**473016**!
1655102C1	IH	370124A
16552	C-R	42X68X8
16553	C-R	710207
16554	C-R	42X72X10V
16554LUP	JN-MN	455476*
16555	C-R	224270
16555	C-R	42X72X10!
16556	C-R	450073*
16558	C-R	42X72X8
16559	C-R	452086
16561	C-R	42X72X10
165618	HOUGH	**471504**
16562	C-R	450284=
16563	C-R	450284=
16564	C-R	710245
16564	YARD	**471538**!
16565	C-R	4615V
16565	C-R	710286
16567	C-R	7300S
16568	YARD	340724!
165756A	OLIVE	JV980=
165756A	WHITE	JV980=
165757A	WHITE	200870
16578	C-R	710502
16579	MYERS	**473197**
16590	C-R	42X80X10
16594	C-R	710133
165947R91	IH	**471341**!
165949R91	IH	**415483**!
16597	TRMBL	370012A
16598LUP	JN-MN	**416135**!
16599	C-R	4099
165P3	WHITE	7107A=
165X190X13CS	ISP	165X190X13
166-101	PYUNG	223606
166-102	PYUNG	228008

! Industrial Size/Type * Minor Width Difference

= The U.S. customer service number is 877-4-TIMKEN. The Canadian customer service numbers are 800-565-4927 (English) and 800-565-0438 (French-Canadian).

Mfr. No.	Name	Zero Duplication or Recommended Industrial
166-103	*PYUNG*	1108
166021	*SIMPL*	**471231**!
16605LUP	*JN-MN*	456641
16607	*EATON*	**473473**
16610	*C-R*	**473234**!
1661230	*CHRYS*	5481$
166202	*AMC*	473435
16623	*NPG*	**472572**
16624	*BU-SP*	**415991**
16624	*BU-SP*	**415991**!
1663	*ALOY*	**471271**!
166300	*NEHO*	291099
16636LUP	*JN-MN*	**415483**
166437R91	*IH*	456618
166488A	*WHITE*	**410496**!
16650	*C-R*	353141!*
16650	*C-R*	6084
166503	*SPERY*	**471750**!
1665375C91	*IH*	4624V
16655	*C-R*	205017
1665544C1	*IH*	710211
16656	*C-R*	**473317**
16657	*C-R*	**473317**
16657F	*DIA*	**415960**
16658SS	*JN-MN*	**416664**!*
16659	*C-R*	**473317**
16660	*C-R*	203008
166600A	*WHITE*	**471272**=
16660M	*CLARK*	417548
16662	*C-R*	204008
16665	*C-R*	203008
16667	*C-R*	204008
16668	*C-R*	**473317**
1666808	*CHRYS*	**470898**!
16669	*C-R*	**473233**!
16675	*C-R*	**473445**
16675	*MYERS*	**471271**!
1667583	*CHRYS*	**417484**!
1667599	*CHRYS*	**416500**
16676	*C-R*	**473445**
1667620	*CHRYS*	**415449**!
1667652	*CHRYS*	**471267**!
1667670	*CHRYS*	**417484**!
1667704	*CHRYS*	**471570**!
1667863	*CHRYS*	**410308**
16679	*C-R*	**473445**
16680	*C-R*	**473445**
1668181	*CHRYS*	**410737**!
1668311	*FOOTE*	**471570**!
16683131	*FOOTE*	**472572**!
16683141	*FOOTE*	**472144**!
16683181	*FOOTE*	450313
16683201	*FOOTE*	**471271**!
1668321	*FOOTE*	**450039**
16683211	*FOOTE*	**455079**!
16683231	*FOOTE*	**416921**!
16683241	*FOOTE*	**416956**
16683251	*FOOTE*	**417349**
16683261	*FOOTE*	**415995**!
16683301	*FOOTE*	**415027**!
16683301	*FOOTE*	**415027**
1668331	*FOOTE*	**471764**!
16683321	*FOOTE*	**455134**!
16683331	*FOOTE*	**416888**!
16683341	*FOOTE*	**415351**!
1668341	*FOOTE*	**471795**
1668351	*FOOTE*	**473211**!
1668361	*FOOTE*	**471192**
1668371	*FOOTE*	**473215**!
1668391	*FOOTE*	**473225**!
1668489	*CHRYS*	**471267**!
16684C	*DIA*	**415458**!
16684W	*DIA*	**473464**!
16684W	*DIA*	**473464**
166850	*DIA*	5M867
16685C	*DIA*	5M867
16689	*C-R*	**473445**
16692	*C-R*	**473445***
16693	*TRMBL*	AR10+370020A
16696	*BU-SP*	**471224**!
16696	*C-R*	**473445**
1669724	*CHRYS*	**470898**!
1669851	*CHRYS*	**410308**!
16699	*C-R*	**473445***
167	*C-R*	BS5974
167-033	*PYUNG*	228030
167-037	*PYUNG*	1216N
167-038	*PYUNG*	55X78X10
167-039	*PYUNG*	1973
167-071	*PYUNG*	1126
167-072	*PYUNG*	4990
167-073	*PYUNG*	710323
167-076	*PYUNG*	221620
167-078	*PYUNG*	2007N
167-081	*PYUNG*	1990
167-094	*PYUNG*	710316
167-096	*PYUNG*	1932
167-098	*PYUNG*	2007N
167-124	*PYUNG*	2011
167-132	*PYUNG*	223801
16700	*C-R*	**473445***
1671152C2	*IH*	**415035**
16713	*C-R*	**473234**!
167131H1	*IH*	**476470**
1671340	*CHRYS*	6960
167141	*BENDI*	340210
16715	*C-R*	**473234**
16716	*C-R*	**473234**
167176	*HYST*	**417602**!
1671763	*CHRYS*	**471827**
16719	*C-R*	**473234**
16719LDS	*JN-MN*	**472144**!
16720	*C-R*	**473234**!
16720LDS	*JN-MN*	**417555**!*
16725	*C-R*	2465
16725	*C-R*	7300S
167268H1	*HOUGH*	**474276**
16727	*C-R*	7300S
167302A	*WHITE*	8126S
1673373	*CHRYS*	**470487**!
16734	*C-R*	**473234**!
16735	*C-R*	712146
16738	*C-R*	**473234**
1673838	*CHRYS*	7886S
16739	*C-R*	**473234**
16740LDS	*JN-MN*	**415725**!
16743	*C-R*	40154S
167432	*US-EL*	**415449**!
16743LPD	*JN-MN*	**453182**
16744	*C-R*	**473234**!*
16747	*BU-SP*	**471472**!
16747	*C-R*	2146
16751LUP	*JN-MN*	**416130**!
16754	*C-R*	**470460***=
16757	*C-R*	9178S
16759	*C-R*	**473235**!
167591A	*WHITE*	455472=
16762LDS	*JN-MN*	**416229**
16763LDS	*JN-MN*	**417596**
16764	*C-R*	**473235**!
16765	*C-R*	**473235**!
16769C	*DIA*	**417238**
16769SS	*JN-MN*	50199S!
16769SS	*JN-MN*	6863S!
16780	*CHRYS*	714655
16780	*NPG*	714655
16781	*CHRYS*	**470530**
16781	*NPG*	**470530**
16785	*C-R*	**473235**!*
167980	*ALLCH*	50501
168-054	*PYUNG*	2146
168-055	*PYUNG*	710335
168-056	*PYUNG*	710222
168-057	*PYUNG*	712007
168-058	*PYUNG*	223240
168-060	*PYUNG*	4244
168-100	*PYUNG*	224020
168-111	*PYUNG*	227235
168-112	*PYUNG*	3771
168-118	*PYUNG*	223543
168-120	*PYUNG*	474134
168-126	*PYUNG*	712007
168-127	*PYUNG*	222025
168-128	*PYUNG*	223014
168-156	*PYUNG*	320583
168-158	*PYUNG*	710361
168-166	*PYUNG*	710404
168-171	*PYUNG*	712007
168-172	*PYUNG*	221710
168-1722	*PYUNG*	221710
168-173	*PYUNG*	228005
168-175	*PYUNG*	223014
168-176	*PYUNG*	223608
168-178	*PYUNG*	225010
168-181	*PYUNG*	225875
168-182	*PYUNG*	710401
168-183	*PYUNG*	710270
168-211	*PYUNG*	224460
168-212	*PYUNG*	712007
168-213	*PYUNG*	222025
168-214	*PYUNG*	228005
168-217	*PYUNG*	710417
168-225	*PYUNG*	224255
168-235	*PYUNG*	229005
168-236	*PYUNG*	223010
168-242	*PYUNG*	223018
168-243	*PYUNG*	227235
168-245	*PYUNG*	223750
168-249	*PYUNG*	228480
168-252	*PYUNG*	224810
168-253	*PYUNG*	223543
168-271	*PYUNG*	3771
16800	*C-R*	**473235**!
16801	*C-R*	**473235**!
16805	*C-R*	**473235**
16806	*C-R*	**473235**!
1680802C1	*IH*	380003A
1680802C1	*NAVST*	370003A
16811	*C-R*	**473235**
16816	*C-R*	**473235**!
16816LUP	*JN-MN*	**417533**
168175	*JEFF*	**415449**!
16818	*C-R*	200886
16820	*C-R*	7381S
16821	*C-R*	**474265**
168213KC	*TRSCM*	1183
168216	*WHITE*	**473459**
16822	*C-R*	**474265**
168224	*ALLCH*	**474276**!
168233TB	*TRSCM*	**473317**
168235VHY	*TRSCM*	203008
168235VHY	*TRSCM*	204008
168244SSB	*TRSCM*	**473445**
168255TB	*TRSCM*	2146
168255TB	*TRSCM*	**470460**
168258TBJ	*TRSCM*	7300S
168263VHY	*TRSCM*	**473235**
168265TB	*TRSCM*	**473235**!
1682683TL	*TRSCM*	**474265**
1682713SL	*TRSCM*	**450765**!
16834G	*P-C*	TCS45472
168354	*HYST*	476098N=
16841	*C-R*	**474265**
16842	*C-R*	**474265**!
16842	*C-R*	**474265***
16847	*C-R*	**450765**!
16848	*C-R*	**450765**!
16848	*SIDEW*	204013
1684LPD	*JN-MN*	**416107**!
1684LPD	*JN-MN*	455073
1684OS	*JN-MN*	**416107**!
1684OS	*JN-MN*	455073
16853	*C-R*	**450765**!*
16854	*C-R*	**450765**!*
16855W	*DIA*	**416271**!
168572	*JEFF*	**473236**!
168574	*JEFF*	**412943**
168575	*JEFF*	**415449**!
16862	*TRMBL*	733067
168629	*WAUKE*	J1109
168630	*WAUKE*	**473204**=
16865	*C-R*	**473235**!
16865LDS	*JN-MN*	**417600**
16866	*C-R*	**473236**!
16866	*EATON*	**415995**!
16867	*C-R*	**473236**!
16868	*C-R*	**473236**!
168705	*US-EL*	**455121**
16871	*C-R*	**473234**
168720	*WAUKE*	472857H*=
16874G	*P-C*	TCS45472
1688203C1	*IH*	370001A
16884	*DANMA*	204002
16884G	*P-C*	TCS45472
16889	*C-R*	2012V
16892	*C-R*	334111
16893	*C-R*	2012V*
16893	*C-R*	710264
16894	*C-R*	710291
16895	*C-R*	43X57X8
16897	*C-R*	320583
16897	*C-R*	43X60X8!
16898	*C-R*	224320*
16899	*C-R*	**473236**!
16899F	*DIA*	456618
16900	*C-R*	**473236**!
1690006	*CHALL*	355732
1690006AM	*CHALL*	355732
1690007	*CHALL*	**415082**
1690016	*CHALL*	**415995**!
1690016AM	*CHALL*	**415995**!
1690016BM	*CHALL*	**415995**!
1690021	*CHALL*	**472394**
1690021AM	*CHALL*	**472394**
1690073	*CHALL*	**473232**
1690074AM	*CHALL*	**455005**
1690096	*CHALL*	**471341**!
1690096CM	*CHALL*	**471341**!
1690099	*CHALL*	417513
16901	*C-R*	3622
1690114	*CHALL*	**473231**!
1690114AM	*CHALL*	**473231**!
1690143	*CHALL*	**473229**
1690143AM	*CHALL*	**473229**
1690145	*CHALL*	**471341**!
1690172AM	*CHALL*	**415027**
1690172AM	*CHALL*	**415027**!
1690190AM	*CHALL*	**415027**

! Industrial Size/Type * Minor Width Difference $ F-M Number Is Part Of A Kit

= The U.S. customer service number is 877-4-TIMKEN. The Canadian customer service numbers are 800-565-4927 (English) and 800-565-0438 (French-Canadian).

Mfr. No.	Name	Zero Duplication or Recommended Industrial
1690190BM	*CHALL*	**415027**
16902	*C-R*	3622
16902	*CHAMP*	9674
1690204	*CHALL*	350909
1690204	*CHALL*	**471224**!
1690204AM	*CHALL*	350909
1690204AM	*CHALL*	**471224**!
1690205	*CHALL*	**417350**!
1690205AM	*CHALL*	**417350**!
1690213AM	*CHALL*	**416339**
1690213AM	*CHALL*	455031!
1690214AM	*CHALL*	**473010**
1690215	*CHALL*	**417487**
1690222AM	*CHALL*	**410308**!
1690223	*CHALL*	355737=
1690224	*CHALL*	**472409**!
169022AM	*CHALL*	**410308**!
1690293AM	*CHALL*	40169S
16903	*C-R*	**473236**!
1690305AP	*CHALL*	**472492**!
1690465	*CHALL*	**471341**!
1690467	*CHALL*	200122
1690467AP	*CHALL*	200122
1690468AP	*CHALL*	**412040**
1690492	*CHALL*	**327303**!
1690492AM	*CHALL*	**327303**!
1690493	*CHALL*	345035
16905	*C-R*	43X69X8
1690531AM	*CHALL*	**416154**!
1690534AM	*CHALL*	**473215**!
1690569	*CHALL*	**415995**!
1690598AM	*CHALL*	**416154**!
1690659AM	*CHALL*	370020A
1690701AM	*CHALL*	370006A
1690752AM	*CHALL*	**473227**!
169084	*ALLCH*	450104
1691141C2	*IH*	**415088**
1691143C1	*IH*	710008
1691144C2	*IH*	4624V
1691145C2	*IH*	**415995**
169114C1	*IH*	710006
16912	*C-R*	**470606**!
16912M1	*C-R*	**470606**!
16914	*C-R*	43X73X8
16914G	*P-C*	TCS45472
16915	*C-R*	**474260**
16916	*C-R*	470328
16916	*C-R*	**481213**!
16916M1	*C-R*	470328
16916M1	*C-R*	**481213**!
16917	*C-R*	710142
16918	*C-R*	**474278**!
16918M1	*C-R*	**474278**!
16918T5	*C-R*	**474278**!
1691RC	*SUL*	**417546**!
169237	*AU-WS*	410059
169237	*AU-WS*	**470380**!
169237	*B-L-H*	410059
169237	*B-L-H*	**470380**!
16924	*C-R*	710159
169240R1	*NAVST*	411
169256R1	*SELAS*	2146
16926LPD	*JN-MN*	115X140X12
1692G	*OSHKO*	**471785**!
16930	*C-R*	50419
169328	*IH*	JV1166
169328C1	*IH*	JV1166
169329C91	*CASE*	200851
169329C91	*IH*	200851
16933LUP	*JN-MN*	**415449**!
169437	*ALLCH*	**471795**
16945	*C-R*	**473235**
16947A	*C-R*	**470898**
16960	*C-R*	**470596***
169634	*US-EL*	**412943**
16976	*EATON*	**473462**
16976	*FULLE*	**473462**
16977	*EATON*	**410737**!
16978	*EATON*	J1111
16979	*EATON*	J1106
16981	*C-R*	**473446***
16982	*C-R*	**473446***
169847	*JEFF*	**471538**!
16984LUP	*JN-MN*	**473459**
16986LDS	*JN-MN*	**417606**
169948C91	*IH*	**472636**!
16998	*C-R*	**473446***
16999	*C-R*	**473446***
169FF18	*C-R*	**474278**!
169HA15-L	*C-R*	**474260**
169HA18	*C-R*	**474278**!
169HA18	*C-R*	6859S
169HMS18	*C-R*	**474278**!
169HMS18	*C-R*	6859S
169W11	*C-R*	**470606**!
169W12	*C-R*	**470606**!
16A3116	*MTR-C*	**473454**
16A3373	*FED*	**471231**!
16A3810	*FED*	**450593**!
16A7342	*FED*	470059
16A7342	*FED*	**470380**!
16A7415	*FED*	**471141**!
16A7628	*FED*	**471554**!
16A7639	*FED*	**473215**!
16B7400	*FED*	**473462**
16D19	*FMC*	416556!
16D19	*FMC*	**472157**
16D20	*FMC*	**471192**
16M943	*UNIVE*	**450593**!
16T12	*ATHEY*	**412119**!
16X22X4SC	*TRSCM*	16X22X4
16X22X4TC	*TRSCM*	16X22X4
16X24X5AN(35)	*ISP*	16X24X5
16X24X6SC	*TRSCM*	16X24X6
16X24X6TC	*TRSCM*	16X24X6
16X24X7	*FORSH*	16X24X7
16X24X7	*SIMRT*	16X24X7
16X24X7SC	*TRSCM*	16X24X7
16X24X7TC	*TRSCM*	16X24X7
16X26X7SC	*TRSCM*	16X26X7
16X26X7TC	*TRSCM*	16X26X7
16X28X7SC	*TRSCM*	16X28X7
16X28X7TC	*TRSCM*	16X28X7
16X30X7SC	*TRSCM*	16X30X7
16X30X7TC	*TRSCM*	16X30X7
16X32X7	*SIMRT*	16X32X7
16X32X7SC	*TRSCM*	16X32X7
16X32X7TC	*TRSCM*	16X32X7
16X35X7SC	*TRSCM*	16X35X7
16X35X7TC	*TRSCM*	16X35X7
16X38X7SC	*TRSCM*	16X38X7
16X38X7TC	*TRSCM*	16X38X7
16X40X7SC	*TRSCM*	16X40X7
16X40X7TC	*TRSCM*	16X40X7
170000	*SPG*	712107
17002	*DGASK*	5092
17004	*SPICE*	40566S
170041	*SPICE*	40566S
170046	*JEFF*	**415138**!
17006	*DGASK*	5132
17007	*C-R*	**471981**
1700742	*AVANT*	5778
17008	*DGASK*	5068
1700846	*AVANT*	**473228**
1700847	*AVANT*	9912
17009	*C-R*	470086
1700923	*FMC*	240470
1701+2701	*STEM*	386025A
1701+2701	*STEM*	**416158**
170117	*JEFF*	**415937**!
170122	*JEFF*	**471766**!
170123	*JEFF*	**471689**!
170129	*ALLCH*	450269
17013	*DGASK*	5591
17014	*DGASK*	228020
17015	*DGASK*	713750
17015	*DGASK*	BS15868
17016	*DGASK*	3698
17018	*DGASK*	5092
17018	*SPICE*	**471413**
170180	*JEFF*	**417316**!
170182	*JEFF*	**471567**!
17019	*SPICE*	**473444**
1702	*C-R*	HU036A
1702+2702	*STEM*	370001A
1702+320-2702	*STEM*	370001A
1702+320-2702	*STEM*	380001A
17020LDS	*JN-MN*	**415219**
17021	*DGASK*	5112
17021	*DGASK*	5112S
170223PTBP	*TRSCM*	2955
1702251	*WHITE*	**470625**!
1702340	*WHITE*	415983N!
1702530	*WHITE*	**415995**!
1702740	*OSHKO*	**415023**
1703	*C-R*	HU149A
1703+2703	*STEM*	370003A
1703+320-2703	*STEM*	370003A
1703+320-2703	*STEM*	380003A
17030	*DGASK*	5111
17030	*DGASK*	5111S
1703035	*HEIL*	**415449**!
170304A	*SELAS*	710067
1703125	*HEIL*	**415449**!
17032	*DGASK*	5414
1703213	*HEIL*	**470954**
1703292	*HEIL*	**470954**
17033	*DICO*	**472193**!
170330	*JEFF*	**471271**!
1703339	*WHITE*	**417171**!
170337	*ALLCH*	**481163**!
17034	*C-R*	470086*
17034	*DGASK*	5117
1703454	*WHITE*	**473179**
17035	*C-R*	470086
17035	*DGASK*	5127
17037	*C-R*	710105
17038	*C-R*	**470687***
1704	*C-R*	HU149A
1704+2704	*STEM*	370036A
1704+2704	*STEM*	370349A
1704+2704	*STEM*	380036A
17040	*C-R*	450533*
17040	*DGASK*	**473573**
17041	*C-R*	450533
17041	*DGASK*	710056
17042	*DGASK*	5116
17043	*DGASK*	5118
17046	*DGASK*	228005
17048	*DGASK*	3772
1704OS	*JN-MN*	**327303**!
1705	*C-R*	HU058A
1705+2705	*STEM*	370065A
1705+2705	*STEM*	380065A
1705+2718	*STEM*	**415058**
1705+327-2718	*STEM*	**415058**
17050	*C-R*	450533*
17050	*DGASK*	5108
17051	*DGASK*	5072
17053	*C-R*	3747
17053	*DGASK*	5337
17053D	*IH*	**471570**!
17054	*DGASK*	3909
17054	*DGASK*	BS40380
17054	*DGASK*	BS40620
17054LUP	*JN-MN*	**450307**
1705540	*WHITE*	**473464**!
1705540	*WHITE*	**473464**
1705548	*WHITE*	**416271**!
170560	*US-EL*	**473237**!
1705821	*HEIL*	240119
17059	*DGASK*	5419
17059	*DGASK*	BS5048
1706	*CHEL*	**470530**!
1706+2706	*STEM*	**416892**
1706+2710	*STEM*	370131A
1706+320-2706	*STEM*	**416892**
1706013	*HEIL*	**471554**!
1706014	*HEIL*	**473426**
17062	*NPG*	224850
17062LUP	*JN-MN*	**417597**
17064	*DGASK*	5390
17068	*DGASK*	5390
1706933	*HEIL*	**473228**
1707+2707	*STEM*	370023A
1707+320-2707	*STEM*	370023A
1707+320-2707	*STEM*	380023A
170703	*ALLCH*	240319
17076	*DGASK*	**473573**
1708	*C-R*	HU065A
1708+2708	*STEM*	370124A
17080	*DGASK*	716102
1708443	*WHITE*	**412119**!
1708548	*WHITE*	**470530**!
1709	*C-R*	HU003A
1709	*NATL*	2064
1709+2709	*STEM*	370037A
1709+2709	*STEM*	370338A
17090	*C-R*	9911S
170910	*ALLCH*	**471689**!
17095	*C-R*	1198
1709814	*FMC*	**471643**!
170X200X15SC	*TRSCM*	170X200X15
170X200X15TC	*TRSCM*	170X200X15
170X210X15SC	*TRSCM*	170X210X15
170X210X15TC	*TRSCM*	170X210X15
1710+2710	*STEM*	370131A
17100	*C-R*	710067
1710450	*WHITE*	6603*=
17106	*C-R*	2955
17107	*C-R*	2955
17107	*CATER*	**471689**!
17107	*TMTR*	**471689**!
171075R91	*IH*	**471271**!
171076R91	*IH*	**471272**!
1711	*C-R*	HU024A
1711+2711	*STEM*	370048A
1711+320-2711	*STEM*	370048A
1711+320-2711	*STEM*	380048A
17110	*C-R*	8121S
1711035	*WOOL*	**417349**
17112	*MICH*	**471530**
17112	*UNIVE*	**471530**
17113	*C-R*	710193
17113LUP	*JN-MN*	**472636**!
17115	*C-R*	6840S
17119	*C-R*	**471744**!
1712+2711	*STEM*	370021A

! Industrial Size/Type * Minor Width Difference

= The U.S. customer service number is 877-4-TIMKEN. The Canadian customer service numbers are 800-565-4927 (English) and 800-565-0438 (French-Canadian).

Mfr. No.	Name	Zero Duplication or Recommended Industrial
1712+320-2712	*STEM*	370021A
1712+3712	*STEM*	370021A
17122	*C-R*	224660
1712271	*CHRYS*	**470354**
17123	*C-R*	50327
17124	*C-R*	50327
171255TB	*TRSCM*	473336
171255VB	*TRSCM*	442251
1713	*C-R*	HU044A
1713+2713	*STEM*	370019A
17130	*C-R*	44X58X8
17134M	*DIA*	**415449**!
17135	*C-R*	**450068**
17136	*C-R*	**450068**
17137	*CHRYS*	**415449**
17137	*NPG*	**415449**
17139	*C-R*	224461
17139	*C-R*	44X60X10!
17139	*C-R*	44X60X7*
17140	*C-R*	50075=
17141	*C-R*	50075=
17142	*C-R*	224460
17144	*C-R*	442251
17145	*C-R*	5836
17146	*C-R*	442251
17147	*C-R*	224462
17148	*C-R*	224460
17148	*C-R*	224461
17149	*C-R*	224462
17149	*C-R*	44X62X8!
1715	*C-R*	HU028A
17150	*C-R*	50191
17151	*C-R*	50191
1715482	*WHITE*	6644
17155	*DICO*	**412920**!
1715514	*WHITE*	**412027**
1715672	*WHITE*	**473203**
17158M	*DIA*	**472636**!
17159	*C-R*	**470334**!
17159	*C-R*	50289
1715N2	*WHITE*	**471270**!
1716	*ALOY*	3214
17160	*C-R*	224465
17160	*C-R*	44X65X10!
171609	*EL-MO*	**415379**!
171609	*EL-MO*	**415379**
171609	*JEFF*	**415379**
171609	*JEFF*	**415379**!
1716100	*WHITE*	5401
1716130	*WHITE*	**416130**!
17162	*C-R*	50081
171628	*HEIL*	**476838**!
17163	*C-R*	50081
17164	*C-R*	50081
17165	*C-R*	350609
17166	*C-R*	350609
17167D	*IH*	**471255**!
17168	*C-R*	224465
17168	*C-R*	44X65X10!
171683	*JEFF*	**471649**!
171690	*ALLCH*	40360S!
17170	*C-R*	6098=
17170	*DGASK*	3698
17170	*DGASK*	BS40110
171700	*ALLCH*	45013S
17174	*C-R*	6101
17174	*DGASK*	227235
17175	*DGASK*	5390
17176	*DGASK*	5419
17177	*DGASK*	**415379**!
17178	*DGASK*	5065
17178LDS	*JN-MN*	**472409**!
17179	*C-R*	44X70X8
17179	*DGASK*	228010
17179	*DGASK*	BS40252
1717N2	*WHITE*	**417538**
17180	*DGASK*	4307V!
17181	*DGASK*	4307V!
17183	*DGASK*	5591
17184	*C-R*	224470
17184	*C-R*	44X72X10!
17185	*DGASK*	3772
17186	*C-R*	224470
17186	*C-R*	44X72X10!
17186	*DGASK*	710060
17187	*C-R*	8705S*
17187	*DGASK*	**473573**
17188	*C-R*	8705S
17188	*DGASK*	39608
17189	*C-R*	8705S
1718N2	*WHITE*	**415449**!
1719	*ALLCH*	**471192**
1719	*TRAC*	**471192**
17190	*C-R*	8460N
17191	*C-R*	710115
17191	*DGASK*	228008
17191	*DGASK*	BS40535
1719115	*WHITE*	**450400**
1719137	*WHITE*	6597S
17192	*DGASK*	228480
17193	*C-R*	710208
17193	*DGASK*	4307V!
17194	*C-R*	710283
17194	*DGASK*	4307V!
17195	*C-R*	8705S
17195	*DGASK*	4359V
17196	*DGASK*	710075
17196	*DGASK*	BS40396
17197	*DGASK*	226820
17198	*DGASK*	228700
17199	*DGASK*	3698
17199LDS	*JN-MN*	**415379**!
17199LDS	*JN-MN*	**415379**
17200	*DGASK*	5591
17201	*DGASK*	227410
17201	*DGASK*	BS40381
17202	*DGASK*	228009
17204	*DGASK*	BS40268
17205	*DGASK*	710060
17206	*DGASK*	227020
17207	*DGASK*	228250
17208	*DGASK*	229005
17209	*DGASK*	228009
17209	*DGASK*	BS27493
1721	*ALOY*	4148
1721+2721	*STEM*	370132A
17210	*ALLCH*	204002
17210	*DGASK*	228410
17211	*DGASK*	228010
17213	*DGASK*	228009
1721396	*WHITE*	45653S
17215	*DGASK*	228410
17216	*DGASK*	3772
17217	*DGASK*	3772
17218	*DGASK*	1021V
17218	*DGASK*	BS40265
17219	*DGASK*	1019
17219	*DGASK*	BS40387
17220	*DGASK*	227045
17221	*DGASK*	716102
172210	*JEFF*	**417205**!
17221VB	*TRSCM*	340400
17222	*DGASK*	227550
17222A	*MASSE*	**473245**!
17223	*DGASK*	228009
1722380	*WHITE*	**415449**!
17224	*DGASK*	227045
17225	*DGASK*	228010
1722546	*WHITE*	**471224**!
17226	*DGASK*	231004
17226	*DGASK*	BS16192-1
1722607	*WHITE*	**471466**!
1722652	*WHITE*	**413246**
17227	*DGASK*	228010
17227	*EATON*	**411394**=
17228	*DGASK*	228008
17228	*DGASK*	BS40583
17228LUP	*JN-MN*	**455134**!
17229	*DGASK*	227040
17229	*DGASK*	BS25035
17229	*EATON*	J1112
1723	*C-R*	HU066A
17230	*C-R*	**450400***
17230	*DGASK*	716102
17231	*C-R*	**450400***
17231	*DGASK*	227530
17232	*DGASK*	228010
17233	*DGASK*	228010
17234	*C-R*	**450400*=**
17234SB	*TRSCM*	482126
17234SP	*TRSCM*	**473237**
17235	*C-R*	**450400***
17235	*DGASK*	226480
17236	*DGASK*	710258
172361	*CLIMX*	240733
17236LUP	*JN-MN*	223014
172373TB	*TRSCM*	**473237**!
1723758	*FMC*	**470390**
17238	*DGASK*	229005
17239	*DGASK*	2377
17239	*DGASK*	BS40509
1723903	*WHITE*	**473473**
1724	*C-R*	HU070A
1724+2724	*STEM*	**417506**
17240	*C-R*	42352S*
17240	*DGASK*	3893V
17241	*DGASK*	710060
17241	*DGASK*	BS40449-1
17242	*DGASK*	716445
17242	*DGASK*	BS40578
17242VHY	*TRSCM*	43071S
17243TB	*TRSCM*	**471504**!
17244	*C-R*	**450400**
172443TB	*TRSCM*	**471831**!
172463	*JEFF*	**470712**!
17248	*C-R*	42352S
17248	*DGASK*	BS40592
1724D	*GOODM*	**472015**!
17250	*DGASK*	231004
17250	*DGASK*	BS16192-1
17251	*DGASK*	BS40592
17252	*C-R*	**473237**!
17252VH	*TRSCM*	40494S
17253	*DGASK*	BS40598
17253SSB	*TRSCM*	**472164**
17253TB	*TRSCM*	**472164**!
17253VTB	*TRSCM*	**472164**!
17255	*DGASK*	228009
17256	*C-R*	6840S
17256	*DGASK*	226820
172563VHY	*TRSCM*	203015
172563VHY	*TRSCM*	205015!
17257	*C-R*	482126
17257	*DGASK*	229210
1725831	*WHITE*	**471795**
17259A	*MASSE*	**472144**!
1726+2727	*STEM*	370150A
17260A	*MASSE*	**417316**!
17261	*C-R*	**473237**
17262	*C-R*	**473237**!*
17263	*C-R*	**473237**!
17263	*DGASK*	BS40638
17263TB	*TRSCM*	**472185**!
17265	*C-R*	**473237**
17265	*DGASK*	BS40617
17267	*C-R*	**473237**!
17268	*C-R*	**473237**!
172683SB	*TRSCM*	50289
1726DA	*MASSE*	**417316**!
1727	*C-R*	HU019A
17270	*C-R*	**473237**!
17271	*C-R*	**473237**!
172714TC	*TRSCM*	323119
17272	*C-R*	**473237**!
172737	*ALLCH*	**417555**!
17273TB	*TRSCM*	**472179**
17273UA	*TRSCM*	200854
17273VHY	*TRSCM*	204002
17274	*C-R*	**473237**!
17275	*DGASK*	BS40626
1727592	*FMC*	**472324**!
1727593	*FMC*	**473214**!
17276	*SPICE*	40769S
1727607	*WHITE*	**471538**!
17277	*C-R*	204503
17277	*C-R*	41206S=
17278LUP	*JN-MN*	223275
17278LUP	*JN-MN*	32X56X10!
1728+2728	*STEM*	370047A
17280	*C-R*	9845
17280A	*C-R*	**472636**!
17281	*C-R*	**471504**
1728192	*WHITE*	5778
17283	*C-R*	**471504**
17284	*C-R*	**471504**
17285	*C-R*	**471504**
17285	*SIDEW*	**470625**!
17286	*C-R*	6936S
17286	*C-R*	9845
17286	*DGASK*	BS40625
17287	*C-R*	**471504**
17287	*DGASK*	BS40619
17287	*SIDEW*	**472299**
172875SA	*TRSCM*	**471141**
172875TA	*TRSCM*	**471141**!
17288	*DGASK*	BS40182
17289	*C-R*	**471504**
1728M5	*WHITE*	**471689**!
1729	*C-R*	HU014A
17290	*C-R*	**471504**
17293	*C-R*	**471504**=
17294	*C-R*	**471504**!
172940	*CLIMX*	415104N=
172942	*CLIMX*	**417487**
172942	*CLIMX*	**417487**!
1730	*C-R*	HU014A
17302	*C-R*	**471504**!
17303	*C-R*	**471504**
173037TB	*TRSCM*	**471984**
173063TB	*TRSCM*	**473313**!
173063TB	*TRSCM*	710005
17308A	*MASSE*	**470530**!
1730985	*CHRYS*	**474278**!
1730985	*CHRYS*	6859S
1731	*C-R*	**471689**
17310	*C-R*	43071S
17312	*C-R*	**471705**!*
17314	*C-R*	**471692**!

! Industrial Size/Type * Minor Width Difference

= The U.S. customer service number is 877-4-TIMKEN. The Canadian customer service numbers are 800-565-4927 (English) and 800-565-0438 (French-Canadian).

Mfr. No.	Name	Zero Duplication or Recommended Industrial
17314M1	C-R	**471692**!
17315	C-R	**471831**!*
173153SM	TRSCM	482267
17316A	MASSE	**417344**!
17317	C-R	**471831**!
17318	C-R	**471831**!
173193	ALLCH	**412473**!
173194	ALLCH	**55301S**
173197	ALLCH	**471887**
1731M1	C-R	**471689**!
1732	C-R	HU007A
17320	C-R	**471831**=
173232KM	TRSCM	6840S
173234KBY	TRSCM	8121S
17324	C-R	**471684**!
173242VB	TRSCM	8705S
17324A	MASSE	**470409**!
17324A	MASSE	50409
17324M1	C-R	**471684**!
17326	C-R	471686*
173275VHY	TRSCM	5836
17328	C-R	**470590***
173285PTBJ	TRSCM	8460N
1733	C-R	HU009A
17330	C-R	472951
17330	C-R	**474252**
173305PTBP	TRSCM	6818
17330M1	C-R	472951
17330M1	C-R	**474252**
17331	C-R	**471688**
17332	C-R	6489*
1733603	CHRYS	7188S
1734	C-R	HU008A
17340	C-R	494122
17340	C-R	6489*
17341	C-R	6489
1734152	BENDI	**417343**!
173422SP	TRSCM	7607
17344	C-R	6489*
173463	JEFF	**470712**!
17348	C-R	203007=
1734913	CHRYS	**471538**
1734RC	SUL	**471648**
17353	C-R	710389
17354	C-R	204007=
17357	C-R	6489
17358	C-R	**473157**
17359	C-R	6489
1736	C-R	HU012A
17360	C-R	**472164**!
17362	C-R	**472164**!
17363	C-R	**472164**!
17364	C-R	**472164**!
17365	C-R	**472164**!*
17365A	C-R	**472924**!
17366	C-R	**472164**!
1737	C-R	50631
17371	C-R	**472164**!*
173713	AU-LI	**471765**!
17372	C-R	**472164**!
173735	ALLCH	**415991**
173735	ALLCH	**415991**!
17375	C-R	**472164**!
17376	C-R	**472164**!
1737771	CHRYS	3103!
17379	C-R	**472164**!
1738	C-R	HU011A
17381	C-R	**472164**!
1738263	CHRYS	**470898**!
17382A	MASSE	**473010**
17383A	MASSE	**473214**
17384	C-R	**472164**!
173849	JEFF	**472636**!
173857	ALLCH	**471984**
17386	C-R	**472164***
17386	C-R	**472164**!
17387	C-R	**472164**!
17388	C-R	40494S
173883	JEFF	**472164**!
1738831	CHRYS	5126
17389	C-R	**472164**!
17390	C-R	**472164**
17391	C-R	**472164**!
17392	C-R	**472164**
17392LUP	JN-MN	1012*
17392LUP	JN-MN	1012N*
17392LUP	JN-MN	45X62X8!*
17393	C-R	7300S
17393TB	TRSCM	476820
17395	C-R	**472164**!
17395601	JOHND	416327
17396	C-R	**472164**!*
173968	JEFF	**450400**
173970	JEFF	**472179**
17399	C-R	**472164***
1740	C-R	**417604**
17400	C-R	**472164**!
17401	C-R	**472164***
17402	C-R	**472164**!
1740270	WHITE	HU110A
1740273	WHITE	370007A
1740274	WHITE	HU036A
174029	CLIMX	**417487**
17403	C-R	**472193**!
17403	C-R	**473234**
17403	NEWPR	4813V
17404	C-R	**472193***
17404	C-R	**472193**!
17405	C-R	**472164**!
17405LUP	JN-MN	224025
17406	C-R	203015
174069H1	HOUGH	**472018**
174069H1	IH	**472018**
17409	C-R	**472193**!
174099H1	HOUGH	**416229**
174099H1	IH	**416229**
174099H2	IH	**416229**
17410	C-R	**472193**!
17410D	IH	**417247**!
17412	C-R	**471705**!*
17413	C-R	**473796**
174136	CLIMX	**415937**!
174137	CLIMX	**416865**!
17414	C-R	**471692**!
17414M1	C-R	**471692**!
17415	C-R	204502
17416	C-R	**473203**
17418	C-R	**471413**
17418M1	FREIG	**471413**!
1741M1	C-R	**471689**
1742	C-R	HU013A
17420	C-R	**472185**!
17420SS	JN-MN	22X32X7
1742252	WHITE	**413469**!
174227JX	MICH	200600
17423	C-R	**472185**!
17424	C-R	**471684**!
17424M1	C-R	**471684**!
17425	EATON	**415027**
17426	C-R	471686*
174277	HYST	**412473**!
17428	C-R	**470590***
1743	C-R	HU009A
1743	C-R	HU159A
1743	C-R	HW009A
17430	C-R	472951
17430	C-R	**474252**
17430M1	C-R	472951
17430M1	C-R	**474252**
17431	C-R	**471688***
17431	CASE	**472015**=
17431	WHITE	**415001**!
17432	C-R	**472185**!
17433	C-R	**472185**!
17436	SCHWI	**473225**!
17441	C-R	**472185**!*
17442	C-R	**472185**!
17443	C-R	**472185**!
17444	C-R	3227
17446	C-R	**472185**!
17447	C-R	**472185**!
17450	C-R	**472185**!
17451	C-R	**472185**!
17455557	AUTSP	**472826**!
17456	C-R	**472185**!
17456	C-R	**472185***
17457	C-R	**472185**!
174573	ALLCH	**472029**
174574	ALLCH	**415995**!
17458	C-R	3227
17459	C-R	3227
17459	MALL	**471571**
17460	C-R	**472185**!
17460	SPICE	**472354**!
1746312	SPICE	**415027**
17465	C-R	**472185**!
17466	C-R	**472185**!
17468	BU-SP	**415072**
17468	C-R	1177
17472	C-R	**470334**!
17472X	MASSE	**472439**
17473	C-R	**470334**!*
17474	C-R	**470334**!
17475	C-R	**470334**!
17475LDS	JN-MN	**415027**
17476LDS	JN-MN	**415227**!
17478	SPICE	40769S
174783	SPICE	40769S
174826	JEFF	**470625**!
17483	C-R	**470334**!
17484	C-R	**470334**!*
17485	C-R	200854
174854	ALLCH	**415027**!
174854	ALLCH	**415027**
17486LUP	JN-MN	**472299**
17488	C-R	204038
174938	JEFF	320457
17494	C-R	**472179**
17497	SPICE	**471689**!
17497	VIC	**471689**!
1749OS	JN-MN	**472397**!
174Z1	C-R	**471689**
174ZM1	C-R	**471689**
17502	C-R	**473237**
175038	FORD	**472185**!
17508	C-R	**472179**
175088	ALLCH	**415138**!
17509	C-R	**472179**
1751	C-R	**471689**
1751	CABOT	**471689**!
17511	C-R	**471705**!
17512	C-R	**471705**!
17514	C-R	**471692**!
17514M1	C-R	**471692**!
17515	C-R	**472179**
175155	JEFF	**415483**!
17516	C-R	**472179**
1751702M1	MASSE	**471267**!
1751M1	C-R	**471689**
17520	C-R	710248
17520015A	HARWA	175X200X15
17521	TRMBL	370023A
17521	WHITE	370023A
17522	C-R	**472179**
17522	C-R	**472179**=
17522	TRMBL	370007A
175223SA	TRSCM	**450400**
17523	C-R	**472179**
17524	C-R	**471684**!
17524M1	C-R	**471684**!
17525	C-R	471337
17526	C-R	471686
17528	C-R	**470590**
1752N2	WHITE	**417538**
17530	C-R	472951
17530	C-R	**474252**
17530M1	C-R	472951
17530M1	C-R	**474252**
17531	C-R	**471688**
17533	C-R	**472179**
17535	C-R	**472179**
1753532M1	MASSE	**471554**!
17537	C-R	**472179**
17538	C-R	**472179**
1754	C-R	HU057A
17542	SPICE	40286
1754299M1	MASSE	421
17544	C-R	40183S
17544	C-R	**472179**
1754411M1	MASSE	414
1754835M1	MASSE	340724!
17552	C-R	**472179**
175559	JEFF	**417511**
17556	C-R	**472179**
17557	C-R	**472179**
17558	C-R	**472179**
1756904	ROCKW	**415991**
1756904	ROCKW	455146!
1756OS	JN-MN	**416339**
1756OS	JN-MN	455031!
175732H1	HOUGH	**471424**!
175732H1	IH	**471424**!
17581	C-R	**473447**
17582	C-R	**473447**
17583	CASE	40067S=
175938	JEFF	**416888**!
17593LDS	JN-MN	**415027**
17599	C-R	**472179**
175991	JEFF	**473405**
175A4	WHITE	**472636**!
175F-1	KEN	**471689**!
175G	OSHKO	**417344**
175K1	WHITE	240151
175ML1M1	C-R	**471689**
175W1	C-R	**471689**
175W1M1	C-R	**471689**
175W30	C-R	472951
175W30	C-R	**474252**
175X200X15	SIMRT	175X200X15
175X200X15SC	TRSCM	175X200X15
175X200X15TC	TRSCM	175X200X15
17600	CASE	**472924**!
17605	C-R	**473447***
17607	C-R	323119
17608	C-R	200354*
17609	C-R	204002*
17611	C-R	204002*
17614	C-R	203002

! Industrial Size/Type * Minor Width Difference

= The U.S. customer service number is 877-4-TIMKEN. The Canadian customer service numbers are 800-565-4927 (English) and 800-565-0438 (French-Canadian).

Mfr. No.	Name	Zero Duplication or Recommended Industrial
17617	C-R	204038
17618	C-R	200354
176199R91	IH	**471413**
17620	C-R	200600
17623	C-R	**470334**!
17623	C-R	50289
176234	US-EL	**473239**!
17624	C-R	712260
176256	US-EL	**455480**!
17627A	MASSE	**412119**!
176364	HYST	**471138**!
17638	C-R	**471141**!
17639	C-R	**471141**!
1764	C-R	HU037A
1764292	GMC	**473471**
17643A	C-R	**415449**!
17644	C-R	**471141**!*
17645	C-R	**471141**!*
1765	C-R	HU042A
17650	C-R	**471141**!
17651	C-R	**471141**!
17653	C-R	**471141**!*
17655	C-R	**471141**!
17656	C-R	**471141**!
17657	C-R	**471141**
1765RC	SUL	**412119**!
176681R91	IH	**450593**!
17670LDS	JN-MN	**473238**!
17671	C-R	**471141**!*
17674	C-R	**471141**
17675	C-R	5711
17678	C-R	**473448**
1768	C-R	HU031A
17680	C-R	5711
17681	C-R	**473448**
17682	C-R	5711*
17684	C-R	**473448**
17685	C-R	**473448**
17685	SIDEW	**471192**
17686	C-R	1979
17687LDS	JN-MN	**473231**!
17688LDS	JN-MN	**471424**!
17689	C-R	**473448***
1769	C-R	HU036A
17691	C-R	710126
17691LDS	JN-MN	**471692**!
176927	CUMMI	**417621**
17693	C-R	**473448***
17694LDS	JN-MN	**471224**!
17695	C-R	**473448***
17697	C-R	**471984**
17699	C-R	**471984***
176G	OSHKO	**473464**!
176G	OSHKO	**473464**
1770	C-R	HU034A
17700	C-R	**471984***
177000	JEFF	**412871**!
17701LUP	JN-MN	**471785**!
17702	C-R	204501!
17702	C-R	**471984***
17703	C-R	45X72X7
17706	C-R	**471984**
17707	C-R	**471984***
177070	CLIMX	**473238**!
1771	C-R	HU042A
17710	C-R	**473313**
17710182	EL-PA	**473010**
17711	C-R	**473313**
17712	C-R	**471984**=
17714	C-R	710067
17715	C-R	**473313**
17716	C-R	**473313**!*
17717	C-R	1992*
17718	C-R	**473313**!
177190	JEFF	**416107**!
177190	JEFF	455073
177191	JEFF	**412473**!
17719A	C-R	**470530**!
17720	C-R	710005
17722	C-R	710005
177234PTBY	TRSCM	2440
17724	C-R	200303=
17724A	C-R	**473228**
17726	C-R	482267
17727	C-R	6818
17728	C-R	224510
17729	C-R	224460
1772RC	SUL	**416288**!
17730	C-R	224520
17730	C-R	45X60X8!
17731LDS	JN-MN	**415303**!
17732	C-R	224520
17732	C-R	45X60X10!
17734	C-R	1992*
17734	C-R	224550
17734	C-R	45X65X8!
17736	C-R	1012
17736	C-R	1012N
17737	SUPER	**415254**
17739	C-R	**470088***
17739	SUPER	**455019**!
17741	C-R	45X60X7
17742	C-R	1012*
17742	C-R	1012N*
177431H1	IH	**470954**!
177433	ALLCH	**415025**
17744	C-R	45X72X12
17745	C-R	**470088***
17745LUP	JN-MN	**481864**
17746	C-R	**470088***
17746LDS	JN-MN	**416239**!*
17748	C-R	3583
17749	C-R	45X62X8*
17750	C-R	224520
17750	C-R	45X60X10!
17751	C-R	210945
17752	C-R	224520
17752	C-R	45X60X8V!
17753	C-R	710078
17754	C-R	1012
17754	C-R	1012N
17754	C-R	45X62X8!
17754	C-R	494122
17754	C-R	710321*
17755	C-R	**455536***
17756	C-R	**455536***
17756LDS	JN-MN	**473226**
17757	C-R	1992
17757	C-R	45X65X8!
17757LDS	JN-MN	**472179**
17758	C-R	224560*
17758	C-R	320564*
17758	C-R	45X65X8!
17758	C-R	710345
17759	C-R	1992
17759	C-R	45X65X8!
17760LUP	JN-MN	65X85X10
17761	C-R	55687=
17762	C-R	1992
17762	C-R	45X65X8!
17762	C-R	45X65X8V!
17764	C-R	45X65X8!
17766	C-R	224560
17766	C-R	45X68X7!
17767	C-R	320564
17767	C-R	45X68X10V!
17769	C-R	45X68X7*
17770	C-R	45X70X10!
17771	C-R	476820
17773	C-R	224570
17773	C-R	45X72X8V!
17774	C-R	45X72X7*
17775	C-R	9845
17775	C-R	9845V
17776	C-R	45X72X95
17778	C-R	1943
17778	C-R	224570*
17778	C-R	45X72X7!
17779LDS	JN-MN	**415027**
17780LDS	JN-MN	**417598**
17781	C-R	2440
17782	C-R	1979*
17782	C-R	45X75X7!
17783	C-R	1979
17783	C-R	45X75X10V!
17784	C-R	224510
17784	C-R	45X58X7!
17785	C-R	45X70X10!
17785	C-R	710238
17787	C-R	714075
17788LDS	JN-MN	**417602**!
17789	C-R	1939
177896	ALLCH	340787
17790	C-R	1012
17790	C-R	1012N
17790	C-R	45X62X8!
17791	C-R	45X80X10
17792	C-R	1952
17793	C-R	45X82X8
17793LUP	JN-MN	**472439**
17794	C-R	45X80X10
177949	US-EL	**471766**!
17794LUP	JN-MN	**473204**
17795	C-R	224570
17796	C-R	45X85X10
177T5	WHITE	**415449**!
17801	C-R	1939
17802	C-R	1906*
17803	C-R	710525
17804	SUPER	**418028**
17804	SUPER	455137!
17805	C-R	321460
17806	C-R	321460*
178070	CLIMX	**473238**!
17808	C-R	710248
1781	C-R	HU028A
17810	C-R	452742
17811	C-R	452742
17811	C-R	452742V!
17815	C-R	7607
17817LUP	JN-MN	**472150**
17818	C-R	45X72X7!
1782	C-R	HU039A
17820	C-R	50266
17821	C-R	50266*
178223TB	TRSCM	321460
178253TA	TRSCM	452742
178263SB	TRSCM	50266
1782683SL	TRSCM	450269
1782A2	WHITE	**330385**!
1783	C-R	HU009A
17831	C-R	450269
17832	C-R	450269*
17833	SPICE	**473228**
17833	VIC	**473228**
1783301	SIDEW	**471504**!
17834	C-R	450269
178345	HYST	**415294**!
17836	C-R	6781
1784	C-R	HU066A
17841	C-R	450285
17842	C-R	450285
178446	HYST	**482163**!
17846	C-R	8314
17846LDS	JN-MN	**417020**
17847	C-R	450285
178481	JEFF	**471647**
17849	C-R	4072
17849	C-R	4072N
1785	C-R	HU149A
17851	C-R	480281!
178566	FUNK	**415138**!
1786	C-R	HU012A
1787	C-R	HU036A
17879	C-R	450089
178791	JOY	**417511**
1788	C-R	HU009A
1788	C-R	HU159A
17880	C-R	450089
178813	JEFF	**471649**!
17886LUP	JN-MN	**417563**
178874	WAUKE	**415984**!
1789	C-R	HU005A
1789613	CHRYS	**417134**
17897	C-R	224650
178HDR14	C-R	204020
178HDR14	C-R	204505!
1790	C-R	HU110A
1790	C-R	HU159A
179030	CHRYS	5526
17905	C-R	710126
17909	C-R	444116
17909	C-R	46X59X8!
1791	C-R	HU009A
1791	C-R	HU159A
17910	C-R	46X60X8
17914	US-EL	**472185**!
179147	ALLCH	**416865**!
17915	C-R	710128
1791590	CHRYS	5778
179164H1	IH	**417357**
1791687	CHRYS	**410308**!
1791688	CHRYS	**470898**
1791717	CHRYS	40316S
179177	ALLCH	**455655**!
17919	C-R	710260
1791963	CHRYS	40769S
17920	C-R	1012N
17920	C-R	224662
17920	C-R	46X62X8!
1792131	CHRYS	**450639**
1792140	CHRYS	**470506**!
179275VB	TRSCM	6781
17929	BU-SP	**416271**!
17929	KOEH	**416271**!
1793	C-R	HU009A
1793	C-R	HU159A
17930	C-R	46X65X7!
17936	EATON	**415437**!
17936	EATON	**415437**
1794110	CHRYS	**473458**!
1794135	CHRYS	**471272**!
1794149	CHRYS	**470954**!
1794206	CHRYS	**415483**!
179424	ALLCH	**417433**
1794312	CHRYS	**416130**!
179447R91	IH	**416500**
17949	C-R	**472070**

! Industrial Size/Type * Minor Width Difference

= The U.S. customer service number is 877-4-TIMKEN. The Canadian customer service numbers are 800-565-4927 (English) and 800-565-0438 (French-Canadian).

Mfr. No.	Name	Zero Duplication or Recommended Industrial
17950	C-R	46X68X8
1795192	CHRYS	6808N
17952LUP	JN-MN	**415349**
1795358	CHRYS	**417485**
17953LDS	JN-MN	**472213**
17955	C-R	710161
1795508	CHRYS	6808N
17959LDS	JN-MN	**416865!**
17960	C-R	46X70X8!
17960	C-R	710238
179603	HYST	**417545**
179618	ALLCH	**415867**
179633	HYST	**415962**
179643	ALLCH	**415023**
179656	SPERY	**415035=**
17972LDS	JN-MN	**417181!**
179737	ALLCH	**352541**
17975	C-R	46X72X8
1797558	CHRYS	**415988**
17980	C-R	46X73X8
1799582	CHRYS	**411348!**
17B528	UNIVE	340724!
17DH4300	DURA	**471554!**
17DH430A	DURA	**471231!**
17DH430AAS	DURA	**473236!**
17DH430B	DURA	**471570!**
17DH430BB	DURA	**471267!**
17DH430D	DURA	**450039**
17DH430DD	DURA	**472705!**
17DH430F	DURA	**471649!**
17DH430K	DURA	**471765!**
17DH430L	DURA	**473426**
17DH430M	DURA	**471750!**
17DH430O	DURA	**471554!**
17DH430OS	DURA	**471554!**
17DH430T	DURA	**473234**
17DH430Y	DURA	**470712!**
17DH430YS	DURA	**470712!**
17DH579	DURA	**473197**
17DH663	DURA	**473231!**
17G170	OSHKO	**415023**
17G91	OSHKO	**415023**
17GX91	OSHKO	**415023**
17R528	MTR-C	340724!
17T12	ATHEY	**415988**
17T12	FRUEH	**415988**
17X27X7SC	TRSCM	17X27X7
17X27X7TC	TRSCM	17X27X7
17X28X7SC	TRSCM	17X28X7
17X28X7TC	TRSCM	17X28X7
17X30X7SC	TRSCM	17X30X7
17X30X7TC	TRSCM	17X30X7
17X32X7SC	TRSCM	17X32X7
17X32X7TC	TRSCM	17X32X7
17X35X7SC	TRSCM	17X35X7
17X35X7TC	TRSCM	17X35X7
17X37X7SC	TRSCM	17X37X7
17X37X7TC	TRSCM	17X37X7
17X38X7SC	TRSCM	17X38X7
17X38X7TC	TRSCM	17X38X7
17X40X7SC	TRSCM	17X40X7
17X40X7TC	TRSCM	17X40X7
17X47X7AN(35)	ISP	17X47X7
17X47X8SC	TRSCM	17X47X8
17X47X8TC	TRSCM	17X47X8
180	C-R	5095
18000	C-R	710397
180008M1	MASSE	6336S
1800106003	BUDD	**416158**
180029	CHRYS	5399
180030	CHRYS	5531
18009	C-R	4249
18014	C-R	224663
18020015C	HARWA	180X200X15
18021	EATON	**416500**
18022A	MASSE	**474272**
1802382	FORD	7381S
18024	C-R	4278
1803	C-R	HU149A
18030	C-R	710409
18032	BU-SP	**415991**
18036LUP	JN-MN	**471141!**
18038	BU-SP	**472636!**
18039	C-R	**451817***
1804009C91	IH	3894V
1804009C91+1806212C1	IH	5066
1804010C91	IH	3893V
1804010C91	IH	39608
18041	BU-SP	**471192**
1804414	GMC	**410987!**
18047	C-R	1992
18047	C-R	203006!*
18049	C-R	5133
18050	C-R	203006!*
18053	C-R	203006!*
18055	C-R	44053
180562	US-EL	**415984!**
18058	C-R	**472070**
180586	FMC	**471354!**
180587	FMC	**471649!**
180597	ALLCH	**415027=**
1805B-54	HU-WR	**472924!**
180612	ALLCH	**415683**
1806380C91	IH	**416404!**
18064G	P-C	TCS45472
180689	HYST	**472924!**
180689	HYST	**472924*=**
18070	C-R	**472070**
18071	C-R	**472070**
1807783C1	IH	J1127
1808	C-R	HU065A
180847C1	IH	39958
1808751C91	IH	5066
18094G	P-C	TCS45472
1809797	MCKIN	**416865!**
1809964C92	IH	5624
18099LUP	JN-MN	**417433!**
180X200X15	SIMRT	180X200X15
180X210X15SC	TRSCM	180X210X15
180X210X15TC	TRSCM	180X210X15
18100	C-R	**472070**
18100	MICH	**472705!**
18100D	IH	**470530!**
18103	C-R	**472070**
18104	C-R	**472070***
1810879	MCKIN	**472394**
1810883	MCKIN	**472016**
181103	ALLCH	**418028!**
1811035	WOOL	**415036**
18112	C-R	**471866!**
18112	MICH	**471281!**
18112	UNIVE	**471281!**
18114	C-R	**471866*=**
181153	JEFF	**411376!**
18116	C-R	**471866!**
18117	C-R	**471866=**
18121	C-R	**471866!**
1812329C92	IH	5723
181234VB	TRSCM	444116
18124	BU-SP	**417486**
18125	MICH	450536
18125	MICH	**471535!**
18125	UNIVE	**471535!**
181254VHY	TRSCM	203006!
181265TBJ	TRSCM	**472070**
18127	C-R	7186S
18128	C-R	7186S
181287C1	CASE	**473240**
181287C1	IH	**473240!**
181288C1	IH	**470565!**
18130	C-R	**473449**
181313PTB	TRSCM	7044NA
18134LDS	JN-MN	**416865!**
181361	US-EL	**416380!**
181363	US-EL	**473517!**
181364	US-EL	**415991!**
181364	US-EL	**415991**
18137	UNIVE	**471551!**
18139	C-R	**473449**
18140	C-R	**473449**
18148	EATON	**471821=**
18148D	IH	**415066**
18149	C-R	7600S
18151D	IH	**417316!**
18152F	OSHKO	**417487!**
18152F	OSHKO	**417487**
18154G	P-C	TCS45472
18158	C-R	**473449**
181580	JEFF	**473452**
18159	C-R	**473449!***
1816046C1	IH	3894V
1816558C91	IH	39608
1816559C91	IH	39608
18167	C-R	480281!
18167A	C-R	**415449!**
18168	C-R	480281!
181692	HYST	**416921!**
1817-B1	REO	370023A
18173	NEWPR	4741
181737	HYST	**471766!**
18175	FMC	204002
1817865C1	IH	917034
1817867C92	IH	917034
1818772C1	IH	**416404!**
18190	C-R	3604
181937	ALLCH	**416865!**
1819733C91	IH	39608
18198	BU-SP	7208S
181W287	CONE	5531
182	C-R	5576
182	CALI	**417223**
18201	DIVCO	**473215!**
182067	ALLCH	**472560N**
182091	HYST	**472258!**
182110	C-R	6370N
182112	C-R	**323138!**
18217	C-R	203006!
182200118	IG-RA	**415995!**
182274VHY	TRSCM	7600S
1822834C91	IH	5723
1822836C1	IH	5723
182293	JEFF	**471341!**
182294	JEFF	**417596**
18231	C-R	**473450**
18231	US-EL	**474255**
18232	C-R	**473450**
1823404C1	NAVST	600012
182387	JEFF	**471271!**
1824075	CHRYS	**472354!**
18241	C-R	**473450**
18242	C-R	**473450!***
18242D	IH	**416339**
18242D	IH	455031!
18242VB	TRSCM	7934S
182455	JEFF	**473237!**
182473TB	TRSCM	**472747**
18250	C-R	**473450!***
182502VHY	TRSCM	340823
182503SB	TRSCM	**473454**
182512	JEFF	**418029!**
182513	JEFF	**417492**
182514	JEFF	**456105**
18253SSB	TRSCM	**473454**
18253X	MASSE	**471424!**
182564PTBJ	TRSCM	2942
182564PTBJ	TRSCM	**350936!**
182566	JEFF	**415035**
182566	JEFF	**415035!**
182567	JEFF	**417357**
182567	JEFF	455192!
182568	JEFF	**470682**
182569	JEFF	**410694!**
18258	C-R	5070
182591	JEFF	**412871!**
182614	HYST	**471341!**
1826167	CHRYS	7013S
182623VB	TRSCM	6985
18263SSB	TRSCM	331227H
18263TB	TRSCM	**472439**
18264	C-R	7044NA
18265	EATON	**417181=**
18266	C-R	**450090**
18267	C-R	**450090**
1826719	CHRYS	7216
18268	C-R	481992
1826C	GOODM	**472636!**
1826D	GOODM	**472636!**
18270	C-R	**450090***
18271	C-R	**450090***
1827176C91	IH	600337
1827177C1	IH	**416404**
18272	C-R	**450090**
18273TA	TRSCM	**472572**
18273TB	TRSCM	**472572!**
18274SP	TRSCM	3604
18274SSBJ	TRSCM	**473179**
18274TA	TRSCM	**414045!**
18275TBJ	TRSCM	9449
18276	C-R	6930*
182778	HARN	**415725!**
18278	C-R	6930*
1827D	GOODM	**412920!**
18283SB	TRSCM	**473238**
18283SP	TRSCM	9912
18283TB	TRSCM	**473238!**
182843KBY	TRSCM	5699
18285SP	TRSCM	2689S
18285TBJ	TRSCM	5126
1828719	CHRYS	7216
1828OS	JN-MN	**417596**
18292VM	TRSCM	6064
182992VB	TRSCM	203034!
182992VB	TRSCM	6547
183-525-217	AUDI	223845
183-525-217	VW	223845
183-525-217A	AUDI	223845
183-525-217A	VW	223845
183003TB	TRSCM	**473239!**
18303TB	TRSCM	**473457!**
18303VSB	TRSCM	**473239**
18306A	C-R	**470530!**
1831	C-R	**450593!**
1831	CLARK	**450593!**
183105SBP	TRSCM	7216
18311	C-R	**473419**
18311M1	C-R	**473419**
18312	C-R	**473419**
18312M1	C-R	**473419**

! Industrial Size/Type * Minor Width Difference

= The U.S. customer service number is 877-4-TIMKEN. The Canadian customer service numbers are 800-565-4927 (English) and 800-565-0438 (French-Canadian).

Mfr. No.	Name	Zero Duplication or Recommended Industrial
18313	C-R	450040
18313SP	TRSCM	6808N
18314	C-R	476838!
18314	FAIRB	476838!
18314M1	C-R	476838!
18314PSP	TRSCM	9316
18319SP	TRSCM	3195
1831M1	C-R	450593!
183214	CONCA	471413!
18324	C-R	450033
18325	C-R	474273
18325	DIVCO	473462
18326	C-R	473412
18327	C-R	473415
18328	C-R	471137
18328	FAIRB	471137
18328	HUGKE	471137
18328M1	CR-CF	471137
18329	C-R	450038
18330	C-R	450039
18331	C-R	450040
18331	FAIRB	450040
18334TA	TRSCM	410524
18336	SPICE	471141!
18338115	SPICE	470625=
18342702	EL-PA	473458!
1834474C1	IH	351196V
18346312	SPICE	470625=
1834632C1	IH	600451
1834638	SPICE	417344
183507A	HARWA	18X35X7
18355	SPICE	410308!
18356392	EL-PA	471750!
18359-1	SPICE	470625=
18365	SIDEW	473446
18375LUP	JN-MN	1979
18376LUP	JN-MN	65X100X10
183837	HOUGH	415227=
183837H1	IH	415227=
183847H1	HOUGH	415021
18384D	IH	410987!
18396LUP	JN-MN	416154!
183CP1M1	C-R	450593!
183F1	C-R	450593!
183W1	C-R	450593!
183W12	C-R	473419
183W14	C-R	476838!
183W14	CR-CF	476838!
183W14-M1	C-R	476838!
183W1M1	C-R	450593!
183W28	CR-CF	471137
18402	SPICE	471787
1840201	SIDEW	471821!
184021	SPICE	471787
184023	SPICE	471787
184025	SPICE	471787
184072C91	CASE	471341
18408	C-R	291295
18408	EATON	416339=
18408	SIDEW	472397!
1840847M1	MASSE	415234!
1841007	BR-WN	471765!
18412	C-R	471841
18412LDS	JN-MN	415259!
18415	C-R	6960
18419LDS	JN-MN	471831!
1842	C-R	HU013A
184232	JEFF	415991
184232	JEFF	455146!
184242VAY	TRSCM	291295
18425	C-R	473451!
18426LUP	JN-MN	470354*
18427	C-R	40268=
1843	C-R	HU009A
1843	C-R	HU159A
18436	C-R	3606
18436A	C-R	472164!
18438	C-R	473452
18439	C-R	473452
18440LUP	JN-MN	180X210X15
18443	C-R	710501
18444	C-R	473452*
18444	C-R	714675
18446	C-R	473452
18446323	SPICE	415995!
18446326	SPICE	417181=
18447	C-R	47X60X8
18450	C-R	47X62X8!
18450	C-R	710320
18451	C-R	414045!*
184517	GOODM	415138!
18452	C-R	224820
18454	C-R	1937*
18454	C-R	710191!
18458	C-R	710191
18458	FITZ	2955
18459	FITZ	2955
18461	C-R	473453*
184631	SPICE	473016!
184636	SPICE	470682
184638	SPICE	471466!
184639	SPICE	472635
18463LUP	JN-MN	473205!
18465	C-R	710215
18467	C-R	47X65X8*
18470	C-R	1187
18470	C-R	47X68X10!
1847386	GMC	474253
18475	OLIVE	473228
18480	C-R	47X70X10!
18480	C-R	714675
18485	C-R	224772
18487	MASSE	473471
18487A	MASSE	473471
18488	C-R	710150
18489	C-R	710143
18489A	MASSE	470950!
18489A	MASSE	6241S
1848OS	JN-MN	415124*
18490	C-R	332062
18492	C-R	332062*
184926	HYST	415138!
184947	HYST	416556!
184947	HYST	472157
1849949	GMC	471442!
185	C-R	5073
185031	JEFF	455330!
185031	O-M	455330!
18505	C-R	224772
1850519M1	PERKI	712139
185064M91	MASSE	7790H
185076	HYST	415041
18510	C-R	8521S
1851001	BR-WN	411376!
18513	C-R	224772
18516	SPICE	473228
1851747M1	MASSE	471272!
18518A	MASSE	472354!
185198	HOUGH	415035=
185198	IH	415035=
185198H1	HOUGH	415035
185209	HOUGH	415035
185209	IH	415035
185209H1	IH	415035
18521013A	HARWA	185X210X13
185210H1	IH	473238=
185215C1	IH	473228!
18528LUP	JN-MN	200X230X15!
18529LUP	JN-MN	130X160X12
185312	JEFF	417196!
18531A	C-R	450398
18531A	C-R	471267!
18532LUP	JN-MN	416670
18535	C-R	8362
18536	C-R	8362
18539A	MASSE	450398
18539A	MASSE	471267!
18539LDS	JN-MN	1979
18542LUP	JN-MN	417362!*
18543	C-R	7934S
185433R91	IH	450143
18544	C-R	350936
1854449	CHRYS	472354!
1854449	GMC	472354!
18545	C-R	472747*
18546	C-R	350936
18546	C-R	4528N
18548	C-R	350936
18549	C-R	353120
18550	C-R	5458
1855001	BR-WN	55532=
18551	C-R	5458
18552	C-R	353120
18553	C-R	473454
18554	C-R	340823
18555	C-R	473454
18555	C-R	710220
18556	C-R	472747
18558	C-R	340823
18558D	IH	473447
18559	C-R	2942
18560	C-R	473454
1856001	BR-WN	417433!
18561	C-R	350936
18562	C-R	350936=
18563	C-R	350936
18564LPD	JN-MN	417513
18565	C-R	473454!
18566	C-R	472439
18567	C-R	473454
18567X	MASSE	471442!
18570	C-R	472439
1857001	BR-WN	415447
1857002	BR-WN	471424!
1857003	BR-WN	471413
1857005	BR-WN	471652
185705R91	IH	6638S
18571	C-R	472439
18575	C-R	472439*
18580	C-R	472439
1858007	BR-WN	416364!
18581	C-R	472439
18583	C-R	472439*
18584	C-R	472439
18587	C-R	40071S
185877	HYST	JV1166
18591	C-R	40071S
18592	C-R	331227H
18595	C-R	472439
18596	C-R	472439
18597	C-R	472439
18598	C-R	331227H
18599	C-R	472439
185FF112	C-R	472354!
185X210X13	SIMRT	185X210X13
185X210X13SC	TRSCM	185X210X13
185X210X13TC	TRSCM	185X210X13
186	C-R	5072
18600	C-R	472439
18601	C-R	472439
18603	C-R	6985
1860325M1	MASSE	470334!
186063	BENDI	415027
18609	C-R	6985
1861	C-R	471733*
18611	C-R	471868*
186110	C-R	473423*
186112	C-R	472354!
186112M1	C-R	472354!
18613	C-R	471868
18614	C-R	470712!
18615	C-R	471736
18615	ROCKW	473232!
18616	C-R	472475*
18617	C-R	471868
18618	C-R	471737
18623	C-R	710388
18624	C-R	470390*
18625	C-R	471868
18626	C-R	471868
18630	C-R	200752
18633	C-R	7107A=
18638	C-R	7107A=
18640	C-R	7107A=
186417	HYST	473239!
186418	HYST	415138!
18647	C-R	472572
1864750	GMC	476838!
18650	C-R	472572!
18651	C-R	472572!
18654	C-R	472572!
1865517	GMC	470059
1865517	GMC	470380!
18656	C-R	472572!
18657	C-R	472572*
18657	C-R	472572!
18658	C-R	472572!
18659	C-R	42421S
18659	SPICE	450039
18660	C-R	472572!
18661	C-R	472572!
18662	C-R	472572
18663	C-R	472572!
18667	C-R	5699
18668	C-R	472572!
18669	C-R	473179!
1866Y	HYST	5M445
1866Y	IH	5M445
18670	C-R	473179!
18671	C-R	473179!
1867150	GMC	471554!
18672	C-R	473179
18673	C-R	473179
18674K	IH	473419
18675	C-R	473179
186756X1	IH	416271!
18676	C-R	473179!
186761	JEFF	470059
186761	JEFF	470380!
186768R91	IH	40769S
186769R91	IH	40769S
18677	C-R	473179!
18678	C-R	473179*
186780	CUMMI	39821
186786R91	IH	40769S
18679	C-R	473179!
18683	C-R	473179
18688	C-R	473179!

! Industrial Size/Type * Minor Width Difference

= The U.S. customer service number is 877-4-TIMKEN. The Canadian customer service numbers are 800-565-4927 (English) and 800-565-0438 (French-Canadian).

Mfr. No.	Name	Zero Duplication or Recommended Industrial
18689	C-R	473179
1868OS	JN-MN	416666
18690	C-R	473179
186908	CUMMI	5010=
18691	C-R	473179
18692	C-R	473179
18693	C-R	414045!
18694	C-R	414045!
18695	C-R	1959
18695	C-R	414045!*
18697	C-R	5699
18698	C-R	414045!
18699	C-R	414045!
1869OS	JN-MN	415066
187	C-R	5092
1870	C-R	HU034A
18708	C-R	5126
18708	C-R	8515N*
18708LPD	JN-MN	415077
18709	C-R	414045!
18709LPD	JN-MN	415116
1870OS	JN-MN	415991
1870OS	JN-MN	455146!
1871	C-R	471733
1871	GOODM	471733
18710	C-R	2689S
18711	C-R	473445
18711LPD	JN-MN	417596
18712	C-R	471735
18714	C-R	470712!
18714M1	C-R	470712
187189R91	IH	40769S
18719	C-R	473238
1872	SPG	224520
1872	SPG	45X60X10!
18720LUP	JN-MN	472029
187212R91	IH	450143
18727	C-R	710337
18728	C-R	471730
1872OS	JN-MN	327303!
18731	C-R	9912
18732	C-R	473238=
18733	C-R	473238!
18734	C-R	473238!
18735	C-R	473238
18736	C-R	473238
18737	C-R	473238=
18743	C-R	473238!
18744	C-R	473238!
18747	C-R	473238
18747A	HEIL	470712!
18747A	HERCU	470712!
18748	C-R	473238!
18750	C-R	473238!*
18754	C-R	473238
18755	C-R	473238!
18757	SPICE	472560N
18757	VIC	472560N
187571	SPICE	472560N
187572	SPICE	472560N
18759AB	CASE	455566
18762	C-R	473238
18763	C-R	5697
18765	C-R	5697
18765A	C-R	470530!
18768	C-R	6064
18769	SIDEW	473214!
18769D	IH	417487
18770	SIDEW	472179
187705	JEFF	415007
18770D	IH	470059
18770D	IH	470380!
18771	C-R	472572
18772	C-R	6064
18778	C-R	5126
18778LUP	JN-MN	475384*
18780	C-R	203034
18784	C-R	6064
18785	C-R	450084!*
187863	CUMMI	417621
18796	C-R	450084!
18797	C-R	450084!
187984H1	IH	471271!
18798LUP	JN-MN	481443!
18799LUP	JN-MN	450516
187G112	C-R	472354!
187H112	C-R	472354!
187H14	C-R	470712!
187HA112	C-R	472354!
187HM112	C-R	472354!
187HM112-Q6	C-R	472354!
187HM112-TB	C-R	472354!
187HMS112	C-R	472354!
187W14	C-R	470712!
187W14M1	C-R	470712
188007	JEFF	455462
1880472	GMC	471466!
18805	C-R	203034*
18807	C-R	450084!
18808	C-R	203034
18809	C-R	450084!
1880BAGE	SABO	4564V
18810	C-R	450084!
18810	KOEH	412861
18810LUP	JN-MN	225875*
18810LUP	JN-MN	58X75X11!*
1881115	GMC	411376!
18813A	MASSE	473227
18814	C-R	473239*
18814	C-R	473239
18814G	VIC	TCS45635
18815	C-R	473239*
18815	C-R	473239
18817	C-R	473239!
18818	C-R	473239
188185	US-EL	472015!
18821	C-R	473239!
18822	C-R	473239!
18823	C-R	473239!*
18824	C-R	473239!
18824G	VIC	TCS45635
18825	C-R	473239!
188252VC	TRSCM	9049
188252VC	TRSCM	9049N
18827	C-R	473239
18828	C-R	473239
188282R1	SELAS	5126
188319	CUMMI	954216T
18832	C-R	473239
18833	C-R	7044NA
18841	OLIVE	473228
18843	C-R	6547
18844D	IH	412473!
18850	C-R	473457!
1885665	GMC	340771
188631	US-EL	415327
1886436	GMC	471137
1886996	GMC	240698
1886T	GERL	64X80X8
1887083	GMC	474253
18872	C-R	473457!*
18874	C-R	473457!
18876	C-R	710255
18879	C-R	473240
18881	C-R	3195
18882	C-R	473240!
18883	C-R	7216
18885	C-R	473458!*
188856	HYST	415035
18886	C-R	473458!*
18887	C-R	6808N
18888	C-R	6808N
18889	C-R	715100
18891	C-R	9316
18896	C-R	719316
1889633	ALLCH	473436
1889633	GMC	473436
18897	C-R	710356
18898	OLIVE	416125!
18898	WHITE	416125!
18899	C-R	473458!
1889A3	DIA	472157
1889A3	WHITE	472157
189	C-R	5072
1890	C-R	HU009A
18900	OLIVE	473234
189005	JEFF	472354!
18902	C-R	473458!*
18911	C-R	451078!
18912	C-R	7216
18914	C-R	7216
18914LUP	JN-MN	412871!
18915	C-R	410524
18916	C-R	410524*
18918	C-R	410524*
1891820	FMC	471442!
189210	VICK	8059S
18922	C-R	451078!
18924	TMTR	472560N
189242SB	TRSCM	8704S
189254R91	IH	416130!
18926	C-R	477609*=
189311R1	IH	471689!
18932D	IH	416738!
18932D	IH	450096
189381R91	IH	415060
189381R91	IH	455060
1893OS	JN-MN	415058
1894OS	JN-MN	417536
18950	C-R	6127
1895028	GMC	471765!
18951	C-R	224865
18952	C-R	224840
18952	C-R	48X68X10!
18953	C-R	224840
18955	C-R	224820
18955	C-R	48X62X8!
18956	C-R	48X62X8V
18957	C-R	48X62X8V
18958	C-R	224820
18959	C-R	710167
18961	C-R	7105S
18962	C-R	224820
18962	C-R	48X62X8!
18963	C-R	224810
18963	C-R	48X62X8!
18964	C-R	1956
18965	C-R	1973
18965	C-R	48X65X10!
18965	CLARK	370021A
189652	CUMMI	5026$
18966	C-R	1977
18966	C-R	48X65X10V!
18966	C-R	716484
18967	C-R	224865
18967	C-R	48X65X10!
18968	C-R	224835
18968	C-R	224840*
18968	C-R	48X68X10!*
18969	C-R	224835
1896RC	SUL	416865!
18970	C-R	1994
18970	C-R	48X70X8
18970	C-R	48X70X9!
18970	C-R	710313*
18971	C-R	1994
18971	C-R	712010
18972	C-R	1208
18972	C-R	48X72X7!
18973	C-R	224872
18973	C-R	48X72X8V!
18974	C-R	224874
18975	C-R	48X75X10
18976	C-R	224872
18976	C-R	48X72X7!
18977	C-R	224850
18979	C-R	224870
18981	C-R	48X80X8
18982	C-R	48X82X8
18983	C-R	224979
18985	C-R	48X85X8
18986	C-R	48X80X8
18990	C-R	9049
18990	C-R	9049N
18991	C-R	48X90X10
18992	C-R	4333N
18994	C-R	714503
18995	C-R	9449
18997	C-R	344032
18998	C-R	5208
189V539P1	GE	472016
18BX1	TRACS	417491
18BX1	WHITE	417491
18BX10	TRACS	417357
18BX10	TRACS	455192!
18BX10	WHITE	417357
18BX10	WHITE	455192!
18BX4	WHITE	417316!
18BX5	TRACS	415991
18BX5	TRACS	455146!
18BX5	WHITE	415991
18BX5	WHITE	455146!
18BX7	TRACS	415219
18BX7	WHITE	415219
18BX8	TRACS	415124
18BX8	WHITE	415124
18BX9	TRACS	417546!
18BX9	WHITE	417546!
18F681D1	HARN	471442!
18F681D10	HARN	471529
18F681D100	HARN	410825
18F681D102	HARN	411245!
18F681D103	HARN	417073
18F681D104	HARN	471271!
18F681D105	HARN	415449!
18F681D106	HARN	416273!
18F681D107	HARN	413479
18F681D108	HARN	415988
18F681D109	HARN	417481
18F681D11	HARN	471538!
18F681D110	HARN	412871!
18F681D111	HARN	417343!
18F681D112	HARN	415007
18F681D113	HARN	455434
18F681D114	HARN	455151
18F681D115	HARN	455008
18F681D116	HARN	416664!
18F681D117	HARN	417316!

! Industrial Size/Type * Minor Width Difference $ F-M Number Is Part Of A Kit
= The U.S. customer service number is 877-4-TIMKEN. The Canadian customer service numbers are 800-565-4927 (English) and 800-565-0438 (French-Canadian).

Mfr. No.	Name	Zero Duplication or Recommended Industrial
18F681D118	HARN	415960!
18F681D119	HARN	455005
18F681D12	HARN	471579
18F681D120	HARN	417485
18F681D121	HARN	475384
18F681D122	HARN	417344!
18F681D123	HARN	416921!
18F681D124	HARN	417134
18F681D125	HARN	416956
18F681D126	HARN	416654!
18F681D127	HARN	417486
18F681D128	HARN	415995!
18F681D129	HARN	417351!
18F681D130	HARN	417487
18F681D131	HARN	55155=
18F681D132	HARN	455015
18F681D135	HARN	417621!
18F681D136	HARN	416288!
18F681D137	HARN	417171!
18F681D138	HARN	456105
18F681D139	HARN	455336
18F681D14	HARN	471554!
18F681D140	HARN	455022
18F681D141	HARN	476470
18F681D142	HARN	417181!
18F681D143	HARN	415023
18F681D144	HARN	416292
18F681D145	HARN	415085!
18F681D145	HARN	456648
18F681D146	HARN	455024
18F681D147	HARN	415442!
18F681D147	HARN	55442
18F681D148	HARN	417191
18F681D148	HARN	456585
18F681D149	HARN	415025
18F681D15	HARN	471567!
18F681D151	HARN	417492
18F681D152	HARN	455026
18F681D154	HARN	415991
18F681D154	HARN	455146!
18F681D155	HARN	417196!
18F681D156	HARN	415437
18F681D156	HARN	415437!
18F681D157	HARN	415027!
18F681D157	HARN	415027
18F681D158	HARN	415498
18F681D159	HARN	417497
18F681D16	HARN	471231!
18F681D160	HARN	55028
18F681D161	HARN	416332!
18F681D162	HARN	415937!
18F681D163	HARN	416125!
18F681D165	HARN	417501
18F681D166	HARN	55030
18F681D167	HARN	415379
18F681D167	HARN	415379!
18F681D168	HARN	416339
18F681D168	HARN	455031!
18F681D169	HARN	415150!
18F681D17	HARN	474253
18F681D170	HARN	455178=
18F681D171	HARN	455032!
18F681D172	HARN	455189
18F681D173	HARN	417210!
18F681D174	HARN	416345!
18F681D174	HARN	455033
18F681D175	HARN	417366!
18F681D176	HARN	415034!
18F681D177	HARN	455191
18F681D178	HARN	417506
18F681D179	HARN	415187
18F681D18	HARN	471645
18F681D180	HARN	415035!
18F681D180	HARN	415035
18F681D181	HARN	417357
18F681D181	HARN	455192!
18F681D182	HARN	415036
18F681D183	HARN	55193=
18F681D184	HARN	455037
18F681D186	HARN	415142
18F681D187	HARN	417512
18F681D188	HARN	415043
18F681D189	HARN	455194
18F681D19	HARN	471267!
18F681D190	HARN	417513
18F681D191	HARN	417514
18F681D192	HARN	472157
18F681D192	HARN	472157!
18F681D193	HARN	416556!
18F681D193	HARN	472157
18F681D194	HARN	416891!
18F681D195	HARN	415045!
18F681D196	HARN	455197N
18F681D197	HARN	417520
18F681D198	HARN	416144
18F681D199	HARN	415196!
18F681D20	HARN	471570!
18F681D200	HARN	415047
18F681D201	HARN	416149
18F681D202	HARN	55199=
18F681D203	HARN	417525
18F681D204	HARN	417526
18F681D205	HARN	327303!
18F681D206	HARN	416888!
18F681D207	HARN	416153!
18F681D208	HARN	416892!
18F681D209	HARN	417533
18F681D21	HARN	471646!
18F681D210	HARN	417534
18F681D211	HARN	457585
18F681D212	HARN	415371
18F681D213	HARN	416158
18F681D214	HARN	415064
18F681D215	HARN	415284
18F681D216	HARN	417535
18F681D217	HARN	417536
18F681D218	HARN	415138!
18F681D219	HARN	417247!
18F681D22	HARN	471571
18F681D220	HARN	415066
18F681D221	HARN	416163
18F681D222	HARN	456890
18F681D223	HARN	455614
18F681D224	HARN	416167!
18F681D225	HARN	417267
18F681D226	HARN	417269!
18F681D227	HARN	417539!
18F681D228	HARN	417273
18F681D229	HARN	417540
18F681D23	HARN	471647
18F681D230	HARN	416865!
18F681D231	HARN	417541
18F681D232	HARN	417546!
18F681D233	HARN	417547
18F681D234	HARN	417262!
18F681D235	HARN	415645!
18F681D235	HARN	455104
18F681D236	HARN	417551
18F681D237	HARN	415938
18F681D238	HARN	417254
18F681D239	HARN	416107!
18F681D239	HARN	455073
18F681D24	HARN	472951
18F681D24	HARN	474252
18F681D240	HARN	417555!
18F681D241	HARN	417556
18F681D242	HARN	417362!
18F681D243	HARN	416666
18F681D244	HARN	416476!
18F681D245	HARN	455297
18F681D247	HARN	455330!
18F681D248	HARN	457874
18F681D249	HARN	55316=
18F681D25	HARN	471224!
18F681D250	HARN	417562
18F681D251	HARN	55242
18F681D252	HARN	417563
18F681D253	HARN	415294!
18F681D254	HARN	416229
18F681D255	HARN	417298
18F681D256	HARN	415327
18F681D257	HARN	417596
18F681D258	HARN	455584
18F681D259	HARN	416364!
18F681D26	HARN	471649!
18F681D260	HARN	416239!
18F681D261	HARN	416077
18F681D262	HARN	415116
18F681D263	HARN	455117
18F681D264	HARN	415317
18F681D265	HARN	415867
18F681D266	HARN	415551
18F681D267	HARN	417598
18F681D268	HARN	455406!
18F681D27	HARN	471689!
18F681D270	HARN	455397
18F681D271	HARN	455121
18F681D272	HARN	417600
18F681D273	HARN	417601
18F681D274	HARN	455123
18F681D276	HARN	415124
18F681D277	HARN	417022
18F681D278	HARN	417603!
18F681D28	HARN	480210!
18F681D280	HARN	417567
18F681D281	HARN	415128
18F681D282	HARN	455129
18F681D283	HARN	455462
18F681D284	HARN	415090
18F681D285	HARN	415219
18F681D286	HARN	417606
18F681D287	HARN	55078S
18F681D288	HARN	55223=
18F681D289	HARN	417605
18F681D29	HARN	471651
18F681D290	HARN	417020
18F681D291	HARN	417570
18F681D292	HARN	415227!
18F681D293	HARN	55228=
18F681D294	HARN	415482
18F681D295	HARN	415077
18F681D297	HARN	473232
18F681D298	HARN	415085!
18F681D298	HARN	456648
18F681D299	HARN	415072
18F681D3	HARN	471472!
18F681D30	HARN	471705!
18F681D300	HARN	472636!
18F681D301	HARN	415711
18F681D302	HARN	471750!
18F681D303	HARN	415001!
18F681D304	HARN	450104
18F681D305	HARN	416865!
18F681D306	HARN	417491
18F681D307	HARN	417490
18F681D308	HARN	415023
18F681D309	HARN	415021
18F681D31	HARN	471652
18F681D31	HARN	482208!
18F681D310	HARN	471192
18F681D311	HARN	415196!
18F681D313	HARN	415991
18F681D313	HARN	455146!
18F681D314	HARN	417211!
18F681D315	HARN	473214
18F681D316	HARN	415035
18F681D316	HARN	415035!
18F681D317	HARN	450084!
18F681D318	HARN	473243
18F681D319	HARN	473458!
18F681D32	HARN	471692!
18F681D320	HARN	472409!
18F681D321	HARN	412861
18F681D322	HARN	411253!
18F681D323	HARN	412473!
18F681D324	HARN	470059
18F681D324	HARN	470380!
18F681D325	HARN	410987!
18F681D326	HARN	413469!
18F681D327	HARN	471795
18F681D328	HARN	471820
18F681D329	HARN	415458!
18F681D33	HARN	471763
18F681D330	HARN	472409!
18F681D332	HARN	455129
18F681D334	HARN	417509
18F681D335	HARN	417223
18F681D336	HARN	412943
18F681D337	HARN	55358=
18F681D338	HARN	471103!
18F681D339	HARN	416282
18F681D34	HARN	470328
18F681D34	HARN	481213!
18F681D340	HARN	410102
18F681D341	HARN	471785!
18F681D343	HARN	417356!
18F681D343	HARN	455188
18F681D344	HARN	50478
18F681D345	HARN	470354
18F681D346	HARN	470605!
18F681D347	HARN	417511
18F681D348	HARN	413246
18F681D349	HARN	415077
18F681D35	HARN	473426
18F681D350	HARN	455144
18F681D351	HARN	417349
18F681D352	HARN	493291
18F681D353	HARN	43086S
18F681D355	HARN	415259!
18F681D356	HARN	470682
18F681D357	HARN	416404!
18F681D358	HARN	417172
18F681D359	HARN	417158!
18F681D36	HARN	474255
18F681D360	HARN	418028
18F681D360	HARN	455137!
18F681D361	HARN	55353
18F681D362	HARN	40071S
18F681D363	HARN	40097S
18F681D364	HARN	417211!
18F681D365	HARN	6547
18F681D367	HARN	46997S
18F681D37	HARN	471413
18F681D372	HARN	417350!
18F681D374	HARN	450808
18F681D375	HARN	473462
18F681D377	HARN	40169S
18F681D379	HARN	470898

! Industrial Size/Type
= The U.S. customer service number is 877-4-TIMKEN. The Canadian customer service numbers are 800-565-4927 (English) and 800-565-0438 (French-Canadian).

Mfr. No.	Name	Zero Duplication or Recommended Industrial
18F681D38	HARN	471766!
18F681D380	HARN	470334!
18F681D381	HARN	415482
18F681D383	HARN	415142
18F681D39	HARN	450165
18F681D39	HARN	471801!
18F681D4	HARN	471281!
18F681D40	HARN	470050
18F681D42	HARN	450165
18F681D42	HARN	471801!
18F681D43	HARN	450129
18F681D43	HARN	472826!
18F681D44	HARN	473211!
18F681D45	HARN	473213!
18F681D46	HARN	472287!
18F681D47	HARN	473215!
18F681D48	HARN	471835!
18F681D49	HARN	473016!
18F681D5	HARN	471535!
18F681D50	HARN	473225!
18F681D51	HARN	473437
18F681D52	HARN	473227
18F681D53	HARN	473228
18F681D54	HARN	474281!
18F681D55	HARN	472213
18F681D56	HARN	473229
18F681D57	HARN	473441
18F681D58	HARN	473367!
18F681D58	HARN	473367
18F681D59	HARN	473010
18F681D6	HARN	471551!
18F681D60	HARN	474274
18F681D61	HARN	473234
18F681D62	HARN	473235!
18F681D63	HARN	473236!
18F681D64	HARN	472185!
18F681D65	HARN	472179
18F681D66	HARN	471141!
18F681D67	HARN	472070
18F681D68	HARN	473449
18F681D69	HARN	473450
18F681D7	HARN	471466!
18F681D70	HARN	472439
18F681D71	HARN	473238
18F681D72	HARN	473457!
18F681D75	HARN	472144!
18F681D76	HARN	473460
18F681D77	HARN	471391!
18F681D78	HARN	352541
18F681D79	HARN	472924!
18F681D80	HARN	470530!
18F681D81	HARN	472397!
18F681D83	HARN	451948
18F681D84	HARN	472012
18F681D85	HARN	450311
18F681D86	HARN	470898!
18F681D87	HARN	472015!
18F681D88	HARN	472016
18F681D89	HARN	472234
18F681D9	HARN	471255!
18F681D90	HARN	473245!
18F681D92	HARN	471341!
18F681D93	HARN	411376!
18F681D94	HARN	55337
18F681D95	HARN	411394!
18F681D96	HARN	410694!
18F681D97	HARN	416444
18F681D98	HARN	412119!
18F681D99	HARN	416271!
18F682D1	HARN	471442!
18F682D10	HARN	471529
18F682D100	HARN	417073
18F682D101	HARN	471271!
18F682D102	HARN	415449!
18F682D103	HARN	416273!
18F682D104	HARN	413479
18F682D105	HARN	415988
18F682D106	HARN	417481
18F682D107	HARN	412871!
18F682D108	HARN	417343!
18F682D109	HARN	415007
18F682D11	HARN	471538!
18F682D110	HARN	455434
18F682D111	HARN	455151
18F682D112	HARN	455008
18F682D113	HARN	416664!
18F682D114	HARN	417316!
18F682D115	HARN	415960!
18F682D116	HARN	455005
18F682D117	HARN	417485
18F682D118	HARN	475384
18F682D119	HARN	417344!
18F682D12	HARN	471579
18F682D120	HARN	416921!
18F682D121	HARN	417134
18F682D122	HARN	416956
18F682D123	HARN	416654!
18F682D124	HARN	417486
18F682D125	HARN	415995!
18F682D126	HARN	417351!
18F682D127	HARN	417487
18F682D128	HARN	55155=
18F682D129	HARN	455015
18F682D131	HARN	417621!
18F682D132	HARN	416288!
18F682D133	HARN	417171!
18F682D134	HARN	456105
18F682D135	HARN	455336
18F682D136	HARN	455022
18F682D137	HARN	476470
18F682D138	HARN	417181!
18F682D139	HARN	415023
18F682D14	HARN	471554!
18F682D140	HARN	455024
18F682D141	HARN	417191
18F682D141	HARN	456585
18F682D142	HARN	415025
18F682D143	HARN	417492
18F682D144	HARN	455026
18F682D145	HARN	415991
18F682D145	HARN	455146!
18F682D146	HARN	415991
18F682D146	HARN	455146!
18F682D147	HARN	417196!
18F682D148	HARN	415437
18F682D149	HARN	415027!
18F682D149	HARN	415027
18F682D15	HARN	471567!
18F682D150	HARN	415498
18F682D151	HARN	417497
18F682D152	HARN	55028
18F682D153	HARN	416332!
18F682D154	HARN	415937!
18F682D155	HARN	416125!
18F682D156	HARN	417501
18F682D158	HARN	415379!
18F682D158	HARN	415379
18F682D159	HARN	416339
18F682D159	HARN	455031!
18F682D16	HARN	471231!
18F682D160	HARN	415150!
18F682D161	HARN	455032!
18F682D162	HARN	455189
18F682D163	HARN	416345!
18F682D163	HARN	455033
18F682D164	HARN	417366!
18F682D165	HARN	417366!
18F682D166	HARN	415034!
18F682D167	HARN	455191
18F682D168	HARN	417506
18F682D169	HARN	415035
18F682D169	HARN	415035!
18F682D17	HARN	474253
18F682D170	HARN	417357
18F682D170	HARN	455192!
18F682D171	HARN	415036
18F682D173	HARN	455037
18F682D175	HARN	415142
18F682D176	HARN	417512
18F682D177	HARN	415043
18F682D178	HARN	455194
18F682D179	HARN	417513
18F682D18	HARN	471645
18F682D180	HARN	417514
18F682D181	HARN	472157
18F682D181	HARN	472157!
18F682D182	HARN	416556!
18F682D182	HARN	472157
18F682D183	HARN	416891!
18F682D184	HARN	415045!
18F682D185	HARN	455197N
18F682D186	HARN	417520
18F682D187	HARN	416144
18F682D188	HARN	415196!
18F682D189	HARN	415047
18F682D19	HARN	471267!
18F682D190	HARN	416149
18F682D192	HARN	417525
18F682D193	HARN	417526
18F682D194	HARN	416888!
18F682D195	HARN	416153!
18F682D196	HARN	416892!
18F682D197	HARN	417533
18F682D198	HARN	417534
18F682D199	HARN	457585
18F682D20	HARN	471570!
18F682D200	HARN	415371
18F682D201	HARN	416158
18F682D202	HARN	415064
18F682D203	HARN	415284
18F682D204	HARN	417535
18F682D205	HARN	417536
18F682D206	HARN	415138!
18F682D207	HARN	417247!
18F682D208	HARN	415066
18F682D209	HARN	416163
18F682D21	HARN	471646!
18F682D210	HARN	456890
18F682D211	HARN	416167!
18F682D212	HARN	417267
18F682D213	HARN	417269!
18F682D214	HARN	417539!
18F682D215	HARN	417273
18F682D216	HARN	417540
18F682D217	HARN	416865!
18F682D218	HARN	417541
18F682D219	HARN	417546!
18F682D22	HARN	471571
18F682D220	HARN	417547
18F682D221	HARN	417262!
18F682D222	HARN	415645!
18F682D222	HARN	455104
18F682D223	HARN	417551
18F682D224	HARN	415938
18F682D225	HARN	417254
18F682D226	HARN	416107!
18F682D226	HARN	455073
18F682D227	HARN	417555!
18F682D228	HARN	417556
18F682D229	HARN	417362!
18F682D23	HARN	471647
18F682D230	HARN	416666
18F682D231	HARN	416476!
18F682D232	HARN	455297
18F682D233	HARN	415072
18F682D234	HARN	455330!
18F682D235	HARN	55316=
18F682D236	HARN	417562
18F682D238	HARN	417563
18F682D239	HARN	415294!
18F682D24	HARN	472951
18F682D24	HARN	474252
18F682D240	HARN	416229
18F682D241	HARN	417298
18F682D242	HARN	415327
18F682D244	HARN	455584
18F682D245	HARN	416364!
18F682D246	HARN	416239!
18F682D247	HARN	416077
18F682D248	HARN	415116
18F682D249	HARN	455117
18F682D25	HARN	471224!
18F682D250	HARN	415317
18F682D251	HARN	415867
18F682D252	HARN	415551
18F682D253	HARN	417598
18F682D254	HARN	455406!
18F682D255	HARN	455397
18F682D256	HARN	455121
18F682D257	HARN	417600
18F682D258	HARN	417601
18F682D259	HARN	417602!
18F682D26	HARN	471649!
18F682D260	HARN	415124
18F682D261	HARN	415124
18F682D262	HARN	417022
18F682D263	HARN	417604
18F682D264	HARN	415128
18F682D265	HARN	455129
18F682D266	HARN	455129
18F682D267	HARN	455462
18F682D268	HARN	415090
18F682D269	HARN	415219
18F682D27	HARN	471689!
18F682D271	HARN	55078S
18F682D272	HARN	55223=
18F682D273	HARN	417605
18F682D274	HARN	417020
18F682D275	HARN	417570
18F682D276	HARN	7639S
18F682D277	HARN	55228=
18F682D278	HARN	415482
18F682D28	HARN	480210!
18F682D280	HARN	417608
18F682D282	HARN	415725!
18F682D283	HARN	415984!
18F682D284	HARN	416404!
18F682D285	HARN	415072
18F682D286	HARN	415041
18F682D289	HARN	415483!
18F682D29	HARN	471651
18F682D290	HARN	471766!
18F682D291	HARN	456141
18F682D292	HARN	415482
18F682D293	HARN	472636!
18F682D294	HARN	417134
18F682D296	HARN	472015!
18F682D297	HARN	455191

! Industrial Size/Type
= The U.S. customer service number is 877-4-TIMKEN. The Canadian customer service numbers are 800-565-4927 (English) and 800-565-0438 (French-Canadian).

Mfr. No.	Name	Zero Duplication or Recommended Industrial
18F682D298	HARN	473238
18F682D299	HARN	417604
18F682D3	HARN	471472!
18F682D30	HARN	471705!
18F682D301	HARN	450362
18F682D302	HARN	471688
18F682D303	HARN	471413
18F682D305	HARN	470625!
18F682D306	HARN	416706!
18F682D307	HARN	415085!
18F682D307	HARN	456648
18F682D308	HARN	418028
18F682D308	HARN	455137!
18F682D309	HARN	417492
18F682D31	HARN	471652
18F682D310	HARN	415351!
18F682D311	HARN	415196!
18F682D313	HARN	455476
18F682D314	HARN	417354!
18F682D315	HARN	417357
18F682D315	HARN	455192!
18F682D316	HARN	415142
18F682D317	HARN	457874
18F682D32	HARN	471692!
18F682D321	HARN	417158!
18F682D322	HARN	417171!
18F682D323	FUNK	415379!
18F682D323	FUNK	415379
18F682D323	HARN	415379
18F682D323	HARN	415379!
18F682D325	HARN	413246
18F682D326	HARN	55353
18F682D327	HARN	415871
18F682D328	HARN	415991
18F682D328	HARN	455146!
18F682D329	HARN	412473!
18F682D33	HARN	471763
18F682D330	HARN	417511
18F682D332	HARN	417362!
18F682D333	HARN	413247!
18F682D334	HARN	417172
18F682D335	HARN	417603!
18F682D336	HARN	473232
18F682D337	HARN	416154!
18F682D338	HARN	455480!
18F682D339	HARN	240356
18F682D34	HARN	473426
18F682D340	HARN	240735
18F682D341	HARN	240733
18F682D343	HARN	417608
18F682D345	HARN	340210
18F682D346	HARN	340724!
18F682D347	HARN	254270
18F682D349	HARN	455194
18F682D35	HARN	474255
18F682D356	HARN	415196!
18F682D36	HARN	471766!
18F682D363	HARN	470380!
18F682D364	HARN	472179
18F682D37	HARN	450165
18F682D37	HARN	471801!
18F682D375	HARN	417488!
18F682D376	HARN	417210!
18F682D378	HARN	472354!
18F682D379	HARN	450808
18F682D38	HARN	470050
18F682D381	HARN	471785!
18F682D382	HARN	471750!
18F682D383	HARN	471795
18F682D384	HARN	450129
18F682D384	HARN	472826!
18F682D385	HARN	471192
18F682D386	HARN	473214
18F682D387	HARN	471820
18F682D388	HARN	470682
18F682D389	HARN	450084!
18F682D390	HARN	473458!
18F682D391	HARN	473462
18F682D392	HARN	410102
18F682D393	HARN	472409!
18F682D394	HARN	473243
18F682D395	HARN	413469!
18F682D396	HARN	470354
18F682D397	HARN	412943
18F682D398	HARN	411253!
18F682D399	HARN	415259!
18F682D4	HARN	471281!
18F682D40	HARN	450165
18F682D40	HARN	471801!
18F682D400	HARN	410987!
18F682D401	HARN	412861
18F682D402	HARN	415001!
18F682D403	HARN	415458!
18F682D404	HARN	455144
18F682D405	HARN	417349!
18F682D406	HARN	417350!
18F682D407	HARN	415021
18F682D408	HARN	417491
18F682D409	HARN	418029!
18F682D410	HARN	416624!
18F682D411	HARN	455178=
18F682D412	HARN	417356!
18F682D413	HARN	417509
18F682D414	HARN	417223
18F682D415	HARN	455129
18F682D416	HARN	415090
18F682D419	HARN	416292
18F682D42	HARN	473211!
18F682D422	HARN	455614
18F682D43	HARN	473213!
18F682D434	HARN	474281!
18F682D435	HARN	470898
18F682D436	HARN	410190
18F682D437	HARN	472164!
18F682D44	HARN	472287!
18F682D45	HARN	473215!
18F682D46	HARN	471835!
18F682D47	HARN	473016!
18F682D48	HARN	473225!
18F682D49	HARN	473437
18F682D5	HARN	471535!
18F682D50	HARN	473227
18F682D51	HARN	473228
18F682D52	HARN	474281!
18F682D53	HARN	472213
18F682D54	HARN	473229
18F682D55	HARN	473441
18F682D56	HARN	473367!
18F682D56	HARN	473367
18F682D57	HARN	473010
18F682D58	HARN	474274
18F682D59	HARN	473234
18F682D6	HARN	471551!
18F682D60	HARN	473235!
18F682D61	HARN	473236!
18F682D62	HARN	472185!
18F682D63	HARN	472179
18F682D64	HARN	471141!
18F682D65	HARN	472070
18F682D66	HARN	473449
18F682D67	HARN	473450
18F682D68	HARN	472439
18F682D69	HARN	473238
18F682D7	HARN	471466!
18F682D70	HARN	473457!
18F682D72	HARN	473457!
18F682D73	HARN	472144!
18F682D74	HARN	473460
18F682D75	HARN	471391!
18F682D76	HARN	472924!
18F682D77	HARN	470530!
18F682D78	HARN	472397!
18F682D79	HARN	473463
18F682D80	HARN	451948
18F682D81	HARN	472012
18F682D82	HARN	450311
18F682D83	HARN	470898!
18F682D84	HARN	472015!
18F682D85	HARN	472016
18F682D86	HARN	472234
18F682D87	HARN	473245!
18F682D88	HARN	413472
18F682D89	HARN	471341!
18F682D9	HARN	471255!
18F682D90	HARN	411376!
18F682D92	HARN	411394!
18F682D93	HARN	410694!
18F682D94	HARN	416444
18F682D95	HARN	412119!
18F682D96	HARN	416271!
18F682D97	HARN	410825
18F682D98	HARN	411500
18F682D99	HARN	411245!
18F689D1	HARN	417488!
18F689D10	HARN	415960
18F689D11	HARN	471224
18F689D4	HARN	415001!
18F689D6	HARN	5759=
18F689D7	HARN	416865!
18F689D8	HARN	415371
18F728	HARN	417603!
18G20	OSHKO	415023
18T12	ATHEY	415960!
18UV-0653	WHITE	473215!
18UVA0653	WHITE	450593!
18X28X6SC	TRSCM	18X28X6
18X28X6TC	TRSCM	18X28X6
18X30X7SC	TRSCM	18X30X7!
18X30X7TC	TRSCM	18X30X7!
18X32X7AN(35)	ISP	18X32X7
18X32X8SC	TRSCM	18X32X8
18X32X8TC	TRSCM	18X32X8
18X35X7	FORSH	18X35X7
18X35X7	SIMRT	18X35X7
18X35X7SC	TRSCM	18X35X7
18X35X7TC	TRSCM	18X35X7
18X37X8SC	TRSCM	18X37X8
18X37X8TC	TRSCM	18X37X8
18X38X7SC	TRSCM	18X38X7
18X38X7TC	TRSCM	18X38X7
18X40X7SC	TRSCM	18X40X7
18X40X7TC	TRSCM	18X40X7
18Z1202	HARN	40555
18Z1202	HARN	40555S!
18Z1583D1	HARN	471652
18Z1583D2	HARN	471766!
18Z1583D3	HARN	471795
18Z1583D5	HARN	473228!
18Z1598D4	HARN	40097S
18Z1600D1	HARN	340210
18Z1600D2	HARN	340724!
18Z1601D1	HARN	240356
18Z1754D2	HARN	493291
18Z2112D2	HARN	200856
18Z2250	FUNK	471984
18Z23	HARN	415351!
18Z2555D36	HARN	410102
18Z2783	HARN	J1120=
18Z410	HARN	417022
18Z715D1	HARN	417546!
18Z715D12	HARN	415124
18Z715D13	HARN	415960!
18Z715D15	HARN	417211!
18Z715D23	FUNK	417365
18Z715D6	HARN	415995!
18Z715D7	HARN	410930=
18Z715D8	HARN	416892!
18Z715D9	HARN	416107!
18Z728	HARN	417603!
18Z778	HARN	415725!
1900-044-009	WARNR	710403
1900-044-009A	FORD	710403
1900-044-009A	WARNR	710403
1900-044-012	WARNR	4333N
1900-044-013	WARNR	4503N
19000	C-R	8704S
190000	SPG	712106
190001	SPG	712111
19003	ONAN	473231!
19004	C-R	9913
1900420	GMC	471558
1900862	GMC	50010
19009	C-R	470625!
19010	C-R	5573$
19011	C-R	5573$
190119	BR-ST	240356
19012	C-R	5573
190127	BR-ST	471224
19013	C-R	6815
19014	SUPER	416271!
19020	C-R	473238
190206	BR-ST	472492!
19021	AT-PL	200763
19024172	EL-PA	417316!
190302	BR-ST	471532
19032	C-R	473239
190324	BR-ST	50405
19037	BR-ST	471651
190371	BR-ST	471651
190397	CUMMI	J1396
190398	CUMMI	J1397*=
190434	JEFF	450284=
190458M1	MASSE	416444
19046	BR-ST	474278!
19046	OLIVE	417316!
190466M1	MASSE	8338=
190469	BR-ST	470954
1905523	FMC	240027=
190596R91	IH	470954
19060	C-R	472572
1906118	FMC	471554!
19062	AIRCO	416332!
19062LDS	JN-MN	472164!
1906526	GMC	450129
1906526	GMC	472826!
19067A	HERCU	5MR71
1907D5	WHITE	410825
19084LDS	JN-MN	3395!
19084LDS	JN-MN	352444
190850	JEFF	473234
1908656	GMC	473438
19090	C-R	4904
19092	C-R	224840
19094	C-R	710161
1909498	GMC	472560N!
19095	C-R	1960
19095	C-R	710305
19097	C-R	4904

! Industrial Size/Type * Minor Width Difference $ F-M Number Is Part Of A Kit
= The U.S. customer service number is 877-4-TIMKEN. The Canadian customer service numbers are 800-565-4927 (English) and 800-565-0438 (French-Canadian).

Mfr. No.	Name	Zero Duplication or Recommended Industrial
1909851	GMC	471466!
19099	OLIVE	473232
1909957	GMC	450065
190X220X16SC	TRSCM	190X220X16
190X220X16TC	TRSCM	190X220X16
190X230X13	SIMRT	190X230X13
190X230X16SC	TRSCM	190X230X16
190X230X16TC	TRSCM	190X230X16
191	C-R	5591
19100	C-R	710148
19102	EATON	713750
1910379	GMC	6324S=
19109	FULLE	713750
19112	MICH	471532
1912235	GMC	474278!
19125	MICH	473405
19125	UNIVE	473405
19127LDS	JN-MN	416147
19137	MICH	471558
19137	UNIVE	471558*
191383	US-EL	330385
19138LUP	JN-MN	455584*
19146LDS	JN-MN	416268
19160	WHITE	414045!
1917999	GMC	480210!
1918047	GMC	471231!
191833	JEFF	417601
191876	WAUKE	471413!
19188	DIVCO	5M293
191887	KRSE	412920!
19190	DIVCO	470530!
19195	EATON	410987!
192	C-R	2261
19200	C-R	1936
19207A	C-R	415960
19210	C-R	474269!
19210	KINGN	471766!
19211	C-R	710058
19212	C-R	474269
19214	C-R	6815
19215	C-R	470409
19215	C-R	50409
19217	C-R	471195!
19218	C-R	6815
19218A	C-R	470898
19219	C-R	6815
1921B	GOODM	413247!
19220	C-R	471195!
19221	C-R	6815
19223	C-R	9150S
192238	HYST	200861
192239	HYST	JV933
19224	C-R	472319
192249	HYST	200854
19225	C-R	472319
192250	HYST	JV1215=
19226	C-R	472319
19227	C-R	472319=
1922774	CHRYS	410825
19229	C-R	472319
1922A3	DIA	412119=
1922A3	WHITE	412119=
19230	C-R	472319
19231	C-R	473459
19232	C-R	473459
19234	C-R	3173
19234	EATON	415458!
19235	EATON	473464!
19235	EATON	473464
19236	C-R	3173
19236	C-R	473459!
19237	C-R	3173
19237	C-R	473459!
19238	C-R	5759=
19239	C-R	473459
1923936	CHRYS	470898
1923937	CHRYS	471341!
19240	C-R	473459*
19241	C-R	473459
19242	C-R	473459
19243	C-R	473459*
19244	C-R	3173
19245	C-R	473459
19246	C-R	473459
19247	C-R	473459
19248	C-R	473459
19249	C-R	473459
192527C1	IH	472179
192528C1	IH	471984
19253TB	TRSCM	471195!
19255	C-R	710928
192572KMJ	TRSCM	9150S
1925822	CHRYS	456618
1925823	CHRYS	6532S=
19259	C-R	450655=
19259C	IH	473215!
19259D	IH	473215!
19262	C-R	473241
19263TB	TRSCM	473814
19264	C-R	473241
19265SP	TRSCM	5121
19267	C-R	473241
192683SSB	TRSCM	473459
192683TB	TRSCM	473459!
192683VTB	TRSCM	473459
19269	C-R	450279
1926D	GOODM	413246
19271	C-R	2043
1927131	GM	427
1927131	GM	427RR
1927290	TAYLR	J1109
1927291	TAYLR	J1135=
1927293	TAYLR	J1136
1927295	CHRYS	417316!
19273	C-R	2043
19274	C-R	451117N=
1927475	TAYLR	345035
1927550	TAYLR	472492!
1927575	TAYLR	417316!
1927590	TAYLR	417269!
192765TB	TRSCM	2043
19277	C-R	8622
1927C	GOODM	413247!
1927D	GOODM	413247!
19281	DIVCO	473203
192815TCJ	TRSCM	8622
19283SB	TRSCM	472144
19284	OLIVE	473215!
19285	C-R	472144!
19286	C-R	472144!
19288	C-R	472144!
1928B	GOODM	416271!
1928D	GOODM	472636!
19291	C-R	472144!
19295	C-R	472144!*
19296	C-R	472144!*
19297	C-R	472144!*
192J	OSHKO	470950!
192J	OSHKO	6241S
1930	TMTR	473212!
19300	C-R	472144!
19301	C-R	472144!
19303TB	TRSCM	472394
19305	C-R	5531
193089	HYST	417362!
19309	C-R	472144!*
19311	C-R	472144!*
1931105	CHRYS	9773
19313	C-R	9150S
19314	C-R	3896
19315TB	TRSCM	471391!
19318	C-R	470530!
193183SL	TRSCM	473462
193201	BENDI	240414
1932011018	WABCO	240009
1932011218	WABCO	343185
1932011623	WABCO	240414
193201218	WABCO	343185
193207A	HARWA	19X32X8
193210	HYST	417362!
19322	C-R	473460
19324	C-R	710394
19326	C-R	473460
19330	C-R	473460
193303H1	HOUGH	416107!
193303H1	HOUGH	455073
19333	C-R	710081
19333	TMTR	470954
19334	LEECE	470712!
1933772	CHRYS	240735
1933789	CHRYS	415991!
1933789	CHRYS	415991
1934676	CHRYS	40494S
1934786	CHRYS	474276!
19349	C-R	473460
19350	C-R	473460*
1935033	CHRYS	476574N
19353	C-R	472394
19359	C-R	472394
19360	C-R	472394
19364	C-R	472394*
19376	C-R	472394*
193794	BENDI	470954!
193796	HYST	415988
19380	C-R	473461!*
1938104	GMC	471526!
19382	ONAN	471224!
1938206	CHRYS	7896S
19383	C-R	472394
19386	C-R	473461!
19387	C-R	473241
19389	C-R	473461!
19392	C-R	471391!
19393	C-R	471391!
19396	C-R	471391!
1939798	GMC	450065
19399	C-R	471391!
194	C-R	5337
19400	C-R	471391
194002	AU-WS	471224!
194004	AU-WS	450593!
194006	AU-WS	471733
194008	AU-WS	472924!
194008	B-L-H	472924!
194010	AU-WS	470530!
194010A	HARWA	19X40X10
194012	AU-WS	473463
194014	AU-WS	415995!
194016	AU-WS	471553!
194018	AU-WS	471554!
19402	C-R	40526S
194020	AU-WS	476838!
194022	AU-WS	471750!
194024	AU-WS	471354!
194026	AU-WS	451948
194028	AU-WS	416738!
194028	AU-WS	450096
194030	AU-WS	472409!
194032	AU-WS	473245!
194034	AU-WS	472636!
194036	AU-WS	412920!
194038	AU-WS	416288!
194040	AU-WS	415034!
194042	AU-WS	416891!
194044	AU-WS	416137
194046	AU-WS	473214!
19405	C-R	473462*
19405	C-R	473462
194050	AU-WS	470950!
194050	AU-WS	6241S
194052	AU-WS	473228
194054	AU-WS	473229
194056	AU-WS	473232
194058	AU-WS	473235!
19406	C-R	473462
19406	C-R	473462*
194060	AU-WS	472185!
194062	AU-WS	474265
194064	AU-WS	470334!
194066	AU-WS	473450
194068	AU-WS	472144!
19407	C-R	473462!
194070	AU-WS	473448
194072	AU-WS	473460
194074	AU-WS	472394
194076	AU-WS	473313
194078	AU-WS	470088
194080	AU-WS	473462
194082	AU-WS	412119!
194084	AU-WS	411245!
194086	AU-WS	415449!
194088	AU-WS	415001!
194090	AU-WS	415458!
194092	AU-WS	417316!
194094	AU-WS	416921!
194096	AU-WS	417492
194098	AU-WS	415991
194098	AU-WS	455146!
194100	AU-WS	416332!
194102	AU-WS	415379
194102	AU-WS	415379!
194104	AU-WS	416339
194104	AU-WS	455031!
194106	AU-WS	415150!
194108	AU-WS	416888!
194110	AU-WS	416892!
194112	AU-WS	417538
194114	AU-WS	417269!
194116	AU-WS	473227
194118	AU-WS	455566
194118	B-L-H	455566
194120	AU-WS	6936S
194124	AU-WS	417488!
194126	AU-WS	415036
194126	B-L-H	415036
194126	CLARK	415036
194128	AU-WS	417537
194128	B-L-H	417537
194130	AU-WS	417551
194134	AU-WS	473467!
194136	AU-WS	416294!
194138	AU-WS	472070
194140	AU-WS	470898!
194140	B-L-H	470898!
194142	AU-WS	418029!
194142	B-L-H	418029!
194144	AU-WS	417621!
194146	AU-WS	415379

! Industrial Size/Type * Minor Width Difference

= The U.S. customer service number is 877-4-TIMKEN. The Canadian customer service numbers are 800-565-4927 (English) and 800-565-0438 (French-Canadian).

Mfr. No.	Name	Zero Duplication or Recommended Industrial
194146	AU-WS	415379!
194148	AU-WS	473016!
194150	AU-WS	473215!
194152	AU-WS	470059
194152	AU-WS	470380!
194156	AU-WS	482253
194158	AU-WS	473234
194160	AU-WS	470334!
194160	AU-WS	50289
194162	AU-WS	410694!
194164	AU-WS	450104
194166	AU-WS	416444
194170	AU-WS	412473!
194170	B-L-H	412473!
194172	AU-WS	417210!
194174	AU-WS	417205!
194176	AU-WS	416107!
194176	AU-WS	455073
194178	AU-WS	415138!
194180	AU-WS	40337S
194182	AU-WS	450033
194184	AU-WS	470712!
194186	AU-WS	411376!
194188	AU-WS	471271!
19419	C-R	40094S
194190	AU-WS	417171!
194192	AU-WS	417181!
194194	AU-WS	40067S=
194196	AU-WS	45187S
1941963	EL-WH	350364
194200	AU-WS	472572!
194202	AU-WS	450089
194202	B-L-H	450089
1942020	CHRYS	331227H
194204	AU-WS	416404!
194206	AU-WS	417344!
194206	B-L-H	417344!
194208	AU-WS	417355!
194210	AU-WS	471424!
194212	AU-WS	472439
194214	AU-WS	473459
194216	AU-WS	415645!
194216	AU-WS	455104
194218	AU-WS	472492!
19422	C-R	473462
19422	C-R	473462*
194220	AU-WS	470354
194222	AU-WS	50528
194224	AU-WS	471267!
194226	AU-WS	472258!
194228	AU-WS	450307
19423	C-R	473462*
19423	C-R	473462
194230	AU-WS	471192
194230	B-L-H	471192
194230	CLARK	471192
1942303	CHRYS	331228H
194232	AU-WS	411394!
194234	AU-WS	417349
194236	AU-WS	450313
194238	AU-WS	473243
194240	AU-WS	473473
1942401	CHRYS	474260
194242	AU-WS	50191
194246	AU-WS	473236!
194248	AU-WS	450133
194250	AU-WS	413247!
194252	AU-WS	470605!
194254	AU-WS	327303!
194256	AU-WS	415991
194256	AU-WS	455146!
194258	AU-WS	415303!
194260	AU-WS	417474
194262	AU-WS	471504!
194262	B-L-H	471504!
194262D	GARLK	5121
194264	AU-WS	416664!
194266	AU-WS	415060
194266	AU-WS	455060
194268	AU-WS	416153!
194270	AU-WS	415938
194270	B-L-H	415938
194270	CLARK	415938
194271MI	MASSE	6668S
194272	AU-WS	415072
194274	AU-WS	471689!
194276	AU-WS	415294!
194278	AU-WS	473225!
19428	C-R	710281
194280	AU-WS	417254
194282	AU-WS	473238
194282UB	TRSCM	200371
194284	AU-WS	415483!
194286	AU-WS	417172
194288	AU-WS	471270!
194290	AU-WS	456105
194292	AU-WS	42352S
194292H1	IH	415995!
194294	AU-WS	415035
194294	AU-WS	415035!
194296	AU-WS	417351!
194298	AU-WS	417546!
194298	B-L-H	417546!
194300	AU-WS	417159
194302	AU-WS	415302
194304	AU-WS	472016
194304	CLARK	472016!
194306	AU-WS	473244
194306	B-L-H	473244
194308	AU-WS	40555
194308	AU-WS	40555S!
194310	AU-WS	55367=
194312	AU-WS	450269
194314	AU-WS	413469!
194316	AU-WS	417487
194318	AU-WS	410825
194320	AU-WS	417538
194322	AU-WS	472164!
194324	AU-WS	473467!
194326	AU-WS	455290
194326	B-L-H	455290
194326	CLARK	455290
194328	AU-WS	472157!
194328	AU-WS	472157
194330	AU-WS	450143
194332	AU-WS	471271!
194334	AU-WS	471689!
194338	AU-WS	416956
194342	AU-WS	6590S
194354	AU-WS	55301S
194358	AU-WS	331107N
194362	AU-WS	476470
194366	AU-WS	455406!
194370	AU-WS	455584
194372	AU-WS	410987!
194374	AU-WS	480210!
194376	AU-WS	470530!
19438	C-R	473461
194380	AU-WS	470625!
194382	AU-WS	415027
194382	AU-WS	415027!
194384	AU-WS	417316!
194386	AU-WS	415725!
194388	AU-WS	7208S
194390	AU-WS	470625!
194392	AU-WS	416476!
194393H1	IH	416888
1944	NATL	494117
194402	AU-WS	417563
194408	AU-WS	476470
194411	AU-WS	417621!
194412	AU-WS	415442!
194413	AU-WS	415074
194414	AU-WS	415146!
194414	AU-WS	415991
194415	AU-WS	415138!
194416	AU-WS	415035!
194417	AU-WS	471271!
194418	AU-WS	470625!
194419	AU-WS	472311!
194420	AU-WS	415437
194421	AU-WS	415027
194422	AU-WS	472185!
194423	AU-WS	471466!
194423H1	HOUGH	416404!
194425	AU-WS	415899N
194425	AU-WS	416624
194426	AU-WS	415085!
194427	AU-WS	240733
194428	AU-WS	240735
194429	AU-WS	417316!
194430	AU-WS	471138!
194431	AU-WS	417343!
194432	AU-WS	417344!
194435	AU-WS	473237!
194436	AU-WS	470954!
19445	C-R	450965
19447	C-R	45653S
19449	C-R	417474
194494MI	MASSE	JV1236=
194495	US-EL	472397!
19450	C-R	417474*
19455	C-R	6074
1946	NATL	224252
19466	C-R	456057
1947	NATL	228020
1947	NATL	80X105X13!
1947581	CHRYS	3095
1949350	CHRYS	7188S
194993	DOMGA	353135
194993	DOMGA	474278!
194993	DOMIN	353135
194993	DOMIN	474278!
1949933	CHRYS	353135
1949933	CHRYS	474278!
194T5	WHITE	472636!
195	BUSHH	204002
19500	C-R	5121
195003A	OLIVE	417487
195019M1	MASSE	450446
195020M1	MASSE	418028
195020M1	MASSE	455137!
195021M1	MASSE	471785!
195022M1	MASSE	470774!
195051A	OLIVE	203025
1950540	C-R	50975=
19510	C-R	200371
195211M1	MASSE	455079!
195218M1	MASSE	415150!
195226M1	MASSE	413247!
195245M1	MASSE	473215!
195255M1	MASSE	455008
195271M1	MASSE	6668S
195287M1	MASSE	480630!
195291M1	MASSE	471224!
1953	WMG	1953
195321M1	MASSE	240735
19534	EATON	473238
19535	EATON	410737!
19536	EATON	411253!
195367M1	MASSE	46997S
19537	EATON	416654!
1954	NATL	224820
195452M1	MASSE	472354!
195458M1	MASSE	50528
195459M1	MASSE	473010
195474M1	MASSE	472492!
195501M1	MASSE	472560N!
195501M1	PERKI	712140
195506M1	MASSE	470334!
195523M1	MASSE	450604
195536	CLARK	470954!
195555M1	MASSE	472924!
195557M1	MASSE	410987=
195557M1	TRU-P	410987=
195677M1	MASSE	415984!
195678M1	MASSE	470898
195678M2	MASSE	470898
195757M1	MASSE	473461!
195758M1	MASSE	473236!
195759M1	MASSE	473214
195760M1	MASSE	472258
195761M1	MASSE	473423
195763M1	MASSE	471829
19577A	C-R	470059
19577A	C-R	470380
195786H1	IH	415137!
195786H1	IH	418028
195870M1	MASSE	472560N!
19588F	OSHKO	415138!
195925M91	MASSE	471413
1959331	GM	420
19599	C-R	710192
196	C-R	5095
1960	C-R	5X16X5*
19600	C-R	1209
19600	C-R	225010
19600	C-R	50X65X8!
19601	C-R	1209
196011	SPERY	471272!
19602	C-R	225005
19602	C-R	50X62X7!
19603	C-R	225005
196035M1	MASSE	471760
19604	C-R	710098
19605	C-R	225010
19605	C-R	50X65X8!
19606	C-R	1209
19606	C-R	50X65X8V!
196069	HYST	411245!
19607	C-R	473814
196071	HYST	418028
196072	HYST	J1122
196073	HYST	J1114=
19608	C-R	1948
19608	C-R	50X68X8!
19609	C-R	7751H
1961	NATL	222242
19610	C-R	7751H
1961007	LILIS	470380!
19611	C-R	225020
19611	C-R	50X68X8V!
19613	C-R	710194
19614	C-R	50X68X8V!
19615	C-R	450472!
19616	C-R	1948
19617	C-R	450655=
19618	C-R	1948*

! Industrial Size/Type * Minor Width Difference

= The U.S. customer service number is 877-4-TIMKEN. The Canadian customer service numbers are 800-565-4927 (English) and 800-565-0438 (French-Canadian).

Mfr. No.	Name	Zero Duplication or Recommended Industrial
19618	C-R	50X68X8!*
19619	C-R	1948*
19619	C-R	50X68X8!*
19620	C-R	**450911N**!
19621	C-R	710194
19622	C-R	225005
19623	C-R	710529
19624	C-R	1974
19626	C-R	1974
19627	C-R	1974
196272SA	TRSCM	**450911N**
19628	C-R	1974
19628	C-R	710357
196286	SPERY	**473313**!
196297	ALLCH	256616=
196298	ALLCH	**415142**
1962984	ALLCH	**415142**
19630	C-R	1960
19630	C-R	50X70X8!
19630	C-R	50X70X9!*
19631	C-R	50X70X10V
19632	C-R	50X70X8!*
19632	C-R	50X70X9!
19632	C-R	710173
19634	C-R	50X70X10V!*
19635	C-R	710173
19636	C-R	50X72X8V!
19638	C-R	225030
19638	C-R	50X72X8!
1963807C1	CASE	**471264**!
1963843C1	CASE	**472705**!
19639	C-R	225035
19640	C-R	225030
19640	C-R	225035*
19640	C-R	50X72X8!
19641	C-R	225035
19641	C-R	225040*
19641	C-R	50X72X8V!
19643	C-R	**450474***
19643	C-R	5695
19644	C-R	5695
19645	C-R	225035
19645	C-R	50X72X8!*
196452C1	IH	**412943**
19646	C-R	225035*
19646	C-R	50X72X8!
196465H1	HOUGH	**415023**
196465H1	IH	**415023**
19649	C-R	225035
19649	C-R	50X72X8!*
196495	ALLCH	**416339**
196496	ALLCH	**415867**
19652	C-R	225040
19653	C-R	41081S=
19654	C-R	50X75X10!
19654	C-R	50X75X12!*
19654	C-R	50X75X8!
19655	C-R	50X75X7
19656	C-R	710137
19660	C-R	40370S
19661	C-R	50X78X8
19662	C-R	225050
19662	C-R	50X80X8!
19663	C-R	225050*
19663	C-R	50X80X8!*
19664	C-R	50X80X8
19665	C-R	225050
19665	C-R	50X80X8!
19666	C-R	50X80X8V
19668	C-R	225082
19670	C-R	50528
19671	C-R	50528
19672	C-R	710112
19674	C-R	50X85X10
19675	C-R	50X85X8
19677	C-R	225082
19679	C-R	50X88X8
1968	NATL	1174
19680	C-R	450111
19682	GEM	240319
19684	C-R	50X90X8
19686	C-R	50X90X10V
19687	C-R	710117
19689	C-R	710071
19690	C-R	450497=
196927	SPERY	**415867**
19698	C-R	476512
1970	SPG	30X42X7
19702D	IH	50075=
19707D	IH	**471570**!
19709	C-R	1941
197116	C-R	**474276**
19712	C-R	**450342**
19714	C-R	**471747**!
19714M1	C-R	**471747**!
19715	C-R	473428
19716	C-R	**473426**
19718	C-R	**471750**
19718M1	C-R	**471750**
19719	C-R	470050
19720	C-R	200885
19730	C-R	4189H
1973110	OSHKO	370003A
19739	C-R	452261H
19743	C-R	4148
19745	C-R	**352541**
19746	C-R	40410S
19747	C-R	4148
19748	C-R	40401
19750	C-R	**352541**
19750	FMC	470059
19750	FMC	**470380**!
19753	C-R	4739
19753	C-R	8871
19754	C-R	40401
19756	C-R	50514
19757	C-R	9015S*
19758	C-R	**471424**!
19759	C-R	**471424**!
1976	NATL	223542
1976	NATL	35X55X11!
19760	C-R	**471424**!
19761	C-R	9015S
19761D	IH	**415458**
19762	C-R	**471424**
19763	C-R	4148
19766	C-R	8871
19767	C-R	40410S
19768	C-R	9406S
19770	C-R	292594
197705A	OLIVE	**450400**
19773	C-R	3794
19775	C-R	**471870**!
197752	SPERY	**417349**
19776	C-R	4148
19777	C-R	**471424**!
19778	C-R	**471870**!
19779	C-R	**471870**!
1978	WMG	224270
19780	C-R	**471870**!
19781	C-R	40360S!
19783	C-R	40360S!
19784	C-R	4739
19785	C-R	**474272**!
19785	C-R	**474272***
19786	C-R	**474272***
19786	C-R	**474272**
19787	C-R	**471870**!
19788	C-R	43073S
19789	C-R	**474272**
19793	C-R	710365
19797	LEECE	**470712**!
197974H1	HOUGH	**415458**!
1979784	GM	421
19799	C-R	3404
198	C-R	5068
1980	NATL	3771
19803	C-R	5113
19804	C-R	5113
19804	C-R	7721
19805	C-R	**474272**
19806	C-R	**472492**!
19807	C-R	**331107N**
19808	C-R	**472572**!
1981	VIC	222430
19810	C-R	**472492**!
198116	ALLCH	**474276**!
198116	C-R	**474276**
19812	C-R	**450342**
19812D	IH	**471554**!
19814	C-R	**471747**!
19814M1	C-R	**471747**!
19815	C-R	473428*
19816	C-R	**473426***
19817D	IH	**471554**!
19818	C-R	**471750**
19818K	SUL	**471750**!
19818M1	C-R	**471750**
19819	C-R	470050*
19819	FAIRB	470050
1982	NATL	3771
1982	WMG	3771
19820	C-R	5865
19821	C-R	**331107N**
19822	C-R	**472492**!
19823A	C-R	**470606**
19824	C-R	**472492**!
19824A	C-R	**415483**!
19825	C-R	**472492**!
19827	C-R	**472492**!
19829	C-R	**472492**!
198291	HYST	**417349**!
1983	NATL	225230
1983	NATL	52X72X8!
19830	C-R	8804S=
19831	C-R	**472492**!
19832	C-R	**472492**!
19834	C-R	40389S
19835	C-R	**472492**!
19836	C-R	**472492**!
19837	C-R	**472492**!
19838	C-R	**472492**!
19839	C-R	3404
19839	C-R	**472492**
19844	C-R	200881
198477	ALLCH	**416282**
19848	C-R	**472653**!
19851	C-R	493524
19852	C-R	331301N
19853	C-R	**472924**!*
19854	C-R	**472924**!*
19855	C-R	**472924**!*
19856	C-R	**472924**!*
19857	C-R	**472924**!*
198578	ALLCH	**415234**!
19857D	IH	**450048**
19860	C-R	**472924**!*
19864	C-R	**472924***
19868	C-R	**472924**!*
19872	C-R	**472924**!
19873	C-R	**472924**!
198742H1	IH	**415447**
19876	C-R	**472924**
1988	NATL	227410
19880	C-R	200339
19880	C-R	**472924**!
19881	CLAYN	**416404**!
19882	C-R	8998
19884	C-R	320259
19886	C-R	**472924**!
19887	C-R	320259
19887	C-R	**472924**!
19888	C-R	48X88X8
19890	C-R	**472924**!
198908	ALLCH	**415725**!
19891	C-R	**472924**!
198921	US-EL	**471138**!
19893	C-R	8998
19895	C-R	**472924**!
19896	C-R	**472924**!
19898	C-R	**472924**
19898	C-R	**472924**=
19899	C-R	**472924**!
1989977	GMC	425RR
198W118M1	C-R	**471750**
198W14	C-R	**471747**!
198W14-M1	C-R	**471747**!
198W18	C-R	**471750**
198W18M1	C-R	**471750**
199	C-R	5092
19900	C-R	**472924***
19900	C-R	**472924**=
19901	C-R	**472924**!
19902	C-R	**472924**!
19904	C-R	**472924**!
199044H1	HOUGH	**476470**!
199044H1	HOUGH	**476470**
19905	C-R	710263
19906	C-R	**472924**!*
199072	JEFF	**471192**
1991	C-R	**471760***
1991	NATL	1953
1991	NATL	42X60X7!
199112	C-R	**472258***
199114	JEFF	**417357**
199114	JEFF	455192!
199123R91	IH	456618
199124R91	IH	**415351**!
19913	C-R	450159*
19914	C-R	**472082***
19915	C-R	**472082**
19917	C-R	**472082**
19918	C-R	**471766**!
19918M1	C-R	**471766**!
19922	C-R	**472082**
19923	C-R	**472082**=
19928	C-R	470645*
199294H1	HOUGH	**473010**!
1992M	BRAD	**471553**!
199303	US-EL	**471255**!
19932	C-R	**470530**!
19933	KINGN	**473205**
199334	WAUKE	**416865**!
19935	C-R	205044
19938	C-R	205044
19939	C-R	4598
19940	C-R	205044*
199417	B-L-H	**471271**!

! Industrial Size/Type * Minor Width Difference

= The U.S. customer service number is 877-4-TIMKEN. The Canadian customer service numbers are 800-565-4927 (English) and 800-565-0438 (French-Canadian).

Mfr. No.	Name	Zero Duplication or Recommended Industrial
19942	C-R	470530!
19944	C-R	470530!
199451	WAUKE	J1137=
199451A	WAUKE	J1107
199451C	WAUKE	J1115
19948	C-R	470530!
19949	C-R	470530!
19951	C-R	470530!
19953	C-R	470530!
19957	C-R	470530!
19960	C-R	470530!
19965	C-R	40085S
199653R91	IH	471195!
19968	C-R	470530!
19969	C-R	470530!
19969	C-R	470530*
1997	NATL	1012
1997	NATL	1012N
1997	NATL	45X62X8!
19970	C-R	470530!
19970	C-R	470530*
19970	WHITE	50560
199717R91	IH	472299
19975	C-R	470530!
19976	C-R	470530!
19977	C-R	470530*
19977	C-R	470530!
19978	C-R	40085S
19979	C-R	470530=
1998	NATL	222510
19980	C-R	470530!
19980D	IH	412861
19981	C-R	470530
19982	C-R	470530*
19983	C-R	470530
199835	FWD	HU009A
199836	FWD	730003
19985	C-R	470530
19986	C-R	470530
19988	C-R	470530
199881	FWD	HU024A
199882	FWD	730004
199884	FWD	HU028A
199885	FWD	730001
199899	FWD	730016
19990	C-R	40301S
199902	FWD	HU066A
19991	C-R	472397
19992	C-R	472397!
19993	C-R	472397!
19994	C-R	472397
19998	C-R	472397!
19999	C-R	472397!*
19DKB-0214	WHITE	415960
19DT633	OSHKO	415379
19FK0431	WHITE	415449!
19QJ-122	MACK	HU036A
19QJ-123	MACK	HU110A
19QJ-238	MACK	HU036A
19QJ-245	MACK	HU031A
19QJA-29302	MACK	HU024A
19QJA-29304	MACK	HU009A
19QJA-29305	MACK	HU009A
19QJA-29306	MACK	HU036A
19QJA-29307	MACK	HU009A
19QJA-29308	MACK	HU009A
19QJA-29309	MACK	HU024A
19QJA-310	MACK	HU036A
19QJA-310-P1	MACK	HU036A
19QJA-311	MACK	HU031A
19QJA-312	MACK	HU149A
19QJA-313	MACK	HU009A
19QJA-314	MACK	HU058A
19QJA-315	MACK	HU057A
19QJA-316	MACK	HU012A
19QJA-317	MACK	HU024A
19QJA-318	MACK	HU009A
19QJA-319	MACK	HU009A
19QJA-320	MACK	HU149A
19QJA-325	MACK	HU036A
19QJA-39301	MACK	HU036A
19SKB-0214	WHITE	472164!
19SKB-024	WHITE	472164!
19UG-0214	WHITE	473227!
19UG-024	WHITE	473227!
19UG-0431	WHITE	411253!
19X27X6SC	TRSCM	19X27X6
19X27X6TC	TRSCM	19X27X6
19X30X7ASN	ISP	19X30X7
19X32X7	SIMRT	19X32X8
19X32X7AN(35)	ISP	19X32X7
19X32X8SC	TRSCM	19X32X8
19X32X8TC	TRSCM	19X32X8
19X35X10	NATL	45031S
19X35X10SC	TRSCM	19X35X10!
19X35X10TC	TRSCM	19X35X10!
19X40X10	SIMRT	19X40X10
19X40X10SC	TRSCM	19X40X10
19X40X10TC	TRSCM	19X40X10
1A122	NOVO	471466!
1A3253	LEYLD	472258!
1A3472	FED	470334!
1A3473	FED	471750!
1A3480	FED	473215!
1A3737	FED	470530!
1A4194	FED	45637S
1A4256	FED	481568!
1A4664	FED	473179
1A5543	FED	473367!
1A5543	FED	473367
1A6032	FED	330385
1A6054	FED	417344!
1A7214	FED	471689!
1A7222	FED	473228
1A7372	FED	471192
1A78062	FWD	473227
1A78062	WAUKE	473227
1AA9424	WHITE	473228
1AD9424	WHITE	473367
1AD9424	WHITE	473367!
1AG9424	SPICE	472179
1AG9424	WHITE	472179
1AK9424	WHITE	472572!
1AN9424	WHITE	472924!
1AR9424	WHITE	472015!
1AU9424	WHITE	411253!
1AV9424	WHITE	472636!
1AX9425	WHITE	416271!
1B1057	CATER	411253!
1B1064	CATER	415960!
1B1065	CATER	415023
1B1069	CATER	450593!
1B1072	CATER	473419
1B1443	OLIVE	455434
1B1477	FED	412119!
1B1785	CATER	415034!
1B2245	CATER	470334!
1B2256	CATER	413469!
1B2257	CATER	473444
1B2257	CATER	473444!
1B2258	CATER	473367!
1B2258	CATER	473367
1B2346	CATER	470059
1B2346	CATER	470380!
1B2418	CATER	472924!
1B2418	WESTR	472924!
1B2477	CATER	416125!
1B2729	CATER	470530!
1B287337316	GACO	239129
1B4868	CATER	415025
1B5990	CATER	470088
1B5997	CATER	471354!
1B6029	CATER	474265
1B6256	LEYLD	471224!
1B6574	FED	470354
1B7308	FED	471466!
1B7493	NAPCO	412119!
1B8212	CATER	50026
1B936	CATER	415001!
1B9919	CATER	471466!
1B9919	WESTR	471549!
1BA9424	WHITE	415449!
1BA9425	WHITE	415960
1BB9425	WHITE	415449!
1BG9424	WHITE	417316!
1BH9425	WHITE	415960
1BJ9424	WHITE	415960!
1BJ9425	WHITE	417344!
1BK9424	WHITE	416404!
1BK9425	WHITE	417344!
1BN9424	WHITE	417487
1BR9424	WHITE	417621!
1BR9425	WHITE	417171!
1BS9424	SPICE	417171!
1BS9424	WHITE	417171!
1BV9424	WHITE	417181!
1BW9424	WHITE	415023
1C108	NOVO	450593!
1CA60536	FWD	473229
1CAA9424	WHITE	415302
1CD9424	WHITE	417501
1CG9424	WHITE	416339
1CG9424	WHITE	455031!
1CR9424	WHITE	412943
1CS1918	FWD	471466!
1CS2049	FWD	470334!
1CU9424	WHITE	411245!
1CX9424	WHITE	415138!
1D1443A	OLIVE	416292
1D3561	LEYLD	472164!
1D4321	CATER	412943
1D4324	CATER	412943
1D4326	CATER	415988
1D4327	CATER	416921!
1D4901	CATER	412119!
1D5567	CATER	471554!
1D5568	CATER	471750!
1D5973	CATER	450065
1DA9424	WHITE	416167!
1DD9424	WHITE	471765!
1DE9424	WHITE	471354!
1DG9424	WHITE	472144!
1DK9424	WHITE	455336
1DN9424	WHITE	473225!
1E0011	CATER	416113V
1E1039	CATER	416113V
1E104	DIA	46997S
1E105	DIA	472144!
1E1087	OLIVE	473214!
1E1110	OLIVE	410987!
1E1443	OLIVE	471138!
1E1569	OLIVE	412871!
1E1582	OLIVE	470565!
1E1588	OLIVE	451817
1E1590	OLIVE	471267!
1E174	DIA	472179
1E2006	CATER	416113V
1E267	ALLCH	455008
1E3377	OLIVE	472492!
1E3512	OLIVE	240009
1E575	OLIVE	240731
1E620	OLIVE	472299
1E693	OLIVE	473239
1E930	OLIVE	471224!
1EX14398	ALLCH	416888
1EX22579	ALLCH	417191
1EX22580	ALLCH	J1123
1EX24199	ALLCH	471760
1EX26327	ALLCH	472492!
1F0636	CATER	416107!
1F0636	CATER	455073
1F100175	UNIVE	471689!
1F11113	MURRA	410987!
1F5477	CATER	471442!
1F5478	CATER	471255!
1F5479	CATER	471554!
1F5480	CATER	471570!
1F5482	CATER	476838!
1F5482	CATER	476838*
1F5483	CATER	472287!
1F5484	CATER	474281!
1F5485	CATER	415458!
1F5514	CATER	40059S
1F5692	CATER	472705!
1F636	CATER	416107!
1F636	CATER	455073
1F7891	CATER	471649!
1F880	CATER	416865!
1G9424	WHITE	471554!
1H1036	CATER	341022
1H1110	OLIVE	472636!
1H2265	CATER	471504!
1H2439	CATER	415995!
1H275	OLIVE	50199S!
1H275	OLIVE	6863S!
1H3339	LEYLD	1097N
1H4439	CATER	240356
1H4663	CATER	470565!
1H5959	CATER	473016!
1H5959	WESTR	473016!
1H790	CATER	415035
1H8371	CATER	471192
1J2150	CATER	415991
1J2150	CATER	455146!
1J2258	CATER	416666
1J2381	CATER	471281!
1J2382	CATER	470712!
1J3540	CATER	710010
1J4034	CATER	415027!
1J4220	CATER	415295
1J4240	CATER	415295
1J4587	CATER	471554
1J7063	CATER	415138!
1J8388	CATER	472016
1JG7	KEN	415960
1K1110	OLIVE	471766!
1K1443	OLIVE	416921!
1K1582	OLIVE	323138!
1K1588	OLIVE	410496!
1K1590	OLIVE	471192
1K2053	OLIVE	472354!
1K2212	OLIVE	340413
1K2262	OLIVE	411
1K4713	CATER	413478
1K620	OLIVE	472439
1K693	OLIVE	455079!
1K6981	CATER	710017
1K6982	CATER	710018

! Industrial Size/Type * Minor Width Difference

= The U.S. customer service number is 877-4-TIMKEN. The Canadian customer service numbers are 800-565-4927 (English) and 800-565-0438 (French-Canadian).

Mfr. No.	Name	Zero Duplication or Recommended Industrial
1K6983	CATER	450307
1K73186	MURRA	416664!
1K752A	OLIVE	471571
1K7983	CATER	472924!
1K9424	SPICE	471570!
1K9424	WHITE	471570!
1L1110	OLIVE	416271!
1L1443	OLIVE	472016
1L2094	CATER	473197
1L2P-7052BA	FORD	4765
1L2Z-7052BA	FORD	4765
1L2Z-7B215EA	FORD	710403
1L3W4674AA	FORD	4278
1L4776	CATER	470625!
1L4777	CATER	471344
1L620	OLIVE	473234
1L620B	OLIVE	471692!
1L693	OLIVE	412943
1L7204	CATER	417487
1L7204	CATER	417487!
1L7560	CATER	415725=
1L9349	CATER	416229
1M1110	OLIVE	415458!
1M1460	HU-WR	471504!
1M3003	CATER	417350=
1M7657	FORD	410059
1M7657	FORD	470380!
1M77334	FORD	473459
1N9349	CATER	471785=
1N9424	WHITE	450593!
1P4879	CATER	710009
1P5387	CATER	455079!
1P7657	FORD	7692S
1P7657A	FORD	410059
1P7657A	FORD	470380!
1P7657A3	FORD	410059
1P7657A3	FORD	470380!
1P77265R	FORD	408
1P77288A	FORD	240816
1P77288B	FORD	7929S
1P77837	FORD	473459
1P77837A	FORD	473459
1P77837B	FORD	473459
1P77837B3	FORD	473459
1P77837B4	FORD	473459
1PS396	C-P	473225!
1QFL330	MACK	370019A
1R9424	WHITE	476838!
1S1115	CATER	473235!
1S1164	CATER	3893V!
1S1164	CATER	415379!
1S1369	CATER	456462
1S2234	CATER	456464
1S5347	CATER	2792
1S6543	CATER	410825
1S79	CATER	415031N=
1S8814	CATER	415899N
1S8814	CATER	416624
1SK9424	WHITE	472572!
1SPC22	NOVO	471255!
1T0467	CATER	415035
1T1366	CATER	415995!
1T467	CATER	415035
1T9424	WHITE	470712!
1U319	ULRIC	450400
1W5729	CATER	J1984*=
1W6974	CATER	39894
1W6977	CATER	39893
1WB7	OSHKO	416071
1X1137	FMC	415991
1X1137	FMC	455146!
1X1137	LK-BT	415991
1X1137	LK-BT	455146!
1X1138	FMC	416888!
1X1138	LK-BT	416888!
1X1461	FMC	417238
1X1461	LK-BT	417238
1X1484	FMC	455117
1X1501	FMC	415187
1X1666	FMC	455584
1X1666	LK-BT	455584
1X1743	FMC	415294!
1X1743	LK-BT	415294!
1X1841	FMC	415379
1X1841	FMC	415379!
1X1841	LK-BT	415379
1X1841	LK-BT	415379!
1X1843	FMC	470898!
1X1843	LK-BT	470898!
1X1861	FMC	417495
1X1861	LK-BT	417495
1X1865	LK-BT	415449!
1X1990	FMC	417357
1X2066	FMC	415138!
1X2098	FMC	417171!
1X2312	FMC	455178=
1X2312	LK-BT	455178=
1X2354	FMC	417298
1X2354	LK-BT	417298
1X2412	FMC	415389
1X2446	FMC	415035
1X2446	FMC	415035!
1X2446	LK-BT	415035
1X2446	LK-BT	415035!
1X25215	IH	416865!
1X2527	FMC	481537
1X2527	LK-BT	481537
1X2570	FMC	412920!
1X2570	LK-BT	412920!
1X2571	LK-BT	473214
1X2578	FMC	472016
1X2578	LK-BT	472016
1X2666	FMC	417262!
1X2666	LK-BT	417262!
1X2671	FMC	417357
1X2671	FMC	455192!
1X2671	LK-BT	417357
1X2671	LK-BT	455192!
1X2738	LK-BT	415995!
1X2833	LK-BT	415187
1X2834	LK-BT	415066
1X2943	LK-BT	417551
1X2944	FMC	J1138
1X2944	LK-BT	J1138
1X2956	FMC	J1136
1X2956	LK-BT	J1136
1X2967	FMC	415074
1X3193	FMC	J1128
1X3193	LK-BT	J1128
1X3230	FMC	417255
1X3230	LK-BT	417255
1X3231	LK-BT	J1278=
1X3235	FMC	417357
1X3235	LK-BT	417357
1X3235	LK-BT	455192!
1X3236	FMC	417551
1X3236	LK-BT	417551
1X3295	FMC	417556
1X3327	FMC	J1124
1X3329	FMC	J1125
1X3330	FMC	J1118
1X3330	LK-BT	J1118
1X3337	FMC	417433
1X3337	LK-BT	417433
1X3338	FMC	417541
1X3338	LK-BT	417541
1X3345	FMC	417512
1X3353	FMC	J1122
1X3353	LK-BT	J1122
1X3360	LETN	415449!
1X3363	FMC	473228
1X3385	FMC	J1120=
1X3389	FMC	416239!
1X3422	FMC	416865!
1X3423	FMC	455330!
1X3424	FMC	J1141
1X3446	FMC	415072
1X3461	FMC	417600
1X3541	FMC	415379
1X3541	FMC	415379!
1X3554	FMC	J1134
1X3589	FMC	417191
1X3589	FMC	455165!
1X3591	FMC	J1123
1X3686	FMC	416892!
1X3693	FMC	416865!
1X3810	FMC	455191
1X3820	FMC	416476!
1X3966	FMC	J1131
1X3967	FMC	415074
1X4027	FMC	455396
1X4280	FMC	415128
1X4395	FMC	J1127
1X4396	FMC	415697!
1X4396	FMC	455547
1X4411	FMC	417546!
1X4427	FMC	416154!
1X4429	FMC	J1126
1X4461	FMC	416339
1X4556	FMC	J1140
1X4889	FMC	417600
1X4W7H426AA	FORD	100731V
1X5446	FMC	415449!
1X5448	FMC	416892!
1X5475X	FMC	416865!
1X5589	FMC	417551
1X5603	FMC	481537
1X5695	FMC	415551
1X5696	FMC	JX1190
1X5703	FMC	416229
1X5703P	FMC	416229
1X5718X	FMC	417571
1X5785	FMC	470898
1X5832P	FMC	417364
1X5872P	FMC	415371
1X5924P	FMC	415150!
1X6876	FMC	472636*=
1X6878	FMC	417191*=
1X6880	FMC	471271*
1X9424	WHITE	471192
1Z6407	CATER	447060V=
2-68630058	OWS	340817
2-68630481	OWS	415379
2-68630515	OWS	415035
2-68630515	OWS	415035!
2-A6475	BENDI	417316!
2-C211	HWY	417556
2-J227	NOVO	473419
2-JG10	KEN	410102
2-JG13	KEN	473231
2-JG14	KEN	50560
2-JG15	KEN	410496!
2-JG16	KEN	370036A
2-JG17	KEN	415137!
2-JG17	KEN	418028
2-JG2	KEN	5401
2-JG21	KEN	412119
2-JG22	KEN	470530!
2-JG23	KEN	472179
2-JG24	KEN	6270
2-JG26	KEN	6489
2-JG27	KEN	6635S
2-JG28	KEN	415138!
2-JG3	KEN	5403
2-JG30	KEN	417262!
2-JG31	KEN	6872S
2-JG32	KEN	417254
2-JG33	KEN	417349
2-JG34	KEN	416500
2-JG37	KEN	472636!
2-JG38	KEN	416282
2-JG4	KEN	5405
2-JG5	KEN	5406
2-JG7	KEN	5408
2-JG9	KEN	50631
2-SPC22	NOVO	471763
2/5-F990	ROCKW	472016
20-P68	MINNM	204002
200	ROCKW	5401
200	UNIVE	472397!
20000-0600	GARLK	6X16X7
20000-0905	GARLK	9X22X7
20000-1409	GARLK	14X30X7
20000-1902	GARLK	19X32X8
20000-1903	GARLK	19X32X8
20000-2021	GARLK	20X37X8
20000-2702	GARLK	27X42X10
20000-3402	GARLK	34X52X8
20000-3403	GARLK	34X52X8
20000-3404	GARLK	34X52X8
20000-3405	GARLK	34X62X10!
20000-3601	GARLK	36X52X7
20000-3604	GARLK	36X62X7!
20000-4034	GARLK	40X68X12
20000-4403	GARLK	44X65X10!
20000-4533	GARLK	45X85X10
20000-4534	GARLK	45X85X10
20000-5020	GARLK	50X75X10
20000-5205	GARLK	52X80X10
20000-5300	GARLK	53X68X10
20000-5301	GARLK	53X68X10
20000-5611	GARLK	56X80X8
20000-6306	GARLK	63X85X10
20000-6308	GARLK	63X85X10
20000-6404	GARLK	64X90X13
20000-6405	GARLK	64X90X13
20000-7500	GARLK	75X90X10
20000-7505	GARLK	75X110X12
20000-9200	GARLK	92X120X13
200000A	CASE	455189
200000A	HERCU	455189
200000B	HERCU	455189
200002	SPG	200110
200002206	GARLK	22X37X7!
200002206	GARLK	22X37X8!
200005793	WHITE	417254
200006561	WHITE	410930=
20001-0303	GARLK	135X160X12
20001-0407	GARLK	145X180X12
20001-0900	GARLK	190X230X13
20003	C-R	40301S
20003	LEECE	416738!
20003	LEECE	450096
200032	CLARK	471224
200038	CUMMI	471267
200039	CUMMI	471272
20004	C-R	472397!
20004	C-R	472397*

! Industrial Size/Type * Minor Width Difference

= The U.S. customer service number is 877-4-TIMKEN. The Canadian customer service numbers are 800-565-4927 (English) and 800-565-0438 (French-Canadian).

Mfr. No.	Name	Zero Duplication or Recommended Industrial
20004	*LEECE*	**473225**!
20005	*C-R*	**472397**!
20005	*LEECE*	40085S
20005606	*TROS*	470645
20006	*C-R*	40301S
200069	*CUMMI*	J1111
20009	*C-R*	**472397**
2000M-13	*ROCKW*	5408
2001	*C-R*	**471760**
2001	*SEAMA*	**473473**
20010004	*TROS*	**471760**
20010007	*TROS*	**471760**
20010805	*TROS*	**471763**
20010807	*TROS*	**471763**
200111	*KOHL*	**471760**
200112	*C-R*	**472258***
200112	*KOHL*	**471224**!
20011204	*TROS*	**471765**
20011207	*TROS*	**471765**!
20011604	*TROS*	**471766**!
20011604.75	*TROS*	**471766**
20011605	*TROS*	**471766**!
20011606	*TROS*	**471766**!
20011607	*TROS*	**471766**!
20011608	*TROS*	**471766**!
20011610	*TROS*	**471766**!
200117	*HYST*	311197
20012	*C-R*	**471762**!
20012	*C-R*	710437
20012	*GOODM*	**471762**!
20012005	*TROS*	**473210**
20012005C	*TROS*	**473210**
20012006	*TROS*	**473210**
20012405	*TROS*	**472258**!
20012405.25	*TROS*	**472258**!
20012405.5	*TROS*	**472258**
20012406	*TROS*	**472258**!
20012407	*TROS*	**472258**!
200129	*WILYS*	**416738**!
200129	*WILYS*	450096
20012K	*GOODM*	**471762**!
20012M1	*C-R*	**471762**!
20013	*C-R*	450159
20013203.5	*TROS*	240319
20013204	*TROS*	**481163**!
200133	*CLARK*	**471224**!
20013LPD	*JN-MN*	**415043**
20014	*C-R*	**471763**
20015	*C-R*	**471764**!
200155M1	*MASSE*	**472924**!
20015M1	*C-R*	**471764**!
20016	*C-R*	**471765**
200164M1	*MASSE*	**473238**!
200166M1	*MASSE*	**471750**!
20016M1	*C-R*	**471765**
20017	*C-R*	**450173**
20018	*ALLCH*	**471766**!
20018	*C-R*	**471766**!
20018	*FAIRB*	**471766**!
20018	*MINMA*	**471766**!
20018	*SPG*	**471264**!
20018M1	*C-R*	**471766**!
20018Q6-B	*C-R*	**471766**!
20019	*C-R*	**473424**!*
200196	*ALLCH*	**473367**!
200196	*ALLCH*	**473367**
200204BX	*SPG*	200204=
20022	*C-R*	**472397**!
2002245	*GMC*	**473243**
20023	*C-R*	**472397**!
200234T	*BR-WN*	**417344**!
200236	*EATON*	**416444**
200256	*EATON*	8611N
200275	*MICH*	**472492**!
20028	*C-R*	**472397**!
200283	*EATON*	8660S
200287	*MICH*	**472924**!
200287	*UNIVE*	**472924**!
200287DSL	*MICH*	**472924**!
200294	*EATON*	**471272**!
200299	*UNIVE*	**470530**!
2003	*FMS*	2003N
200300	*MICH*	**470530**!
200300	*UNIVE*	**472397**!
200300HSL	*MICH*	**470530**!
200300ISL	*MICH*	**470530**!
200300LSL	*MICH*	**470530**!
200301	*MICH*	**472397**!
200303SA	*TRSCM*	**472397**
200306	*MICH*	**473463***
200306	*UNIVE*	**473463**
200307	*CUMMI*	39835
200307	*CUMMI*	5133!
2003119	*GMC*	**473454**
200312	*UNIVE*	**473242**
200313	*MICH*	**473242**
200318	*UNIVE*	**473464**
200318	*UNIVE*	**473464**!
200319	*MICH*	**473464**!
200319	*MICH*	**473464**
200325	*UNIVE*	**412027**
20032LUP	*JN-MN*	**416125**!
200334M1	*MASSE*	**417316**!
200337	*MICH*	**410102**
200340B	*HERCU*	45637S
200340B	*HOUGH*	45637S
200348	*HARRI*	**480630**!
20035	*FMC*	**410102**
200354	*SPG*	200354
2003712	*GMC*	**416167**!
2003754	*GWI*	450398
2003754	*GWI*	**471267**!
200378	*WILYS*	42763
200382	*HERCU*	**470712**
200382A	*HERCU*	**470712**
200384	*CONTI*	5971
2003RC	*SUL*	**416888**!
20040	*C-R*	**473463**
200420	*WILYS*	5778
200427	*CONTI*	5971
20043	*C-R*	**473463**
20043	*SIDEW*	**470380**!
20044	*C-R*	204508!
20044	*C-R*	**473463**
200446	*HYST*	**410825**
200447	*HYST*	**415960**
20045	*C-R*	**473463**
20046	*C-R*	**473463**
2004657	*GMC*	455244H=
20047	*C-R*	**473463***
20048	*C-R*	**473463**
20049	*C-R*	**473463**
200490	*HYST*	**415854**
20050	*SPICE*	370036A
20050	*SPICE*	370349A
20050	*SPICE*	380036A
20051	*C-R*	**473463**
20051258	*DURA*	**471763**
20052	*C-R*	**473463**
20053	*C-R*	**473463**
200539	*HARRI*	**473197**
20054	*C-R*	**473463**
200544	*HARRI*	417502
20055	*SPG*	**473215**!
20059	*C-R*	**473463**
20059	*SPG*	**470380**!
200598	*KOHL*	**481537**
20060	*GARLK*	**471442**!
20060024	*DURA*	**473236**!
200600BPO	*SPG*	200600
2006082	*GMC*	**415991**
2006082	*GMC*	455146!
2006216	*EATON*	**415960**!
20063	*C-R*	**473463**
200640BX	*SPG*	200640
20065	*C-R*	7721!
2006512	*GMC*	370034A
2006522	*EATON*	**415938**
2006523	*GMC*	3143N*
20067	*SPG*	**473228**!
20068	*C-R*	**473242**
20069	*C-R*	**473242**
2007	*FMS*	2007N
20070	*C-R*	**473242**
20071	*C-R*	**473242**
20072	*C-R*	**473242**
20072	*GARLK*	**471526**!
200721H1	*IH*	**472636**
20074	*C-R*	**473242**
20075	*C-R*	**473242**
200757H1	*IH*	**473010**
20076	*C-R*	**473242**
20076S	*SPG*	**470334**!
20078	*C-R*	**412725**
20078	*C-R*	43670!
20079	*C-R*	**412725**
2008	*NATL*	32X54X10
20081	*GARLK*	**471472**!
20082	*C-R*	**412725**
20083	*C-R*	**412725**
20085S	*SPG*	**470530**!
2008723	*GMC*	370001A
200897SSL	*MICH*	**472924**
200897X	*SPG*	80313
20090	*C-R*	**412725**
200903	*WILYS*	340797
20091	*C-R*	293280=
20094	*C-R*	**473464**
20094	*C-R*	**473464**!
2009496	*GR-DV*	J1123
2009497	*GR-DV*	**416294**!
20095	*C-R*	**473464**
20095	*C-R*	**473464**!
20096	*C-R*	**473464**
2009633	*GR-DV*	**416239**!
20097	*C-R*	**473464**
2009746	*GR-DV*	J1135=
2009750	*GR-DV*	**417316**!
2009751	*GR-DV*	**417343**!
2009752	*GR-DV*	**417172**
2009753	*GR-DV*	**417366**!
2009755	*GR-DV*	**416288**!
2009756	*GR-DV*	J1130
2009757	*GR-DV*	J1127
20098	*C-R*	**473464**!
20098	*C-R*	**473464***
200996	*CLARK*	**471649**!
200997	*ALLCH*	**411253**!
200A11204	*TROS*	40576S
200A11205	*TROS*	40576S
200B18	*C-R*	**471766**!
200CP16M1	*C-R*	**471765**
200F18	*C-R*	**471766**!
200FM18	*C-R*	**471766**!
200W-12	*IH*	**471762**!
200W12	*C-R*	**471762**!
200W15	*C-R*	**471764**!
200W15-M1	*C-R*	**471764**!
200W16	*C-R*	**471765**
200W16M1	*C-R*	**471765**
200W18	*C-R*	**471766**!
200W18-M1	*C-R*	**471766**!
200X230X15SC	*TRSCM*	200X230X15!
200X230X15TC	*TRSCM*	200X230X15!
201	*C-R*	5118
201	*UNIVE*	450311
201-463-8	*SPICE*	**415379**
20100	*C-R*	**473464**
201002	*COOK*	55222=
2010071	*GMC*	**410496**!
201010A	*TW-DI*	**415437**
20103	*C-R*	**473464**
2010451	*GMC*	**416664**
20108D	*IH*	**473215**!
20109	*C-R*	**412027**
2011	*UNIVE*	**471141**!
2011035	*WOOL*	417267
20111	*C-R*	**473464**!
20111	*C-R*	**473464**
20112	*C-R*	**473464**
20112	*C-R*	**473464**!
20112	*MICH*	**471466**!
20112	*UNIVE*	**471466**!
20113	*C-R*	9762S
201140R91	*IH*	**415351**!
2011488	*GMC*	**473010**
20116	*C-R*	**412027**
20117	*C-R*	**412027**
20118	*C-R*	8139
201197	*WILYS*	240151
2012	*FMS*	2012V
2012	*SEAMA*	**455144**
201204R91	*IH*	**412871**!
20124	*C-R*	**410102***
2012455	*GMC*	3136N
20125	*C-R*	**410102***
20126	*C-R*	**410102**
20127	*C-R*	**410102**
2013	*NATL*	1012
2013	*NATL*	1012N
20130	*C-R*	**410102**=
201311	*WILYS*	**471827**
20134	*C-R*	**410102***
20135	*C-R*	**410102***
20135	*SPG*	**471192**
20136	*C-R*	710007
20137	*MICH*	**471255**!
20137	*UNIVE*	**471255**!
201377	*GWI*	**471567**!
20140	*C-R*	**455253***
20141	*SPG*	**470954**!
201412	*BENDI*	**471267**!
2014181	*GMC*	**472185**!
20143	*C-R*	**455253***
20144	*C-R*	487945
20145	*SPG*	**473460**
20146	*C-R*	410102+99198
20146	*C-R*	**413470**
20146	*C-R*	5188!
2014685	*HENRY*	42352S
2014686	*HENRY*	40401
20147	*C-R*	457097=
20148	*C-R*	204506!
20148	*C-R*	487945
201495	*JEFF*	**472439**
20154	*C-R*	205044
20158	*C-R*	55524
2016^1012	*STEM*	**417505**

! Industrial Size/Type * Minor Width Difference

= The U.S. customer service number is 877-4-TIMKEN. The Canadian customer service numbers are 800-565-4927 (English) and 800-565-0438 (French-Canadian).

Mfr. No.	Name	Zero Duplication or Recommended Industrial
20160	C-R	55524
20160	SPG	**471763**
2016169	GMC	370001A
201657A	HERCU	420
20168	C-R	5329
20168	C-R	6465
2016938	EATON	**417967**!
201693800	EATON	**417967**!
20172	C-R	6465
2017341	GMC	50327
2017948	EATON	**473238**
201794800	EATON	**473238**!
201799R91	IH	**470898**
2017OS	JN-MN	**415150**!*
2018206	Y-T	**455330**!
201820600	EATON	**455330**!
2019	SEAMA	**473227**
2019028	GMC	HU042A
2019130	EATON	**415001**!
201933R91	IH	**473463**
20196	C-R	5871
2019708	EATON	**417316**=
2019766	EATON	**450084**!
201VB7	MARI	**412920**!
202	ROCKW	5403
202	UNIVE	**472016**
2020	SEAMA	**471267**!
202008	SPG	204008
20201	GARLK	**471466**!
20205	C-R	494123
20205	C-R	51X63X8!*
20205	C-R	710323*
20209	C-R	494123
202098	FMC	**416149**
2020985	GMC	**471466**!
2020997	GMC	**470625**!
20210	C-R	225110
20210	C-R	51X65X7!
202104	ALLCH	5M403
202108M1	MASSE	**471870**!
202109M1	MASSE	**471766**!
20211106	TROS	**451182**
202115	MIHLE	**415090**
20212X	SPICE	**451948**
20213	GARLK	**471264**!
20215	C-R	5695
20216	C-R	710173
202170	KEN	**415077**
202170	PACIF	**415077**
202180	KEN	325940=
2021809	GMC	370006A
2022006	GMC	5M867
202210	WAYNE	**416149**
202211	HERCU	417535
20225	GARLK	**471255**!
2022846	GMC	HU042A
202287	MICH	**451948**
202287	UNIVE	**451948***
202299	UNIVE	**473466**
202300	MICH	**473466**
202300	UNIVE	**472012**
202301	MICH	**472012**
202306	MICH	**450307**
202306	UNIVE	**450307**
202308	FORD	**471692**!
202312	UNIVE	450311
202313	MICH	450311
202318	UNIVE	**416738**!
202318	UNIVE	450096
202319	MICH	**416738**!
202319	MICH	450096
20232	VICK	**474281**!
202325	MICH	450313
202325	UNIVE	450313
202331	FORD	**473231**!
202335	UNIVE	450532*
20237	GARLK	**471564**
202405C91	IH	**415303**!
2024226	GMC	100494
2024226	GMC	**476470**!
2024331	GMC	**411253**!
20250	C-R	51X73X8
202503	MC-CL	**471633**!
202521	Y-T	**473367**
202521	Y-T	**473367**!
20252SC	TRSCM	**352541**
20252VB	TRSCM	40401
20255	C-R	**472924**!
202562VB	TRSCM	8871
202565VB	TRSCM	9015S
2025OS	JN-MN	**450143**
202602	ALLCH	**473462**
202622VB	TRSCM	9406S
20262KBJ	TRSCM	4148
202632VB	TRSCM	292594
202635SP	TRSCM	6090S
20263TB	TRSCM	**471424**!
20263VTB	TRSCM	**471424**!
202683SB	TRSCM	40360S!
202683SB	TRSCM	**471833**
2026943	GMC	370121A
2026OS	JN-MN	**472179**
202700M1	MASSE	473453
202713TB	TRSCM	**450446**!
202713TB	TRSCM	**474272**
20271VB	TRSCM	5865
2027348	GMC	**473245**!
20273SSZ	TRSCM	**331107N**
20273TB	TRSCM	**472492**!
20273VTB	TRSCM	**472492**
20275	C-R	51X80X8*
202752VHY	TRSCM	40389S
2027672	GMC	HU110A
202784	FORD	7381S
202798M1	MASSE	470059
202798M1	MASSE	**470380**!
2027D	GOODM	**470605**!
20280	C-R	51X81X8*
202801M1	MASSE	**472439**
20281	VICK	**473447**
20282VHY	TRSCM	200339!
20283TA	TRSCM	**472924**
20284SA	TRSCM	**472653**!
2028516	GMC	482415
202852	WILYS	**474278**!
202883TB	TRSCM	**472082**
20289A	C-R	**415035**
20289A	C-R	**415035**!
20289D	IH	**473232**
2028D	GOODM	**415449**!
20290	C-R	51X90X8*
20290D	IH	**473238**
20292	C-R	51X92X8*
20292VBJ	TRSCM	8139
20292VBJ	TRSCM	9762S
2029409	GMC	370023A
2029409	GMC	**417505**
2029431	GMC	50560
202951	CUMMI	**471763**
202964	CUMMI	**471795**
202967	CUMMI	**472164**!
202973	CUMMI	5026$
202974	CUMMI	J1141
202975	CUMMI	J1401*=
202976	CUMMI	5509
202992VH	TRSCM	40085S
202993TA	TRSCM	**470530**
202A402	GE	351487
202VB7	MARI	**412119**!
203	SEAMA	**417542**
203	UNIVE	**473245**!
203003	NATL	203004
203004	NATL	203003
203005	NATL	205005
203005X	SPG	203005!
20300D	IH	5M559
20301	SPG	**472397**!
2030123	GMC	**417507**
2030133	GMC	**417171**!
203015X	SPG	203015
203029M1	MASSE	**415458**!
20302VAY	TRSCM	40301S
203038M1	MASSE	**414045**!
20303TB	TRSCM	**472397**!
203040B	HERCU	485197H=
2030463	SEAMA	**471271**!
2030600	GMC	450467
203063TB	TRSCM	**473463**
2030838	SEAMA	**417349**
2030897	GWI	**471554**!
203097	CUMMI	J1807
2030D	GOODM	**455079**!
2030LD	OSHKO	**471689**!
2031	ALOY	**473234**
203100	CUMMI	**471795**
203101	CUMMI	**473010**
2031059	GMC	**417505**
20313TB	TRSCM	**473242**
2031437	GMC	**472394**
2031437	MCKIN	**472394**
2031438	GMC	**472016**
2031438	MCKIN	**472016**
203153	BENDI	**473367**
203153	BENDI	**473367**!
203153	DIA	**473367**!
203153	DIA	**473367**
203153	GMC	**473367**!
203153	GMC	**473367**
203153	KEN	**473367**!
203153	KEN	**473367**
203153TA	TRSCM	**412725**
20316	SPG	**472636**!
203166	BENDI	**450065**
2031765	GMC	415137!
2031765	GMC	**418028**
2031767	GMC	**415001**!
2031768	GMC	**417159**
2031949	GMC	**473211**!
2031960	FWD	78048
2031960	OSHKO	78048
2032	SEAMA	470059
2032	SEAMA	**470380**!
2032362	GMC	370012A
2032484	GMC	HU066A
20324TA	TRSCM	**412027**
203277M1	MASSE	**471554**!
2033	SEAMA	**471424**!
20332A	C-R	**415379**
20332A	C-R	**415379**!
20334TA	TRSCM	**410102**
20334TA	TRSCM	710007
2033618	GWI	**470954**!
2033900	GWI	**471567**!
2034	ALOY	8549S
2034224	GMC	AR6+370012A
2034225	GMC	370007A
2034226	GMC	**417507**
2034230	GMC	**418028**
2034235	GMC	370019A
2034236	GMC	370012A
2034237	GMC	**417506**
2034238	GMC	370008A
2034361	GMC	**450068**
2034942	GMC	370106A
2035	SEAMA	**417554**!
2035091	GMC	415137!
2035091	GMC	**418028**
203524	BENDI	**470530**!
203544TL	TRSCM	**455253**
2035	GMC	**472164**!
2035506	GMC	370001A
2035507	GMC	370005A
203573	BENDI	**476838**!
203573	WHITE	**473367**!
203573	WHITE	**473367**
203581600	EATON	**415371**
20359	VICK	50528
20359D	IH	**471466**!
2035SR	OSHKO	470059
2035SR	OSHKO	**470380**!
2036108	GMC	**470712**!
203710A	HARWA	20X37X8
2037360	GMC	470059
2037360	GMC	**470380**!
203745	BENDI	50075=
203745	DIA	50075=
203745	IH	50075=
203746	BENDI	**450039**
203746	GMC	**450039**
2037485	GMC	**471341**
2037489	GMC	**470954**!
203766	BENDI	**471570**!
20380	C-R	5797
203809	CINMI	**417355**!
203822	CUMMI	2151H=
2038244	GMC	370106A
2038277	GMC	**473367**!
2038277	GMC	**473367**
203838	CINMI	**417171**!
20383D	IH	**472924**!
203881	BENDI	**471750**!
20388D	IH	**472924**!
2039149	GMC	**418028**
2039150	GMC	HU066A
2039297	EATON	**470898**
20393D	IH	**472924**!
20394	SPG	**473227**!
203A13206	TROS	1165
203FF112	C-R	**470774**!
204	C-R	5116
204	ROCKW	5405
204	UNIVE	**472636**!
204009	SPG	6590S
204012	SPG	6906S
2040442	GMC	5957S
2040443	GMC	5951
20405	C-R	1975
204051	KEN	**415876**
204051	PACIF	**415876**
204075	NATL	204017
20408	C-R	1955
20408	C-R	52X65X9!
2040H-7	JAE	**470682**
2040H24	JA-MI	**415449**!
2040H24	JAE	**415449**!
2040H25	JA-MI	**415995**!
2040H25	JAE	**415995**!
2040H26	JA-MI	**473205**

! Industrial Size/Type * Minor Width Difference $ F-M Number Is Part Of A Kit

= The U.S. customer service number is 877-4-TIMKEN. The Canadian customer service numbers are 800-565-4927 (English) and 800-565-0438 (French-Canadian).

Mfr. No.	Name	Zero Duplication or Recommended Industrial
2040H26	JAE	473205
2040H7	JA-MI	470682
2041	LUF	415035!
2041	LUF	415035
2041/1043	STEM	370192A
20410007	TROS	471619!
204102	CONTI	417196!
20410807	TROS	471785!
20411207	TROS	471354!
20411604	TROS	471787
20411607	TROS	224045
20411607	TROS	40X62X12!
20412106	TROS	484054
20412406	TROS	472258!
20412407	TROS	470774!
20413204	TROS	480630
20413207	TROS	480630!
20413604	TROS	7994S
20413607	TROS	8421S
2041497	GMC	370012A
20415	C-R	52X69X10!
204167H1	HOUGH	472636!
204167H1	IH	472636!
2041807	GMC	416282
2042	ALOY	442874
20420	C-R	1955
20420	C-R	52X65X9!
20421	C-R	4990
20423	C-R	1884
20423	C-R	52X68X8!
20424	C-R	52X68X8V!
20424	C-R	710190
20425	C-R	3087
20426	C-R	225220
20426	C-R	52X68X8!
20427	C-R	4990
20427	GARLK	470954!
204275SP	TRSCM	3087
20428	C-R	225220
20428	C-R	4990*
20428	C-R	710312
20429	C-R	225275
2042936	GMC	417171!
204299	UNIVE	473467!
2043	ALOY	473445
2043	MINNM	205004
20430	C-R	225225
20430	C-R	52X70X8!
204300	MICH	473467
204300	UNIVE	472015!
204300SL	MICH	473467
204301	MICH	472015!
204306	MICH	410308!
204306	UNIVE	410308!
204306SLA	MICH	6180=
20431	C-R	4898
204312	UNIVE	472016
204313	MICH	472016
204318	UNIVE	472409!
204319	MICH	472409!
20432	C-R	710187
204325	MICH	473243
204325	UNIVE	473243
204335	MICH	413469!
204335	UNIVE	413469!*
20434	C-R	225210
20435	C-R	52X72X8V
20439	C-R	225540
204399	BENDI	450593!
20440	C-R	225230
20441	C-R	52X72X8V
20442	C-R	225230
20444	C-R	225230
20444	C-R	52X72X8!
2044444	GMC	254287
2044445	GMC	471570!
20445	C-R	225230
2044531	GMC	40468
2044540	GMC	418028
2044540	GMC	455137!
20446	C-R	5696
20446	GARLK	471554!
20447	C-R	710230
20448	C-R	710527
20448	GARLK	471643!
20450	C-R	225275
204505	NATL	204020
204507	NATL	204029
20453	C-R	52X75X12!
20455	C-R	1884*
20455	C-R	710292*
204553	HARRI	416273!
20456	VICK	471341!
20458	GARLK	471567!
2045996	GMC	417507
20460	C-R	225278
204611	CINMI	472397!
204614A	HERCU	473241
204617	CINMI	414045!
204621	BENDI	50327
204621	DIA	50327
204621	IH	50327
20463	FMC	473237!
204638	WILYS	6489
20465	C-R	710107
20467	FMC	451078!
2046991	GMC	415458
2047	ALOY	473317
20470	C-R	52X80X10
2047159	GOODM	417316!
2047175	GOODM	415995!
2047176	GOODM	417487
2047232	GOODM	417205!
2047260	GOODM	472157
2047260	GOODM	472157!
2047261	GOODM	472157!
2047261	GOODM	472157
2047277	GOODM	415138!
2047288	GOODM	417262!
20473	C-R	52X80X10!
204731A	HERCU	471192
204746	FWD	8126S
204771	BENDI	471553!
204839	HERCU	455197N
204839B	HERCU	455197N
2048471	GMC	476470
2048471	GMC	476470!
20488	GARLK	471643!
20489	VICK	471553!
2048D5	WHITE	415960
2049	ALOY	7687S
20490	C-R	52X85X7*
20490	C-R	52X85X8
20493	VICK	472179
204939	BENDI	471466!
204949	BENDI	470625!
20495	C-R	52X85X7*
204971	BENDI	471526!
204A111X06.5C	TROS	7442H
204E4248	FORD	470712!
204E7657	FORD	1097N
204VB7	MARI	415001!
205	C-R	5108
205	ROCKW	5406
20500	C-R	5686
20500	C-R	5696
205002	SPG	200354
205005	CONTI	471733
20501	C-R	5685
205012	KOHL	471649!
205020	NATL	204020
205020	NATL	204505!
205020	SPG	204020
205020	SPG	204505!
205058	SPG	9015S
2051473	GMC	416892
20520	C-R	484064V
205209A	TW-DI	416892!
20522	SPG	472258!
205273	FREIG	5481$
205282	CINMI	415697!
205282	CINMI	455547
205312JX	MICH	80313
205358A	HERCU	471538!
20537	C-R	5877
20538	C-R	5877
2054	SEAMA	470625!
20542	C-R	5877
205493	LK-BT	42352S
2054BT	SPG	6358
2054BT0	SPG	6358
20554	C-R	451948*
20555	C-R	451948*
20559	BR-WN	470059
20559	BR-WN	470380!
20560	C-R	4162
20561	C-R	473466
2056124	GMC	417505
2056401	GMC	471141!
20568	C-R	473466
205705	CINMI	472636!
205705A	HERCU	471267!
205708	ALLCH	474278!
2057128	GMC	472394
205714	CINMI	415023
205724	FWD	415035=
205737	CINMI	416404!
205747	HERCU	455189
205747B	HERCU	455189
2057480	GMC	370003A
2057761	GMC	412473!
2058	ALOY	480630
20582	C-R	473466
205821R91	IH	415697!
205821R91	IH	455547
205822R91	IH	473473
20582 3	OILGR	471554!
2058243	GMC	B300
205834	ALLCH	50462
2058459	GMC	471733
20585	C-R	473466
20586	C-R	473466
20590	C-R	472012
2059264	GMC	415995!
20594	C-R	472012
2059474	GMC	417196!
205952	ALLCH	471554!
2059756	GMC	450084!
205976R91	IH	473459
205987	ALLCH	472185!
20599	C-R	472012
205A12407	TROS	6760S
205B12306	TROS	51322
205FF112	C-R	470774!
205VB7	MARI	415458!
205Z1	C-R	471619!
206	CHEL	471224!
20600	C-R	472012
2060012	CHRYS	455336
20603	CALSO	472636!
20604	C-R	472012
20604	CALSO	416426H=
20605	C-R	472012
2060510	GMC	470898
2060531	GMC	471649!
206072	ALLCH	330385!
20608	C-R	6954S
20608	SPG	471267!
206086M1	MASSE	417134
2061	ALOY	1945
2061	C-R	471619!
206110	C-R	450129
206110	C-R	472826
206110	CLARK	450129
206110	CLARK	472826!
206110M1	C-R	450129
206110M1	C-R	472826
206112	C-R	470774!
206112M1	C-R	470774!
206112Q6	C-R	470774!
206116	C-R	480630!
206116M1	C-R	480630!
20612	C-R	473420
206120	CLARK	471224!
20614	C-R	471785
20614K	CLARK	471785!
20614M1	C-R	471785
20615	C-R	473427
20616	C-R	471354!
20616A	CONTI	471354!
20618	AT-PL	471787!
20618	C-R	471787
20618M1	C-R	471787
20619	C-R	450124=
2061M1	C-R	471619!
20620	C-R	450307
206204	CLARK	473214!
206205	CLARK	472185!
20621	C-R	450307
20621	VICK	412920!
206222	CLARK	471787!
206228	SEAMA	416664!
206233	SEAMA	473214
206253SZ	TRSCM	332134
206253VSB	TRSCM	484064V
206257	CLARK	471765!
2062667	GWI	415234!
206273TL	TRSCM	473449
20628	C-R	450307
2062844TL	TRSCM	5877
206284SA	TRSCM	451948
20629	NORDG	471760
206294TL	TRSCM	473446
2063037TB	TRSCM	472012
206303VB	TRSCM	6954S
206306	UNIVE	473471
2063063TL	TRSCM	450307
20631	C-R	450339
206312	UNIVE	472020
206318	UNIVE	470354
2063192	GMC	450040
2063220UB	TRSCM	80313
206325	MICH	473245!
206325	UNIVE	473245!
206335	MICH	412943
206335	UNIVE	412943*
206337	UNIVE	50798*
20635	C-R	450307

! Industrial Size/Type * Minor Width Difference $ F-M Number Is Part Of A Kit
= The U.S. customer service number is 877-4-TIMKEN. The Canadian customer service numbers are 800-565-4927 (English) and 800-565-0438 (French-Canadian).

Mfr. No.	Name	Zero Duplication or Recommended Industrial
206364TA	TRSCM	**455260**
20642	C-R	**450307**
206426	ALLCH	**473313**
206428	CLARK	**415001**!
20643	C-R	**450307**
2064489	GMC	**417506**
206449	ALLCH	**450456**!
206449	CLARK	**416332**!
20644909	ALLCH	**450456**!
206450	ALLCH	**415001**!
20645007	ALLCH	**415001**!
2064731	GMC	370047A
20650	C-R	450311
2065073	TAYLR	55539=
2065078	TAYLR	**417544**
20651	C-R	450311
2065366	GMC	**415960**
2065367	GMC	**411253**!
206538	ALLCH	**471765**!
20653812	ALLCH	**471765**!
206545	CLARK	**470898**!
206546	CLARK	**411253**!
206547	CLARK	**412871**!
206548	CLARK	**415483**!
206550	CLARK	**470712**!
206552	CLARK	**472258**
206553	CLARK	**471192**
206554	CLARK	**471821**!
206556	CLARK	**470898**
206557	CLARK	**472636**!
206558	CLARK	**472636**!
206559	CLARK	**470712**!
206560	CLARK	**471554**!
206561	CLARK	470059
206561	CLARK	**470380**!
206563	CLARK	**471765**!
206564	CLARK	**471766**!
206565	CLARK	**471835**!
206566	CLARK	417267
206569	CLARK	**472354**!
206570	CLARK	**470898**
206571	CLARK	**471141**!
206572	CLARK	**470898**
206574	CLARK	**472258**
206575	CLARK	**472636**!
2065760	GWI	**473459**
206578	ALLCH	**471766**!
20658	C-R	450311
20659	C-R	450311
206593	CLARK	**471763**
2065OS	JN-MN	**471549**!
2066126	GMC	**417487**!
2066126	GMC	**417487**
2066157	GMC	**472924**!
2066184	GMC	**473238**
206648	CLARK	470059
206648	CLARK	**470380**!
20669	C-R	5756
2067088	GMC	**410987**!
206714	CLARK	**415458**!
2067175	CHRYS	331301N
2067176	CHRYS	40369S
2067178	CHRYS	5589
2067179	CHRYS	**471821**!
2067181	CHRYS	6064
2067182	CHRYS	6985
2067183	CHRYS	7107A=
2067184	CHRYS	7107A=
2067185	CHRYS	7934S
2067186	CHRYS	**450666**
2067187	CHRYS	5458
2067188	CHRYS	5458
2067190	CHRYS	5499=
2067191	CHRYS	5573
2067192	CHRYS	6818
2067193	CHRYS	7537S
2067195	CHRYS	**471193**
2067198	CHRYS	8139
2067200	CHRYS	470059
2067200	CHRYS	**470380**!
2067201	CHRYS	470059
2067201	CHRYS	**470380**!
2067204	CHRYS	**473235**
2067206	CHRYS	6815
2067207	CHRYS	**471835**!
2067208	CHRYS	**473228**
2067209	CHRYS	9568
2067211	CHRYS	5778
2067212	CHRYS	6930
2067213	CHRYS	6930
2067214	CHRYS	7044NA
2067215	CHRYS	7994S
2067216	CHRYS	**451182**
2067218	CHRYS	7457N
206722	CLARK	**473447**
206731	CLARK	**470565**!
20674	C-R	200110
206742	CLARK	**411394**!
206775	CLARK	**472144**!
20678	C-R	200110*
20678	GARLK	**471267**!
206785	ALLCH	**471554**!
206786	ALLCH	**473215**!
206789	ALLCH	**473215**!
206791	ALLCH	**473238**
206801	CLARK	**410737**!
2068106	GMC	**472636**!
206834	CLARK	**472560N**
206840	ALLCH	**472636**!
206849	CLARK	55193=
206850	CLARK	**472924**!
2068504	GMC	**472394**
206864	CLARK	**470898**
2068682	GMC	**472636**!
2068683	GMC	**415449**!
20687	C-R	**416738**!
20687	C-R	450096
20687	GARLK	**471570**!
20689	C-R	**416738**!
20689	C-R	450096
206893	CLARK	**413248**
20690	C-R	**416738**!
20690	C-R	450096
206948	CUMMI	473285V=
20697	C-R	**416738**!
20697	C-R	450096
20698	C-R	**416738**!
20698	C-R	450096
206A	CHEL	**480210**!
206FF112	C-R	**470774**!
206VB7	MARI	**411376**!
206W110	C-R	450129
206W110	C-R	**472826**
206W110M1	C-R	450129
206W110M1	C-R	**472826**
206W112	C-R	**470774**!
206W112-T8	C-R	**470774**!
206W14	C-R	**471785**
206W14M1	C-R	**471785**
206W18	C-R	**471787**
206W18M1	C-R	**471787**
207	C-R	5390
207	CHEL	**471231**!
207	IH	**471231**!
207	ROCKW	5410
207	UNIVE	**411245**!
2070	SEAMA	**471835**!
2070065	GOODM	J1115
207009	COOK	**410737**!
2070113	CHRYS	**473235**
20702	C-R	**416738**!
20702	C-R	450096
2070639	GMC	**471766**!
2070779	GMC	**415371**
2070782	GMC	**416865**!
2070788	CHRYS	**470487**!
207085	CLARK	**415498**
207086	GAL	**471689**!
207086	WHITE	**471689**!
20711607.5	TROS	450177
20712007.5	TROS	**473421**
2071215	GMC	100263
2071215	GMC	3905
20712407.5	TROS	**472287**!
20712412	TROS	**472287**!
2071250	GMC	**471787**!
20715	C-R	**416738**!
20715	C-R	450096
20715	EATON	**417316**
20715	FULLE	**417316**
20715	GARLK	**471646**!
207153	FREIG	5405$
20716	C-R	**416738**!
20716	EATON	**470625**!
20716	FULLE	**470625**
207190	CLARK	**473243**
2071Y	IH	7600S
2072	SEAMA	**415036**
2072055	CHRYS	340797
2072056	CHRYS	240731
2072707	CHRYS	41257!
2072707	FORD	41257!
207273	CLARK	**470530**!
20728	C-R	**416738**!
20728	C-R	450096
20729	C-R	**416738**!
20729	C-R	450096
2073	ALOY	3747
20730	GARLK	**470590**
2073173	FLXIB	370036A
2073173	GMC	370036A
2073173	GMC	370349A
20731A	C-R	**415483**!
20735	C-R	80313
2073613	GMC	**471271**!
2074	SEAMA	55367=
20741	C-R	450313
207418	CLARK	340771
20742	C-R	450313
2074449	GMC	**417507**
2074449	GMC	**417507**!
2074702	GMC	**416107**!
2074702	GMC	455073
2074786	GMC	**472354**!
20748	C-R	450313
207483	CLARK	**470565**!
20749	C-R	450313*
20750	C-R	450532
20752	C-R	450343
207523	CINMI	**415124**
207523	CLARK	**471765**!
2075286	GMC	**471141**!
207529	CLARK	**470712**!
207537R91	IH	**473459**
20754	C-R	450343
207545	CLARK	50266
207546	CLARK	**416404**!
20756	TMTR	6590S
207565	CLARK	**471835**!
2075665	GMC	6644
207570R91	IH	**470954**!
20758	C-R	**455260**
20759	C-R	**455260***
2076	SEAMA	**417211**!
2076132	GMC	**415082**
20762	FULLE	**472311**
207640	CLARK	**471192**
207644	CLARK	**471835**!
2076549	GMC	**471141**!
207656	CLARK	**471765**!
20766	C-R	6077
207672	CLARK	**471649**!
207693	CLARK	**473016**!
207699	CLARK	**470605**!
207749	CLARK	**471192**
20775	VICK	**412861**
207750	CLARK	**471835**!
2078	ALOY	4099
2078	SEAMA	**415984**!
2078026	GMC	370005A
207816	CLARK	**470898**
2078535	GMC	**416654**
2079	ALOY	4249
207919	CLARK	450398
207919	CLARK	**471267**!
20793	FMC	**471192**
207948	CLARK	**472439**
207960	WILYS	410059
207960	WILYS	**470380**!
20798	SIDEW	**473517**!
2079836	GMC	**415437**
2079836	GMC	**415437**!
207993	ALLCH	**471835**!
2079SR	OSHKO	470059
2079SR	OSHKO	**470380**!
207A	CHEL	**471267**!
207VB7	MARI	**416865**!
208	BUSHH	6906S
208	C-R	5111
208	C-R	5111S
208	ROCKW	5452
208	SEAMA	455375=
208	UNIVE	**415449**!
208069	CUMMI	**417621**
20807	FULLE	713750
20807	SIDEW	**471870**!
20809D	IH	**416921**!
2081	ALOY	3677
20811207	TROS	1077=
20811605	TROS	1070=
20811607	TROS	**471795**
20812007	TROS	**473211**!
20812404	TROS	**455576**!
20812405	TROS	**471192**
20812406	TROS	**471192**
20812407	TROS	**471192**
20812410	TROS	**471192**
20812807	TROS	**473224**!
20813207	TROS	**473227**
20814004	TROS	**481181**!
208147	ALLCH	**473197**
2081839	GMC	5957S
2082	ALOY	8314
2082924	GMC	**415007**
2082925	GMC	**473464**!
2082925	GMC	**473464**
2082926	GMC	**415458**
2083	ALOY	3543

! Industrial Size/Type * Minor Width Difference $ F-M Number Is Part Of A Kit
= The U.S. customer service number is 877-4-TIMKEN. The Canadian customer service numbers are 800-565-4927 (English) and 800-565-0438 (French-Canadian).

Mfr. No.	Name	Zero Duplication or Recommended Industrial
208306	UNIVE	473473
208312	UNIVE	471138!
208318	UNIVE	410737!
208325	MICH	472636!
208325	UNIVE	472636!
208335	MICH	411253!
208335	UNIVE	411253!
208337	MICH	412920!
208348	HYST	450400
208348	MICH	455136
208350	MICH	411376!
208350	UNIVE	411376!
208362	MICH	415234!
208362	UNIVE	415234!*
208370	CLARK	330385!
208375	UNIVE	415259!
208385	CLARK	472636!
208417	ALLCH	473197
2084190	GMC	410987!
208432	CINMI	415645!
208432	CINMI	455104
208436	ALLCH	471835!
2084411	CHRYS	5576
208458	WAUKE	470898=
2084868	GMC	415458!
208488	CLARK	471466!
208494	CLARK	471504!
2085247	FLXIB	470059
2085247	FLXIB	470380!
2085247	GMC	470059
2085247	GMC	470380!
2085249	GMC	417484!
208526	WAUKE	416888=
208538	CLARK	470530!
2085764	GMC	455080*
208579	CUMMI	415937
2085RC	SUL	481073
208623	JEFF	415001!
208633C1	IH	472642
208633C1	ROCKW	472642*
208711	ALLCH	473197
208714	ALLCH	473197
208742	CLARK	472636!
208746	WILYS	5585$
208748	WILYS	5585$
208763	CLARK	6241S
208788	CLARK	415995!
2088	ALOY	4072
208814	HYST	415090
208821R91	IH	417082
2089	ALOY	224820
20894	JOY	471785!
208986	H-S	470530!
208A	CHEL	471466!
208VB7	MARI	455079!
209	C-R	5112
209	C-R	5112S
209	UNIVE	415988*
2090	ALOY	9316
2090146	GMC	370023A
2090539	GMC	240435
20906	C-R	710175
20907D	IH	450593!
209090	HYST	471504
2091	STEM	370106A
2091	STEM	9128S
20915	C-R	340900
209158	CLARK	471766=
2091906	GMC	471887
2092	ALOY	1994
20920	C-R	41013S
20920	FULLE	415991
2092491	GMC	417171!
20926	C-R	6590S*
20927	IDEAL	35127
209273VHY	TRSCM	6590S
2092767	GMC	6703S
2093	ALOY	1984
209312VH	TRSCM	40973S
2093289	GMC	412473!
209341	TW-CO	471765!
209354	WILYS	9613S
20938	C-R	6590S
2093940	GMC	473473
2093H	SPG	2093H=
2094	ALOY	417158
2094257	GMC	471267!
2094297	GMC	472258
209440	CLARK	473449!
209440	GAL	473449
2094440	GMC	370008A
20946	C-R	6590S
2095	ALOY	3732S
2095	UNIVE	414045!
209501	CLARK	417344!
20952	C-R	6590S
2095463	GMC	50199S!
2095463	GMC	6863S!
2095539	GMC	240319
209557M1	MASSE	473229
209562M1	MASSE	410737!
209564	CLARK	415995!
209587	CLARK	412119
209587	MIXMO	412119!
2096	ALOY	8312
2096	SEAMA	415138!
20960	C-R	40627S=
2096046	GMC	415088
209623	CLARK	415449
2096357	GMC	471787!
2096367	GMC	471553!
20965	C-R	40973S*
2096658	GMC	472164!
2096RC	SUL	473242
2097	CHEL	472164!
20975	C-R	40973S
20977	CONTI	240007=
209778	CLARK	415483!
209788	CLARK	415995!
2098	CHEL	473228
2098550	GMC	417344!
2098753	GMC	418028
2098753	GMC	455137!
209907	WILYS	471787
209979	CLARK	473463
2099RC	SUL	470334!
209VB7	MARI	415302
20A500	LAVIN	40526S
20H1160	MINNM	204002
20J	OSHKO	473367!
20J	OSHKO	473367
20RL204	CONTI	470530!
20RL294	CONTI	470530!
20RL294	KEN	470530!
20X28X6SC	TRSCM	20X28X6
20X28X6TC	TRSCM	20X28X6
20X30X5A	ISP	20X30X5
20X30X7SC	TRSCM	20X30X7
20X30X7TC	TRSCM	20X30X7
20X32X7SC	TRSCM	20X32X7
20X32X7TB	TRSCM	20X32X7
20X32X7TC	TRSCM	20X32X7
20X35X7	NATL	1963
20X35X7SB	TRSCM	20X35X7!
20X35X7SC	TRSCM	20X35X7!
20X35X7TC	TRSCM	20X35X7!
20X36X7SC	TRSCM	20X36X7
20X36X7TC	TRSCM	20X36X7
20X37X7ASN(32)	ISP	20X37X7
20X37X8	SIMRT	20X37X8
20X37X8SC	TRSCM	20X37X8
20X37X8TC	TRSCM	20X37X8
20X38X7SC	TRSCM	20X38X7
20X38X7TC	TRSCM	20X38X7
20X40X10SC	TRSCM	20X40X10
20X40X10TC	TRSCM	20X40X10
20X40X7SC	TRSCM	20X40X7
20X40X7TC	TRSCM	20X40X7
20X42X10SC	TRSCM	20X42X10
20X42X10TC	TRSCM	20X42X10
20X42X7SC	TRSCM	20X42X7
20X42X7TC	TRSCM	20X42X7
20X47X7SC	TRSCM	20X47X7
20X47X7TC	TRSCM	20X47X7
20X52X7SC	TRSCM	20X52X7
20X52X7TC	TRSCM	20X52X7
210	C-R	2297V+99599
210	C-R	39807
210	C-R	39807+99599
210	UNIVE	415458!
21000707	GMC	324204
21000708	GMC	327995
21000708	GMC	4307V
21001111	GMC	714662
21001532	GMC	718610
21001660	GM	4615V
21001662	GMC	714616
21002282	GM	4614N
21002283	GM	4613N
21002669	GM	4613N
21002670	GM	4613N
21002741	GM	4615V
21002778	GM	718610
21002853	GM	4701N=
21002853	GMC	4701N=
21002872	GM	4613N
21002872	GMC	4613N
21002873	GM	4614N
21002873	GMC	4614N
21003352	GM	4613N
21003352	GMC	4613N
21003354	GMC	4614N
210039	ALLCH	415449!
21003902	ALLCH	415449!
21003R1	IH	OK223
21004	GARLK	471224!
21004	US-EL	470712!
210063	GMC	472924!
21007	US-EL	472185!
2100863	GMC	415960
2100864	GMC	411253!
21009B	WAYNE	455336
21009B	WAYNE	455336
21010	C-R	410308!
210107	HYST	473458!
210108	HYST	471689!
210124	WAYNE	473448
21014	WOODB	471730
21015	VICK	471787!
2101688	FMC	240735
2102	ALOY	4302
21020	GARLK	471649!
2102101X	GRAM	410308!
21024015A	HARWA	210X240X15
21025015A	HARWA	210X250X15
210256	ALLCH	45013S
21028	GARLK	471689!
2102985X	GRAM	471785!
2102986X	GRAM	471835!
2102987X	GRAM	471141!
2102SK	SPG	2102
2103	ALOY	1177
21030	GARLK	471689!
2103027X	GRAM	473227
2103074X	GRAM	471192
2103075X	GRAM	473228!
2103076X	GRAM	480491
2103078X	GRAM	472179
2103080X	GRAM	240119
2103223X	GRAM	415449!
2103224X	GRAM	415302
2103226	GMC	415371
2103226X	GRAM	472636!
2103227	GMC	416865!
210325	MICH	411394!
210325	UNIVE	411394!
21033	JOY	472492!
210335	MICH	410694!
210335	UNIVE	410694!*
210336	KOHL	470328
210336	KOHL	481213!
210350	MICH	416444
210350	UNIVE	416444
210354	UNIVE	455647=
21036	EATON	713750
2103RC	SUL	417316!
2104	ALOY	473238
21040	C-R	2002
21040	C-R	54X65X8!
21040	GARLK	471733
21041	C-R	2002
2104221	GMC	415371
2104222	GMC	416865!
210431	FWD	473238
21045	C-R	710073
21048	C-R	225410
21050	C-R	6090S
2105042	GMC	472636!
21051	HYST	471763
2105131	GMC	455151
21052	C-R	710239
210544R91	IH	5406
21055	C-R	6090S
21059	C-R	473204*
21060	C-R	473204
21061	C-R	473204
2106108	CLARK	416422
210612	CLARK	471271!
210616	FWD	471649!
21063	C-R	473204
21064	C-R	471950
21065	C-R	41013S
2106680	CLARK	417544*=
2106808	CLARK	416112N=
2106846	CLARK	JV1999=
2106850	CLARK	417545
21069	C-R	5589$
2106900	CLARK	710024
21070	C-R	5589
2107025	CLARK	370038A*
210712	BENDI	471766!
21072	C-R	450639*
2107282	CLARK	472660
21073	C-R	470898
2107356	CLARK	370149A*
2107358	CLARK	370166A*
210737	EATON	416654
2107379	CL-HU	417545=

! Industrial Size/Type * Minor Width Difference $ F-M Number Is Part Of A Kit
= The U.S. customer service number is 877-4-TIMKEN. The Canadian customer service numbers are 800-565-4927 (English) and 800-565-0438 (French-Canadian).

Mfr. No.	Name	Zero Duplication or Recommended Industrial
210737R91	*IH*	**472409**!
210738R91	*IH*	**415007**
21074	*C-R*	**470898**
21075	*C-R*	**470898**
21076	*C-R*	**450639**
2107639	*GRAM*	**471391**!
2107640	*GRAM*	**473463**
2107642	*GRAM*	**471141**!
2107643	*GRAM*	450463
2107662	*CLARK*	**415076***=
2107687	*GRAM*	**471766**!
21077	*US-EL*	**413248**
2107720	*CLARK*	4144V=
21079	*C-R*	**470898**
2107RC	*SUL*	**416892**!
2108	*HWY*	417494
2108093	*CLARK*	417904N*=
21081005034	*RENAU*	713155
21082	*C-R*	**470898***
21082	*C-R*	**470898**
210834	*CUMMI*	**472409**
21084	*C-R*	**470898***
2108446	*CLARK*	4353
2108457	*CLARK*	370087A*
21086	*C-R*	**470898**!
21086-2174	*GARLK*	**415995**!
21086-2177	*GARLK*	**417351**!
21086-2178	*GARLK*	**417351**!
21086-2180	*GARLK*	**417487**
21086-2180	*GARLK*	**417487**!
21086-2181	*GARLK*	**417487**
21086-2182	*GARLK*	**417487**
21086-2183	*GARLK*	**417488**!
21086-2184	*GARLK*	**417488**!*
21086-2185	*GARLK*	**417488**!
21086-2186	*GARLK*	**415088**
21086-2187	*GARLK*	**415088**
21086-2187	*GARLK*	**415088**!
21086-2188	*GARLK*	**455019**!
21086-2189	*GARLK*	55548
21086-2195	*GARLK*	455820*
21086-2198	*GARLK*	**455019**!*
21086-2199	*GARLK*	**455019**!*
21086-2200	*GARLK*	**455019**!*
21086-2201	*GARLK*	55155*=
21086-2202	*GARLK*	55155=
21086-2203	*GARLK*	55155*=
21086-2204	*GARLK*	455015*
21086-2205	*GARLK*	455015*
21086-2206	*GARLK*	455015
21086-2210	*GARLK*	55141*
21086-2211	*GARLK*	55141*
21086-2212	*GARLK*	55141*
21086-2222	*GARLK*	455020*
21086-2225	*GARLK*	**417621**!
21086-2226	*GARLK*	**417621**!
21086-2227	*GARLK*	**417621**!
21086-2228	*GARLK*	**416288**!
21086-2229	*GARLK*	**416288**!*
21086-2230	*GARLK*	**416288**!*
21086-2231	*GARLK*	**417171**!
21086-2232	*GARLK*	**417171**!*
21086-2233	*GARLK*	**417171**!
21086-2234	*GARLK*	**417172***
21086-2235	*GARLK*	**417172***
21086-2236	*GARLK*	**417172***
21086-2237	*GARLK*	**416297***
21086-2246	*GARLK*	**415021**
21086-2247	*GARLK*	**415021***
21086-2248	*GARLK*	**415021***
21086-2249	*GARLK*	**456105***
21086-2250	*GARLK*	**456105***
21086-2251	*GARLK*	**456105**
21086-2252	*GARLK*	417490*
21086-2253	*GARLK*	417490*
21086-2254	*GARLK*	417490
21086-2255	*GARLK*	**455336***
21086-2256	*GARLK*	**455336***
21086-2257	*GARLK*	**455336***
21086-2260	*GARLK*	6358
21086-2261	*GARLK*	417490
21086-2267	*GARLK*	455022*
21086-2268	*GARLK*	455022*
21086-2269	*GARLK*	455022*
21086-2270	*GARLK*	**476470**
21086-2271	*GARLK*	**476470**
21086-2272	*GARLK*	**476470**
21086-2273	*GARLK*	**417181**!
21086-2274	*GARLK*	**417181**!*
21086-2275	*GARLK*	**417181**!
21086-2276	*GARLK*	**418028**
21086-2276	*GARLK*	455137!
21086-2277	*GARLK*	**418028**
21086-2277	*GARLK*	455137!
21086-2278	*GARLK*	**418028**
21086-2278	*GARLK*	455137!
21086-2279	*GARLK*	**417353**!
21086-2280	*GARLK*	**417353**!*
21086-2281	*GARLK*	**417353**!*
21086-2282	*GARLK*	**456305**
21086-2284	*GARLK*	**416865**!
21086-2288	*GARLK*	**415023**
21086-2289	*GARLK*	**415023**
21086-2290	*GARLK*	**415023**
21086-2294	*GARLK*	455328*
21086-2295	*GARLK*	455328*
21086-2296	*GARLK*	455328*
21086-2298	*GARLK*	**417491***
21086-2299	*GARLK*	**417491**
21086-2300	*GARLK*	**415085**!
21086-2300	*GARLK*	456648
21086-2306	*GARLK*	**416313**
21086-2307	*GARLK*	**416313***
21086-2308	*GARLK*	**416313**
21086-2312	*GARLK*	455024
21086-2313	*GARLK*	455024*
21086-2314	*GARLK*	455024*
21086-2321	*GARLK*	**412473**!
21086-2322	*GARLK*	**412473**!
21086-2323	*GARLK*	**412473**!
21086-2324	*GARLK*	**417191**
21086-2324	*GARLK*	455165!
21086-2325	*GARLK*	**417191**
21086-2325	*GARLK*	455165!
21086-2326	*GARLK*	**417191**
21086-2326	*GARLK*	455165!
21086-2327	*GARLK*	**417354**!*
21086-2328	*GARLK*	**417354**!*
21086-2329	*GARLK*	**417354**!
21086-2330	*GARLK*	416321
21086-2336	*GARLK*	**415025**
21086-2337	*GARLK*	**415025***
21086-2338	*GARLK*	**415025***
21086-2342	*GARLK*	416327
21086-2345	*GARLK*	**417492***
21086-2346	*GARLK*	**417492***
21086-2347	*GARLK*	**417492**
21086-2348	*GARLK*	**417493***
21086-2349	*GARLK*	**417493***
21086-2350	*GARLK*	**417493**
21086-2354	*GARLK*	417494*
21086-2355	*GARLK*	417494*
21086-2356	*GARLK*	417494
21086-2357	*GARLK*	**455026***
21086-2358	*GARLK*	**455026***
21086-2359	*GARLK*	**455026***
21086-2363	*GARLK*	**455471***
21086-2364	*GARLK*	**455471***
21086-2365	*GARLK*	**455471***
21086-2366	*GARLK*	**415991**
21086-2366	*GARLK*	455146!
21086-2367	*GARLK*	**415991**
21086-2367	*GARLK*	455146!
21086-2368	*GARLK*	**415991**
21086-2368	*GARLK*	455146!
21086-2369	*GARLK*	**417196**!*
21086-2370	*GARLK*	**417196**!*
21086-2371	*GARLK*	**417196**!
21086-2372	*GARLK*	**415437**
21086-2373	*GARLK*	**415437**
21086-2373	*GARLK*	**415437**!
21086-2374	*GARLK*	**415437**
21086-2374	*GARLK*	**415437**!
21086-2375	*GARLK*	**417198***
21086-2376	*GARLK*	**417198***
21086-2377	*GARLK*	**417198**
21086-2378	*GARLK*	**415027**
21086-2379	*GARLK*	**415027**
21086-2379	*GARLK*	**415027**!
21086-2380	*GARLK*	**415027**
21086-2381	*GARLK*	**417495***
21086-2382	*GARLK*	**417495***
21086-2383	*GARLK*	**417495**
21086-2384	*GARLK*	**415559***
21086-2385	*GARLK*	**415559***
21086-2386	*GARLK*	**415559***
21086-2390	*GARLK*	**417496***
21086-2391	*GARLK*	**417496**
21086-2392	*GARLK*	**417496***
21086-2393	*GARLK*	**415711***
21086-2394	*GARLK*	**415711***
21086-2395	*GARLK*	**415711**
21086-2396	*GARLK*	417497*
21086-2397	*GARLK*	417497*
21086-2398	*GARLK*	417497
21086-2399	*GARLK*	417498*
21086-2400	*GARLK*	417498*
21086-2401	*GARLK*	417498
21086-2402	*GARLK*	55028*
21086-2417	*GARLK*	**416332**!
21086-2418	*GARLK*	**416332**!
21086-2419	*GARLK*	**416332**!
21086-2420	*GARLK*	**415937**!
21086-2421	*GARLK*	**415937**!
21086-2422	*GARLK*	**415937**!
21086-2423	*GARLK*	**417355**!
21086-2424	*GARLK*	**417355**!*
21086-2425	*GARLK*	**417355**!
21086-2426	*GARLK*	**416125**!
21086-2427	*GARLK*	**416125**!*
21086-2428	*GARLK*	**416125**!*
21086-2432	*GARLK*	**417499**
21086-2435	*GARLK*	415832
21086-2441	*GARLK*	**417501***
21086-2442	*GARLK*	**417501***
21086-2443	*GARLK*	**417501**
21086-2447	*GARLK*	55030*
21086-2448	*GARLK*	55030*
21086-2449	*GARLK*	55030*
21086-2450	*GARLK*	55646=
21086-2453	*GARLK*	416670*
21086-2454	*GARLK*	416670*
21086-2455	*GARLK*	416670*
21086-2459	*GARLK*	417502*
21086-2462	*GARLK*	**415379**
21086-2462	*GARLK*	**415379**!
21086-2463	*GARLK*	**415379**
21086-2464	*GARLK*	**415379**
21086-2464	*GARLK*	**415379**!
21086-2465	*GARLK*	**417205**!
21086-2466	*GARLK*	**417205**!*
21086-2467	*GARLK*	**417205**!
21086-2468	*GARLK*	**416339**
21086-2469	*GARLK*	**416339**
21086-2469	*GARLK*	455031!
21086-2470	*GARLK*	**416339***
21086-2474	*GARLK*	**415150**!*
21086-2475	*GARLK*	**415150**!*
21086-2476	*GARLK*	**415150**!*
21086-2477	*GARLK*	**416127**
21086-2480	*GARLK*	417503*
21086-2484	*GARLK*	**417504***
21086-2485	*GARLK*	**417504**
21086-2486	*GARLK*	**455032**!*
21086-2487	*GARLK*	**455032**!*
21086-2488	*GARLK*	**455032**!*
21086-2492	*GARLK*	**455189***
21086-2493	*GARLK*	**455189***
21086-2494	*GARLK*	**455189***
21086-2501	*GARLK*	**417211**!
21086-2502	*GARLK*	**417211**!*
21086-2503	*GARLK*	**417211**!
21086-2504	*GARLK*	**416345**!
21086-2505	*GARLK*	**416345**!
21086-2505	*GARLK*	455033
21086-2506	*GARLK*	**416345**!
21086-2506	*GARLK*	455033
21086-2507	*GARLK*	**415697**!
21086-2507	*GARLK*	455547
21086-2508	*GARLK*	**415697**!
21086-2508	*GARLK*	455547
21086-2509	*GARLK*	**415697**!
21086-2509	*GARLK*	455547
21086-2510	*GARLK*	**417366**!
21086-2511	*GARLK*	**417366**!*
21086-2512	*GARLK*	**417366**!*
21086-2513	*GARLK*	**415958**
21086-2513	*GARLK*	**415958**!
21086-2516	*GARLK*	**417505**
21086-2519	*GARLK*	**476470**!
21086-2519	*GARLK*	**476470**
21086-2520	*GARLK*	**415034**!
21086-2521	*GARLK*	**476470**!
21086-2521	*GARLK*	**476470**
21086-2525	*GARLK*	**455191***
21086-2527	*GARLK*	**455191***
21086-2528	*GARLK*	**415263**
21086-2529	*GARLK*	**415263***
21086-2530	*GARLK*	**415263***
21086-2531	*GARLK*	**417506***
21086-2532	*GARLK*	**417506**
21086-2533	*GARLK*	**417506***
21086-2537	*GARLK*	**415035**
21086-2538	*GARLK*	**415035**!
21086-2538	*GARLK*	**415035**
21086-2539	*GARLK*	**415035**!
21086-2540	*GARLK*	**417356**!
21086-2540	*GARLK*	455188
21086-2541	*GARLK*	**417356**!
21086-2541	*GARLK*	455188
21086-2542	*GARLK*	**417356**!
21086-2542	*GARLK*	455188
21086-2543	*GARLK*	**417357**
21086-2543	*GARLK*	455192!
21086-2544	*GARLK*	**417357**
21086-2544	*GARLK*	455192!
21086-2545	*GARLK*	**417357**
21086-2546	*GARLK*	**416130**!

! Industrial Size/Type * Minor Width Difference

= The U.S. customer service number is 877-4-TIMKEN. The Canadian customer service numbers are 800-565-4927 (English) and 800-565-0438 (French-Canadian).

Mfr. No.	Name	Zero Duplication or Recommended Industrial
21086-2547	GARLK	416130!*
21086-2548	GARLK	416130!*
21086-2549	GARLK	415036*
21086-2550	GARLK	415036
21086-2551	GARLK	415036*
21086-2552	GARLK	417507
21086-2553	GARLK	417507*
21086-2554	GARLK	417507*
21086-2555	GARLK	415041*
21086-2556	GARLK	415041
21086-2557	GARLK	415041*
21086-2561	GARLK	417509*
21086-2562	GARLK	417509*
21086-2563	GARLK	417509
21086-2567	GARLK	417223*
21086-2568	GARLK	417223
21086-2569	GARLK	417223*
21086-2573	GARLK	55193*=
21086-2574	GARLK	55193*=
21086-2575	GARLK	55193*=
21086-2579	GARLK	455037*
21086-2580	GARLK	455037
21086-2581	GARLK	455037*
21086-2600	GARLK	417511
21086-2601	GARLK	417511*
21086-2602	GARLK	417511
21086-2603	GARLK	415142*
21086-2604	GARLK	415142*
21086-2605	GARLK	415142*
21086-2609	GARLK	417512*
21086-2610	GARLK	417512
21086-2611	GARLK	417512*
21086-2615	GARLK	415043*
21086-2616	GARLK	415043
21086-2617	GARLK	415043*
21086-2621	GARLK	455203*
21086-2622	GARLK	455203*
21086-2623	GARLK	455203
21086-2627	GARLK	455056*
21086-2628	GARLK	455056
21086-2629	GARLK	455056*
21086-2630	GARLK	455194*
21086-2631	GARLK	455194*
21086-2632	GARLK	455194*
21086-2636	GARLK	417513*
21086-2637	GARLK	417513
21086-2638	GARLK	417513*
21086-2642	GARLK	417514*
21086-2643	GARLK	417514
21086-2644	GARLK	417514*
21086-2648	GARLK	417515*
21086-2654	GARLK	417516
21086-2655	GARLK	417516
21086-2656	GARLK	417516*
21086-2657	GARLK	472157!
21086-2657	GARLK	472157
21086-2658	GARLK	472157!
21086-2658	GARLK	472157
21086-2659	GARLK	416556!
21086-2659	GARLK	472157
21086-2660	GARLK	415196!
21086-2661	GARLK	415196!*
21086-2662	GARLK	415196!*
21086-2663	GARLK	416891!
21086-2664	GARLK	416891!
21086-2665	GARLK	416891!*
21086-2666	GARLK	416135!
21086-2669	GARLK	415045!*
21086-2670	GARLK	415045!
21086-2671	GARLK	415045!*
21086-2675	GARLK	416137*
21086-2676	GARLK	416137*
21086-2677	GARLK	416137
21086-2678	GARLK	417518*
21086-2679	GARLK	417518*
21086-2680	GARLK	417518
21086-2681	GARLK	415058*
21086-2682	GARLK	415058
21086-2683	GARLK	415058*
21086-2684	GARLK	456141
21086-2687	GARLK	455197N*
21086-2688	GARLK	455197N
21086-2689	GARLK	455197N*
21086-2693	GARLK	417520*
21086-2694	GARLK	417520
21086-2695	GARLK	417520*
21086-2699	GARLK	416144*
21086-2700	GARLK	416144*
21086-2701	GARLK	416144
21086-2705	GARLK	417238
21086-2711	GARLK	415196!*
21086-2712	GARLK	415196!
21086-2713	GARLK	415196!*
21086-2717	GARLK	415047*
21086-2718	GARLK	415047
21086-2719	GARLK	415047*
21086-2723	GARLK	416149*
21086-2724	GARLK	416149*
21086-2725	GARLK	416149
21086-2726	GARLK	417522
21086-2729	GARLK	415060*
21086-2729	GARLK	455060*
21086-2730	GARLK	415060
21086-2730	GARLK	455060
21086-2731	GARLK	415060*
21086-2731	GARLK	455060*
21086-2732	GARLK	55199*=
21086-2733	GARLK	55199=
21086-2734	GARLK	55199*=
21086-2738	GARLK	417525*
21086-2739	GARLK	417525
21086-2740	GARLK	417525*
21086-2744	GARLK	417526*
21086-2745	GARLK	417526*
21086-2746	GARLK	417526
21086-2750	GARLK	415351!*
21086-2751	GARLK	415351!
21086-2752	GARLK	415351!*
21086-2753	GARLK	416888!
21086-2754	GARLK	416888!
21086-2755	GARLK	416888!
21086-2756	GARLK	416153!
21086-2757	GARLK	416153!
21086-2758	GARLK	416153!
21086-2759	GARLK	416892!
21086-2760	GARLK	416892!
21086-2761	GARLK	416892!*
21086-2762	GARLK	417531
21086-2765	GARLK	416154!*
21086-2766	GARLK	416154!*
21086-2767	GARLK	416154!
21086-2768	GARLK	416070
21086-2769	GARLK	416070
21086-2770	GARLK	416070*
21086-2771	GARLK	415351!
21086-2772	GARLK	415351!
21086-2773	GARLK	415351!
21086-2774	GARLK	417532*
21086-2775	GARLK	417532*
21086-2776	GARLK	417532
21086-2780	GARLK	417533*
21086-2781	GARLK	417533
21086-2782	GARLK	417533*
21086-2786	GARLK	417534*
21086-2787	GARLK	417534*
21086-2788	GARLK	417534
21086-2792	GARLK	457585*
21086-2798	GARLK	416156
21086-2799	GARLK	416156
21086-2801	GARLK	415371
21086-2802	GARLK	415371
21086-2803	GARLK	415371*
21086-2804	GARLK	455685*
21086-2805	GARLK	455685*
21086-2806	GARLK	455685
21086-2807	GARLK	416158*
21086-2808	GARLK	416158*
21086-2809	GARLK	416158
21086-2813	GARLK	415064*
21086-2814	GARLK	415064
21086-2815	GARLK	415064*
21086-2819	GARLK	415284*
21086-2820	GARLK	415284
21086-2821	GARLK	415284*
21086-2825	GARLK	417535
21086-2826	GARLK	417535*
21086-2827	GARLK	417535
21086-2831	GARLK	417536
21086-2832	GARLK	417536
21086-2833	GARLK	417536*
21086-2834	GARLK	417537
21086-2835	GARLK	417537*
21086-2836	GARLK	417537
21086-2837	GARLK	415138!*
21086-2838	GARLK	415138!
21086-2839	GARLK	415138!*
21086-2840	GARLK	417538*
21086-2842	GARLK	417538
21086-2843	GARLK	417247!
21086-2844	GARLK	417247!*
21086-2845	GARLK	417247!
21086-2846	GARLK	417252*
21086-2847	GARLK	417252*
21086-2848	GARLK	417252
21086-2849	GARLK	415066*
21086-2850	GARLK	415066
21086-2851	GARLK	415066*
21086-2858	GARLK	416163*
21086-2859	GARLK	416163*
21086-2860	GARLK	416163
21086-2864	GARLK	456890
21086-2865	GARLK	456890
21086-2866	GARLK	456890
21086-2873	GARLK	416167!
21086-2874	GARLK	416167!
21086-2875	GARLK	416167!
21086-2876	GARLK	417267*
21086-2877	GARLK	417267*
21086-2878	GARLK	417267
21086-2879	GARLK	417269!
21086-2880	GARLK	417269!
21086-2881	GARLK	417269!
21086-2894	GARLK	417539!*
21086-2900	GARLK	417273*
21086-2901	GARLK	417273
21086-2902	GARLK	417273*
21086-2903	GARLK	417540*
21086-2904	GARLK	417540*
21086-2905	GARLK	417540
21086-2915	GARLK	415725!
21086-2916	GARLK	415725!*
21086-2917	GARLK	415725!
21086-2918	GARLK	417584*
21086-2921	GARLK	416865!
21086-2922	GARLK	416865!
21086-2923	GARLK	416865!
21086-2924	GARLK	417278
21086-2926	GARLK	417278
21086-2927	GARLK	417541
21086-2928	GARLK	417541*
21086-2929	GARLK	417541
21086-2933	GARLK	417542*
21086-2934	GARLK	417542*
21086-2935	GARLK	417542
21086-2936	GARLK	417543*
21086-2937	GARLK	417543*
21086-2938	GARLK	417543
21086-2941	GARLK	417544
21086-2951	GARLK	417545*
21086-2960	GARLK	455290*
21086-2961	GARLK	455290*
21086-2962	GARLK	455290
21086-2990	GARLK	416557
21086-2992	GARLK	416557
21086-2993	GARLK	417258*
21086-2996	GARLK	417546!*
21086-2997	GARLK	417546!*
21086-2998	GARLK	417546!
21086-2999	GARLK	417547*
21086-3000	GARLK	417547*
21086-3001	GARLK	417547
21086-3030	GARLK	417548
21086-3032	GARLK	417548*
21086-3033	GARLK	417548*
21086-3034	GARLK	417548
21086-3059	GARLK	417262!
21086-3060	GARLK	417262!
21086-3061	GARLK	417262!
21086-3062	GARLK	417358
21086-3065	GARLK	415645!
21086-3065	GARLK	455104
21086-3066	GARLK	415645!
21086-3066	GARLK	455104
21086-3067	GARLK	415645!
21086-3067	GARLK	455104
21086-3068	GARLK	417359
21086-3070	GARLK	417359
21086-3071	GARLK	417549!*
21086-3095	GARLK	417550
21086-3096	GARLK	417550*
21086-3097	GARLK	417550
21086-3122	GARLK	417551
21086-3123	GARLK	417551*
21086-3124	GARLK	417551
21086-3125	GARLK	455576!
21086-3126	GARLK	455576!*
21086-3127	GARLK	455576!
21086-3128	GARLK	415938*
21086-3129	GARLK	415938*
21086-3130	GARLK	415938
21086-3131	GARLK	417554!*
21086-3132	GARLK	417554!*
21086-3133	GARLK	417554!
21086-3155	GARLK	55357*
21086-3156	GARLK	55357*
21086-3157	GARLK	55357
21086-3176	GARLK	417254*
21086-3177	GARLK	417254*
21086-3178	GARLK	417254
21086-3179	GARLK	417360
21086-3180	GARLK	417360
21086-3181	GARLK	417360
21086-3182	GARLK	416107!
21086-3183	GARLK	416107!
21086-3183	GARLK	455073
21086-3184	GARLK	416107!
21086-3184	GARLK	455073
21086-3185	GARLK	417361

! Industrial Size/Type * Minor Width Difference

= The U.S. customer service number is 877-4-TIMKEN. The Canadian customer service numbers are 800-565-4927 (English) and 800-565-0438 (French-Canadian).

Mfr. No.	Name	Zero Duplication or Recommended Industrial
21086-3190	GARLK	415610
21086-3200	GARLK	**456192**
21086-3215	GARLK	55358=
21086-3216	GARLK	55358=
21086-3217	GARLK	55358=
21086-3228	GARLK	**417555!***
21086-3229	GARLK	**417555!***
21086-3230	GARLK	**417555!**
21086-3234	GARLK	**417556***
21086-3235	GARLK	**416288!***
21086-3236	GARLK	**417556**
21086-3240	GARLK	**417040**
21086-3249	GARLK	456199=
21086-3275	GARLK	**417362!***
21086-3276	GARLK	**417362!***
21086-3277	GARLK	**417362!**
21086-3278	GARLK	417363
21086-3281	GARLK	**416666***
21086-3282	GARLK	**416666***
21086-3283	GARLK	**416666**
21086-3284	GARLK	417364
21086-3293	GARLK	**416039**
21086-3296	GARLK	**416039**
21086-3322	GARLK	**416476!**
21086-3323	GARLK	**416476!**
21086-3324	GARLK	**416476!**
21086-3331	GARLK	**455297***
21086-3332	GARLK	**455297**
21086-3333	GARLK	**455297***
21086-3347	GARLK	417780*
21086-3348	GARLK	417780
21086-3349	GARLK	417780*
21086-3355	GARLK	**415683**
21086-3356	GARLK	**415683***
21086-3357	GARLK	**415683***
21086-3358	GARLK	**417365**
21086-3359	GARLK	**417365**
21086-3360	GARLK	**417365**
21086-3367	GARLK	**415072***
21086-3368	GARLK	**415072**
21086-3369	GARLK	**415072***
21086-3370	GARLK	**415072***
21086-3375	GARLK	**455330!***
21086-3376	GARLK	**455330!***
21086-3377	GARLK	**455330!**
21086-3384	GARLK	**415074***
21086-3385	GARLK	**415074**
21086-3386	GARLK	**415074***
21086-3387	GARLK	**415074***
21086-3394	GARLK	**455480!***
21086-3395	GARLK	**455480!**
21086-3396	GARLK	**455480!***
21086-3397	GARLK	**455480!***
21086-3398	GARLK	55316*=
21086-3399	GARLK	55316*=
21086-3400	GARLK	55316*=
21086-3401	GARLK	55316=
21086-3402	GARLK	**417562***
21086-3403	GARLK	**417562***
21086-3404	GARLK	**417562***
21086-3405	GARLK	**417562***
21086-3406	GARLK	55692*=
21086-3407	GARLK	55692*=
21086-3408	GARLK	55692=
21086-3417	GARLK	55242*
21086-3418	GARLK	55242*
21086-3419	GARLK	55242*
21086-3420	GARLK	55242
21086-3421	GARLK	**417563***
21086-3422	GARLK	**417563***
21086-3423	GARLK	**417563***
21086-3424	GARLK	**417563**
21086-3426	GARLK	**415294!**
21086-3427	GARLK	**415294!**
21086-3434	GARLK	**416229***
21086-3435	GARLK	**416229**
21086-3444	GARLK	**417298***
21086-3445	GARLK	**417298**
21086-3460	GARLK	**415327***
21086-3461	GARLK	**415327**
21086-3464	GARLK	**417596**
21086-3465	GARLK	**417596**
21086-3474	GARLK	**455948**
21086-3482	GARLK	**455584**
21086-3483	GARLK	**455584**
21086-3492	GARLK	**416364!**
21086-3493	GARLK	**416364!**
21086-3496	GARLK	**417597***
21086-3497	GARLK	**417597**
21086-3500	GARLK	**416239!**
21086-3501	GARLK	**416239!**
21086-3504	GARLK	417564*
21086-3505	GARLK	417564
21086-3514	GARLK	**416077***
21086-3515	GARLK	**416077**
21086-3518	GARLK	**416044**
21086-3519	GARLK	**416044**
21086-3526	GARLK	**415116***
21086-3527	GARLK	**415116**
21086-3536	GARLK	**455117***
21086-3537	GARLK	**455117**
21086-3538	GARLK	415317*
21086-3539	GARLK	415317
21086-3544	GARLK	**415867***
21086-3545	GARLK	**415867**
21086-3552	GARLK	**415551***
21086-3553	GARLK	**415551**
21086-3557	GARLK	**415116**
21086-3558	GARLK	416102
21086-3566	GARLK	**417598***
21086-3567	GARLK	**417598**
21086-3574	GARLK	457299
21086-3578	GARLK	**455406!***
21086-3579	GARLK	**455406!**
21086-3582	GARLK	455397
21086-3583	GARLK	455397
21086-3588	GARLK	**455121***
21086-3589	GARLK	**455121**
21086-3593	GARLK	415656
21086-3596	GARLK	**417600***
21086-3597	GARLK	**417600**
21086-3600	GARLK	**417601***
21086-3601	GARLK	**417601**
21086-3602	GARLK	**417602!***
21086-3607	GARLK	**415124***
21086-3609	GARLK	**417022***
21086-3610	GARLK	**417604***
21086-3611	GARLK	**417567***
21086-3613	GARLK	**415128***
21086-3614	GARLK	455129*
21086-3615	GARLK	**55301S**
21086-3617	GARLK	455476
21086-3618	GARLK	**456462**
21086-3619	GARLK	**455462**
21086-3623	GARLK	**415090**
21086-3624	GARLK	**415090***
21086-3627	GARLK	55218=
21086-3633	GARLK	**415219***
21086-3634	GARLK	415871
21086-3646	GARLK	**417606***
21086-3648	GARLK	**417606**
21086-3649	GARLK	55222=
21086-3652	GARLK	55239=
21086-3654	GARLK	55078S
21086-3655	GARLK	55223=
21086-3656	GARLK	55224=
21086-3660	GARLK	**417605**
21086-3662	GARLK	456483=
21086-3670	GARLK	456483=
21086-3673	GARLK	**417020**
21086-3676	GARLK	**417570***
21086-3677	GARLK	**417570**
21086-3680	GARLK	**415227!**
21086-3687	GARLK	55228*=
21086-3688	GARLK	55228*=
21086-3689	GARLK	55228=
21086-3694	GARLK	**415482**
21086-3705	GARLK	**415076***
21086-3737	GARLK	55103S
21086-3775	GARLK	**455330!**
21086-3924	GARLK	**417602!***
21086-3925	GARLK	**417602!**
21086-3932	GARLK	**455123***
21086-3937	GARLK	**417603!**
21086-3945	GARLK	**417567**
21086-3949	GARLK	455966
21086-3951	GARLK	**415128**
21086-3954	GARLK	**455462**
21086-3965	GARLK	416257
21086-3967	GARLK	**415219**
21086-3975	GARLK	415871
21086-3984	GARLK	**417606**
21086-3989	GARLK	55223*=
21086-3996	GARLK	**417020***
21086-3998	GARLK	**417020***
21086-4016	GARLK	**415227!***
21086-4030	GARLK	55228*=
21086-4057	GARLK	**415077***
21086-4058	GARLK	**415077**
21086-4059	GARLK	**415077***
21086-4062	GARLK	**415076**
21086-4184	GARLK	55103S
21086-4502	GARLK	**417603!***
21086-4503	GARLK	417940!
21086-4503	GARLK	**55301S***
21086-4505	GARLK	455476*
21086-4506	GARLK	**456462**
21086-4507	GARLK	**455462***
21086-4515	GARLK	55239*=
21086-4517	GARLK	55078S*
21086-4526	GARLK	55228*=
21086-4587	GARLK	**416394**
21086-4929R1	GARLK	**417606**
21086-4966F1	GARLK	**417247!**
21086-4991R1	GARLK	**415294!**
21086-5049R1	GARLK	**415034!**
21086-5201F1	GARLK	**417211!**
21086-5280F1	GARLK	**415036**
21086-5319F1	GARLK	**417492**
21086-5332F1	GARLK	416321
21086-5492F1	GARLK	**415041**
21086-5512F1	GARLK	**476470!**
21086-5512F1	GARLK	**476470**
21086-5646F1	GARLK	**416125!**
21086-5683F1	GARLK	**417603!**
21086-5831F1	GARLK	**416888!**
21086-5923F1	GARLK	415610
21086-5949R1	GARLK	**415090**
21086-6089R1	GARLK	**416077**
21086-6146R1	GARLK	**415074**
21086-6433	GARLK	**416364!**
21086-6433F1	GARLK	**416364!**
21086-6434R1	GARLK	**417357**
21086-6435	GARLK	**415962**
21086-6437F1	GARLK	**416239!**
21086-6484F1	GARLK	**476470**
21086-6484F1	GARLK	**476470!**
21086-6590F1	GARLK	**416332!**
21086-6603F1	GARLK	**415725!**
21086-6661F1	GARLK	**417600**
21086-6711R1	GARLK	**415725!**
21086-6760F1	GARLK	**417603!**
21086-6872R1	GARLK	**417362!**
21086-6891F1	GARLK	**416239!**
21086-6920F1	GARLK	**415294!**
21086-6978F1	GARLK	**416380!**
21086-7115F1	GARLK	**415991!**
21086-7115F1	GARLK	**415991**
21086-7151F1	GARLK	**415645!**
21086-7155F1	GARLK	**415072**
21086-7233F1	GARLK	**415551**
21086-7289F1	GARLK	**417191**
21086-7402F1	GARLK	**415088**
21086-7433F1	GARLK	**415072**
21086-7433R1	GARLK	**415072**
21086-7436F1	GARLK	**415327**
21086-7448F1	GARLK	**415036**
21086-7670F1	GARLK	**476470!**
21086-7670F1	GARLK	**476470**
21086-7673F1	GARLK	**417020**
21086-7686F1	GARLK	**415041**
21086-7880F1	GARLK	416556!
21086-7880F1	GARLK	**472157**
21086-7909F1	GARLK	**417606**
21086-7953	GARLK	**415577***
21086-7973	GARLK	55329*=
21086-8149F1	GARLK	**415294!**
21086-8216F1	GARLK	**415327**
21086-8306F1	GARLK	**416107!**
21086-8311F1	GARLK	**415437**
21086-8319F1	GARLK	416321
21086-8531F1	GARLK	416670
21086-8663R1	GARLK	**417541**
21086-8683F1	GARLK	**417511**
21086-8932R1	GARLK	**415725!**
21086-8996F1	GARLK	**416154!**
21086-9209F1	GARLK	**412473!**
21086-9347F1	GARLK	**416158**
21086-9401R1	GARLK	**417355!**
21086-9664R1	GARLK	**417596**
21086-9724	GARLK	**417487**
21086-9780	GARLK	**415294!**
210862192	GARLK	**416370!**
21087	C-R	**470898!**
2108730	CLARK	370030A
21088	C-R	**470898!**
2108BG	SPG	**455655**
21091	C-R	**470898***
21092	C-R	40566S
21093	C-R	40566S
2109451	GRAM	450398
2109451	GRAM	**471267!**
21095	C-R	**470898=**
21095	C-R	**470898**
21096	C-R	**470898**
2109665	CLARK	**471272!**
21097	C-R	40566S
210972	CUMMI	J1126
21098	C-R	**470898***
21099	C-R	**470898!**
2109BG	SPG	2109
210VB7	MARI	**415449!**
210X240X15	SIMRT	210X240X15
210X240X15SC	TRSCM	210X240X15
210X240X15TC	TRSCM	210X240X15
210X250X15	SIMRT	210X250X15
211	C-R	5117
211	THIOK	**473241**

! Industrial Size/Type * Minor Width Difference

= The U.S. customer service number is 877-4-TIMKEN. The Canadian customer service numbers are 800-565-4927 (English) and 800-565-0438 (French-Canadian).

Mfr. No.	Name	Zero Duplication or Recommended Industrial
211	UNIVE	**455151**
211-1013	ITM	413818
211-1015	ITM	494122
211-1016	ITM	2003N!
211-1018	ITM	474134
211-1029	ITM	2002
211-1033	ITM	1986
211-1034	ITM	334111
211-1039	ITM	1985
211-1040	ITM	1999
211-1041	ITM	223014
211-1044	ITM	1938
211-1047	ITM	1939
211-1051	ITM	1952
211-1052	ITM	1943
211-1055	ITM	494117
211-1577	ITM	**472397**!
211-2142	ITM	331227H
211-2171	ITM	1086=
211-2392	ITM	**470565**!
211-2410	ITM	**472164**!
211-2491	ITM	**471785**!
211-2494	ITM	2551
211-2625	ITM	**470898**
211-2696	ITM	**471870**!
211-2767	ITM	**470334**!
211-2787	ITM	**472258**!
211-2871	ITM	224015
211-3130	ITM	**473234**!
211-3131	ITM	64X80X8
211-3133	ITM	**470625**!
211-3141	ITM	1873
211-3154	ITM	43076S
211-3156	ITM	**473241**
211-3233	ITM	**473234**!
211-3242	ITM	7399S!
211-3285	ITM	**473231**!
211-3331	ITM	224252
211-3447	ITM	223620
211-3491	ITM	35X47X7
211-3494	ITM	340823
211-3496	ITM	35X47X7
211-3498	ITM	**471224**!
211-3507	ITM	223535
211-3509	ITM	**473228**
211-3511	ITM	**471192**
211-3580	ITM	**472492**!
211-3640	ITM	**471646**!
211-3655	ITM	239145
211-3772	ITM	**471692**!
211-3835	ITM	**471737**
211-3952	ITM	**470487**!
211-3971	ITM	**472258**!
211-3996	ITM	**472492**!
211-405-641B	VW	1967
211-405-641D	VW	1209
211-4070	ITM	1110
211-4152	ITM	1110
211-4531	ITM	1974
211-4535	ITM	3771
211-4555	ITM	2326=
211-4576	ITM	**471835**!
211-4588	ITM	355200
211-4588	ITM	**416888**!
211-4609	ITM	**471652**
211-4746	ITM	1967
211-4748	ITM	1967
211-4765	ITM	**473454**
211-4782	ITM	**472324**!
211-4785	ITM	1177
211-4786	ITM	1960
211-4788	ITM	1176
211-4795	ITM	1959
211-4978	ITM	446927!
211-5016	ITM	**472164**!
211-6126	ITM	**350936**
211-6131	ITM	48X72X7!
211-6139	ITM	40322=
211-6140	ITM	239128
211-6149	ITM	1165
211-6158	ITM	**480630**!
211-6174	ITM	**472213**
211-6178	ITM	224025
211-6188	ITM	2642
211-6193	ITM	**472397**!
211-6232	ITM	9845
211-6301	ITM	1209
211-6302	ITM	1195
211-6305	ITM	48X72X7!
211-6318	ITM	**473230**!
211-6319	ITM	482126
211-6325	ITM	5697
211-6330	ITM	**471766**=
211-6332	ITM	1192
211-6360	ITM	224015
211-6369	ITM	5778
211-6375	ITM	1183
211-6377	ITM	1981
211-6378	ITM	1992
211-6430	ITM	1196
211-6432	ITM	2955
211-6441	ITM	221925
211-6454	ITM	**473573**
211-6465	ITM	228010
211-6466	ITM	227045
211-6471	ITM	1170
211-6472	ITM	32X58X8!
211-6500	ITM	473823
211-6512	ITM	**473237**!
211-6525	ITM	2551
211-6532	ITM	331227H
211-6534	ITM	1173
211-6535	ITM	5591
211-6536	ITM	1188
211-6538	ITM	1188
211-6586	ITM	3771
211-6599	ITM	1906
211-6671	ITM	1950
211-7200	ITM	**473237**!
211-7201	ITM	**473237**!
211-7506	ITM	1987
211-7507	ITM	1990
211-7513	ITM	**473258**
211-7521	ITM	1884
211-7529	ITM	413818
211-7530	ITM	1949
211-7539	ITM	224015
211-7540	ITM	1984
211-7547	ITM	444116
211-7548	ITM	225540
211-7550	ITM	1992
211-7599	ITM	225650
211-7628	ITM	1949
211-7649	ITM	5108
211-7650	ITM	5750
211-7673	ITM	**3395**!
211-7688	ITM	1906
211-7690	ITM	1906
211-7692	ITM	1952
211-7718	ITM	**3395**!
211-7774	ITM	223535
211-7903	ITM	1943
211-7904	ITM	3476
211-7915	ITM	227410
211-7916	ITM	3771
211-7917	ITM	3771
211-7923	ITM	1984
211-7950	ITM	1165
211-7951	ITM	1217
211-7954	ITM	1962
211-7956	ITM	473812
211-7957	ITM	**473179**!
211-7959	ITM	1959
211-7962	ITM	1952
211-7964	ITM	**473367**
211-7967	ITM	1960
211-7970	ITM	1959
211-7972	ITM	1974
211-7976	ITM	**473238**!
211-7987	ITM	1996
211-7989	ITM	482126
211-7994	ITM	3771
211-8135	ITM	223035
211-8284	ITM	225082
21100	C-R	**470898**
21101	C-R	40566S
2110147	GRAM	**471224**!
211017	TW-DI	**472397**!
21103	C-R	**470898**!
211035	WOOL	**480630**!
2110456	CLARK	**417544**
21105	C-R	**470898**!
2110554	GRAM	**471281**!
21106	C-R	**470898**!
21107	C-R	**470898**!
21108	C-R	**470898**
2110RC	SUL	**416892**!
21110	C-R	9599S
2111019	ITM	1955
2111019	ITM	52X65X9!
2111020	ITM	1955
2111020	ITM	52X65X9!
2111022	ITM	225110
2111022	ITM	51X65X7!
2111035	WOOL	455310
2111042	ITM	222510
2111042	ITM	25X35X7!
2111077	ITM	**1213N**
21111	C-R	2457
211110	C-R	**473421**
211111	C-R	473435
211112	BENDI	**415960**!
211112	C-R	**472287**!
21112	C-R	453066
21112	C-R	**470898**!
21113	C-R	6626S
21113	GARLK	**471652**
211132C92	IH	HU066A
2111398X	GRAM	**471763**
21114	GWI	**473016**!
211163	US-EL	**416404**!
211166	ALLCH	**450984**
21117	C-R	450177
21117	GARLK	**471692**!
21118	C-R	450177
21119	C-R	**473421**
21120	C-R	**470898**!
21121	C-R	42101S
2112199	ITM	224820
2112199	ITM	48X62X8!
21122	C-R	**473467**!
2112202	ITM	1994
2112202	ITM	48X70X9!
21123	C-R	**473467**!
2112328	ITM	1174
2112328	ITM	38X52X8.5!
2112398	ITM	**471192**
21125	C-R	**473467**!
21125	UNIVE	**481537**
211253	CUMMI	39807
21126	C-R	42101S
21128	GARLK	**470712**!
21131	C-R	**473467**!
21133	C-R	**473467**
211334	ALLCH	**472258**!
211335	ALLCH	**414268**!
21134	C-R	**473467***
21134	C-R	**473467**!
2113470	ITM	224045
2113470	ITM	40X62X12!
2113485	ITM	226020
2113485	ITM	60X80X8!
2113487	ITM	224045
2113487	ITM	40X62X12!
211351	CLARK	**417273**
2113560	ITM	239146
2113560	ITM	38X54X7!
21136	C-R	**473467***
21136	C-R	**473467**
21137	MICH	**481073**
21137	UNIVE	**481073***
21138	GARLK	**471763**
2113842	ITM	222510
2113842	ITM	25X35X7!
2113909	ITM	**471705**!
2113933	ITM	224820
2113933	ITM	48X62X8!
2113973	ITM	224520
2113973	ITM	45X60X10!
2113974	ITM	1973
2113974	ITM	48X65X10!
2113975	ITM	227040
2113975	ITM	70X90X10!
211401	ALLCH	**471466**!
21141	C-R	**473467**!
211416	CINMI	**473228**
21144	C-R	**473467**
211441	BRCWY	**470530**!
2114521	ITM	440131!
2114530	ITM	224820
2114530	ITM	48X62X8!
2114532	ITM	224045
2114532	ITM	40X62X12!
2114533	ITM	223542
2114533	ITM	35X55X11!
2114536	ITM	223555
2114536	ITM	35X64X8!
2114583	ITM	33X50X12!
2114618	GMC	**472179**
2114646	ITM	1012
2114646	ITM	1012N
2114747	ITM	224045
2114747	ITM	40X62X12!
2114777	ITM	2001
2114777	ITM	60X82X12!
2114780	ITM	223240
2114780	ITM	32X48X8!
2114781	ITM	223840
2114781	ITM	38X58X8!
2114784	ITM	223840
2114784	ITM	38X58X8!
2114789	ITM	1180
2114789	ITM	41X55X7!
2114797	ITM	55X82X12!
2114799	ITM	224560
2114799	ITM	45X68X7!
2114802	ITM	223542
2114802	ITM	35X55X11!

! Industrial Size/Type * Minor Width Difference

= The U.S. customer service number is 877-4-TIMKEN. The Canadian customer service numbers are 800-565-4927 (English) and 800-565-0438 (French-Canadian).

Mfr. No.	Name	Zero Duplication or Recommended Industrial
21149	*C-R*	**472015**!
21149	*LAU*	**481443**!
2114949	*ITM*	1214
2114949	*ITM*	1214N
2114954	*ITM*	224015
2114954	*ITM*	40X52X7!
21150	*C-R*	**472015**!
211501317	*VW*	1208
211501317	*VW*	48X72X7!
211501317A	*VW*	1208
211501317A	*VW*	48X72X7!
2115015	*GMC*	**472636**!
21151	*LAU*	**450040**
215265	*GMC*	**418028**
2115265	*GMC*	455137!
2115266	*GMC*	**472636**!
21153	*LAU*	**451583**!
21154	*LAU*	**480210**!
21155	*LAU*	**471255**!
21156	*C-R*	**472015**!
21158	*C-R*	**472015**!*
21158-0005	*GARLK*	**350364**
21158-0101	*GARLK*	**481073**
21158-0102	*GARLK*	**481073***
21158-0105	*GARLK*	**481397***
21158-0106	*GARLK*	**481397**
21158-0109	*GARLK*	**471529**
21158-0110	*GARLK*	**471529**
21158-0111	*GARLK*	**471538**!*
21158-0112	*GARLK*	**471538**!
21158-0113	*GARLK*	**471553**!
21158-0114	*GARLK*	**471553**!
21158-0115	*GARLK*	**471579**
21158-0116	*GARLK*	**471579***
21158-0119	*GARLK*	**471642**
21158-0124	*GARLK*	50026*
21158-0142	*GARLK*	**471554**!
21158-0143	*GARLK*	**471567**!
21158-0144	*GARLK*	**471567**!
21158-0145	*GARLK*	**471498***
21158-0146	*GARLK*	**471498**
21158-0147	*GARLK*	**471643**!
21158-0149	*GARLK*	**471684**!
21158-0150	*GARLK*	**471684**!
21158-0151	*GARLK*	450033*
21158-0152	*GARLK*	450033
21158-0153	*GARLK*	**470390***
21158-0155	*GARLK*	473407*
21158-0156	*GARLK*	473407
21158-0157	*GARLK*	**470601**
21158-0158	*GARLK*	**470601**
21158-0159	*GARLK*	**481443**!
21158-0160	*GARLK*	**481443**!*
21158-0161	*GARLK*	**481568**!
21158-0162	*GARLK*	**481443**!
21158-0165	*GARLK*	**481644**
21158-0166	*GARLK*	**481644***
21158-0167	*GARLK*	471337
21158-0171	*GARLK*	451739=
21158-0172	*GARLK*	451739=
21158-0175	*GARLK*	**471539**!
21158-0176	*GARLK*	**471539**!
21158-0177	*GARLK*	**471231**!
21158-0178	*GARLK*	**471231**!
21158-0179	*GARLK*	**474253**!
21158-0180	*GARLK*	**474253**!
21158-0181	*GARLK*	**450588**!
21158-0183	*GARLK*	**471645**
21158-0185	*GARLK*	471686
21158-0187	*GARLK*	473412*
21158-0189	*GARLK*	471729*
21158-0193	*GARLK*	**472452**
21158-0195	*GARLK*	473414*
21158-0199	*GARLK*	473414*
21158-0203	*GARLK*	**473415***
21158-0204	*GARLK*	**473415**
21158-0213	*GARLK*	**471267**!
21158-0215	*GARLK*	**471570**!
21158-0216	*GARLK*	**471570**!*
21158-0217	*GARLK*	**471633**!*
21158-0218	*GARLK*	**471633**!
21158-0219	*GARLK*	**471646**!
21158-0221	*GARLK*	**470590***
21158-0222	*GARLK*	**470590**
21158-0223	*GARLK*	**471137***
21158-0224	*GARLK*	**471137**
21158-0225	*GARLK*	**471730***
21158-0226	*GARLK*	**471730**
21158-0227	*GARLK*	481741=
21158-0228	*GARLK*	481741=
21158-0229	*GARLK*	470645*
21158-0237	*GARLK*	482371=
21158-0241	*GARLK*	450038*
21158-0251	*GARLK*	**471571**
21158-0252	*GARLK*	**471571***
21158-0255	*GARLK*	**471647***
21158-0256	*GARLK*	**471647***
21158-0257	*GARLK*	472951
21158-0257	*GARLK*	**474252**
21158-0258	*GARLK*	472951
21158-0258	*GARLK*	**474252**
21158-0259	*GARLK*	**450039***
21158-0260	*GARLK*	**450039**
21158-0261	*GARLK*	**450039**
21158-0269	*GARLK*	**451583**!
21158-0270	*GARLK*	**451583**!
21158-0271	*GARLK*	450545*
21158-0273	*GARLK*	**471648***
21158-0274	*GARLK*	**471648***
21158-0275	*GARLK*	**471688**
21158-0276	*GARLK*	**471688**
21158-0277	*GARLK*	**450040***
21158-0278	*GARLK*	**450040**
21158-0279	*GARLK*	**451082***
21158-0285	*GARLK*	**450339***
21158-0286	*GARLK*	**450339**
21158-0288	*GARLK*	**471224**!
21158-0289	*GARLK*	**473380***
21158-0290	*GARLK*	**473380**
21158-0291	*GARLK*	**471649**!
21158-0292	*GARLK*	**471649**!
21158-0293	*GARLK*	**471689**!
21158-0295	*GARLK*	**450593***
21158-0295	*GARLK*	**450593**!*
21158-0297	*GARLK*	**471733***
21158-0298	*GARLK*	**471733**
21158-0299	*GARLK*	**471744**!*
21158-0300	*GARLK*	**471744**!
21158-0301	*GARLK*	**471760***
21158-0302	*GARLK*	**471760**
21158-0303	*GARLK*	**471619**!
21158-0304	*GARLK*	**471619**!
21158-0305	*GARLK*	**471076**
21158-0306	*GARLK*	**471076**
21158-0307	*GARLK*	481650
21158-0308	*GARLK*	481650*
21158-0323	*GARLK*	**471651**
21158-0324	*GARLK*	**471651***
21158-0325	*GARLK*	**471705**!
21158-0326	*GARLK*	**471705**!
21158-0327	*GARLK*	**473419**
21158-0328	*GARLK*	**473419**
21158-0329	*GARLK*	**471735***
21158-0330	*GARLK*	**471735**
21158-0331	*GARLK*	**450342**
21158-0333	*GARLK*	**471762**!
21158-0334	*GARLK*	**471762**!
21158-0335	*GARLK*	**473420***
21158-0336	*GARLK*	**473420**
21158-0341	*GARLK*	450044*
21158-0347	*GARLK*	450159*
21158-0353	*GARLK*	**471692**!
21158-0354	*GARLK*	**471692**!
21158-0355	*GARLK*	**476838**!
21158-0356	*GARLK*	**476838**!
21158-0359	*GARLK*	**471763***
21158-0360	*GARLK*	**471763**
21158-0363	*GARLK*	**471736**
21158-0365	*GARLK*	473428*
21158-0367	*GARLK*	**471764**!
21158-0369	*GARLK*	**473427***
21158-0370	*GARLK*	**473427**
21158-0374	*GARLK*	**450362***
21158-0377	*GARLK*	450600=
21158-0383	*GARLK*	**472475***
21158-0384	*GARLK*	**472475**
21158-0385	*GARLK*	**473426***
21158-0386	*GARLK*	**473426**
21158-0389	*GARLK*	**471354**!*
21158-0390	*GARLK*	**471354**!
21158-0403	*GARLK*	**450048***
21158-0405	*GARLK*	**450173***
21158-0427	*GARLK*	**471766**!
21158-0428	*GARLK*	**471766**!
21158-0433	*GARLK*	450177*
21158-0442	*GARLK*	**471808**!*
21158-0443	*GARLK*	**471808**!*
21158-0444	*GARLK*	**471808**!
21158-0445	*GARLK*	**471818***
21158-0446	*GARLK*	**471818***
21158-0447	*GARLK*	**471818***
21158-0448	*GARLK*	470050*
21158-0451	*GARLK*	**473424**!*
21158-0454	*GARLK*	450124=
21158-0482	*GARLK*	**473210**
21158-0487	*GARLK*	**473421***
21158-0490	*GARLK*	**473211**!*
21158-0491	*GARLK*	**473211**!
21158-0492	*GARLK*	**473211**!*
21158-0493	*GARLK*	**473212**!*
21158-0494	*GARLK*	**473212**!*
21158-0495	*GARLK*	**473212**!
21158-0496	*GARLK*	**473213**!
21158-0497	*GARLK*	**473213**!
21158-0498	*GARLK*	**473213**!
21158-0499	*GARLK*	450503*=
21158-0505	*GARLK*	481834
21158-0507	*GARLK*	481834
21158-0511	*GARLK*	473435*
21158-0514	*GARLK*	473436*
21158-0517	*GARLK*	50168*
21158-0520	*GARLK*	450054*
21158-0535	*GARLK*	**470774**!
21158-0536	*GARLK*	**470774**!
21158-0537	*GARLK*	**470774**!
21158-0538	*GARLK*	**472287**!*
21158-0539	*GARLK*	**472287**!*
21158-0544	*GARLK*	**473214**!
21158-0545	*GARLK*	**473214**!
21158-0546	*GARLK*	**473214**!
21158-0547	*GARLK*	**473215**!*
21158-0548	*GARLK*	**473215**!*
21158-0549	*GARLK*	**473215**!
21158-0550	*GARLK*	470950!
21158-0550	*GARLK*	6241S
21158-0551	*GARLK*	470950!
21158-0551	*GARLK*	6241S
21158-0552	*GARLK*	470950!
21158-0552	*GARLK*	6241S
21158-0556	*GARLK*	**471835**!
21158-0557	*GARLK*	**471835**!
21158-0559	*GARLK*	**472843***
21158-0566	*GARLK*	50126
21158-0574	*GARLK*	50254*=
21158-0592	*GARLK*	**473224**!*
21158-0593	*GARLK*	**473224**!
21158-0594	*GARLK*	**473224**!*
21158-0595	*GARLK*	**473016**!*
21158-0596	*GARLK*	**473016**!*
21158-0597	*GARLK*	**473016**!
21158-0599	*GARLK*	**473225**!*
21158-0600	*GARLK*	**473225**!
21158-0601	*GARLK*	**474264**
21158-0602	*GARLK*	**474264**
21158-0603	*GARLK*	**474264**
21158-0607	*GARLK*	**473226***
21158-0608	*GARLK*	**473226***
21158-0609	*GARLK*	**473226**
21158-0610	*GARLK*	473437*
21158-0612	*GARLK*	473437
21158-0613	*GARLK*	**471862**
21158-0615	*GARLK*	**471862**
21158-0619	*GARLK*	**473438***
21158-0621	*GARLK*	**473438**
21158-0622	*GARLK*	**473439**!*
21158-0624	*GARLK*	**473439**!*
21158-0643	*GARLK*	**470625**!
21158-0644	*GARLK*	**470625**!
21158-0645	*GARLK*	**470625**!
21158-0649	*GARLK*	**471820***
21158-0650	*GARLK*	**471820***
21158-0655	*GARLK*	**473228**
21158-0656	*GARLK*	**473228**
21158-0657	*GARLK*	**473228**
21158-0658	*GARLK*	**451857***
21158-0659	*GARLK*	**451857***
21158-0660	*GARLK*	**451857**
21158-0664	*GARLK*	**473440**!*
21158-0665	*GARLK*	**473440**!*
21158-0666	*GARLK*	**473440**!
21158-0668	*GARLK*	**474281**!
21158-0669	*GARLK*	**474281**!
21158-0670	*GARLK*	**470625**!
21158-0700	*GARLK*	**472213**
21158-0701	*GARLK*	**472213**
21158-0702	*GARLK*	**472213**
21158-0703	*GARLK*	**472299***
21158-0704	*GARLK*	**472299***
21158-0706	*GARLK*	**471821**!
21158-0707	*GARLK*	**471821**!
21158-0708	*GARLK*	**471821**!
21158-0712	*GARLK*	**473229**
21158-0713	*GARLK*	**473229**
21158-0714	*GARLK*	**473229**
21158-0715	*GARLK*	**470682***
21158-0717	*GARLK*	**470682**
21158-0718	*GARLK*	**471316**
21158-0721	*GARLK*	**473441***
21158-0723	*GARLK*	**473441**
21158-0724	*GARLK*	**450273**
21158-0733	*GARLK*	**450065***
21158-0734	*GARLK*	**450065**
21158-0739	*GARLK*	**482253***
21158-0742	*GARLK*	451469*
21158-0744	*GARLK*	451469
21158-0751	*GARLK*	450274
21158-0760	*GARLK*	**473231**
21158-0761	*GARLK*	**473231**

! Industrial Size/Type * Minor Width Difference

= The U.S. customer service number is 877-4-TIMKEN. The Canadian customer service numbers are 800-565-4927 (English) and 800-565-0438 (French-Canadian).

Mfr. No.	Name	Zero Duplication or Recommended Industrial
21158-0762	GARLK	473231
21158-0763	GARLK	473367
21158-0763	GARLK	473367!
21158-0764	GARLK	473367!
21158-0764	GARLK	473367
21158-0765	GARLK	473367!
21158-0765	GARLK	473367
21158-0769	GARLK	473010
21158-0771	GARLK	473010
21158-0772	GARLK	473232
21158-0774	GARLK	473232
21158-0775	GARLK	481864
21158-0777	GARLK	481864
21158-0781	GARLK	450275
21158-0782	GARLK	450275
21158-0783	GARLK	450275
21158-0787	GARLK	473444
21158-0788	GARLK	473444
21158-0789	GARLK	473444
21158-0790	GARLK	473231
21158-0792	GARLK	473231
21158-0793	GARLK	473367!
21158-0793	GARLK	473367
21158-0799	GARLK	450260*
21158-0805	GARLK	450073*
21158-0808	GARLK	450284=
21158-0810	GARLK	450284=
21158-0820	GARLK	450415*
21158-0826	GARLK	473233!
21158-0827	GARLK	473233!
21158-0828	GARLK	473233!
21158-0829	GARLK	473445*
21158-0835	GARLK	473234
21158-0836	GARLK	473234
21158-0837	GARLK	473234
21158-0838	GARLK	473235!*
21158-0840	GARLK	473235!
21158-0841	GARLK	474265
21158-0842	GARLK	474265
21158-0843	GARLK	474265
21158-0844	GARLK	473236!*
21158-0845	GARLK	473236!*
21158-0846	GARLK	473236!
21158-0853	GARLK	473446
21158-0854	GARLK	473446
21158-0855	GARLK	473446*
21158-0859	GARLK	471981
21158-0861	GARLK	471981
21158-0862	GARLK	50327
21158-0871	GARLK	450068*
21158-0874	GARLK	50075*=
21158-0877	GARLK	50191*
21158-0886	GARLK	50081*
21158-0887	GARLK	50081*
21158-0895	GARLK	470086*
21158-0898	GARLK	471504!
21158-0899	GARLK	471504!
21158-0900	GARLK	471504!
21158-0904	GARLK	472164!
21158-0905	GARLK	472164*
21158-0906	GARLK	472164!
21158-0907	GARLK	472185!
21158-0909	GARLK	472185!
21158-0910	GARLK	470334!
21158-0911	GARLK	470334!
21158-0912	GARLK	470334!
21158-0913	GARLK	472179
21158-0914	GARLK	472179
21158-0915	GARLK	472179
21158-0916	GARLK	473447
21158-0918	GARLK	473447
21158-0919	GARLK	470334!
21158-0919	GARLK	50289
21158-0921	GARLK	470334!
21158-0921	GARLK	50289
21158-0922	GARLK	471141!
21158-0923	GARLK	471141!
21158-0924	GARLK	471141!
21158-0925	GARLK	473448
21158-0927	GARLK	473448
21158-0928	GARLK	471984*
21158-0930	GARLK	471984
21158-0931	GARLK	473313
21158-0933	GARLK	473313
21158-0940	GARLK	50266*
21158-0943	GARLK	450269*
21158-0946	GARLK	450285*
21158-0949	GARLK	471866!*
21158-0951	GARLK	471866!
21158-0958	GARLK	473448*
21158-0961	GARLK	471984*
21158-0964	GARLK	473313
21158-0976	GARLK	472070*
21158-0978	GARLK	472070
21158-0979	GARLK	471866!
21158-0982	GARLK	473449
21158-0984	GARLK	473449
21158-0987	GARLK	480281!
21158-0988	GARLK	450269*
21158-0991	GARLK	473450
21158-1003	GARLK	451993=
21158-1005	GARLK	451993=
21158-1006	GARLK	473451!*
21158-1012	GARLK	473452
21158-1021	GARLK	473453
21158-1023	GARLK	473453*
21158-1042	GARLK	472439*
21158-1043	GARLK	472439*
21158-1044	GARLK	472439
21158-1045	GARLK	471868
21158-1047	GARLK	471868
21158-1048	GARLK	472572!
21158-1050	GARLK	472572!
21158-1051	GARLK	473179!
21158-1052	GARLK	473179!
21158-1053	GARLK	473179!
21158-1054	GARLK	414045!*
21158-1057	GARLK	473238
21158-1058	GARLK	473238
21158-1059	GARLK	473238!
21158-1060	GARLK	450084!
21158-1062	GARLK	450084!
21158-1063	GARLK	473239
21158-1065	GARLK	473239
21158-1066	GARLK	473457!*
21158-1069	GARLK	473240!*
21158-1071	GARLK	473240!
21158-1075	GARLK	473458!*
21158-1076	GARLK	473458!
21158-1078	GARLK	472439*
21158-1081	GARLK	471868*
21158-1084	GARLK	472572!
21158-1090	GARLK	414045!*
21158-1105	GARLK	473240!*
21158-1114	GARLK	472319
21158-1116	GARLK	472319
21158-1117	GARLK	473459
21158-1119	GARLK	473459
21158-1120	GARLK	473241
21158-1122	GARLK	473241
21158-1129	GARLK	472144!
21158-1130	GARLK	472144!
21158-1131	GARLK	472144!*
21158-1132	GARLK	473460
21158-1134	GARLK	473460
21158-1135	GARLK	472394*
21158-1137	GARLK	472394
21158-1138	GARLK	473461!*
21158-1139	GARLK	473461!*
21158-1141	GARLK	471391!*
21158-1142	GARLK	471391!*
21158-1143	GARLK	471391!
21158-1147	GARLK	473462
21158-1148	GARLK	473462
21158-1149	GARLK	473462
21158-1150	GARLK	450472!*
21158-1153	GARLK	473241
21158-1154	GARLK	473241*
21158-1162	GARLK	450474*
21158-1165	GARLK	50528*
21158-1166	GARLK	50528*
21158-1167	GARLK	50528
21158-1171	GARLK	473461!*
21158-1174	GARLK	471391!*
21158-1180	GARLK	473462
21158-1186	GARLK	471870!
21158-1187	GARLK	471870!
21158-1188	GARLK	471870!
21158-1189	GARLK	472492!
21158-1190	GARLK	472492!
21158-1191	GARLK	472492!
21158-1198	GARLK	472924!
21158-1199	GARLK	472924!
21158-1200	GARLK	472924!
21158-1201	GARLK	470530!
21158-1203	GARLK	470530!
21158-1204	GARLK	472397!
21158-1205	GARLK	472397!
21158-1206	GARLK	472397!
21158-1207	GARLK	473463*
21158-1209	GARLK	473463
21158-1210	GARLK	473242*
21158-1212	GARLK	473242
21158-1216	GARLK	473464!
21158-1216	GARLK	473464
21158-1217	GARLK	473464!
21158-1217	GARLK	473464
21158-1218	GARLK	473464
21158-1218	GARLK	473464!
21158-1222	GARLK	472924!
21158-1225	GARLK	470530!
21158-1228	GARLK	472397!
21158-1231	GARLK	473463*
21158-1240	GARLK	473464!
21158-1240	GARLK	473464
21158-1246	GARLK	412027*
21158-1252	GARLK	451948
21158-1253	GARLK	451948
21158-1254	GARLK	451948*
21158-1255	GARLK	473466
21158-1258	GARLK	472012
21158-1260	GARLK	472012
21158-1261	GARLK	450307*
21158-1263	GARLK	450307
21158-1264	GARLK	450311*
21158-1266	GARLK	450311
21158-1270	GARLK	416738!
21158-1270	GARLK	450096
21158-1276	GARLK	450313
21158-1278	GARLK	450313
21158-1279	GARLK	450532
21158-1282	GARLK	451948*
21158-1285	GARLK	473466*
21158-1288	GARLK	472012*
21158-1291	GARLK	450307*
21158-1294	GARLK	450311*
21158-1300	GARLK	416738!
21158-1300	GARLK	450096
21158-1306	GARLK	450313*
21158-1309	GARLK	450532*
21158-1312	GARLK	450343*
21158-1321	GARLK	470898
21158-1322	GARLK	470898
21158-1323	GARLK	470898!
21158-1324	GARLK	473467
21158-1326	GARLK	473467
21158-1327	GARLK	472015!
21158-1328	GARLK	472015!
21158-1329	GARLK	472015!
21158-1330	GARLK	410308!
21158-1331	GARLK	410308!
21158-1332	GARLK	410308!
21158-1333	GARLK	472016*
21158-1334	GARLK	472016
21158-1335	GARLK	472016
21158-1339	GARLK	472409!
21158-1341	GARLK	472409!
21158-1345	GARLK	473243
21158-1346	GARLK	473243
21158-1347	GARLK	473243
21158-1348	GARLK	413469!*
21158-1349	GARLK	413469!*
21158-1350	GARLK	413469!*
21158-1357	GARLK	416267!*
21158-1359	GARLK	416267!
21158-1363	GARLK	473467
21158-1365	GARLK	473467
21158-1369	GARLK	410308!
21158-1372	GARLK	472016*
21158-1378	GARLK	450621*
21158-1384	GARLK	450869*
21158-1385	GARLK	450869*
21158-1396	GARLK	416267!*
21158-1398	GARLK	416267!
21158-1399	GARLK	473244
21158-1400	GARLK	473244
21158-1401	GARLK	473244
21158-1402	GARLK	472018
21158-1403	GARLK	472018
21158-1404	GARLK	472018*
21158-1405	GARLK	473471*
21158-1406	GARLK	473471
21158-1407	GARLK	473471
21158-1408	GARLK	472020*
21158-1410	GARLK	472020*
21158-1414	GARLK	470354*
21158-1415	GARLK	470354
21158-1416	GARLK	470354*
21158-1420	GARLK	473245!*
21158-1422	GARLK	471504!
21158-1423	GARLK	412943*
21158-1425	GARLK	412943*
21158-1426	GARLK	413472
21158-1428	GARLK	413472
21158-1432	GARLK	416268
21158-1434	GARLK	416268
21158-1435	GARLK	472234*
21158-1438	GARLK	472018*
21158-1441	GARLK	473471*
21158-1444	GARLK	472020*
21158-1450	GARLK	470354*
21158-1459	GARLK	50631*
21158-1471	GARLK	471341!
21158-1473	GARLK	471341!
21158-1474	GARLK	471272!
21158-1475	GARLK	471272!
21158-1476	GARLK	471272!
21158-1477	GARLK	473473*

! Industrial Size/Type * Minor Width Difference

= The U.S. customer service number is 877-4-TIMKEN. The Canadian customer service numbers are 800-565-4927 (English) and 800-565-0438 (French-Canadian).

Mfr. No.	Name	Zero Duplication or Recommended Industrial
21158-1479	GARLK	473473
21158-1480	GARLK	471138!
21158-1481	GARLK	471138!
21158-1482	GARLK	471138!
21158-1486	GARLK	410737!
21158-1492	GARLK	472636!
21158-1493	GARLK	472636!
21158-1494	GARLK	472636!
21158-1495	GARLK	411253!
21158-1496	GARLK	411253!
21158-1497	GARLK	411253!
21158-1498	GARLK	412920!
21158-1499	GARLK	412920!
21158-1500	GARLK	412920!
21158-1501	GARLK	455136*
21158-1504	GARLK	411376!
21158-1505	GARLK	411376!
21158-1506	GARLK	411376!
21158-1507	GARLK	472299*
21158-1510	GARLK	471272!
21158-1522	GARLK	410737!
21158-1528	GARLK	470645*
21158-1531	GARLK	411253!
21158-1534	GARLK	412920!
21158-1537	GARLK	455136*
21158-1540	GARLK	411376!
21158-1546	GARLK	415234!*
21158-1549	GARLK	415259!*
21158-1561	GARLK	472150*
21158-1563	GARLK	472150
21158-1573	GARLK	411394!
21158-1575	GARLK	411394!
21158-1576	GARLK	410694!*
21158-1578	GARLK	410694!*
21158-1579	GARLK	450133*
21158-1581	GARLK	450133*
21158-1585	GARLK	416444*
21158-1587	GARLK	416444
21158-1588	GARLK	455647=
21158-1594	GARLK	455321*
21158-1596	GARLK	455321
21158-1600	GARLK	472150*
21158-1602	GARLK	472150
21158-1612	GARLK	411394!
21158-1633	GARLK	455321*
21158-1639	GARLK	473474*
21158-1641	GARLK	473474
21158-1642	GARLK	470565!
21158-1644	GARLK	470565!
21158-1648	GARLK	473475*
21158-1650	GARLK	473475*
21158-1654	GARLK	413246
21158-1655	GARLK	413246
21158-1656	GARLK	413246
21158-1657	GARLK	412119!
21158-1658	GARLK	412119!
21158-1659	GARLK	412119!
21158-1660	GARLK	413247!
21158-1661	GARLK	413247!
21158-1662	GARLK	413247!
21158-1663	GARLK	410987!
21158-1666	GARLK	416271!*
21158-1668	GARLK	416271!
21158-1669	GARLK	412861
21158-1671	GARLK	412861
21158-1672	GARLK	410825
21158-1675	GARLK	416071*
21158-1677	GARLK	416071
21158-1678	GARLK	417480!
21158-1679	GARLK	417480!
21158-1680	GARLK	417480!
21158-1687	GARLK	473475*
21158-1693	GARLK	413246
21158-1696	GARLK	412119!
21158-1699	GARLK	413247!
21158-1705	GARLK	416271!*
21158-1714	GARLK	416071*
21158-1723	GARLK	471887
21158-1725	GARLK	471887
21158-1735	GARLK	412040*
21158-1737	GARLK	412040
21158-1738	GARLK	411500*
21158-1740	GARLK	411500*
21158-1741	GARLK	413478*
21158-1742	GARLK	413478*
21158-1743	GARLK	413478*
21158-1744	GARLK	450104*
21158-1745	GARLK	450104*
21158-1746	GARLK	450104
21158-1747	GARLK	411245!
21158-1749	GARLK	411245!
21158-1750	GARLK	417073*
21158-1751	GARLK	417073*
21158-1752	GARLK	417073
21158-1771	GARLK	412040*
21158-1774	GARLK	50560*
21158-1775	GARLK	50560
21158-1780	GARLK	450104*
21158-1783	GARLK	411245!
21158-1801	GARLK	472029
21158-1802	GARLK	472029*
21158-1803	GARLK	472029*
21158-1806	GARLK	410752
21158-1807	GARLK	471271!
21158-1808	GARLK	471271!
21158-1809	GARLK	471271!
21158-1810	GARLK	410496!
21158-1812	GARLK	410496!
21158-1813	GARLK	470605!*
21158-1815	GARLK	470605!*
21158-1819	GARLK	415449!
21158-1820	GARLK	415449!
21158-1821	GARLK	415449!
21158-1822	GARLK	415001!
21158-1823	GARLK	415001!
21158-1824	GARLK	415001!
21158-1825	GARLK	416273!
21158-1826	GARLK	416273!
21158-1827	GARLK	416273!
21158-1828	GARLK	455079!*
21158-1830	GARLK	455079!
21158-1831	GARLK	415082*
21158-1834	GARLK	455655!*
21158-1836	GARLK	455655!*
21158-1840	GARLK	471271!
21158-1841	GARLK	471271!
21158-1852	GARLK	415449!
21158-1855	GARLK	415001!
21158-1857	GARLK	415001!
21158-1858	GARLK	416273!
21158-1861	GARLK	455079!*
21158-1882	GARLK	413479*
21158-1885	GARLK	415302*
21158-1886	GARLK	415302*
21158-1887	GARLK	415302
21158-1888	GARLK	455311*
21158-1890	GARLK	455311
21158-1891	GARLK	415988*
21158-1892	GARLK	415988*
21158-1893	GARLK	415988*
21158-1894	GARLK	417481*
21158-1896	GARLK	417481*
21158-1897	GARLK	455280*
21158-1899	GARLK	455280
21158-1909	GARLK	411330!*
21158-1912	GARLK	415302*
21158-1915	GARLK	455311*
21158-1918	GARLK	415988*
21158-1921	GARLK	417481*
21158-1924	GARLK	455280*
21158-1926	GARLK	455280*
21158-1927	GARLK	412871!
21158-1930	GARLK	412871!
21158-1932	GARLK	412871!
21158-1933	GARLK	413248
21158-1935	GARLK	413248
21158-1936	GARLK	450412*
21158-1939	GARLK	415483!
21158-1941	GARLK	415483!
21158-1945	GARLK	415458!
21158-1946	GARLK	415458!
21158-1947	GARLK	415458!
21158-1948	GARLK	417343!*
21158-1950	GARLK	417343!
21158-1951	GARLK	415007*
21158-1952	GARLK	415007*
21158-1954	GARLK	417082*
21158-1955	GARLK	417082*
21158-1956	GARLK	417082
21158-1960	GARLK	413248
21158-1966	GARLK	415483!
21158-1972	GARLK	415458!
21158-1975	GARLK	417343!*
21158-1978	GARLK	415007*
21158-1981	GARLK	417082*
21158-1993	GARLK	455434*
21158-1994	GARLK	455434*
21158-2002	GARLK	455151*
21158-2003	GARLK	455151*
21158-2004	GARLK	455151
21158-2005	GARLK	455008*
21158-2006	GARLK	455008*
21158-2007	GARLK	455008*
21158-2014	GARLK	455434*
21158-2023	GARLK	455151*
21158-2025	GARLK	455151
21158-2026	GARLK	455008*
21158-2028	GARLK	455008*
21158-2032	GARLK	480491*
21158-2034	GARLK	480491
21158-2035	GARLK	416664!
21158-2036	GARLK	416664!
21158-2037	GARLK	416664!
21158-2038	GARLK	417484!
21158-2039	GARLK	417484!
21158-2040	GARLK	417484!
21158-2041	GARLK	415984!*
21158-2043	GARLK	415984!*
21158-2044	GARLK	417316!
21158-2045	GARLK	417316!
21158-2046	GARLK	417316!
21158-2047	GARLK	415960
21158-2048	GARLK	415960
21158-2049	GARLK	415960
21158-2050	GARLK	416706!
21158-2052	GARLK	416706!
21158-2059	GARLK	417484!
21158-2062	GARLK	415984!*
21158-2065	GARLK	417316!
21158-2067	GARLK	417316!
21158-2068	GARLK	415960!
21158-2086	GARLK	455005*
21158-2088	GARLK	455005
21158-2089	GARLK	417485*
21158-2090	GARLK	417485*
21158-2091	GARLK	417485*
21158-2092	GARLK	475384*
21158-2093	GARLK	475384
21158-2094	GARLK	475384*
21158-2101	GARLK	455005*
21158-2103	GARLK	455005
21158-2104	GARLK	417485*
21158-2115	GARLK	415303!*
21158-2117	GARLK	415303!*
21158-2118	GARLK	417344!
21158-2120	GARLK	417344!
21158-2121	GARLK	416404!*
21158-2122	GARLK	416404!*
21158-2123	GARLK	416404!*
21158-2124	GARLK	416921!
21158-2125	GARLK	416921!
21158-2126	GARLK	416921!
21158-2127	GARLK	417134
21158-2128	GARLK	417134
21158-2132	GARLK	417344!
21158-2135	GARLK	416404!*
21158-2138	GARLK	416921!
21158-2146	GARLK	416956*
21158-2147	GARLK	416956*
21158-2148	GARLK	416956
21158-2149	GARLK	417159*
21158-2150	GARLK	417159*
21158-2151	GARLK	417159*
21158-2152	GARLK	416654!
21158-2153	GARLK	416654!
21158-2154	GARLK	416654!
21158-2155	GARLK	417486*
21158-2157	GARLK	416956*
21158-2160	GARLK	417159*
21158-2163	GARLK	416654!
21158-2166	GARLK	417486*
21158-2168	GARLK	417349*
21158-2169	GARLK	417349*
21158-2170	GARLK	417349*
21158-2171	GARLK	417350!
21158-2172	GARLK	417350!
21158-2173	GARLK	417350!
21158-2174	GARLK	415995!
21158-2175	GARLK	415995!
21158-2176	GARLK	415995!
21158-2189	GARLK	55548
21158-2190	GARLK	55548*
21158-2191	GARLK	55548*
21158-2196	GARLK	455820*
21158-2197	GARLK	455820*
21158-2223	GARLK	455020*
21158-2224	GARLK	455020*
21158-2225	GARLK	417621!
21158-2436	GARLK	415832*
21158-2437	GARLK	415832*
21158-2451	GARLK	55646*=
21158-2452	GARLK	55646*=
21158-2510	GARLK	417366!*
21158-2513	GARLK	415958
21158-2513	GARLK	415958!
21158-2706	GARLK	417238
21158-2707	GARLK	417238*
21158-2994	GARLK	417258
21158-2995	GARLK	417258*
21158-3547	GARLK	415482
21158-3552	GARLK	415551*
21158-3863	GARLK	350435
21158-3869	GARLK	472705!
21158-3871	GARLK	450342
21158-3872	GARLK	471747!
21158-3873	GARLK	471747!
21158-3874	GARLK	471747!
21158-3876	GARLK	473425

! Industrial Size/Type * Minor Width Difference

= The U.S. customer service number is 877-4-TIMKEN. The Canadian customer service numbers are 800-565-4927 (English) and 800-565-0438 (French-Canadian).

Mfr. No.	Name	Zero Duplication or Recommended Industrial
21158-3879	GARLK	472536
21158-3880	GARLK	471344*
21158-3883	GARLK	473442!*
21158-3885	GARLK	470088*
21158-3887	GARLK	471841
21158-3889	GARLK	450965*
21158-3902	GARLK	455080*
21158-3904	GARLK	472234*
21158-3949	GARLK	455966
21158-4484	GARLK	455396*
21158-4560	GARLK	415294!
21158-4579	GARLK	470088
21158-4580	GARLK	415023
21158-4584	GARLK	473197
21158-4586	GARLK	471570!
21158-4589	GARLK	450400*
21158-4590	GARLK	472164!
21158-4592	GARLK	470898!
21158-4593	GARLK	411330!*
21158-4600	GARLK	474256
21158-4603	GARLK	471231!
21158-4605	GARLK	471554!
21158-4610	GARLK	415871*
21158-4640	GARLK	415991
21158-4640	GARLK	455146!
21158-4645	GARLK	450143
21158-4646	GARLK	412119!
21158-4651	GARLK	415035
21158-4651	GARLK	415035!
21158-4652	GARLK	416239!*
21158-4654	GARLK	417172*
21158-4659	GARLK	473244
21158-4665	GARLK	472636!
21158-4667	GARLK	55548*
21158-4668	GARLK	417541*
21158-4669	GARLK	416892!*
21158-4670	GARLK	472924!
21158-4671	GARLK	471504!
21158-4672	GARLK	472164!
21158-4677	GARLK	472560N!
21158-4681	GARLK	415124*
21158-4682	GARLK	417351!
21158-4686	GARLK	417344!
21158-4687	GARLK	472184=
21158-4688	GARLK	415645!
21158-4688	GARLK	455104
21158-4691	GARLK	473475*
21158-4693	GARLK	472144!*
21158-4695	GARLK	416229*
21158-4710	GARLK	455026*
21158-4712	GARLK	456105*
21158-4717	GARLK	455019!*
21158-4718	GARLK	473212!*
21158-4720	GARLK	416107!
21158-4720	GARLK	455073
21158-4723	GARLK	417134
21158-4727	GARLK	416865!*
21158-4729	GARLK	457874
21158-4732	GARLK	417196!*
21158-4734	GARLK	415082*
21158-4735	GARLK	411376!
21158-4735F1	GARLK	411376!
21158-4736	GARLK	55028*
21158-4738	GARLK	417621!
21158-4740	GARLK	414045!*
21158-4745	GARLK	415991
21158-4745	GARLK	455146!
21158-4752	GARLK	417512*
21158-4754	GARLK	471554!
21158-4766	GARLK	473232
21158-4766R1	GARLK	473232!
21158-4768	GARLK	415482*
21158-4771	GARLK	416892!*
21158-4772	GARLK	416345!
21158-4772	GARLK	455033
21158-4774	GARLK	55078S*
21158-4775	GARLK	417526*
21158-4780	GARLK	416892!*
21158-4781	GARLK	471549!
21158-4783	GARLK	417541*
21158-4784	GARLK	415072*
21158-4785	GARLK	415124*
21158-4787	GARLK	476470
21158-4788	GARLK	415066*
21158-4789	GARLK	415327*
21158-4790	GARLK	416288!*
21158-4792	GARLK	471354!*
21158-4800	GARLK	417020*
21158-4801	GARLK	415227!*
21158-4802	GARLK	450545
21158-4803	GARLK	55532=
21158-4804	GARLK	417487
21158-4805	GARLK	55228*=
21158-4806	GARLK	455129*
21158-4808	GARLK	417247!*
21158-4809	GARLK	415294!
21158-4825	GARLK	417254*
21158-4828	GARLK	416865!*
21158-4832	GARLK	415303!*
21158-4836	GARLK	417247!*
21158-4837	GARLK	415196!*
21158-4838	GARLK	413469!*
21158-4838F1	GARLK	413469!
21158-4844	GARLK	415001!
21158-4847	GARLK	471539!
21158-4854	GARLK	415035
21158-4855	GARLK	481537*
21158-4861	GARLK	473226*
21158-4862	GARLK	471870!
21158-4865	GARLK	417254*
21158-4871	GARLK	470954!*
21158-4872	GARLK	417597*
21158-4873	GARLK	416888!
21158-4874	GARLK	55392*=
21158-4876	GARLK	455406!*
21158-4878	GARLK	417602!*
21158-4882	GARLK	417262!
21158-4883	GARLK	417269!
21158-4891	GARLK	471862*
21158-4897	GARLK	415025*
21158-4899	GARLK	455536*
21158-4900	GARLK	471391!*
21158-4902	GARLK	417269!
21158-4904	GARLK	416556!
21158-4904	GARLK	472157
21158-4907	GARLK	50026*
21158-4908F1	GARLK	471529
21158-4912	GARLK	415150!*
21158-4914	GARLK	416271!*
21158-4916	GARLK	470898!
21158-4924	GARLK	417597*
21158-4925	GARLK	417606*
21158-4928	GARLK	416154!*
21158-4929	GARLK	455462*
21158-4934	GARLK	415066*
21158-4938	GARLK	412920!
21158-4938F1	GARLK	412920!
21158-4945	GARLK	416738!
21158-4945	GARLK	450096
21158-4958	GARLK	411394!
21158-4959	GARLK	416268
21158-4965	GARLK	451031=
21158-4966	GARLK	417247!*
21158-4967	GARLK	417549!*
21158-4968	GARLK	416144*
21158-4976	GARLK	472843*
21158-4982	GARLK	417547*
21158-4987	GARLK	415458!
21158-4988	GARLK	470774!
21158-4991	GARLK	455480!*
21158-4992	GARLK	473237!*
21158-4998	GARLK	417486*
21158-5002	GARLK	415683*
21158-5005	GARLK	472179
21158-5007	GARLK	472287!*
21158-5008	GARLK	415437!
21158-5008	GARLK	415437
21158-5025	GARLK	416288!*
21158-5028	GARLK	455476*
21158-5030	GARLK	415023
21158-5031	GARLK	415072*
21158-5041	GARLK	471538!*
21158-5041F1	GARLK	471538!
21158-5043	GARLK	415371*
21158-5049	GARLK	415034!
21158-5050	GARLK	350364*
21158-5051	GARLK	417539!*
21158-5053	GARLK	473242*
21158-5059	GARLK	417351!
21158-5060	GARLK	455336*
21158-5061	GARLK	415483!
21158-5063	GARLK	55028*
21158-5066	GARLK	415045!*
21158-5078	GARLK	472397!
21158-5079	GARLK	416339
21158-5079	GARLK	455031!
21158-5082	GARLK	450124=
21158-5208F1	GARLK	417211!
21158-5256F1	GARLK	472179
21158-5268F1	GARLK	473440!
21158-5283F1	GARLK	472492!
21158-5295	GARLK	471744!
21158-5387F1	GARLK	415449!
21158-5387R1	GARLK	415449!
21158-5393	GARLK	473367!
21158-5393	GARLK	473367
21158-5394F1	GARLK	471785!
21158-5398	GARLK	412871!
21158-5496	GARLK	473439!
21158-5501	GARLK	450523
21158-5560	GARLK	411253!
21158-5581	GARLK	415458!
21158-5656	GARLK	473426
21158-5657F1	GARLK	471466!
21158-5688	GARLK	470898=
21158-5704	GARLK	471737
21158-5886	GARLK	455008*
21158-5887	GARLK	473446*
21158-5892	GARLK	416888!
21158-5893	GARLK	472810!
21158-5897	GARLK	455080*
21158-5900	GARLK	473466*
21158-5906	GARLK	417020*
21158-5907	GARLK	416404!*
21158-5912	GARLK	417548*
21158-5913	GARLK	472018*
21158-5914	GARLK	473010
21158-5920	GARLK	417567*
21158-5922	GARLK	417349*
21158-5925	GARLK	417486*
21158-5929	GARLK	415551*
21158-5930	GARLK	417211!*
21158-5933	GARLK	55301S*
21158-5937	GARLK	482310
21158-5938	GARLK	415371*
21158-5945	GARLK	417278*
21158-5947	GARLK	411253!
21158-5948	GARLK	415984!*
21158-5953	GARLK	417357
21158-5953	GARLK	455192!
21158-5957	GARLK	471413!*
21158-5959	GARLK	415090*
21158-5960	GARLK	417606*
21158-5966	GARLK	472179
21158-5968	GARLK	473474
21158-5969	GARLK	455509
21158-5978	GARLK	473380*
21158-5980	GARLK	412119!
21158-5981	GARLK	55078S*
21158-5983	GARLK	415036*
21158-6028F1	GARLK	472185!
21158-6062	GARLK	472810!
21158-6099	GARLK	481397*
21158-6127	GARLK	471231!
21158-6141F1	GARLK	473244!
21158-6192	GARLK	470806*
21158-6224	GARLK	480630!
21158-6230	GARLK	473231
21158-6231	GARLK	473231
21158-6245	GARLK	450400*
21158-6252	GARLK	472164!
21158-6266	GARLK	417474*
21158-6271	GARLK	470625!*
21158-6272	GARLK	472492!
21158-6289	GARLK	471498*
21158-6300	GARLK	476514
21158-6328	GARLK	417621!
21158-6333	GARLK	455330!*
21158-6335	GARLK	455583N!*
21158-6340	GARLK	417600*
21158-6353	GARLK	473405*
21158-6356	GARLK	476470*
21158-6358	GARLK	415991
21158-6358	GARLK	455146!
21158-6359	GARLK	416332!
21158-6360	GARLK	415035
21158-6360	GARLK	415035!
21158-6361	GARLK	415196!*
21158-6363	GARLK	416888!
21158-6365	GARLK	415725!*
21158-6366	GARLK	417549!*
21158-6369	GARLK	417515*
21158-6370	GARLK	416229*
21158-6374	GARLK	416364!*
21158-6375	GARLK	416239!*
21158-6378	GARLK	415867*
21158-6385	GARLK	417603!
21158-6387	GARLK	55301S*
21158-6389	GARLK	55222*=
21158-6390	GARLK	55239*=
21158-6391	GARLK	417605*
21158-6395	GARLK	415482*
21158-6411	GARLK	471413*
21158-6413	GARLK	417247!*
21158-6414	GARLK	473460*
21158-6415	GARLK	471554!
21158-6418	GARLK	415295*
21158-6422	GARLK	417598*
21158-6431	GARLK	455022*
21158-6433	GARLK	416364!*
21158-6434	GARLK	417357
21158-6434	GARLK	455192!
21158-6437	GARLK	416239!*
21158-6438	GARLK	472397!
21158-6438R1	GARLK	472397!
21158-6439	GARLK	417350!
21158-6440	GARLK	471272!
21158-6444	GARLK	416654!

! Industrial Size/Type * Minor Width Difference

= The U.S. customer service number is 877-4-TIMKEN. The Canadian customer service numbers are 800-565-4927 (English) and 800-565-0438 (French-Canadian).

Mfr. No.	Name	Zero Duplication or Recommended Industrial
21158-6446	GARLK	412473!
21158-6450	GARLK	471619!
21158-6451	GARLK	417488!*
21158-6456	GARLK	415449!
21158-6459F1	GARLK	470565!
21158-6461	GARLK	456105*
21158-6462	GARLK	473225!*
21158-6465	GARLK	415449!
21158-6465R1	GARLK	415449!
21158-6466	GARLK	471763*
21158-6467	GARLK	417316!
21158-6468	GARLK	416071*
21158-6469	GARLK	472394*
21158-6469R1	GARLK	472394
21158-6470	GARLK	471689!
21158-6470F1	GARLK	471689!*
21158-6471	GARLK	417316!
21158-6474	GARLK	470682*
21158-6475	GARLK	471835!
21158-6478	GARLK	471272!
21158-6479R1	GARLK	471192
21158-6484	GARLK	416666*
21158-6487	GARLK	471887*
21158-6489	GARLK	476470
21158-6497	GARLK	417487
21158-6499	GARLK	417487
21158-6500	GARLK	471267!*
21158-6502	GARLK	416288!*
21158-6506	GARLK	471271!
21158-6506F1	GARLK	471271!
21158-6510	GARLK	417600*
21158-6511	GARLK	415088!
21158-6511	GARLK	415088
21158-6513	GARLK	416167!
21158-6515	GARLK	455434*
21158-6516	GARLK	473231
21158-6517	GARLK	471808!*
21158-6521	GARLK	455462*
21158-6522	GARLK	471984*
21158-6522R1	GARLK	471984
21158-6523	GARLK	471267!*
21158-6523F1	GARLK	471267!
21158-6524F1	GARLK	471649!
21158-6528	GARLK	418028
21158-6528	GARLK	455137!
21158-6529	GARLK	473224!*
21158-6530	GARLK	415072*
21158-6534	GARLK	415991
21158-6534	GARLK	455146!
21158-6541	GARLK	411245!
21158-6545	GARLK	415711*
21158-6546	GARLK	472439*
21158-6547	GARLK	473237!*
21158-6548	GARLK	473243*
21158-6549	GARLK	473405*
21158-6550	GARLK	417605*
21158-6551	GARLK	473228
21158-6551R1	GARLK	473228!
21158-6554	GARLK	473236!*
21158-6556	GARLK	417357
21158-6556	GARLK	455192!
21158-6560	GARLK	412040*
21158-6563	GARLK	415045!*
21158-6564	GARLK	415551*
21158-6565	GARLK	417357
21158-6565	GARLK	455192!
21158-6568	GARLK	415035
21158-6568	GARLK	415035!
21158-6573	GARLK	415090*
21158-6576	GARLK	470774!
21158-6578	GARLK	415449!
21158-6581	GARLK	417603!*
21158-6584	GARLK	476470
21158-6585	GARLK	455655!*
21158-6586	GARLK	415090*
21158-6588	GARLK	416654!
21158-6588R1	GARLK	416654!
21158-6590	GARLK	416332!
21158-6592	GARLK	473450
21158-6593	GARLK	472015!
21158-6599	GARLK	416921!
21158-6600	GARLK	416345!
21158-6600	GARLK	455033
21158-6602	GARLK	457874*
21158-6603	GARLK	415725!*
21158-6604	GARLK	472015!
21158-6605	GARLK	473243*
21158-6608	GARLK	471870!
21158-6610	GARLK	473228
21158-6616	GARLK	455476*
21158-6630	GARLK	55367*=
21158-6632	GARLK	455151
21158-6634	GARLK	415116*
21158-6635	GARLK	417542*
21158-6638	GARLK	473240!*
21158-6639	GARLK	473197
21158-6640	GARLK	415725!*
21158-6644	GARLK	457874
21158-6645	GARLK	415991
21158-6645	GARLK	455146!
21158-6651	GARLK	417343!*
21158-6652	GARLK	417496*
21158-6654	GARLK	472138
21158-6658	GARLK	471276*
21158-6664	GARLK	415379
21158-6664	GARLK	415379!
21158-6665	GARLK	417541*
21158-6667R1	GARLK	470380!
21158-6668	GARLK	413478*
21158-6670	GARLK	415294!
21158-6675R1	GARLK	471801!
21158-6678	GARLK	417082*
21158-6679	GARLK	417191
21158-6679	GARLK	456585
21158-6680	GARLK	416921!
21158-6680F1	GARLK	416921!
21158-6682	GARLK	472636!
21158-6687	GARLK	415077*
21158-6692	GARLK	417355!*
21158-67	GARLK	471281!
21158-6700	GARLK	415302*
21158-6700F1	GARLK	415302
21158-6701	GARLK	473214
21158-6705	GARLK	471821!
21158-6706	GARLK	473464!
21158-6706	GARLK	473464
21158-6707	GARLK	417554!*
21158-6708	GARLK	476470
21158-6711	GARLK	415725!*
21158-6713	GARLK	417601*
21158-6714	GARLK	415988*
21158-6716	GARLK	416664!
21158-6722	GARLK	417601*
21158-6723	GARLK	417488!*
21158-6730	GARLK	417344!
21158-6730R1	GARLK	417344!
21158-6732	GARLK	471760*
21158-6733	GARLK	330385!
21158-6734	GARLK	416154!*
21158-6739	GARLK	417621!
21158-6741	GARLK	417254*
21158-6741F1	GARLK	417254
21158-6744F1	GARLK	471981
21158-6745	GARLK	471766!
21158-6745R1	GARLK	471766!
21158-6746	GARLK	415683*
21158-6750	GARLK	415645!
21158-6750	GARLK	455104
21158-6753	GARLK	474265
21158-6755F1	GARLK	471224!
21158-6757	GARLK	411376!
21158-6760	GARLK	417603!*
21158-6762	GARLK	417134*
21158-6764	GARLK	455015*
21158-6765	GARLK	417278*
21158-6767	GARLK	415035
21158-6768	GARLK	417020
21158-6770	GARLK	417604
21158-6773	GARLK	415551*
21158-6774	GARLK	473214
21158-6774R1	GARLK	473214!
21158-6794	GARLK	473367!
21158-6794	GARLK	473367
21158-6795	GARLK	471341!
21158-6796	GARLK	417362!*
21158-6797	GARLK	455330!*
21158-6798	GARLK	415559*
21158-6799	GARLK	415035
21158-68	GARLK	471281!
21158-6800	GARLK	417082*
21158-6802	GARLK	455480!*
21158-6806	GARLK	416339
21158-6806	GARLK	455031!
21158-6832	GARLK	472179
21158-6832R1	GARLK	472179
21158-6833	GARLK	417606*
21158-6835	GARLK	417509*
21158-6838	GARLK	9568*
21158-6839	GARLK	476470*
21158-6840	GARLK	417506*
21158-6842	GARLK	417020*
21158-6844	GARLK	455397*
21158-6847	GARLK	417526*
21158-6853	GARLK	472394*
21158-6857	GARLK	471692!
21158-6858	GARLK	55141*
21158-6860	GARLK	473010
21158-6860R1	GARLK	473010!
21158-6860T2	GARLK	473010!
21158-6864	GARLK	417073*
21158-6865	GARLK	417481*
21158-6866	GARLK	412871!
21158-6868	GARLK	417351!
21158-6870	GARLK	455134!*
21158-6871	GARLK	417515*
21158-6872	GARLK	417362!*
21158-6888	GARLK	417584*
21158-6892	GARLK	416239!*
21158-6893	GARLK	416865!*
21158-6895	GARLK	455406!*
21158-6896	GARLK	481073*
21158-6898	GARLK	470565!*
21158-6898R1	GARLK	470565!
21158-6899	GARLK	473229
21158-69	GARLK	471535!*
21158-6900	GARLK	417316!
21158-6901	GARLK	416332!
21158-6904	GARLK	472397!
21158-6904F1	GARLK	472397!
21158-6907	GARLK	415027*
21158-6914	GARLK	416476!
21158-6917	GARLK	417525*
21158-6920	GARLK	415294!
21158-6921	GARLK	455462*
21158-6923	GARLK	415711*
21158-6924	GARLK	416666*
21158-6927	GARLK	471554!
21158-6927F1	GARLK	471554!
21158-6931	GARLK	55441*=
21158-6934	GARLK	473235!*
21158-6937	GARLK	470625!
21158-6937R1	GARLK	470625!
21158-6938	GARLK	417269!
21158-6939	GARLK	417541*
21158-6946	GARLK	417539!*
21158-6947	GARLK	416364!*
21158-6949	GARLK	415138!*
21158-6950	GARLK	450869*
21158-6952	GARLK	417362!*
21158-6955	GARLK	471141!
21158-6957	GARLK	470354*
21158-6959	GARLK	455476*
21158-6961	GARLK	474264
21158-6966	GARLK	455655!*
21158-6968	GARLK	415021*
21158-6971	GARLK	471558*
21158-6975	GARLK	9568*
21158-6978	GARLK	415196!*
21158-6981	GARLK	455194*
21158-6982	GARLK	416345!
21158-6982	GARLK	455033
21158-6984	GARLK	471564*
21158-6990	GARLK	415035
21158-6991	GARLK	416125!*
21158-6992	GARLK	476838!
21158-6993F1	GARLK	471765!
21158-6995	GARLK	471138!*
21158-70	GARLK	471535!
21158-7007	GARLK	472810!
21158-7039	GARLK	471539!
21158-7060	GARLK	474256
21158-7069	GARLK	470774!
21158-7072	GARLK	474264
21158-7081	GARLK	473237!*
21158-7090	GARLK	471271!
21158-7091	GARLK	415082*
21158-7099	GARLK	472924!
21158-7099F1	GARLK	472924!*
21158-7101	GARLK	417604
21158-7104	GARLK	415458!
21158-7110	GARLK	416888!
21158-7114	GARLK	415551*
21158-7115	GARLK	415991
21158-7115	GARLK	455146!
21158-7120	GARLK	417366!*
21158-7121	GARLK	473437*
21158-7125	GARLK	473231
21158-7126	GARLK	470596*
21158-7128	GARLK	416666*
21158-7130	GARLK	471316
21158-7134	GARLK	416154!*
21158-7140	GARLK	472029*
21158-7141	GARLK	416556!
21158-7141	GARLK	472157
21158-7145	GARLK	472012*
21158-7145F1	GARLK	472012
21158-7146	GARLK	350435*
21158-7152	GARLK	473367!
21158-7152	GARLK	473367
21158-7152F1	GARLK	473367
21158-7153	GARLK	417350!
21158-7154	GARLK	415036*
21158-7155	GARLK	415072*
21158-7159	GARLK	455005*
21158-7160	GARLK	472016*
21158-7162	GARLK	415351!*
21158-7164	GARLK	473455!
21158-7165	GARLK	416891!*

! Industrial Size/Type * Minor Width Difference

= The U.S. customer service number is 877-4-TIMKEN. The Canadian customer service numbers are 800-565-4927 (English) and 800-565-0438 (French-Canadian).

Mfr. No.	Name	Zero Duplication or Recommended Industrial
21158-7174	GARLK	**472018***
21158-7177	GARLK	**416706!**
21158-7178	GARLK	55199*=
21158-7186	GARLK	**471760***
21158-7187	GARLK	**415483!**
21158-7192	GARLK	**415379**
21158-7192	GARLK	**415379!**
21158-7194	GARLK	**412473!**
21158-7196	GARLK	**415960!**
21158-7197	GARLK	**415995!**
21158-7197T2	GARLK	**415995!**
21158-7197T2	GARLK	**415995!**
21158-7198	GARLK	482089=
21158-7199	GARLK	**417487**
21158-7205	GARLK	**416153!**
21158-7206	GARLK	**415711***
21158-7210	GARLK	**455151***
21158-7215R1	GARLK	**471689!**
21158-7220	GARLK	**455191***
21158-7221	GARLK	**416313***
21158-7223	GARLK	**472319***
21158-7224	GARLK	**415001!**
21158-7226	GARLK	**474264**
21158-7229	GARLK	**455189***
21158-7230	GARLK	**415437**
21158-7230	GARLK	**415437!**
21158-7231	GARLK	**417354!***
21158-7233	GARLK	**415551***
21158-7238	GARLK	450104*
21158-7241	GARLK	**455406!***
21158-7245	GARLK	**415371***
21158-7247	GARLK	**417562***
21158-7248	GARLK	**473459**
21158-7249	GARLK	**415960!**
21158-7253	GARLK	**415027**
21158-7253	GARLK	**415027!**
21158-7254	GARLK	**473234**
21158-7254F1	GARLK	**473234!**
21158-7255	GARLK	**417351!**
21158-7258	GARLK	**416892!***
21158-7259	GARLK	**450133***
21158-7264	GARLK	**473446***
21158-7265	GARLK	**417362!***
21158-7269	GARLK	**415437**
21158-7269	GARLK	**415437!**
21158-7270	GARLK	**417181!***
21158-7272	GARLK	**472492!**
21158-7276	GARLK	**416077***
21158-7277	GARLK	**417474**
21158-7280	GARLK	**471821!**
21158-7282	GARLK	**416339**
21158-7282	GARLK	455031!
21158-7284	GARLK	**417539!***
21158-7285	GARLK	**411245!**
21158-7289	GARLK	**417191**
21158-7289	GARLK	456585
21158-7291	GARLK	**416891!***
21158-7292	GARLK	**417316!**
21158-7299	GARLK	**471529***
21158-7307	GARLK	**472164!**
21158-7313	GARLK	**418028**
21158-7313	GARLK	455137!
21158-7314	GARLK	55199*=
21158-7317	GARLK	**417562***
21158-7318	GARLK	**455406!***
21158-7320	GARLK	**471424!***
21158-7324	GARLK	**415027***
21158-7327	GARLK	**471887***
21158-7328	GARLK	**415995!**
21158-7328F1	GARLK	**415995!**
21158-7332	GARLK	**415027***
21158-7334	GARLK	**455144***
21158-7341F1	GARLK	**472475**
21158-7342	GARLK	**415645!**
21158-7342	GARLK	455104
21158-7346	GARLK	**451948***
21158-7347	GARLK	**415027**
21158-7347	GARLK	**415027!**
21158-7348	GARLK	417535*
21158-7349	GARLK	**475384***
21158-7350	GARLK	**415991**
21158-7350	GARLK	455146!
21158-7353	GARLK	**417601***
21158-7357	GARLK	**412473!**
21158-7364	GARLK	**455019!***
21158-7366	GARLK	**417550***
21158-7368	GARLK	**455480!***
21158-7370F1	GARLK	**472164!**
21158-7371	GARLK	**415551***
21158-7372	GARLK	**471808!***
21158-7372F1	GARLK	**471808!**
21158-7374	GARLK	**476470**
21158-7375	GARLK	**417596***
21158-7382	GARLK	**411253!**
21158-7386	GARLK	**472258!***
21158-7389	GARLK	**415379**
21158-7389	GARLK	**415379!**
21158-7390	GARLK	**471766!**
21158-7390F1	GARLK	**471766!**
21158-7402	GARLK	**415088!**
21158-7402	GARLK	**415088**
21158-7409	GARLK	**416107!**
21158-7409	GARLK	455073
21158-7418	GARLK	**415683***
21158-7419	GARLK	**476470**
21158-7420	GARLK	**472029***
21158-7423	GARLK	6936S
21158-7433	GARLK	**415072***
21158-7435	GARLK	472020*
21158-7436	GARLK	**415327***
21158-7439	GARLK	55199*=
21158-7440	GARLK	**415379**
21158-7440	GARLK	**415379!**
21158-7448	GARLK	**415036***
21158-7510	GARLK	**472311!**
21158-7516	GARLK	**474278!**
21158-7518	GARLK	**471766!**
21158-7523	GARLK	**471862***
21158-7542	GARLK	**417349***
21158-7542F1	GARLK	**417349!**
21158-7544	GARLK	**415437**
21158-7544	GARLK	**415437!**
21158-7549	GARLK	**413246**
21158-7551	GARLK	**415088!**
21158-7551	GARLK	**415088**
21158-7554	GARLK	**415683***
21158-7555	GARLK	**471984***
21158-7555F1	GARLK	**471984**
21158-7559	GARLK	**417356!**
21158-7559	GARLK	455188
21158-7560	GARLK	**416154!***
21158-7561	GARLK	**417602!***
21158-7562	GARLK	**415219***
21158-7563	GARLK	**472492!**
21158-7564	GARLK	**471271!**
21158-7566	GARLK	**416865!***
21158-7567F1	GARLK	**471192**
21158-7568	GARLK	**470625!**
21158-7568F1	GARLK	**470625!***
21158-7572	GARLK	**417316!**
21158-7574	GARLK	**415303!***
21158-7578	GARLK	**416153!**
21158-7590	GARLK	**472157!**
21158-7590	GARLK	**472157**
21158-7594	GARLK	**416271!***
21158-7603	GARLK	**416476!**
21158-7610	GARLK	**417549!***
21158-7611	GARLK	**417198***
21158-7612	GARLK	**415072***
21158-7615	GARLK	**415027!**
21158-7615	GARLK	**415027**
21158-7616	GARLK	**416332!**
21158-7626	GARLK	**417549!***
21158-7629	GARLK	**417562***
21158-7633	GARLK	**471887***
21158-7633F1	GARLK	**471887**
21158-7642	GARLK	**416294!***
21158-7646	GARLK	**473454**
21158-7649	GARLK	**472018***
21158-7652	GARLK	**417541***
21158-7653	GARLK	**415076***
21158-7659	GARLK	**415034!**
21158-7668	GARLK	**417316!**
21158-7669	GARLK	**417298***
21158-7670	GARLK	**476470**
21158-7671	GARLK	**415259!***
21158-7677	GARLK	**472319***
21158-7684	GARLK	**473234**
21158-7685	GARLK	**415938***
21158-7686	GARLK	**415041***
21158-7687	GARLK	**481792**
21158-7689	GARLK	**416158***
21158-7690	GARLK	**415187***
21158-7695	GARLK	**474281!**
21158-77	GARLK	**471532***
21158-7700	GARLK	**413246**
21158-7717	GARLK	**417171!***
21158-7722	GARLK	**472157**
21158-7722	GARLK	**472157!**
21158-7723	GARLK	**472636!**
21158-7745	GARLK	**417556***
21158-7746	GARLK	450908=
21158-7747	GARLK	**417484!**
21158-7749	GARLK	417534*
21158-7752	GARLK	**471760***
21158-7758	GARLK	**417601***
21158-7759	GARLK	**457874**
21158-7764	GARLK	**416273!**
21158-7765	GARLK	**418028**
21158-7765	GARLK	455137!
21158-7767	GARLK	**471829**
21158-7768	GARLK	**450307***
21158-7772	GARLK	455820*
21158-7774	GARLK	**415227!***
21158-7775	GARLK	455556*
21158-7776	GARLK	**415458!**
21158-7776F1	GARLK	**415458!**
21158-7780	GARLK	**415128***
21158-7783	GARLK	**417604***
21158-7784	GARLK	**417181!***
21158-7785	GARLK	**455123***
21158-7786	GARLK	**455123***
21158-7787	GARLK	**417351!**
21158-7791	GARLK	**416339**
21158-7791	GARLK	455031!
21158-7795	GARLK	**417247!***
21158-7796	GARLK	**455584***
21158-78	GARLK	**471532**
21158-7803	GARLK	**415196!***
21158-7812	GARLK	**416345!**
21158-7812	GARLK	455033
21158-7814	GARLK	**415035**
21158-7819	GARLK	**416167!**
21158-7824	GARLK	**415090***
21158-7825	GARLK	**417597***
21158-7829	GARLK	**416664!**
21158-7829F1	GARLK	**416664!**
21158-7837	GARLK	417513*
21158-7839	GARLK	**417252***
21158-7840	GARLK	55357*
21158-7842	GARLK	472020*
21158-7846	GARLK	482089=
21158-7861	GARLK	**415196!***
21158-7864	GARLK	450285*
21158-7873	GARLK	**473231**
21158-7877	GARLK	**415066***
21158-7879	GARLK	417780*
21158-7880	GARLK	416556!
21158-7880	GARLK	**472157**
21158-79	GARLK	**473405***
21158-7907	GARLK	470950!
21158-7907	GARLK	6241S
21158-7909	GARLK	**417602!***
21158-7915	GARLK	**471835!**
21158-7922	GARLK	55223*=
21158-7934	GARLK	55469*
21158-7937	GARLK	2081
21158-7941	GARLK	455509*
21158-7993	GARLK	**417273***
21158-80	GARLK	**473405**
21158-8063	GARLK	**350974!**
21158-8067	GARLK	**472644**
21158-8074	GARLK	**471827!***
21158-8081	GARLK	**450819***
21158-81	GARLK	**471558**
21158-8102	GARLK	455556*
21158-8104	GARLK	**472299***
21158-8111	GARLK	**417196!***
21158-8112	GARLK	**417511**
21158-8117	GARLK	**415023**
21158-8120	GARLK	**415371***
21158-8127	GARLK	**416891!***
21158-8128	GARLK	**417355!***
21158-8129	GARLK	**470774!**
21158-8131	GARLK	450285*
21158-8140	GARLK	**455462***
21158-8151	GARLK	**415991**
21158-8151	GARLK	455146!
21158-8153	GARLK	**415458!**
21158-8154	GARLK	**416404!***
21158-8156	GARLK	**417171!***
21158-8161	GARLK	**415045!***
21158-8165	GARLK	**415066***
21158-8169	GARLK	**457874***
21158-8173	GARLK	**416077***
21158-8187	GARLK	**472475***
21158-8187R1	GARLK	**472475**
21158-8188	GARLK	**455019!***
21158-8192	GARLK	**417273***
21158-82	GARLK	**471558***
21158-8205	GARLK	**417596**
21158-8208	GARLK	417513*
21158-8213	GARLK	**472636!**
21158-8214	GARLK	455820*
21158-8222	GARLK	**417621!**
21158-8224	GARLK	**455191***
21158-8231	GARLK	**417191**
21158-8231	GARLK	456585
21158-8233	GARLK	**476470***
21158-8238	GARLK	**417606***
21158-8243	GARLK	**415072***
21158-8245	GARLK	**417487**
21158-8248	GARLK	470950!
21158-8248	GARLK	6241S
21158-8251	GARLK	**417596***
21158-8252	GARLK	**415294!**
21158-8262	GARLK	**415124***
21158-8265	GARLK	**481792***

! Industrial Size/Type * Minor Width Difference

= The U.S. customer service number is 877-4-TIMKEN. The Canadian customer service numbers are 800-565-4927 (English) and 800-565-0438 (French-Canadian).

Mfr. No.	Name	Zero Duplication or Recommended Industrial
21158-8266	GARLK	473444
21158-8270	GARLK	410308 !
21158-8274	GARLK	473239
21158-8278	GARLK	416153 !
21158-8280	GARLK	415379
21158-8280	GARLK	415379 !
21158-8284	GARLK	474256
21158-8292	GARLK	473458 ! *
21158-8293	GARLK	473238 ! *
21158-8300	GARLK	415327 *
21158-8306	GARLK	416107 !
21158-8306	GARLK	455073
21158-8309	GARLK	417538 *
21158-8310	GARLK	417539 ! *
21158-8311	GARLK	415437
21158-8311	GARLK	415437 !
21158-8312F1	GARLK	471750 !
21158-8328	GARLK	455197N *
21158-8330	GARLK	416154 ! *
21158-8331	GARLK	417258 *
21158-8353	GARLK	476535
21158-8384	GARLK	415867 *
21158-8396	GARLK	415937 ! *
21158-8400	GARLK	415142 *
21158-8401	GARLK	473454
21158-8404	GARLK	413469 ! *
21158-8409	GARLK	471633 ! *
21158-8410	GARLK	417512 *
21158-8416	GARLK	410737 !
21158-8417	GARLK	455584 *
21158-8419	GARLK	415138 ! *
21158-8423	GARLK	415072 *
21158-8430	GARLK	456105 *
21158-8437	GARLK	55301S *
21158-8442	GARLK	417252 *
21158-8443	GARLK	416229 *
21158-8460	GARLK	416891 ! *
21158-8462	GARLK	415090 *
21158-8466	GARLK	417509 *
21158-8469	GARLK	415871 *
21158-8470	GARLK	417159 *
21158-8471	GARLK	417556 *
21158-8477	GARLK	455026 *
21158-8488	GARLK	455566 *
21158-8494	GARLK	415482 *
21158-8498	GARLK	471341 !
21158-8521	GARLK	412040 *
21158-8529	GARLK	417597 *
21158-8530	GARLK	416664 !
21158-8551	GARLK	416149 *
21158-8556	GARLK	417507 *
21158-8560	GARLK	417604 *
21158-8566	GARLK	455576 ! *
21158-8569	GARLK	471818 *
21158-8570	GARLK	415263 *
21158-8571	GARLK	413248
21158-8572	GARLK	472029 *
21158-8573	GARLK	415001 !
21158-8579	GARLK	417601 *
21158-8585	GARLK	415072 *
21158-8591	GARLK	415871 *
21158-8592	GARLK	417211 ! *
21158-8596	GARLK	455584 *
21158-8608	GARLK	455022 *
21158-8628	GARLK	417542 *
21158-8629	GARLK	417539 ! *
21158-8631	GARLK	416167 !
21158-8633	GARLK	416154 ! *
21158-8635	GARLK	455197N *
21158-8636	GARLK	415196 ! *
21158-8638	GARLK	417205 ! *
21158-8640	GARLK	415984 ! *
21158-8643	GARLK	472572 !
21158-8646	GARLK	450068 *
21158-8652	GARLK	50254 * =
21158-8657	GARLK	417262 !
21158-8662	GARLK	417020 *
21158-8663	GARLK	417541 *
21158-8665	GARLK	417603 ! *
21158-8668	GARLK	455685 *
21158-8676	GARLK	417159
21158-8678	GARLK	417366 ! *
21158-8679	GARLK	455151 *
21158-8680	GARLK	415227 ! *
21158-8681	GARLK	417501 *
21158-8682	GARLK	470645 *
21158-8683	GARLK	417511 *
21158-8696	GARLK	417485 *
21158-8697	GARLK	417509 *
21158-8698	GARLK	455297 *
21158-87	GARLK	471466 !
21158-8700	GARLK	418028
21158-8700	GARLK	455137 !
21158-8704	GARLK	470625 !
21158-8705	GARLK	480281 !
21158-8708	GARLK	417780 *
21158-8712	GARLK	415645 !
21158-8712	GARLK	455104
21158-8724	GARLK	473463 *
21158-8726	GARLK	417349 *
21158-8728	GARLK	470605 ! *
21158-8731	GARLK	417356 !
21158-8731	GARLK	455188
21158-8732	GARLK	473239
21158-8734	GARLK	471820 *
21158-8736	GARLK	415072 *
21158-8738	GARLK	470565 ! *
21158-8744	GARLK	417357
21158-8744	GARLK	455192 !
21158-8745	GARLK	416891 ! *
21158-8747	GARLK	415867 *
21158-8752	GARLK	417362 ! *
21158-8755	GARLK	55223 * =
21158-8756	GARLK	417020 *
21158-8757	GARLK	417494 *
21158-8758	GARLK	417020 *
21158-8775	GARLK	417298 *
21158-8778	GARLK	416163 *
21158-8780	GARLK	415991
21158-8780	GARLK	455146 !
21158-8787	GARLK	415259 ! *
21158-8790	GARLK	473441 *
21158-8797	GARLK	413247 !
21158-8819	GARLK	455406 ! *
21158-8824	GARLK	417254 *
21158-8825	GARLK	416891 ! *
21158-8828	GARLK	455462 *
21158-8830	GARLK	415559 *
21158-8833	GARLK	416664 !
21158-8836	GARLK	417171 ! *
21158-8845	GARLK	417541 *
21158-8846	GARLK	417547 *
21158-8847	GARLK	417497 *
21158-8848	GARLK	410987 ! *
21158-8856	GARLK	417537 *
21158-8864	GARLK	418028
21158-8864	GARLK	455137 !
21158-8868	GARLK	417605 *
21158-8870	GARLK	415683 *
21158-8875	GARLK	50327 *
21158-8881	GARLK	416556 !
21158-8881	GARLK	472157
21158-8886	GARLK	470596 *
21158-8887	GARLK	471413
21158-8903	GARLK	417191
21158-8903	GARLK	456585
21158-8904	GARLK	416107 !
21158-8904	GARLK	455073
21158-8907	GARLK	415045 ! *
21158-8912	GARLK	417542 *
21158-8917	GARLK	415090 *
21158-9009	GARLK	471688 *
21158-9013	GARLK	352541 *
21158-9093F1	GARLK	470605 !
21158-91	GARLK	471255 !
21158-9234F1	GARLK	473445
21158-93	GARLK	471564
21158-9345	GARLK	471733
21158-94	GARLK	471564 *
21158-9481	GARLK	417486
21158-95	GARLK	471612
21158-9501	GARLK	330385 !
21158-9515	GARLK	471267 ! *
21158-96	GARLK	471612
21158-9633	GARLK	480281 !
21158-97	GARLK	481528
21158-98	GARLK	481528
21158-9833F1	GARLK	471192
21158-9943F1	GARLK	471829
211580121	GARLK	470506 !
211580169	GARLK	474273
211580214	GARLK	450398
211580214	GARLK	471267 !
211580220	GARLK	471646 !
211580287	GARLK	471224 !
211580294	GARLK	471689 !
211580296	GARLK	450593 !
211580351	GARLK	471652
211580352	GARLK	471652
211580357	GARLK	470712 !
211580358	GARLK	470712 !
211580361	GARLK	471785 !
211580362	GARLK	471785 !
211580387	GARLK	471765 !
211580388	GARLK	471765 !
211580394	GARLK	473205
211580397	GARLK	474255
211580398	GARLK	474255
211580399	GARLK	474255
211580424	GARLK	471750 !
211580425	GARLK	471750 !
211580426	GARLK	471750 !
211580430	GARLK	471787 !
211580431	GARLK	471787 !
211580436	GARLK	471795
211580437	GARLK	471795
211580438	GARLK	471795
211580439	GARLK	450165
211580439	GARLK	471801 !
211580440	GARLK	450165
211580440	GARLK	471801 !
211580441	GARLK	450165
211580441	GARLK	471801 !
211580484	GARLK	450129
211580484	GARLK	472826 !
211580485	GARLK	450129
211580485	GARLK	472826 !
211580541	GARLK	471192
211580542	GARLK	471192
211580543	GARLK	471192
211580646	GARLK	470059
211580646	GARLK	470380 !
211580647	GARLK	470059
211580647	GARLK	470380 !
211580648	GARLK	470059
211580648	GARLK	470380 !
211580661	GARLK	470487 !
211580778	GARLK	474274
211580780	GARLK	474274
211584483	GARLK	415442 !
211584483	GARLK	55442
211584662	GARLK	470506 !
211584704	GARLK	471785 !
211584842	GARLK	471472 !
2115850	GARLK	471442 !
211585713	GARLK	473227
211586	CLARK	473214 !
211586430	GARLK	471785 !
211586457	GARLK	450129
211586457	GARLK	472826 !
211586479	GARLK	471192
211586580	GARLK	450593 !
211586637	GARLK	471466 !
211586667	GARLK	470059
211586667	GARLK	470380 !
211586674	GARLK	471795
211586675	GARLK	450165
211586675	GARLK	471801 !
211586749	GARLK	471255 !
211586856	GARLK	471255 !
211586993	GARLK	471765 !
2115871	GARLK	471551 !
211587137	GARLK	470059
211587137	GARLK	470380 !
211587176	GARLK	471192
211587195	GARLK	480630 !
2115872	GARLK	471551 !
211587262	GARLK	474274
211587358	GARLK	471646 !
211587391	GARLK	474255
211587447	GARLK	470059
211587447	GARLK	470380 !
211587661	GARLK	471192
211587675	GARLK	471787 !
211587831	GARLK	471646 !
211588135	GARLK	473227
211588267	GARLK	471551 !
211588272	GARLK	471472 !
211588275	GARLK	450165
211588275	GARLK	471801 !
211588314	GARLK	471765 !
211588342	GARLK	450557
211588342	GARLK	471255 !
2115888	GARLK	471466 !
211588879	GARLK	450593 !
2115892	GARLK	471255 !
21159	C-R	8430S *
21160	C-R	472015 ! *
2116025	ITM	1180
2116025	ITM	41X55X7 !
2116085	ITM	1214
2116085	ITM	1214N
2116112	ITM	1174
2116112	ITM	38X52X8.5 !
2116177	ITM	224235
2116177	ITM	42X58X7 !
2116179	ITM	35X50X8 !
2116179	ITM	3771
21162	C-R	472015 !
2116201	ITM	224520
2116201	ITM	45X60X10 !
2116205	ITM	1994
2116205	ITM	48X70X9 !
2116213	ITM	223542
2116213	ITM	35X55X11 !
2116247	ITM	1174
2116247	ITM	38X52X8.5 !
2116298	ITM	224270

! Industrial Size/Type * Minor Width Difference

= The U.S. customer service number is 877-4-TIMKEN. The Canadian customer service numbers are 800-565-4927 (English) and 800-565-0438 (French-Canadian).

Mfr. No.	Name	Zero Duplication or Recommended Industrial
2116298	ITM	42X72X10!
21163	C-R	**472015**!
21163	CONTI	**471103**!
2116304	ITM	1012
2116304	ITM	1012N
2116304	ITM	45X62X8!
2116327	ITM	227040
2116327	ITM	70X90X10!
2116366	ITM	224015
2116366	ITM	40X52X7!
2116367	ITM	224045
2116367	ITM	40X62X12!
2116373	ITM	1174
2116373	ITM	38X52X8.5!
2116374	ITM	1181
2116374	ITM	41X56X7!
2116376	ITM	224045
2116376	ITM	40X62X12!
2116387	ITM	222510
2116387	ITM	25X35X7!
2116410	ITM	224470
2116410	ITM	44X72X10!
2116428	ITM	224820
2116428	ITM	48X62X8!
2116450	GMC	5M466
2116470	ITM	223430
2116470	ITM	710417
2116475	ITM	223830
2116475	ITM	38X55X7!
2116478	ITM	224045
2116478	ITM	40X62X12!
2116492	ITM	1955
2116492	ITM	52X65X9!
2116502	ITM	**1213N**
2116505	ITM	228020
2116505	ITM	80X105X13!
2116539	ITM	225020
2116539	ITM	50X68X8!
21167	C-R	**472015***
21168	C-R	**472015**!
2116807	GMC	417267
2117057	GMC	**473449**
2117058	GMC	**472164**!
2117093	ITM	1955
2117093	ITM	52X65X9!
21171	C-R	**472015**
2117109	ITM	**1213N**
21172	C-R	**472015**!
21172	C-R	**472015***
21173	C-R	**472015**!
21174	C-R	8430S
21175	C-R	8430S
211751	ALLCH	55386
2117514	ITM	224570
2117514	ITM	45X72X12!
2117517	ITM	2001
2117517	ITM	60X82X12!
2117531	ITM	1174
2117531	ITM	38X52X8.5!
2117538	ITM	225005
2117538	ITM	50X62X7!
2117549	ITM	1953
2117549	ITM	42X60X7!
2117555	ITM	225420
2117555	ITM	54X72X10!
2117560	ITM	224820
2117560	ITM	48X62X8!
2117561	ITM	223605
2117561	ITM	36X50X7!
2117591	ITM	225110
2117591	ITM	51X65X7!
2117594	ITM	224255
2117594	ITM	42X65X10!
2117614	ITM	225230
2117614	ITM	52X72X8!
2117623	ITM	224252
2117623	ITM	42X62X8!
2117625	ITM	224252
2117625	ITM	42X62X8!
2117748	ITM	224520
2117748	ITM	45X60X10!
2117787	ITM	225010
2117787	ITM	50X65X8!
21178	C-R	**472015**!*
2117909	ITM	225020
2117909	ITM	50X68X8!
2117925	ITM	223830
2117925	ITM	38X55X7!
2117926	ITM	227550
2117926	ITM	75X100X12!
2117929	ITM	225230
2117929	ITM	52X72X8!
2117953	ITM	1969
2117953	ITM	48X63X9!
2117955	ITM	224820
2117955	ITM	48X62X8!
2117963	ITM	1953
2117963	ITM	42X60X7!
2117966	ITM	225020
2117966	ITM	50X68X8!
2117968	ITM	1956
2117968	ITM	224820
2117968	ITM	48X62X8!
2117971	ITM	226285
2117971	ITM	62X85X8!
2117975	ITM	226285
2117975	ITM	62X85X8!
2117979	ITM	1012
2117979	ITM	1012N
2117979	ITM	45X62X8!
2117985	ITM	1012
2117985	ITM	1012N
2117985	ITM	45X62X8!
2117988	ITM	1012
2117988	ITM	1012N
2117988	ITM	45X62X8!
2117990	ITM	224045
2117990	ITM	40X62X12!
2117993	ITM	1187
2117993	ITM	47X68X10!
21182	C-R	**472015**!
21183	C-R	**472015**!
2118530	GMC	**471570**!
21186	C-R	**472015**!
21188	C-R	**472015**!
211889	BENDI	**480210**!
2119019	GMC	**411500**
21192	C-R	**410308**!*
2119402	GMC	**471103**!
211959	ALLCH	55309=
21196	C-R	**410308**!
21197	C-R	**410308**!
2119728	GMC	**471689**!
211985	US-EL	**417555**!
212	C-R	5414
212	UNIVE	**417316**!
212-10902	ITM	1953+304
212-11301	ITM	1984+30204+30206
212-11506	ITM	1180+88506-BR$
212-11506	ITM	41X55X7+88506-BR!$
212-13503	ITM	224045+30304+30305
2120	HWY	455472=
21200631	ROCKW	HU009A
212011	WILYS	6489
21203	C-R	473468
2120319	GMC	**471646**!
21205	C-R	**410308**!
21205	C-R	473468
2120631	ROCKW	HU009A
21207	C-R	**410308**!
21207	C-R	473468
21209	C-R	**410308**!
212098R1	IH	3592
212098R91	IH	3592
2121	CLIN	**471267**!
21210	C-R	**410308**!
21210	C-R	473468*
2121091011	GMC	55367=
21211	C-R	**410308**!
21211	C-R	473468*
212110	C-R	**473211**!
212111	C-R	473436
2121111	GMC	55367=
212112	C-R	**471192**
212112	GOODM	**471192**
212112M1	C-R	**471192**
212113	C-R	50126
2121133	GMC	**471224**
212114	C-R	**473224**!
2121144	GMC	**471887**
212116	C-R	**473227**
212116M1	C-R	**473227**
212118	C-R	**473517**!
21213	C-R	**410308**!
21213505	ITM	1012
21213505	ITM	1012N
21213507	ITM	1012
21213507	ITM	1012N
21214	C-R	**481792**
21215	C-R	**450362**
21216	C-R	**473205**
2121626	GMC	**416404**!
2121632	GMC	**416654**
2121633	GMC	**415001**!
2121634	GMC	**416654**
21216M1	C-R	**473205**
21218	C-R	**471795**
21218M1	C-R	**471795**
21219	C-R	**473211**!
2122	WHITE	5778
21220	C-R	**410308**!
2122016	GMC	**471820**
2122063	GMC	45031S
212227	CUMMI	**417621**
21224	GARLK	**471413**!
212257R91	IH	**417134**
21226	C-R	**472016**
2122674	GMC	**417316**!
2122701	GMC	**416892**
2122717	GMC	355200
2122717	GMC	**416888**!
2122717	MOHWK	**416888**!
2122718	GMC	**416892**
21228	C-R	**472016**!
212289	BENDI	**471795**
2122910	GMC	**417181**!
2122914	GMC	**415991**
2122914	GMC	455146!
21230	C-R	**472016**!
212304R91	IH	**457291**
2123186	GMC	**417487**
2123186	GMC	**417487**!
2123186	WHITE	**417487**!
2123186	WHITE	**417487**
2123199	GMC	**472636**!
21232	C-R	**472016**!
21232	GARLK	**471737**
212325	UNIVE	**413246**
212335	MICH	**412119**!
212335	UNIVE	**412119**!
21234	C-R	**472016**!
212348	MICH	**410987**!
21235	C-R	**472016**!
212350	MICH	**416271**!
212350	UNIVE	**416271**!
212354	UNIVE	**412861**
212362	UNIVE	**410825***
21237	C-R	**472016**
21238	C-R	**472016**
21238-3921	GARLK	**417601***
21238-3926	GARLK	**417602**!*
21238-3938	GARLK	**417604***
21238-3944	GARLK	**417567***
21238-3952	GARLK	**415128***
21238-3953	GARLK	455129*
21238-3954	GARLK	**455462***
21238-3955	GARLK	**415090***
21238-3962	GARLK	55218*=
21238-3968	GARLK	**415219***
21238-3984	GARLK	**417606***
21238-3985	GARLK	55078S*
21238-3997	GARLK	**417020***
21238-3998	GARLK	**417020***
21238-4009	GARLK	**417570***
21238-4017	GARLK	**415227**!*
21238-4031	GARLK	55228*=
21238-4036	GARLK	**415482***
21238-4057	GARLK	**415077**
21238-4063	GARLK	**415076***
21238-4072	GARLK	**417608**
21238-4499	GARLK	**415124***
21238-4500	GARLK	**417022***
21238-4610	GARLK	415871
21240	C-R	**472016**!*
2124223	GMC	**416288**
2124461	CHRYS	**471827**!
21245	C-R	**472016***
21246	GARLK	**471766**!
2124705	CHRYS	331228H
2124OS	JN-MN	**415995**!
212522	WAYNE	**470487**!
21254	C-R	**472016**
21255	C-R	**472016**
21256	C-R	**472016**
212561	BENDI	**471766**!
21258	C-R	476535
21259	C-R	**472409**!
21260	C-R	**472409**!
212603	CUMMI	**330385**!
212608M1	MASSE	**472299**
21262	GARLK	**471795**
212620	BRCWY	**417344**!
21265	C-R	**472409**!*
21266	C-R	**472409**!
21267	C-R	**472409**!
21269	C-R	**472409***
21270	C-R	**472409**
21270	LEECE	**471763**
21271	LEECE	**471684**!
212735	BENDI	**471689**!
212735	FORD	**471689**!
21273TB	TRSCM	**473204**
21274	C-R	**472409**!
21275	C-R	**472409**!
21276	C-R	**472409***
212794R91	IH	455310
21281	C-R	225450*

! Industrial Size/Type * Minor Width Difference $ F-M Number Is Part Of A Kit
= The U.S. customer service number is 877-4-TIMKEN. The Canadian customer service numbers are 800-565-4927 (English) and 800-565-0438 (French-Canadian).

Mfr. No.	Name	Zero Duplication or Recommended Industrial
21281	C-R	710203
21282	C-R	**472409**!
21282VB	TRSCM	40566S
21283SSB	TRSCM	**470898**!
21284F	OSHKO	**415938**
21284SA	TRSCM	**470898**
21284TA	TRSCM	**470898**!
21284TB	TRSCM	**470898**
21286	C-R	**472409***
212893R91	IH	6403=
212908	WAUKE	**471649**!
21294	C-R	5682
21294SA	TRSCM	**473467**
21296	C-R	**472409**!
212965	BENDI	**471571**
212968	WAUKE	**471652**
21297	C-R	**472409**!
212978	WAUKE	**472636**!
21299	C-R	**473243**
212996	GWI	**472924**!
2129D	GOODM	**415458**!
212A124X04	TROS	8133S
212A131X04	TROS	8597S
212B112	C-R	**471192**
212CHA112	C-R	**471192**
212D112	C-R	**471192**
212W112	C-R	**471192**
212W112M1	C-R	**471192**
212W16	C-R	**473205**
212W16M1	C-R	**473205**
212W18	C-R	**471795**
212W18M1	C-R	**471795**
212W350	CONE	5521
212Z18	C-R	**471795**
213	C-R	5650
213	UNIVE	**417485***
21300	C-R	**473243**
213006	HYST	343186
213009	ALLCH	450516
21302	C-R	**473243***
21302	C-R	**473243**!
21302VH	TRSCM	8430S
21303	C-R	**413248**=
21303	C-R	**413248**
21303TA	TRSCM	**472015**!
21304	C-R	**473243**
21304VSA	TRSCM	**472015**
21305	C-R	**473243**
213065TA	TRSCM	**410308**
213065TB	TRSCM	**410308**
213065TB	TRSCM	473468
213070R91	IH	5472$=
213074	ALLCH	**471652**
213075	ALLCH	6863S!
2130D	GOODM	**417343**!
2130RC	SUL	**417512**
21314SA	TRSCM	**472016**
21315	C-R	**450362***
21316	C-R	225420
21316	C-R	54X72X10!
21318	C-R	225420
21318	C-R	54X72X10!
21318	C-R	54X73X8!*
213183TB	TRSCM	**472409**!
2131D	GOODM	**415007**
2131RC	SUL	**415551**
2132	HWY	**417518**
21320	C-R	**470898**
21320	C-R	54X73X8!
213217	ALLCH	**415995**!
21325	C-R	**413469**!
21326	C-R	**413469**!
21327	C-R	710438
21329	C-R	**413469**!
213337TA	TRSCM	**413470**!
21334A	MASSE	6336S
21334TB	TRSCM	**413470**!
213354	FWD	6663S
21336	C-R	**413469**!*
21337	C-R	40097S
21341	C-R	**413469**!*
21342	C-R	**413469**!*
21345	C-R	**472409**!
21345	C-R	54X81X8!*
21346	C-R	**413469**!
21348	GARLK	**472258**!
21350	C-R	**413470**!
21352	C-R	**413470**!
21353	C-R	**413470**!
21354	C-R	6380
21356	C-R	**416267**!
21358	C-R	**415349***
21360	C-R	**415349***
21360	GARLK	**471192**
21361	C-R	225460
21368	GARLK	**473214**!
2136OS	JN-MN	**416345**!
2136OS	JN-MN	455033
2137005	GMC	**471103**!
213712	SPERY	**472258**!
2137252	GMC	**327303**!
2137274	GMC	6922=
213741	ALLCH	**471766**!
21378	C-R	**455080***
21378	GARLK	**473215**!
21379	C-R	**455080**
2137OS	JN-MN	55028*
21385	C-R	55087=
213895	ALLCH	**470334**!
21390	C-R	6180=
2139445	GMC	**418028**
2139445	GMC	455137!
2139446	GMC	**415991**
2139446	GMC	455146!
2139447	GMC	**415027**
213W112	C-R	**471192**
213W112M1	C-R	**471192**
214	C-R	5127
214	UNIVE	**417158**!
21400	C-R	8312
214017	CLARK	**472164**!
214077	CLARK	**471224**!
214083	ALLCH	**473235**!
214085	CLARK	**412920**!
214097	ALLCH	**471231**!
214143	CLARK	**415035**
214161	CLARK	**417238**=
2141654	GMC	**471766**!
2143	WHITE	**473228**
2143265	GMC	**472636**!
214335	UNIVE	**411500***
214348	MICH	450104
214350	MICH	**411245**!
214350	UNIVE	**411245**!
214354	MICH	**417073**
214354	UNIVE	**417073**
214400	ALLCH	**472397**!
2144138	GMC	**330385**!
214439	WILYS	**470954**!
214472	ALLCH	**473214**!
21454	GARLK	**473227**!
214556	CLARK	455197N
214566	CLARK	455197N
21462	GARLK	**470625**!
214631	SPICE	**472015**!
214687	CLARK	**476470**
214689	KRSE	6603*=
214701	CLARK	50199S!
214701	CLARK	6863S!
214706	CLARK	**473229**
21472	GARLK	**470380**!
21472VA	IH	**473460**
214784	ALLCH	**471765**!
214821	BRCWY	**473228**
214826	BRCWY	**471689**!
214863680	GARLK	7639S
21492	GARLK	**473228**!
214941	CLARK	456967N=
214941	CLARK	456967V!
2149423	GMC	475348N
2149674	GMC	**472164**!
2149740	GMC	**472164**!
21498	GARLK	**473228**!
214995	CLARK	**417262**!
215	GARLK	**471570**!
215	UNIVE	**416654**!
2150	WHITE	421
2150348	GMC	**415991**
2150348	GMC	455146!
21503D	IH	**412119**!
2150563	GMC	**415371**
2151090	GMC	**417485**
2151HC	SPG	2151H=
21523	FMC	**413247**!
21525	C-R	40566S
21527-0113	GARLK	**471553**!
21527-0115	GARLK	**471579**
21527-0119	GARLK	**471642**
21527-0145	GARLK	**471498***
21527-0149	GARLK	**471684**!
21527-0151	GARLK	450033
21527-0153	GARLK	**470390**
21527-0213	GARLK	**471267**!
21527-0217	GARLK	**471633**!*
21527-0221	GARLK	**470590**
21527-0227	GARLK	481741=
21527-0289	GARLK	**473380***
21527-0323	GARLK	**471651**
21527-0325	GARLK	**471705**!
21527-0327	GARLK	**473419**!
21527-0333	GARLK	**471762**!
21527-0355	GARLK	**476838**!
21527-0357	GARLK	**470712**!
21527-0359	GARLK	**471763**
21527-0361	GARLK	**471785**!
21527-0383	GARLK	**472475**
21527-0384	GARLK	**472475**
21527-0385	GARLK	**473426**
21527-0387	GARLK	**471765**!
21527-0427	GARLK	**471766**!
21527-0442	GARLK	**471808**!
21527-0451	GARLK	**473424**!
21527-0535	GARLK	**470774**!
21527-0541	GARLK	**471192**
21527-0544	GARLK	**473214**
21527-0547	GARLK	**473215**!
21527-0550	GARLK	470950!
21527-0550	GARLK	6241S
21527-0556	GARLK	**471835**!
21527-0592	GARLK	**473224**!
21527-0595	GARLK	**473016**!
21527-0598	GARLK	**473225**!
21527-0643	GARLK	**470625**!
21527-0645	GARLK	**471818**
21527-0655	GARLK	**473228**
21527-0664	GARLK	**473440**!
21527-0700	GARLK	**472213**
21527-0703	GARLK	**472299**
21527-0706	GARLK	**471821**!
21527-0712	GARLK	**473229**
21527-0715	GARLK	**470682**
21527-0718	GARLK	**471316**
21527-0739	GARLK	**482253**
21527-0760	GARLK	**473231**
21527-0763	GARLK	**473367**!
21527-0763	GARLK	**473367**
21527-0769	GARLK	**473010**
21527-0772	GARLK	**473232**
21527-0775	GARLK	**481864**
21527-0787	GARLK	**473444**
21527-0826	GARLK	**473233**!
21527-0835	GARLK	**473234**
21527-0838	GARLK	**473235**!
21527-0844	GARLK	**473236**!
21527-0859	GARLK	**471981**
21527-0899	GARLK	**471504**!
21527-0907	GARLK	**472185**!
21527-0910	GARLK	**470334**!
21527-0913	GARLK	**472179**
21527-0922	GARLK	**471141**!
21527-0925	GARLK	**473448**
21527-0928	GARLK	**471984**
21527-0931	GARLK	**473313**
21527-1042	GARLK	**472439**
21527-1045	GARLK	**471868**
21527-1048	GARLK	**472572**!
21527-1051	GARLK	**473179**!
21527-1057	GARLK	**473238**
21527-1063	GARLK	**473239**!
21527-1066	GARLK	**473457**!
21527-1069	GARLK	**473240**!
21527-1075	GARLK	**473458**!
21527-1114	GARLK	**472319**
21527-1117	GARLK	**473459**
21527-1120	GARLK	**473241**
21527-1129	GARLK	**472144**!
21527-1132	GARLK	**473460**
21527-1135	GARLK	**472394**
21527-1198	GARLK	**472924**!
21527-1204	GARLK	**472397**!
21527-1207	GARLK	**473463**
21527-1210	GARLK	**473242**
21527-1252	GARLK	**451948**
21527-1270	GARLK	**416738**!
21527-1270	GARLK	450096
21527-1321	GARLK	**470898**=
21527-1324	GARLK	**473467**
21527-1327	GARLK	**472015**!
21527-1333	GARLK	**472016**
21527-1339	GARLK	**472409**!
21527-1345	GARLK	**473243**
21527-1402	GARLK	**472018**
21527-1405	GARLK	**473471**
21527-1408	GARLK	472020
21527-1414	GARLK	**470354**
21527-1420	GARLK	**473245**!
21527-1426	GARLK	**413472**
21527-1432	GARLK	**416268**
21527-1471	GARLK	**471341**!
21527-1474	GARLK	**471272**!
21527-1480	GARLK	**471138**!
21527-1486	GARLK	**410737**!
21527-1492	GARLK	**472636**!
21527-1498	GARLK	**412920**!
21527-1504	GARLK	**411376**!
21527-1654	GARLK	**413246**
21527-1657	GARLK	**412119**!
21527-1660	GARLK	**413247**!

! Industrial Size/Type * Minor Width Difference $ F-M Number Is Part Of A Kit
= The U.S. customer service number is 877-4-TIMKEN. The Canadian customer service numbers are 800-565-4927 (English) and 800-565-0438 (French-Canadian).

Mfr. No.	Name	Zero Duplication or Recommended Industrial
21527-1666	GARLK	416271!
21527-1669	GARLK	412861
21527-1678	GARLK	417480!
21527-1723	GARLK	471887
21527-1738	GARLK	411500
21527-1747	GARLK	411245!
21527-1750	GARLK	417073
21527-1801	GARLK	472029
21527-1807	GARLK	471271!
21527-1813	GARLK	470605!
21527-1819	GARLK	415449!
21527-1825	GARLK	416273
21527-1888	GARLK	455311*
21527-1933	GARLK	413248
21527-1939	GARLK	415483
21527-1945	GARLK	415458!
21527-1948	GARLK	417343!
21527-1951	GARLK	415007
21527-2035	GARLK	416664!
21527-2038	GARLK	417484!
21527-2041	GARLK	415984!
21527-2044	GARLK	417316!
21527-2047	GARLK	415960
21527-2050	GARLK	416706!
21527-2118	GARLK	417344!
21527-2121	GARLK	417158!
21527-2146	GARLK	416956
21527-2152	GARLK	416654!
21527-2168	GARLK	417349!
21527-2171	GARLK	417350!
21527-2174	GARLK	415995!
21527-2177	GARLK	417351!
21527-2249	GARLK	456105
21527-2257	GARLK	455336
21527-2261	GARLK	417490
21527-2267	GARLK	455022
21527-2270	GARLK	476470!
21527-2270	GARLK	476470
21527-2273	GARLK	417181!
21527-2276	GARLK	418028
21527-2279	GARLK	417353!
21527-2294	GARLK	455328
21527-2366	GARLK	415991
21527-2366	GARLK	415991!
21527-2369	GARLK	417196!
21527-2375	GARLK	417198
21527-2417	GARLK	416332!
21527-2420	GARLK	415937!
21527-2426	GARLK	416125!
21527-2432	GARLK	417499
21527-2433	GARLK	417355!
21527-2435	GARLK	415832
21527-2438	GARLK	417500
21527-2462	GARLK	415379
21527-2465	GARLK	417205!
21527-2468	GARLK	416339
21527-2537	GARLK	415035
21527-2540	GARLK	417356!
21527-2543	GARLK	417357
21527-2546	GARLK	416130!
21527-2555	GARLK	415041
21527-2657	GARLK	416556!
21527-2657	GARLK	472157
21527-2663	GARLK	416891!
21527-2753	GARLK	416888!
21527-2756	GARLK	416153!
21527-3125	GARLK	455576!
21527-3128	GARLK	415938
21527-3275	GARLK	417362!
21527-3278	GARLK	417363
21527-3281	GARLK	416666
21527-3872	GARLK	471747!
21527-3880	GARLK	471344
21527-3883	GARLK	473442!
21527-4802	GARLK	450545
21527-4965	GARLK	451031=
21527-6658	GARLK	471276*
21527-7126	GARLK	470596*
21527-7164	GARLK	473455!
21527-7249	GARLK	416127
21527-7282	GARLK	470088
21527-7934	GARLK	55469*
21527-7941	GARLK	455509*
21527-8074	GARLK	471827!*
21527-8081	GARLK	450819*
215270352	GARLK	471652
215270394	GARLK	473205
215270424	GARLK	471750!
215270430	GARLK	471787!
215270436	GARLK	471795
215270439	GARLK	450165
215270439	GARLK	471801!
215271357	GARLK	416267!
215271357	GARLK	456267=
215278342	GARLK	450557
215278342	GARLK	471255!
21528-0109	GARLK	471529
21528-0111	GARLK	471538!
21528-0113	GARLK	471553!
21528-0115	GARLK	471579
21528-0143	GARLK	471567!
21528-0147	GARLK	471643!
21528-0151	GARLK	450033
21528-0153	GARLK	470390
21528-0159	GARLK	481443!
21528-0161	GARLK	481568!
21528-0213	GARLK	471267!
21528-0215	GARLK	471570!
21528-0217	GARLK	471633!
21528-0219	GARLK	471646!
21528-0225	GARLK	471730
21528-0269	GARLK	451583!
21528-0273	GARLK	471648
21528-0275	GARLK	471688
21528-0291	GARLK	471649!
21528-0293	GARLK	471689!
21528-0295	GARLK	450593!
21528-0297	GARLK	471733
21528-0301	GARLK	471760
21528-0303	GARLK	471619!
21528-0353	GARLK	471692!
21528-0355	GARLK	476838!
21528-0359	GARLK	471763
21528-0361	GARLK	471785!
21528-0535	GARLK	470774!
21528-0544	GARLK	473214!
21528-0547	GARLK	473215!
21528-0556	GARLK	471835!
21528-0643	GARLK	470625!
21528-0655	GARLK	473228
21528-0658	GARLK	451857
21528-0664	GARLK	473440!
21528-0700	GARLK	472213
21528-0898	GARLK	471504!
21528-0904	GARLK	472164!
21528-0913	GARLK	472179
21528-0922	GARLK	471141!
21528-0925	GARLK	473448
21528-0928	GARLK	471984
21528-1048	GARLK	472572!
21528-1051	GARLK	473179!
21528-1057	GARLK	473238
21528-1063	GARLK	473239!
21528-1186	GARLK	471870!
21528-1189	GARLK	472492!
21528-1198	GARLK	472924!
21528-1204	GARLK	472397!
21528-1321	GARLK	470898=
21528-1324	GARLK	473467
21528-1327	GARLK	472015!
21528-1471	GARLK	471341!
21528-1474	GARLK	471272!
21528-1492	GARLK	472636!
21528-1504	GARLK	411376!
21528-1639	GARLK	473474
21528-1654	GARLK	413246
21528-1666	GARLK	416271!
21528-1669	GARLK	412861
21528-1801	GARLK	472029
21528-1807	GARLK	471271!
21528-1822	GARLK	415001!
21528-1828	GARLK	455079!
21528-1834	GARLK	455655!
21528-2035	GARLK	416664!
21528-2038	GARLK	417484!
21528-2041	GARLK	415984!
21528-2050	GARLK	416706!
21528-2168	GARLK	417349
21528-2174	GARLK	415995!
21528-4584	GARLK	473197
21528-51	GARLK	471526!
21528-55	GARLK	471549!
21528-67	GARLK	471281!
21528-69	GARLK	471535!
21528-87	GARLK	471466!
21528-91	GARLK	471255!
21528-93	GARLK	471564
215280287	GARLK	471224!
215280351	GARLK	471652
215280541	GARLK	471192
215280646	GARLK	470059
215280646	GARLK	470380!
2152853	GARLK	471472!
2152871	GARLK	471551!
215348	CLARK	470605!
21537	C-R	450621*
21538	C-R	450621*
21539	C-R	450621*
215393	WILYS	471733
21540	C-R	473245!
215412	CLARK	415449=
2155638	GMC	5751
21560	C-R	412943
21561	C-R	412943
2156231	GMC	471466!
21566	GARLK	473230!
215745	OILGR	481443!
2157507	GE	411376!
21576	GARLK	473231!
2158	CARDX	473473
2158204	AMC	470590
215841	CLARK	473245!
2158432	GMC	416288
2158837	GMC	50883=
2159	CARDX	472636!
21590	GARLK	473010!
21598	GARLK	473232!
215A120X08	TROS	484058
216	C-R	5072
21603	C-R	225500
21603	C-R	55X68X8!
2160782	GMC	473232!
21610	C-R	225505*
21610	C-R	55X70X8!
21611	C-R	55X70X8V!
21611	C-R	710279
21611208	TROS	474255
21611508	TROS	8293S
21611604	TROS	471801!
21611605	TROS	7686S
21611608	TROS	450165
21611608	TROS	471801!
21611611	TROS	471801!
21612	C-R	710279
21612008	TROS	473212!
21612408	TROS	473214!
21612804	TROS	473224!
21612808	TROS	473016!
21613	C-R	710279
21613204	TROS	470625!
21613206	TROS	471689!
21613206C	TROS	470625!
21613208	TROS	470625!
21613212	TROS	470625!
21613604	TROS	472213
21614804	TROS	6703S
21614806	TROS	450400
21614808	TROS	450400
21619	C-R	225530
216193680	GARLK	7973S
216193709	GARLK	417608
21620	C-R	225530
21620	C-R	55X72X8!
21621	C-R	55X72X8V
21623	C-R	225530
21623	C-R	55X72X8!
21624	C-R	225535
21624	C-R	55X72X8!*
21625	C-R	55X75X10
21626	C-R	55X75X10V
21627	C-R	225545
21628	C-R	1207
21628	C-R	1207N
21629	C-R	225530*
21629	C-R	55X72X8!*
21630	C-R	55X78X10
21631	C-R	55X78X10
2163192	GMC	450593!
21632	C-R	55X78X10!*
21633	C-R	55X85X10!*
216335	UNIVE	410496!
216337	UNIVE	470605!
216350	MICH	415449!
216350	UNIVE	415449!
216354	MICH	415001!
216354	UNIVE	415001!
216354SL	MICH	415001!
216362	MICH	416273!
216362	UNIVE	416273!
21637	C-R	55X80X8!*
216375	UNIVE	455079!*
21638	C-R	55X80X8!
21639	IH	473474
21640	C-R	55X80X8
216400	UNIVE	455655!*
21641	C-R	55X80X8V
21642	C-R	55X80X8!*
21645	C-R	55X80X8!*
21648	C-R	225500
21648	C-R	55X68X8!
21649	C-R	55X82X12!
21650	C-R	9195S=
21651	C-R	55X82X12!
21652	C-R	710127
21660	C-R	55X85X10
21660	C-R	55X85X8!
216604	WILYS	471765!
2166091	GMC	416332!

! Industrial Size/Type * Minor Width Difference

= The U.S. customer service number is 877-4-TIMKEN. The Canadian customer service numbers are 800-565-4927 (English) and 800-565-0438 (French-Canadian).

Mfr. No.	Name	Zero Duplication or Recommended Industrial
21661	C-R	55X85X10!*
21665	C-R	55X88X8
2166675	AMC	**470530**!
21668	C-R	55X85X10!
21670	C-R	55X90X13*
21670	C-R	55X90X8!
21671	C-R	55X90X13!*
21673	C-R	55X90X13!
216811604	TROS	42081S!
21682	VICK	**474281**!
21685	C-R	55X100X7
21690	C-R	55X100X13*
21690	GARLK	**473237**!
216918	ALLCH	**471103**!
216928	ALLCH	**450400**
21692D	IH	**481864**
21693	C-R	55X100X13
216952	US-EL	**472258**!
216959R91	IH	40316S
216985	ALLCH	**471442**!
216990	ALLCH	**471276**
216A15006	TROS	321460
216A15006C	TROS	321460
216C13104	TROS	40468
216D13206	TROS	9363S
216V15BULK	NATL	216-V35BULK
2170013	GMC	**415458**!
21702-0111	GARLK	**471538**!
21702-0113	GARLK	**471553**!
21702-0144	GARLK	**471567**!
21702-0147	GARLK	**471643**!
21702-0148	GARLK	**471643**!
21702-0159	GARLK	**481443**!
21702-0175	GARLK	**471539**!
21702-0213	GARLK	**471267**!
21702-0215	GARLK	**471570**!
21702-0216	GARLK	**471570**!
21702-0219	GARLK	**471646**!
21702-0224	GARLK	**471137**
21702-0270	GARLK	**451583**!
21702-0288	GARLK	**471224**!
21702-0291	GARLK	**471649**!
21702-0293	GARLK	**471689**!
21702-0323	GARLK	**471651**
21702-0353	GARLK	**471692**!
21702-0383	GARLK	**472475**
21702-0385	GARLK	**473426**
21702-0390	GARLK	**471354**!
21702-0427	GARLK	**471766**!
21702-0430	GARLK	**471787**!
21702-0535	GARLK	**470774**!
21702-0544	GARLK	**473214**!
21702-0546	GARLK	**473214**
21702-0548	GARLK	**473215**!
21702-0550	GARLK	470950!
21702-0550	GARLK	6241S
21702-0551	GARLK	470950!
21702-0551	GARLK	6241S
21702-0552	GARLK	470950!
21702-0552	GARLK	6241S
21702-0592	GARLK	**473224**!
21702-0597	GARLK	**473016**!
21702-0624	GARLK	**473439**!
21702-0643	GARLK	**470625**!
21702-0644	GARLK	**470625**!
21702-0645	GARLK	**470625**!
21702-0655	GARLK	**473228**
21702-0657	GARLK	**473228**
21702-0664	GARLK	**473440**!
21702-0700	GARLK	**472213**
21702-0707	GARLK	**471821**!
21702-0717	GARLK	**470682**

Mfr. No.	Name	Zero Duplication or Recommended Industrial
21702-0760	GARLK	**473231**
21702-0762	GARLK	**473231**
21702-0769	GARLK	**473010**
21702-0772	GARLK	**473232**
21702-0774	GARLK	**473232**
21702-0829	GARLK	**473445**
21702-0835	GARLK	**473234**
21702-0837	GARLK	**473234**
21702-0843	GARLK	**474265**
21702-0859	GARLK	**471981**
21702-0898	GARLK	**471504**!
21702-0904	GARLK	**472164**!
21702-0906	GARLK	**472164**!
21702-0907	GARLK	**472185**!
21702-0909	GARLK	**472185**!
21702-0913	GARLK	**472179**
21702-0928	GARLK	**471984**
21702-1048	GARLK	**472572**!
21702-1050	GARLK	**472572**!
21702-1057	GARLK	**473238**
21702-1069	GARLK	**473240**!
21702-1075	GARLK	**473458**!
21702-1114	GARLK	**472319**
21702-1129	GARLK	**472144**!
21702-1135	GARLK	**472394**
21702-1150	GARLK	**450472**!
21702-1162	GARLK	**450474***!
21702-1186	GARLK	**471870**!
21702-1189	GARLK	**472492**!
21702-1191	GARLK	**472492**!
21702-1201	GARLK	**470530**!
21702-1204	GARLK	**472397**!
21702-1206	GARLK	**472397**!
21702-1323	GARLK	**470898**
21702-1329	GARLK	**472015**!
21702-1332	GARLK	**410308**!
21702-1340	GARLK	**472409**!
21702-1402	GARLK	**472018**
21702-1471	GARLK	**471341**!
21702-1473	GARLK	**471341**!
21702-1476	GARLK	**471272**!
21702-1494	GARLK	**472636**!
21702-1504	GARLK	**411376**!
21702-1505	GARLK	**411376**!
21702-1642	GARLK	**470565**!
21702-1644	GARLK	**470565**!
21702-1654	GARLK	**413246**
21702-1656	GARLK	**413246**
21702-1658	GARLK	**412119**!
21702-1668	GARLK	**416271**!
21702-1680	GARLK	**417480**!
21702-1750	GARLK	**417073**
21702-1752	GARLK	**417073**
21702-1807	GARLK	**471271**!
21702-1819	GARLK	**415449**!
21702-1821	GARLK	**415449**!
21702-1882	GARLK	413479
21702-1939	GARLK	**415483**!
21702-1948	GARLK	**417343**!
21702-1993	GARLK	**455434**
21702-2004	GARLK	**455151**
21702-2032	GARLK	480491
21702-2035	GARLK	**416664**!
21702-2038	GARLK	**417484**!
21702-2044	GARLK	**417316**!
21702-2045	GARLK	**417316**!
21702-2046	GARLK	**417316**!
21702-2047	GARLK	**415960**
21702-2048	GARLK	**415960**
21702-2049	GARLK	**415960**
21702-2086	GARLK	**455005**
21702-2088	GARLK	**455005**

Mfr. No.	Name	Zero Duplication or Recommended Industrial
21702-2115	GARLK	**415303**!
21702-2124	GARLK	**416921**!
21702-2168	GARLK	**417349**
21702-2170	GARLK	**417349**
21702-2172	GARLK	**417350**!
21702-2174	GARLK	**415995**!
21702-2177	GARLK	**417351**!
21702-2180	GARLK	**417487**!
21702-2180	GARLK	**417487**
21702-2183	GARLK	**417488**!
21702-2186	GARLK	**455019**!
21702-2198	GARLK	**455019**!
21702-2225	GARLK	**417621**!
21702-2237	GARLK	**416297**
21702-2270	GARLK	**476470**
21702-2273	GARLK	**417181**!
21702-2327	GARLK	**417354**!
21702-2348	GARLK	**417493**
21702-2366	GARLK	**415991**
21702-2366	GARLK	455146!
21702-2367	GARLK	**415991**
21702-2367	GARLK	455146!
21702-2369	GARLK	**417196**!
21702-2372	GARLK	**415437**
21702-2393	GARLK	**415711**
21702-2417	GARLK	**416332**!
21702-2421	GARLK	**415937**!
21702-2462	GARLK	**415379**
21702-2462	GARLK	**415379**!
21702-2501	GARLK	**417211**!
21702-2504	GARLK	**416345**!
21702-2519	GARLK	**476470**!
21702-2519	GARLK	**476470**
21702-2537	GARLK	**415035**
21702-2600	GARLK	**417511**
21702-2636	GARLK	417513
21702-2663	GARLK	**416891**!
21702-2711	GARLK	**416380**!
21702-2723	GARLK	**416149**
21702-2753	GARLK	**416888**!
21702-2759	GARLK	**416892**!
21702-2807	GARLK	**416158**
21702-2837	GARLK	**415138**!
21702-2915	GARLK	**415725**!
21702-2921	GARLK	**416865**!
21702-2922	GARLK	**416865**!
21702-2927	GARLK	**417541**
21702-3059	GARLK	**417262**!
21702-3067	GARLK	**415645**!
21702-3067	GARLK	455104
21702-3184	GARLK	**416107**!
21702-3184	GARLK	455073
21702-3277	GARLK	**417362**!
21702-3278	GARLK	417363
21702-3279	GARLK	417363
21702-3280	GARLK	417363
21702-3281	GARLK	**416666**
21702-3282	GARLK	**416666**
21702-3283	GARLK	**416666**
21702-3355	GARLK	**415683**
21702-3367	GARLK	**415072**
21702-3384	GARLK	**415074**
21702-3426	GARLK	**415294**!
21702-3518	GARLK	**416044**
21702-3544	GARLK	**415867**
21702-3601	GARLK	**417601**
21702-3610	GARLK	**417604**
21702-3624	GARLK	**415090**
21702-3660	GARLK	**417605**
21702-3673	GARLK	**417198**
21702-3869	GARLK	**472705**!
21702-3921	GARLK	**417601**

Mfr. No.	Name	Zero Duplication or Recommended Industrial
21702-3938	GARLK	**417604**
21702-3949	GARLK	455966
21702-3954	GARLK	**455462**
21702-4031	GARLK	55228=
21702-4062	GARLK	**415076**
21702-4503	GARLK	**55301S**
21702-4507	GARLK	**455462**
21702-4560	GARLK	**415294**!
21702-5246	GARLK	**470625**!
21702-55	GARLK	**471549**!
21702-77	GARLK	**471532**
21702-80	GARLK	**473405**
21702-87	GARLK	**471466**!
21702-91	GARLK	**471255**!
21702-9808	GARLK	**471689**!
217020287	GARLK	**471224**!
217020351	GARLK	**471652**
217020362	GARLK	**471785**!
217020387	GARLK	**471765**!
217020388	GARLK	**471765**!
217020424	GARLK	**471750**!
217020425	GARLK	**471750**!
217020439	GARLK	450165
217020439	GARLK	**471801**!
217020441	GARLK	450165
217020441	GARLK	**471801**!
217020484	GARLK	450129
217020484	GARLK	**472826**!
217020543	GARLK	**471192**
217020646	GARLK	470059
217020646	GARLK	**470380**!
217020648	GARLK	470059
217020648	GARLK	**470380**!
2170237	GARLK	50199S!
2170237	GARLK	6863S!
2170238	GARLK	50199S!
2170238	GARLK	6863S!
2170250	GARLK	**471442**!
217032	ALLCH	**471192**
217036B	OLIVE	40061S=
217039	ALLCH	**450400**
21704	GARLK	**472164**!
21709D	IH	**455019**!
217103	ALLCH	**472258**!
217106	ALLCH	**471267**!
217130	CINMI	**416891**!
21714	GARLK	**472185**!
217164	ALLCH	**473238**
21726	GARLK	**472179**
21726F	OSHKO	**476470**!
21726F	OSHKO	**476470**
21732	RELEE	**473010**!
21733	RELEE	**415294**!
21736	C-R	**473244**!
21736	C-R	**473244***!
21742	C-R	**473244**
217431	ALLCH	**473214**!
21744D	IH	**410102**
217484	ALLCH	470059
217484	ALLCH	**470380**!
21749	C-R	**472234**
2174901	GMC	**472015**!
21752	C-R	**472234**
21753	C-R	**472234**
217534	ALLCH	**471750**!
217535	ALLCH	**471276**
217535	SPERY	**471831**=
217536	ALLCH	**471141**!
21755	C-R	**472234**
21756	C-R	4740
21756	MA-PR	343185
217570	ALLCH	**415007**

! Industrial Size/Type * Minor Width Difference

= The U.S. customer service number is 877-4-TIMKEN. The Canadian customer service numbers are 800-565-4927 (English) and 800-565-0438 (French-Canadian).

Mfr. No.	Name	Zero Duplication or Recommended Industrial
21758	C-R	472018
21759	C-R	472018
21761	C-R	472018
2176189	GMC	471103!
21762	C-R	472018*
21763	C-R	472018=
217639H1	IH	415551
21764	C-R	472018*
217640H1	IH	415066
21766	C-R	472018
21767	C-R	472018
21769	C-R	4740
21769	C-R	8974S*
21770	C-R	8974S
21771	C-R	8974S
21771	RELEE	473228!
21775	C-R	473471
2177BG	SPG	712598
2177BX	SPG	2177
2178091	GMC	471649!
217813H1	IH	471195!
21787	C-R	472020
217873	ALLCH	472144!
217873	MASSE	472144!
21788	C-R	472020
2179	UNIVE	418028
2179	UNIVE	455137!
21795D	IH	470530!
21798	C-R	470354*
217985	HYST	J1121
2179886	GMC	6090S
21799	C-R	470354*
2179922	GMC	470954
2179931	GMC	471192
217A124X06.5	TROS	9569S
218	C-R	417584+99499
218	C-R	5624
2180	UNIVE	415991
2180	UNIVE	455146!
21802	GARLK	472439
21808	C-R	3095
21809	C-R	470354
21810	C-R	470354
21811	C-R	470354*
21812	C-R	470354*
21812004	TROS	40769S
21812005	TROS	40769S
21812404	TROS	42763
21812405	TROS	42763
21812408	TROS	50402
2181265	GMC	472397!
21814	C-R	6636S
21814	GARLK	472572!
21820	C-R	470354
218205R91	IH	6270
218206R91	IH	5401
21820D	IH	415371
21823-0109	GARLK	471529
21823-0111	GARLK	471538!
21823-0113	GARLK	471553!
21823-0115	GARLK	471579
21823-0143	GARLK	471567!
21823-0147	GARLK	471643!
21823-0151	GARLK	450033
21823-0153	GARLK	470390
21823-0159	GARLK	481443!
21823-0161	GARLK	481568!
21823-0215	GARLK	471570!
21823-0217	GARLK	471633!
21823-0219	GARLK	471646!
21823-0225	GARLK	471730
21823-0269	GARLK	451583!
21823-0273	GARLK	471648
21823-0275	GARLK	471688
21823-0291	GARLK	471649!
21823-0297	GARLK	471733
21823-0301	GARLK	471760
21823-1324	GARLK	473467
21823-51	GARLK	471526!
21823-55	GARLK	471549!
21823-69	GARLK	471535!
21823-87	GARLK	471466!
21823-91	GARLK	471255!
21823-93	GARLK	471564
2182353	GARLK	471472!
2182371	GARLK	471551!
21826	GARLK	473238!
21828	HYST	470088
218283TB	TRSCM	473244!
218284	ALLCH	415960!
218294TL	TRSCM	472234
218304TB	TRSCM	8974S
218313	ALLCH	471224
218327	ALLCH	473367!
218327	ALLCH	473367
21835	GARLK	473239!
218350	MICH	415302
218350	UNIVE	415302
218354	UNIVE	455311
21836	C-R	473245!
218362	MICH	415988
218362	UNIVE	415988*
218375	UNIVE	417481
21838	GARLK	473239!
218387	UNIVE	455280*
218388	MICH	455280
2183992	GMC	470898
21840	C-R	473245!
218450	ALLCH	470059N
21848	GARLK	473240!
218538	CUMMI	39723
218539	CUMMI	39732
218539	CUMMI	57248
218539-04	CUMMI	39732
2185521	GMC	474276!
21855D	IH	415458!
21856	VICK	415196!
21860	VICK	417205!
2186197	GMC	471466!
2186314	GMC	470898
21865	VICK	416888!
218655	ALLCH	471554!
218682	ALLCH	474255
21870	HYST	450147
218703	ALLCH	473231!
2187813	GMC	6245S=
2188404	GMC	471141!
21886	VICK	474255
21890	C-R	412943
2189804	GMC	471192
219	C-R	45X70X10+99177
219-6404	GO-TI	8139
219-6405	GO-TI	7607
219-6406	GO-TI	7934S
21900	C-R	412943*
219023	OILGR	471647
21910	C-R	413472
219155	ALLCH	470334!
21918	C-R	710413
2191897	GMC	473010
21918D	IH	415995!
2192652	GMC	416865!
21934	C-R	416268
219355TBJ	TRSCM	2286
21938	C-R	3103!
219396	ALLCH	472560N!
21940	C-R	415350*
21944K	IH	473438
219475	ALLCH	415138!
2194OS	JN-MN	417606*
21950	C-R	415350
21952	C-R	5604
21953	C-R	710171
21955	C-R	2286
21955D	IH	473460
219594	FRUEH	480630
2196057	GMC	472397!
21961	C-R	3553
21961	RELEE	416156
21962	C-R	5604
219621	ALLCH	471868
2196401	GO-TI	473317
2196403	GO-TI	41257!
2196407	GO-TI	8705S
2196408	GO-TI	9406S
2196409	GO-TI	9015S
2196410	GO-TI	8121S
2196411	GO-TI	6815
2196414	GO-TI	8871
2196415	GO-TI	5121
2196416	GO-TI	3087
2196417	GO-TI	3357
2196418	GO-TI	1196
2196419	GO-TI	6840S
2196420	GO-TI	9406S
2196421	GO-TI	1217
2196422	GO-TI	1195
2196423	GO-TI	224820
2196423	GO-TI	48X62X8!
2196424	GO-TI	1188
2196425	GO-TI	4148
2196501	GO-TI	9568
2196502	GO-TI	9363S
2196503	GO-TI	5124
2196504	GO-TI	8660S
2196505	GO-TI	8704S
2196506	GO-TI	8695S
2196508	GO-TI	5124
2196509	GO-TI	8835S
2196511	GO-TI	9569S
2196512	GO-TI	2689S
2196513	GO-TI	473228
2196514	GO-TI	1012
2196514	GO-TI	1012N
2196516	GO-TI	3214
2196517	GO-TI	3348
2196518	GO-TI	1955
2196518	GO-TI	52X65X9!
2196519	GO-TI	3199
2196520	GO-TI	1955
2196520	GO-TI	52X65X9!
21969D	IH	473367!
21969D	IH	473367
219774	JEFF	473016!
2198804	GMC	471192
219899	JEFF	415001!
219899	SUL	415001!
219929	ALLCH	415254
2199335	GMC	471267!
219A125X08.25	TROS	8660S
219D4	WHITE	472636!
21C7052	FORD	410059
21C7052	FORD	470380!
21C7052A	FORD	410059
21C7052A	FORD	470380!
21C7052A1	FORD	410059
21C7052A1	FORD	470380!
21C7052A2	FORD	410059
21C7052A2	FORD	470380!
21D2531	FWD	471750!
21D6131	FWD	471554!
21FZ-1177AB	FORD	3622
21FZ-7F401AA	FORD	4189H
21RM201	CONTI	470334!
21X10043B	JOHND	416888!
21X10052B	JOHND	343185
21X12461A	JOHND	417344!
21X12544A	JOHND	473214!
21X12544B	JOHND	473214!
21X14213B	JOHND	415458!
21X14214A	JOHND	471138!
21X14479A	JOHND	473203
21X15184A	JOHND	471224!
21X15517A	JOHND	415138!
21X18141A	JOHND	415327
21X2813	GARLK	415064
21X35X7ASN(35)	ISP	21X35X7
21X35X8SC	TRSCM	21X35X8
21X35X8TC	TRSCM	21X35X8
21X51544A	JOHND	455056
21X52416A	JOHND	471984
21Y2997	GWI	472636!
22-CT115	OSHKO	417254
22001	DANMA	470625!
220010	DANMA	473236!
220011	MINNM	471787!
220013	DANMA	204002
220015	DANMA	473227
220017	DANMA	472015!
220018	DANMA	470625!
220019	DANMA	204017
22002	DANMA	472164!
220020	DANMA	471750
220021	DANMA	40370S
220022	DANMA	204017
220027	SPG	471554!
22003	DANMA	471192
22005	C-R	710169
22005	DANMA	450165
22005	DANMA	471801!
22006	DANMA	471766!
22006	GARLK	471424!
22006X	MASSE	471821!
22007	DANMA	450492
2200730	CHRYS	471267!
22008	DANMA	473214!
220083	SPG	472924!
22009	DANMA	50468
220096	CLARK	472439=
2201050	GRAM	450457
2201055	GRAM	471766!
2201079X	GRAM	471554!
220120	SPG	471224!
220126	CLARK	417344!
22013	C-R	710108
22014	C-R	56X70X8V
22015	C-R	56X70X8
22018	C-R	225650
22018	C-R	56X72X7*
220184	ALLCH	471766!
2201889	CHRYS	6241S
220194	ALLCH	471649!
22020	C-R	225650
22020	C-R	56X72X11.5!
220207	CLARK	472213
220214	CLARK	474255
22022	C-R	710069
22023	GARLK	472492!

! Industrial Size/Type * Minor Width Difference

= The U.S. customer service number is 877-4-TIMKEN. The Canadian customer service numbers are 800-565-4927 (English) and 800-565-0438 (French-Canadian).

Mfr. No.	Name	Zero Duplication or Recommended Industrial
220230	SPG	**471689**!
22024	C-R	710393
22025	C-R	225650
22025	C-R	56X72X11.5!
22026	C-R	225673
22028	C-R	225673
22029	C-R	4741
220294	CLARK	**417621**!
220295R91	IH	**450143**
2202993SA	TRSCM	**470530**
22030	C-R	4899
22030	C-R	56X75X7*
22030	C-R	5700
22031	C-R	225545
220316	ALLCH	**470334**!
22033	C-R	4899
220337DSL	MICH	**410708**
22034	JOY	**471570**!
22035	C-R	710146
22035	GARLK	**472924**!
220350	UNIVE	**415483**!
220352	SPG	**472164**!
220362	MICH	**415458**!
220362	UNIVE	**415458**!
22037	C-R	1993
220375	MICH	**417343**!
220375	UNIVE	**417343**!
22038	C-R	225650
220387	UNIVE	**415007***
220388	MICH	**415007**
220389R91	IH	**471272**!
220395	FORD	**473215**!
2203RC	SUL	**417316**!
22040	C-R	56X78X8*
220400	UNIVE	**417082***
22042	C-R	225678
220439	CLARK	**417487**
2204OS	JN-MN	**415001**!
22050	C-R	56X80X8
2205080	CHRYS	**471827**
22053	C-R	56X80X8!
22056	GARLK	**472397**!
220570	CINMI	**415458**!
220570	CLARK	**471141**!
220571	CINMI	**417355**!
2205BGR	SPG	5115
22060	C-R	56X82X8
220631	US-EL	**415034**!
220705	FORD	450430
220705	WOODB	450430
22071	C-R	56X85X8
22071	GARLK	**473242**
22074	US-EL	**416380**!
2207484	CHRYS	7886S
22075	C-R	5686
22075	C-R	5700
220752	SPG	**410752**
220753H4	IH	**417602***=
220762	FORD	**471192**
220762	WOODB	**471192**
22076X	MASSE	**471652**
220785	ALLCH	**474264**
22080	C-R	56X88X8
220800	CLARK	476098N=
220816	CLARK	**470530**!
220845	CLARK	**472258**!
220866	CINMI	**472636**!
2208947	GMC	**416282**
2208B-652	ROCKW	733067
2208C-575	ROCKW	733067
2208C-835	ROCKW	730008
2208E-889	ROCKW	730004
2208N-820	ROCKW	730149
2208R-928	ROCKW	733067
2208W-412	ROCKW	733106
2208W-413	ROCKW	733111
2208X-440	ROCKW	733107
2208Z-416	ROCKW	733105
2208Z-422	ROCKW	733114
220915	JEFF	**473234**
2209334	GMC	55646=
22099H	IH	**472924**!
2209K-791	ROCKW	730009
220X250X15SC	TRSCM	220X250X15
220X250X15TC	TRSCM	220X250X15
221000	NEHO	**471870**!
2210228	GMC	**330385**
221042	CLARK	**474256**
221047	CLARK	**472299**
2210611	GMC	**415991**
2210851	GMC	**472397**=
2211035	WOOL	**455121**
22113206.5	TROS	204013
22114405	TROS	**473317**
22114407	TROS	203008
221167	KEN	415656
221192	CLARK	**472636**!
221193	CLARK	480950N=
221194	CLARK	**471141**
22120	C-R	710176
221207	SPG	12X22X7
221209	KEN	**415001**!
221212	OILGR	**473228**
221233	KEN	**415437**=
221233	PACIF	**415437**=
22125	C-R	710108
22125	UNIVE	**471538**!
221270	NATL	12X30X7
2212953	GMC	**474278**!
22130	C-R	**472234**
221344	CLARK	**411376**!
22137	MICH	**471553**!
22137	UNIVE	**471553**!
22138W	DIA	**410308**!
221410	NATL	14X24X7!
22143	C-R	**473467**
221430	NATL	14X28X6
22144	FMC	**471820**
2214569	GMC	**416654**
221490	NATL	14X35X7
2215	MID-R	**471466**!
22150	MICH	**471579**
22150	UNIVE	**471579***
221503	CLARK	**471868**
221510	NATL	15X25X6
221518R91	IH	**472560N**!
221520	NATL	15X26X7
221540	NATL	15X30X7
221550	NATL	15X32X8
221551	JEFF	**471765**!
221560	NATL	15X35X7
22159	GARLK	**473204**
221592R91	IH	40316S
2216	MID	**471267**!
2216	MID-R	**471267**!
2216104	GMC	**481568**!
221620	NATL	16X30X7
221640	NATL	16X35X7
22168D	IH	**415072**
22170	C-R	50631
22171	GARLK	**470898**
22171HA	IH	**417181**!
22171X	MASSE	**415960**
221720	NATL	17X30X7
221730	NATL	17X32X7
22175	C-R	7568
221760	NATL	17X40X7
2218	NATL	**415379**!
221810	SPERY	**471413**
221830	NATL	18X32X8
22186	GARLK	**472015**!
221870	NATL	18X40X7
2218RC	SUL	**415458**!
22196X	IH	**473231**
22196X	MASSE	**473231**
22198	GARLK	**472016**!
2219RC	SUL	**411394**!
222020	NATL	20X32X7
222020	SPG	20X32X7
222025	SPG	20X30X7
222075	NATL	20X47X7
222079	KEN	7131
222079	PACIF	8724S
2220881	GMC	6612S
2220883	GMC	**471413**
222092	NATL	20X52X7
2220RC	SUL	**471271**!
22210	GARLK	**473243**
222101	HOUGH	**416107**!
222101H1	IH	**416107**!
222110	HOUGH	**412119**!
222117	HOUGH	**410308**!
222120	HOUGH	**472397**!
222124	C-R	**450400***
2221481	GMC	**471689**!
222182	CLARK	**412473**!
222183	CLARK	**417316**!
2221RC	SUL	**415302**
2222	SHOV	**415036**
2222	UNIVE	6922=
222208	ALLCH	**416125**!
222210	NATL	22X32X7
222220	NATL	22X35X7
222230	ALLCH	**471765**!
2222374	GMC	**417191**
22224	C-R	1964
2222423	GMC	**471267**!
22225	C-R	1984
2222591	GMC	**415991**
2222591	GMC	455146!
222260	PACIF	415073N=
222270	NATL	22X47X7
222272	FORD	**481792**
222273	FORD	**471192**
22230	C-R	710072
222309	WOOL	**415991**
2223597	GMC	**417506**
222375	MICH	**455151**
222375	UNIVE	**455151**
222387	UNIVE	**455008***
222388	MICH	**455008**
22240	C-R	57X81X8*
222407	KEN	456483=
222408	KEN	**456305**
222408	PACIF	**456305**
222409	PACIF	**254287**
222410	NATL	24X35X7
22245	C-R	1928*
222455	NATL	24X47X7
22250	C-R	1928
222510	WMG	1998
2225342	GMC	**471442**!
222539	ALLCH	**473424**!
222540	ALLCH	**473444**
222540	SPG	25X40X7
22254007	ALLCH	**473444**
222541	NATL	222540
222560	NATL	25X47X7
222570	NATL	25X52X7!
222571	CLARK	**471413**!
22260	C-R	57X92X8!
2226149	CHRYS	**323138**!
22261VB	TRSCM	341022
22262	C-R	57X92X8*
222650	NATL	26X47X7
2226530	GMC	**415351**!
2226549	GMC	**415995**!
222660	KEN	415073N=
2226696	GMC	**415458**!
222714	ALLCH	470950!
222714	ALLCH	6241S
2227339	GMC	**411376**!
222768	CLARK	**415991**
222768	CLARK	**415991**!
2227716	CHRYS	**474276**!
222828	CLARK	**476470**
22282VH	TRSCM	43034S
22284	C-R	710086
222867	KEN	9555S
222867	PACIF	9555S
2228694	GMC	370023A
222878	OILGR	**473313**
222880	NATL	28X52X7
2229	NATEN	**416137**
22293	LAVIN	**474276**!
2229540	GMC	455037
222A14704	TROS	6840S
222A147X07.5	TROS	**481537**
223	CHEL	**471760**
2230	NATEN	**416339**
2230	NATEN	455031!
223005	SPG	30X40X7
223015	NATL	223014
223020	NATL	30X47X7
223020	SPG	30X47X7
22302TA	TRSCM	**471272**!
22302VHY	TRSCM	40520S
22303	GARLK	**471272**!
2230357	SPG	30X52X7
22303VTB	TRSCM	**471272**
223042H1	IH	**470530**
223042R95	IH	**470530**=
22304TA	TRSCM	**471272**
22306	C-R	341022
22306	FMC	**472150**
223065	NATL	30X62X7
223086	CLARK	**416380**!
2230B	GOODM	**417316**!
2230C	GOODM	**417316**!
2230D	GOODM	**417316**!
2231	CARDX	**473463**
2231056	GMC	**471689**!
2231071	GMC	**472636**!
22311	C-R	722109
223112	C-R	**473214**
223112M1	C-R	**473214**
223114	C-R	**473016**!*
223116	C-R	**470625**!
223116M1	C-R	**470625**!
223124	C-R	**450400***
22313TB	TRSCM	**471138**!
2231431	GMC	**472258**
22317	GARLK	**471138**!
223184PTB	TRSCM	**410737**!
2231D	GOODM	**415960**!
2232	CARDX	**450456**!
2232123	CHRYS	5M867
22322VAY	TRSCM	40316S

! Industrial Size/Type * Minor Width Difference

= The U.S. customer service number is 877-4-TIMKEN. The Canadian customer service numbers are 800-565-4927 (English) and 800-565-0438 (French-Canadian).

Mfr. No.	Name	Zero Duplication or Recommended Industrial
22323	C-R	**471341**!
223230	SPG	32X45X7
22324	C-R	411452=
2232415	GMC	5452$
22324TA	TRSCM	**472636**
22325	C-R	43034S
223255	SPG	32X52X7
22325SA	TRSCM	**472636**
22327	C-R	**471341**!
22328	C-R	453613*
223297	NEHO	**471271**!
2232D	GOODM	**416706**!
22330	C-R	**471341**!
22331	C-R	**471341**!
22332	C-R	**471341**!
22332R	DIA	**470898**!
22333	C-R	**471341**!
22333	GMC	417536
22333TB	TRSCM	**412920**!
22333TBN	TRSCM	**412920**!
22333VB	TRSCM	**412920**
22334	C-R	**471341**!
22334SA	TRSCM	**412920**
22334TA	TRSCM	**412920**!
223354TA	TRSCM	**411253**
22338	C-R	**471341***
22338	C-R	**471341**!
22339	C-R	**471341**!
2234	ALLCH	**471570**!
22340	C-R	**471341**!
22341	GARLK	**412920**!
2234133	IVECO	713132
2234377	GMC	370012A
2234378	GMC	370012A
22345	C-R	**471341**!
22346	C-R	**471341**!
2234866	CHRYS	**417316**!
22349	C-R	**471272***
22349	C-R	**471272**!
2234D	GOODM	**416282**
22350	C-R	**471272**!
2235018	GMC	5778
2235082	GMC	**416888**!
22351	C-R	40520S
223510	SPG	35X47X7
2235140	CHRYS	**450400**
223520	NATL	35X50X8!
22353	C-R	**471272**!
223538	CLARK	**415483**
22354	C-R	**471272**!
2235490	CHRYS	**415995**!
22354TA	TRSCM	**411376**!
22355	C-R	**471272**!
223552	NATL	35X62X7!
223552	SPG	35X62X7*
22356	C-R	**471272**!
22358	C-R	**471272***
22358	C-R	**471272**!
22359	C-R	**471272***
22359	C-R	**471272**!
22359	HI-EQ	**471570**!
22361	C-R	**471272**
223613	CLARK	**471267**!
22362	C-R	**471272**!
2236217	GMC	7840S
2236257	GMC	**415458**
22363	C-R	**471272**
22364	C-R	40520S
22368	C-R	40520S
2236978	GMC	7412S
223707A	HARWA	22X37X8
223708A	HARWA	22X37X7!
223708A	HARWA	22X37X8!
22371	C-R	352637
22372	C-R	352637
223725	KEN	**415371**
22375	C-R	**473473**
22379	C-R	**473473**
22380	C-R	**473473**
22382	C-R	**473473**
223820	NATL	1174
223820	NATL	38X52X8.5!
223830	WMG	223832
223832	NATL	223830
223832	NATL	38X55X7!
22384	C-R	**473473***
22384	HI-EQ	**471413**!
22385	C-R	**473473**
2238502	GMC	5410$
2238542	GMC	5473$
2238543	GMC	5408
22388	LAVIN	**473426**
223880C1	CASE	**472843**
2238860	CHRYS	**417487**!
2238860	CHRYS	**417487**
2238860	GMC	**417487**!
2238860	GMC	**417487**
22389	LAVIN	**471504**!
2238916	GMC	**470530**!
2238917	GMC	**472179**
22390	C-R	**473473**
22391	C-R	**473473**
2239124	CHRYS	**416654**
22392	C-R	**473473***
22393	WOOL	**417159**
22394	C-R	**473473**
22396	C-R	**473473**
22397	C-R	**473473**
22399	C-R	**471138**!
22400	C-R	**471138**!
22400PTB	TRSCM	722250
22401	C-R	**471138**!
22402	C-R	**471138**!
22403	C-R	**471138**!
2240314	GMC	**410825**
22404	C-R	**471138**!
22404	LAVIN	**471733**
224040	SPG	224040
224040	SPG	40X60X10!
224045	SPG	40X62X12
22406	C-R	**471138**!
22407	C-R	**471138**
22408	C-R	**471138**!
22409	C-R	**471138**!
22409	LAVIN	**474278**!
2240929	GMC	**471765**!
2241	FED	**450332**
22410	C-R	**471138**!
2241142	GMC	240731
2241143	GMC	240736
22412404	TROS	**473215**!
22412408	TROS	**473215**!
22412411.25	TROS	**473215**!
22412808	TROS	**473225**!
22413	C-R	**410737**!
22413204	TROS	**470380**!
22413206.25	TROS	**470380**!
22413208	TROS	**470380**!
22413209	TROS	**470380**!
22413212	TROS	410059
22413212	TROS	**470380**!
22413604	TROS	40438S
22413606.5	TROS	**472299**
22413608	TROS	**472299**
224139X04	TROS	1192
22414	C-R	**410737**!
22414004	TROS	**473231**!
22414008	TROS	**473231**
22414404	TROS	**473233**!
22414408	TROS	**473233**!
22414807	TROS	**473237**
224156	CINMI	**415076**
22415HA	IH	**411253**!
22417	C-R	**410737**!*
22418	C-R	**410737**!*
2241RC	SUL	**470682**
224210	SPG	42X55X8
22422	C-R	**410737**!*
22422	GARLK	**470565**!
22424	C-R	**410737**!
22425	C-R	3095
22425	C-R	**410737**!
22426	C-R	**410737**!
22427	C-R	**410737**!
224285	CLARK	3439N=
224286	CLARK	**470334**=
224287	CLARK	**470898**=
22430	C-R	200763*
2243081	GMC	**416130**!
22431	CLARK	**330385**!
22433	C-R	**472636**!
22434	C-R	**472636**!
22434	GARLK	**413246**
224348	US-EL	**472185**!
22436	C-R	**473245**!
224362	MICH	**415984**!
224362	UNIVE	**415984**!*
2243649	GMC	5410
2243649	MOHWK	5410
22437	C-R	**472636**!
224375	MICH	**417316**!
224375	UNIVE	**417316**!
22438	C-R	**472636**!
224387	UNIVE	**415960**!
224388	MICH	**415960**!
22440	C-R	**472636**!
224400	UNIVE	**416706**!
22440MA	IH	**476838**!
22441	C-R	**472636**!
22442	C-R	**472636**!
224425	UNIVE	**416282**
22443	C-R	**472636**!*
22443	TMTR	**473232**!
22444	C-R	**472636**!
22445	C-R	**472636**!*
22446	C-R	**472636***
22446	C-R	**472636**!
22446	GARLK	**413247**!
224462	SPG	44X62X8
2244627	GMC	5452
22447	C-R	**472636**!
22448	C-R	**472636**!
22448	C-R	**472636***
22449	C-R	712512
224526X	GAL	JV1999=
224530	NATL	1012
224530	NATL	1012N
22454	C-R	1932
224558	ALLCH	**471442**!
22455806	ALLCH	**471442**!
224577	CLARK	**417316**=
224583	JEFF	**415034**!
22459	US-EL	**471504**!
2245J-36	ROCKW	JV1869=
2245J10X	GAL	JV1978=
2245Y-51	ROCKW	JV2038=
2245Z26	GAL	JV1999=
22460	C-R	**472636**!*
22461	C-R	**472636**!*
22461	GARLK	**416271**!
22462	C-R	**472636**!
2246311	SPICE	**472924**!
2246312	SPICE	**473473**
2246313	SPICE	**472015**!
2246314	SPICE	**472012**
224637	SPICE	**411253**!
224638	CLARK	**410308**!
224642	ALLCH	**471554**!
224644	ALLCH	**471224**!
22465	C-R	40316S
2246580	GMC	5408
22468	C-R	40316S
224687	ALLCH	**473424**!
22472	C-R	**472636**!
22474	C-R	456837V
22476	C-R	**472636**!
22477	C-R	**472636**!
224772	CINMI	**417604**
224777	ALLCH	240151
224779	ALLCH	470950!
224779	ALLCH	6241S
22477908	ALLCH	470950!
22477908	ALLCH	6241S
22480	C-R	**472636**!
224810	ALLCH	**471192**
2248112	GMC	50199S!
2248112	GMC	6863S!
22482	C-R	**472636**!
224820	NATL	1188
224820	WMG	1954
22483	C-R	44052
224830	NATL	224820
224831	NATL	1969
22484	C-R	454136N
22485	C-R	**411253**!
224850	NATL	48X72X7!
22486	C-R	**411253**!
22490	C-R	**411253**!
224914	ALLCH	240356
22492	C-R	**411253**!
22493	C-R	**411253**!
22494	ALLCH	240356
22494	C-R	**411253**!*
224955	ALLCH	240414
22498	C-R	**411253**!
224A13208	TROS	**470380**!
224A13208	TROS	472189A!
224A132X12	TROS	9613S
224B12406	TROS	9568
224B13606.5	TROS	**472299**
224FF116	C-R	**470625**!
225003	SPG	**415458**!
225010	NATL	1209
225010	WMG	5770
225019	MIHLE	**416476**!
225019R	ROCKW	**416476**!
225020	MIHLE	**455576**!
225020R	ROCKW	**455576**!
22504915	GM	421
225050	NATL	50X80X8
225051	AUTOZ	TCS45968
22505150	GMC	8660S
2250534	GMC	**471103**!
2250582	GMC	**412119**
22506	C-R	**411253**!
225068	AUTOZ	35011
225074	AUTOZ	35127
225075	CLARK	**470954***=

! Industrial Size/Type * Minor Width Difference $ F-M Number Is Part Of A Kit
= The U.S. customer service number is 877-4-TIMKEN. The Canadian customer service numbers are 800-565-4927 (English) and 800-565-0438 (French-Canadian).

Mfr. No.	Name	Zero Duplication or Recommended Industrial
225084	AUTOZ	35300
225085	AUTOZ	35301
225086	SPG	417487!
225086	SPG	417487
225091	AUTOZ	35327
22510	C-R	411253!
22511	C-R	411253!
225110	C-R	473212!
225111	C-R	50168
225111	CLARK	415458!
225112	C-R	473214
225112	CLARK	473214!
225112	GOODM	473214
225112M1	C-R	473214
225114	C-R	473016!
225114	GWI	473016!
22511514	GMC	8660S
225116	C-R	470625!
225116M1	C-R	470625!
225117	CINMI	417344!
225118	C-R	471571
225119	ALLCH	472354!
22512	C-R	411253
22512	C-R	411253=
225124	C-R	450400
225124	CLARK	450400
22512853	GM	411
225132	AUTOZ	35507
225133	AUTOZ	35508
22514	C-R	450604
225141	AUTOZ	35524
225142	AUTOZ	35526
225146	SPG	415146!
225146	SPG	415991
225147N	SPG	415449!
225149	AUTOZ	35547
22515	C-R	411253!
225150	AUTOZ	35548
225154	AUTOZ	35555
225159	AUTOZ	35608
22516	C-R	474255
225161	CLARK	415991
225161	CLARK	415991!
22516M1	C-R	474255
22517	C-R	411253!
225177	CLARK	415458
22518	C-R	450165
22518	C-R	471801
22518	CABOT	450165
22518	CABOT	471801!
22518	GOODM	450165
22518	GOODM	471801!
22518	GR-DV	450165
22518	GR-DV	471801!
22518M1	C-R	450165
22518M1	C-R	471801
22519	C-R	473212!
225193	PACIF	416892!
2251OS	JN-MN	417247!*
225208	SPG	52X65X9
225220	NATL	1884
225220	SPG	52X68X8
225227	NATL	225650
225281C91	IH	417349!
22529188	GMC	40375
2253	UNIVE	472397!
22531277	GMC	320259
225316	CLARK	472164!
22531F	DIA	417484!
22532	C-R	412920!
22533550	GMC	710329
225349	CLARK	471341!
225351	CLARK	416271=
22536	GARLK	471271!
2253622	GMC	472015!
22540	C-R	412920!
225409	CINMI	471554!
22541	C-R	412920!
225419	CINMI	473238
225450	ALLCH	471835!
225450	CLARK	471835!
22545259	GMC	40375
22545260	GMC	320259
225460	SPG	54X82X10
225461	CLARK	473224=
225477	CLARK	471267!
22548	GARLK	470605!
22550	C-R	412920
225502	HYST	473228!
22551	GARLK	415449!
225510	AUTOZ	35418
225530	NATL	55X72X8!
22554	C-R	412920!
22555	C-R	412920!
225550	NATL	55X80X8
225560	NATL	55X85X10
22557	C-R	412920!
22557	GARLK	415449!
22558	C-R	412920!
22559	C-R	412920!
22560	C-R	412920!
22561	C-R	412920
225615	SPERY	473237!
22562	C-R	712512+99229
22563	C-R	200929
225643	AUTOZ	72665
2256492	GMC	370002A
2256494	GMC	6754S=
2256495	GMC	370002A
22565	C-R	41075S
225650	NATL	56X72X11.5
22567	C-R	41075S
225685	CLARK	450400
22569	GARLK	416273
22569X	SPICE	472560N
22570	C-R	455136
22571	C-R	455136
2257151	GMC	417353!
225727	CLARK	471766!
225731	CINMI	417621!
225732	CINMI	415187
225733	CINMI	470059
225733	CINMI	470380!
225736	CASE	471554!
225737	CINMI	471649!
22574	C-R	455136*
22575	C-R	411376!
2257527	GMC	5951
22576	C-R	455136
225763	CLARK	416404=
225764	CLARK	415025=
225767	ALLCH	473444
22577	C-R	455136
225782	CLARK	416289N=
2258	MID	473227
2258	MID-R	473227
22580	C-R	411376!
225805	ALLCH	5MR1301
225806	ALLCH	42260S
22581	C-R	411376!
22582	C-R	411376!
225823	CLARK	470565=
225826	CLARK	410825
2258269	GMC	417541
22583	C-R	411376!
225834R91	IH	474278!
225835R91	IH	474278!
22584	C-R	411376!
225844	ALLCH	450984
22585	C-R	411376!
225851	CLARK	416271=
225852	CLARK	416024=
225856	CLARK	471281!
22587	C-R	5521
225870	NATL	225872
225872	NATL	58X72X8
2258746	GMC	415138!
225880	NATL	58X80X8
2258893	GMC	370005A
2258907	GMC	370005A
2259040	GMC	415058
225909	CHRYS	416706=
225909	CLARK	416706
225928	CINMI	473232
225929	CLARK	471224!
2259318	GMC	5406
225940	CINMI	471224!
2259540	GMC	455037
225957	CLARK	473010
2259657	GMC	417506
2259662	GMC	370019A
22597	C-R	411376!
2259713	GMC	370002A
2259995	GMC	416271!
225W112	C-R	473214
225W112-M1	C-R	473214
225W116	C-R	470625!
225W116-M1	C-R	470625!
225W16	C-R	474255
225W16M1	C-R	474255
225W18	C-R	450165
225W18	C-R	471801
225W18M1	C-R	450165
225W18M1	C-R	471801
226010	NATL	60X75X8
226017	CLARK	417474
22602	C-R	411376!
226020	SPG	60X80X8
226021	CLARK	473234=
226040	NATL	60X85X8
22604X	MASSE	450400
22605	C-R	411376!
226055	CLARK	471689!
226056	CLARK	471442!
22605X	MASSE	416404!
22606	C-R	411376!
226072	CLARK	410694!
2260834	CHRYS	8121S
226099	CLARK	410496!
226101	CLARK	472705!
226127	CLARK	471870!
226128	CLARK	470774!
22613708.25	TROS	450666
226137X08	TROS	450666
22614	C-R	3095
226147	ALLCH	415995!
22616	C-R	415234!
226169	CLARK	471141=
22617	GARLK	413248
22618	C-R	415234!*
22619	C-R	415234!*
2261VGR	SPG	2261
22622	C-R	415234!*
22623	MASSE	471763
22623X	MASSE	471763
22625	C-R	415234
22626	C-R	415259!*
22628	C-R	415234!
226290	NATL	62X90X10
22630X	MASSE	450068
22632	C-R	415259!
22632	GARLK	415483
2263635	GMC	417181!
2263700	GMC	6846S=
2263701	GMC	417210!
2263712	GMC	416271!
226375	MICH	455005
226375	UNIVE	455005
226387	UNIVE	417485*
226388	MICH	417485
226400	UNIVE	475384*
2264076	GMC	6245S=
2264272	GMC	473447
2264274	GMC	415458!
2264287	GMC	470565!
22644	C-R	55337*
22644	GARLK	415458!
22645	C-R	55337
22647	C-R	415254*
22648	C-R	415254
226481	FMS	64X80X8
22651	C-R	5921
226515	FMS	65X80X8
22653	C-R	722250
226530	SPG	65X90X10
226550	NATL	65X100X10
22656	GARLK	417343!
2265811	CHRYS	8133S
2265D	GOODM	474277
22660	C-R	55268
226620	ALLCH	6759S
2266378	CHRYS	8121S
226672	OILGR	450457
226673	OILGR	50528
2266839	CHRYS	6960
2266894	CHRYS	8597S
2267129	CHRYS	7188S
2267156	CHRYS	7214
2267583	GMC	417596
2267915	GMC	350435
22679M	IH	474264
2268	GOODM	471466!
22680M	IH	473419
22683	GARLK	416664!
226830	NATL	68X90X10
226850	NATL	68X100X13
2268921	CHRYS	13338
2268RC	SUL	471466!
2269	NATEN	416229
226938R91	IH	7866S
226940	CLARK	412119
226942	CLARK	416404=
226944	CLARK	416024=
226961	CLARK	412473=
22698	GARLK	415984!
226A14703	TROS	8705S
226A15403.75	TROS	291295
226A15603.75	TROS	7934S
226B15604	TROS	353120
227006R91	IH	471413!
227050	NATL	70X95X13
227060	NATL	70X100X13
22710	GARLK	417316!
227114R91	IH	418028
227114R91	IH	455137!
22714907.5	TROS	6936S
227154	CLARK	412473=
227160075	TROS	470409!

! Industrial Size/Type * Minor Width Difference

= The U.S. customer service number is 877-4-TIMKEN. The Canadian customer service numbers are 800-565-4927 (English) and 800-565-0438 (French-Canadian).

Mfr. No.	Name	Zero Duplication or Recommended Industrial
227160075	TROS	50409
227178	CINMI	**470712**!
2271832	GMC	**474278**!
227189	CINMI	**417316**!
22719	GARLK	**415960**
2272	UNIVE	6245S=
227221	CINMI	**415047**
227230	NATL	72X95X10
227240	NATL	72X100X12
227272R91	IH	**415449**!
227338R91	IH	100495
227338R91	IH	**417349**
22734X	MASSE	**473225**!
22742	C-R	39821
22745	GMC	**470712**!
22746X	MASSE	**415007**
2274887	GMC	**470565**!
2274890	GMC	**410737**!
2275322	ALLCH	6863S!
2275398	GMC	**418028**
2275550	VICK	**418028**
227572	ALLCH	5128N
2276335	GMC	**470530**!
227662	CLARK	**415035**=
227677	ALLCH	**414268**!
227679	ALLCH	**472299**=
22767905	ALLCH	**472299**=
2276796	GMC	**473231**
2276798	GMC	**473454**
22767D	IH	**450040**
22770	GARLK	**415303**!
2278189	GMC	**415449**!
22782	GARLK	**417344**!
227830	NATL	78X100X10
227841	ALLCH	**471570**!
22785	CHERY	**416444**
227850	ALLCH	410059
227850	ALLCH	**470380**!
2278653	GMC	340400
22789	CHERY	**473228**
2279	NATL	3894V
22791	CHERY	**473016**!
22791	GARLK	**417158**!
22791X	MASSE	**417158**!
2279997	CHRYS	**471538**
228012	FMS	80X100X10!
228020	ALLCH	**411376**!
228030	NATL	80X110X12
2280659	GMC	6592S=
22808	C-R	710439
22809	VICK	5711
22810	VICK	**416167**!
22810807.5	TROS	**450332**
22810X	MASSE	340356
22811	VICK	**415991**
22811	VICK	455146!
228110	C-R	40769S
228112	C-R	50402
22811207.5	TROS	**474254**
22812	GARLK	**416921**!
22812	HI-EQ	**472164**!
228122	CLARK	**417316**=
22812404	TROS	470950!
22812404	TROS	6241S
22812404.75	TROS	6241S
22812407.5	TROS	470950!
22812407.5	TROS	6241S
22812409	TROS	470950!
22812409	TROS	6241S
22812804	TROS	6966S
22812805	TROS	6966S
22812807.5	TROS	**474264**
22813	C-R	58X72X8V
22813204	TROS	7886S
22813207.5	TROS	**471820**
22813604	TROS	**471821**!
22813607.5	TROS	**471821**!
22813807.5	TROS	**473232**!
22814	C-R	710439
22814007	TROS	**473367**!
22814007	TROS	**473367**
22814007.5	TROS	**473367**
22814007.5	TROS	**473367**!
22814014.5	TROS	**473367**
22814405	TROS	**473445**
22814407.5	TROS	**473445**
22814804	TROS	43071S
22814804.5	TROS	**471504**
22814806	TROS	**471504**!
22814807.5	TROS	**471504**!
22815	C-R	225872
22815	C-R	58X72X8!
22816	C-R	225872
22816	C-R	58X72X8!
22817	C-R	58X72X8V!
228176	ALLCH	5246
22818	BR-WN	**415294**!
22818	C-R	58X72X8
22819	BR-WN	**450400**
22819	C-R	710136
228192	ALLCH	473435
2282068	GMC	**471192**
22821	C-R	710183
22822	C-R	225875*
22822	C-R	58X75X11!*
2282265	GMC	**415483**
22823	C-R	225875
22823-61A01	SUZUK	**473179**
22824	C-R	225875
22824	C-R	58X75X11!
228247	ALLCH	340724!
22826	C-R	710129
22826X	MASSE	**470625**!
22827	C-R	225880
22827	C-R	58X80X8!
228277	ALLCH	**474256**
22827X	MASSE	470059
22827X	MASSE	**470380**!
22828	C-R	4408*
22828	C-R	58X80X8!*
22829	C-R	58X78X8
22830	C-R	205035
22831	C-R	225880*
22831	C-R	58X80X8!*
228313KB	TRSCM	493291
22832	C-R	225880
22832	C-R	58X80X8
22833	C-R	225880
22833	C-R	58X80X8V!
22834	C-R	225880*
22834	C-R	58X80X8!*
22835	C-R	493291
22835X	MASSE	**417158**!
22836X	MASSE	50081
228375	MICH	**417344**!
228375	UNIVE	**417344**!
228375SLT	MICH	**417344**!
22837X	MASSE	**415007**
228385	CLARK	**415483**
228387	UNIVE	**417158**!
2283871	GMC	JV1210=
2283872	GMC	5403
228388	MICH	**416404**!
22840	C-R	710136
228400	MICH	**416921**!
228400	UNIVE	**416921**!
22841	C-R	225875
228412	UNIVE	**417134**
228413	MICH	**417134**
2284159	GMC	6638S
22845	C-R	710144
22849	C-R	58X85X10
2284OS	JN-MN	**416404**!*
228500	FMS	716102
22851	C-R	58X85X10!
228520	NATL	85X110X12
228520	SPG	85X110X12
228540	NATL	85X120X12
228547	CLARK	**472258**
22859	C-R	58X88X8
2285OS	JN-MN	**415001**!
2286140	GMC	5711
2286162	GMC	**470954**!
2286171	GMC	**416167**!
22869	C-R	58X90X10
2286911	GMC	**471766**!
2286OS	JN-MN	**415035**!
2286OS	JN-MN	**415035**
22870	C-R	204035
22878	C-R	710268
22881-60G10	SUZUK	710524
22881-82300	SUZUK	223831
228885-R91	IH	370007A
22892	LAU	6863S!
2289513	GMC	6612S
228A10004	TROS	**471516**!
228A10005	TROS	**471516**!
228A10807.5	TROS	**473259**
228A11605	TROS	**471407**
228A12404	TROS	**471276**
228A12407.5	TROS	**471276**
228A13204	TROS	**471344**
228A13207.5	TROS	**471344**
228A13209	TROS	**471344**
228A13215.5	TROS	**471344**
228A13604	TROS	**471827**!
228A13608	TROS	**471827**
228A13608X	TROS	**471827**
228A136X12.5	TROS	**471827**!
228A14010	TROS	**471829**
228A14012.5	TROS	**471829**
228A14804	TROS	**471831**!
228A14806	TROS	1012
228A14806	TROS	1012N
228A14807.5	TROS	**471504**!
228B14014	TROS	**471829**
228B15804	TROS	8704S
229	C-R	5414
229	ROCKW	370003A
229030	NATL	90X120X12
229108	ALLCH	**471958**
22910908	ALLCH	415145N=
22918	VICK	**470954**!
229229	ALLCH	**470625**!
229285R11	IH	5MR1009
229313VHY	TRSCM	204035
2293240	GMC	**471224**
229351	ALLCH	**472409**!
229367	CLARK	**472164**!
229367	CLARK	**472164**
229372	ALLCH	**471255**!
2293807	GMC	**471787**!
2293979	GMC	456618
229510	NATL	95X120X12
2295401	GMC	5405
2295935	GMC	415064
2295936	GMC	370021A
22964	PERSN	**471766**!
2296526	GMC	**471787**!
22966	VICK	**472409**!
22967	VICK	**416865**!
2296767	GMC	**471529**
22969	VICK	**472409**
2297	NATL	39807
2297	WMG	5231
229725	ALLCH	**471570**!
229727	ALLCH	**471570**!
2297HX	SPG	2297
2298288	GMC	5313
229859	CLARK	**472082**
2299	UNIVE	**471192**
229967	ALLCH	410059
229967	ALLCH	**470380**!
229985	CLARK	**471271**!
229985	IH	**471271**!
229995R91	IH	240731
22A2094	HEIL	**415483**!
22A2291	HEIL	**417538**
22A2291	OLIVE	**417538**
22A2383	HEIL	**471267**!
22A2385	HEIL	**474278**!
22A2450	HEIL	**416865**!
22HS376	OSHKO	**417210**!
22X25261A	JOHND	**473474**
22X25561A	JOHND	**473197**
22X26939A	JOHND	J1267=
22X27558B	JOHND	JX1386=
22X31X6AS	ISP	22X31X6
22X32X7SC	TRSCM	222210
22X32X7SC	TRSCM	22X32X7!
22X32X7TC	TRSCM	22X32X7
22X35X7SB	TRSCM	22X35X7
22X35X7SC	TRSCM	22X35X7
22X35X7TC	TRSCM	22X35X7
22X36X7SC	TRSCM	22X36X7
22X36X7TC	TRSCM	22X36X7
22X37X7	SIMRT	22X37X8
22X37X7SC	TRSCM	22X37X7
22X37X7TC	TRSCM	22X37X7
22X38X7AN(35)	ISP	22X38X7
22X38X8SC	TRSCM	22X38X8
22X38X8TC	TRSCM	22X38X8
22X40X7SC	TRSCM	22X40X7
22X40X7TC	TRSCM	22X40X7
22X40X8SC	TRSCM	22X40X8
22X40X8TC	TRSCM	22X40X8
22X42X10SC	TRSCM	22X42X10
22X42X10TC	TRSCM	22X42X10
22X42X7SC	TRSCM	22X42X7
22X42X7TC	TRSCM	22X42X7
22X45X7	SIMRT	22X45X7
22X45X7SC	TRSCM	22X45X7
22X45X7TC	TRSCM	22X45X7
22X47X7SC	TRSCM	22X47X7
22X47X7TC	TRSCM	22X47X7
22X82740A	JOHND	**415066**
22X82741A	JOHND	J1134
22Y618	GWI	470059
22Y618	GWI	**470380**!
22Y618	KEN	470059
22Y618	KEN	**470380**!
22Y815	GWI	**415001**!
23	WGEAR	**471646**!
23000	FUNK	**472572**!
2300768	EATON	**472164**!
230083	SPG	**472924**!
23009	GARLK	**417349**!
230101N	SPG	**412119**

! Industrial Size/Type * Minor Width Difference

= The U.S. customer service number is 877-4-TIMKEN. The Canadian customer service numbers are 800-565-4927 (English) and 800-565-0438 (French-Canadian).

Mfr. No.	Name	Zero Duplication or Recommended Industrial
230106	FWD	370001A
23010610	GMC	340847
23013719	GMC	**473367**
23014004.75	TROS	6283S
23015352	GMC	**417495**
23015975	GMC	**473179**
23016199	GMC	456621V=
23016947	GMC	487397V
23018	GARLK	**417350**!
2301820	GMC	**416888**!
230183	MARMO	**472179**
230183N	SPG	**472179**
23018538	GMC	415073V=
230186	FWD	370001A
2302139	GMC	**416167**!
23026015A	HARWA	230X260X15
23033	CASE	**472258**!
23033	GARLK	**415995**!
23035	C-R	442874
230352	SPG	**472164**!
230387	UNIVE	**417159***
23039	C-R	5585
23040	C-R	411160V
23040	KNICK	5751
230400	MICH	**416654**!
230400	UNIVE	**416654**!
230412	UNIVE	**417486**
23041246	GMC	415073V=
230413	MICH	**417486**
23042	GARLK	**417351**!
230425	BENDI	**471795**
23044H	IH	**473463**
23045095	GMC	**471224**=
23045096	GMC	**471224**!
23045097	GMC	**471472**=
23045344	GMC	**471529**
230462R91	IH	**417316**!
23046430	GMC	415073V=
23049496	GMC	4528N
23049636	GMC	4532N
23049814	GMC	4529N
23049846	GMC	4530
23050	C-R	43109S
23056	C-R	**472150**
23061	C-R	**472150**
23062	C-R	**472150**
23063	C-R	**472150**!
230630	ACF	**473214**!
23064	C-R	**472150**
23065	C-R	**472150**
23068	C-R	**472150**
230689	ACF	**473214**!
23069	C-R	**472150**
23073	C-R	**472150**
230737	SPG	**410737**!
230747	BENDI	**471689**!
230747	GMC	**471689**!
2307OS	JN-MN	415064
230839	CLARK	416795N=
230851	ALLCH	**471765**!
230874R91	IH	7600S
23092	C-R	**411394**!
23093	C-R	**411394**!
2309388	GMC	**471413**
230947	SPICE	J1124
230947	VIC	J1124
2309480	GMC	**417484**!
23095	C-R	**411394**!
23095	CLARK	**412861**
230954	CLARK	**412861**
23096	C-R	**411394**!
23097	C-R	**411394**!
230D4	WHITE	**472144**!
230X260X15	FORSH	230X260X15
230X260X15	SIMRT	230X260X15
230X260X15SC	TRSCM	230X260X15
230X260X15TC	TRSCM	230X260X15
231003	NATL	100X125X12
231005	FMS	100X130X12!
23104	GARLK	**417621**!
231052	SPICE	J1128
231052	VIC	J1128
231053	NATL	105X130X12
231058	NATL	105X140X12
231074	ALLCH	**471652**
2311035	WOOL	**470898**!
231104	NATL	110X130X12
23111	ALLCH	**415995**!
23111	C-R	**411394**!
23113	C-R	**411394**!
231152	NATL	115X140X12
231154	NATL	115X150X12
2311550	GMC	**471466**!
23116	GARLK	**416288**!
23118FX	OSHKO	**470605**!
2311D5	WHITE	**474278**!
23120	C-R	**411394**!
231206	NATL	120X150X12
231208	NATL	120X160X12
231217	ALLCH	**415995**!
231255	NATL	125X160X12
231270	BENDI	**471103**!
2312737	GMC	**474276**!
2312879	GMC	240733
2312883	GMC	**471267**!
231296	CLARK	J1134
23130	C-R	5924
231302	NATL	130X160X12
231302VB	TRSCM	442874
231305	CLARK	J1126
231305	NATL	130X170X15
231324SA	TRSCM	**411394**
231334	CLARK	**416271**!
231335	CLARK	**415138**!
231336	CLARK	**416339**
2313534	GMC	240731
23137	MICH	50026
23137	UNIVE	50026*
23139	C-R	**410694**!
23140	C-R	**410694**!
231405	NATL	140X170X15!
231405	NATL	231404
2314093	GMC	**415371**
2314094	GMC	**416865**
23143	GARLK	**417171**!
2315000	FMC	**455189**
231502	NATL	150X180X12
23152	C-R	**410694**!*
23153	C-R	**412119**
23158	C-R	**410694**!*
231598	AUTOZ	2941
231605	NATL	160X190X15
231608	AUTOZ	16269-1
231609	AUTOZ	16255-1
231610	AUTOZ	16260-1
231611	AUTOZ	427RR
231614	AUTOZ	425RR
231616	AUTOZ	428RR
231617	AUTOZ	446RR
231619	AUTOZ	429RR
231622	AUTOZ	447RR
231623	AUTOZ	445RR
231624	AUTOZ	70800
231625	AUTOZ	439RR
231626	AUTOZ	436RR
231627	AUTOZ	437RR
231628	AUTOZ	438RR
231629	AUTOZ	440RR
231630	AUTOZ	444RR
231631	AUTOZ	442RR
231632	AUTOZ	443RR
231635	AUTOZ	458RR
231636	AUTOZ	453RR
231637	AUTOZ	451RR
231638	AUTOZ	452RR
231640	AUTOZ	435RR
231641	AUTOZ	454RR
231642	AUTOZ	449RR
231643	AUTOZ	455RR
231644	AUTOZ	456RR
231645	AUTOZ	457RR
231646	AUTOZ	450RR
231648	AUTOZ	70484-1
231649	AUTOZ	448RR
231651	AUTOZ	431RR
231652	AUTOZ	432RR
231653	AUTOZ	433RR
231655	BRCWY	**417181**!
231659	AUTOZ	434RR
23167	C-R	**450133***
23169	C-R	**450133**
231705	NATL	170X200X15
231708	CLARK	**471652**=
231717	CLARK	**472705**!
23172	VICK	**471766**!
231733	BRCWY	**415995**!
23175	VICK	**472439**
231751	CLARK	**473446***
23176	VICK	350909
23176	VICK	**471224**!
2317614	GMC	370003A
2317696	GMC	6612S
231798	CLARK	**415349**=
231805	NATL	180X210X15
231811	HYST	**473237**!
23184	C-R	**416444***
231842	CLARK	**417554**!
231843	CLARK	J1138
23185	C-R	**416444**
2318576	GMC	**415995**!
23186	C-R	**416444**
23187	C-R	**416444**
231884	CLARK	**417484**!
231901	GMC	6064
231905	NATL	190X220X16
2319067	GMC	6358
231950	HYST	**416288**!
23199	VICK	**471141**!
232-319	ELRNG	710205
232005	NATL	200X230X15!
2320064	GMC	**450400**
2320312	GMC	**415302**
23206	HYST	**471224**!
232066	CLARK	416961N=
232077	CINMI	**416892**!
23212006	TROS	481834
23212404	TROS	7245
23212408	TROS	**471835**!
23212808	TROS	**473226**
23213204	TROS	**473228**
23213205	TROS	**473228**
23213207	TROS	**473228**
23213208	TROS	**473228**
23213209	TROS	**471193**
23213210.5	TROS	**473228**!
23213211	TROS	**473228**!
23213212	TROS	**473228**!
23213308	TROS	**473228**
23213604	TROS	40185
23213608	TROS	**473229**
23213808	TROS	**482253**
23214004.5	TROS	6356
23214006	TROS	**473010**!
23214006C	TROS	**473010**
23214008	TROS	**473010**
23214012	TROS	**473010**
23214406	TROS	**473234**!
23214408	TROS	**473234**
23214409	TROS	**473234**!
23214412	TROS	**473234**!
232144X10	TROS	**473234**!
23214804	TROS	**472164**!
23214806	TROS	**472164**!
23214806.5C	TROS	**472164**
23214808	TROS	**472164**!
23214810	TROS	**472164**!
23214812	TROS	**472164**!
232148X08	TROS	**472164**!
23216004.5	TROS	6815
23216006	TROS	**471195**!
232173	ALLCH	**471958**
23220004	TROS	**352541**
232205	NATL	220X250X15
23221	GARLK	**476470**
232220	HYST	**471765**!
2322621	GMC	370003A
23236	GARLK	**417181**!
2323680	GMC	**474272**
232398	CLARK	**473245**=
2324	CASE	6575S
23243	VICK	**416476**!
23255	C-R	**416444**
23264H	IH	**415007**
23264HA	IH	**415007**
23264HB	IH	**415007**
232712	CLARK	**415984**!
232714	ALLCH	**472409**!
2327142	ALLCH	**472409**!
2327284	GMC	**415995**!
2327286	GMC	**473231**
2327401	GMC	100495
2327401	GMC	**417349**
23275	GARLK	**417353**!
23276	C-R	710430
23277	C-R	455321
23278	C-R	710168
232780	CINMI	**472397**!
2328067	GMC	**473231**
2328068	GMC	**471267**!
2328069	GMC	**471267**!
2328334	GMC	**417505**
23284	C-R	710121
23286	C-R	710121
232862	CLARK	**416888**!
2328694	GMC	**417505**
2328694	GMC	6864S
23297	C-R	710229
23299	C-R	710231
232995	CLARK	**415234**!
232A14404.5	TROS	40154S
232A15607	TROS	**473454**
232A15607C	TROS	**473454**
232B12405	TROS	7687S
232E14006	TROS	**473010**!
232E14006C	TROS	**473010**!
233	CARVR	**471766**!
233-S443173945	BENDI	470950!
233-S443173945	BENDI	6241S

! Industrial Size/Type * Minor Width Difference

= The U.S. customer service number is 877-4-TIMKEN. The Canadian customer service numbers are 800-565-4927 (English) and 800-565-0438 (French-Canadian).

Mfr. No.	Name	Zero Duplication or Recommended Industrial
23300	C-R	3945
23300	C-R	4131
23300	C-R	493637*
2330111	H-S	473439!
2330114	H-S	471554!
233012	H-S	415960
2330120	H-S	472015!
233014	CLARK	2643N=
233015	CLARK	2644N=
23302VH	TRSCM	41026S
233064SA	TRSCM	473474
2330B	GOODM	417344!
2330C	GOODM	417344!
233124	C-R	450400*
23315606	TROS	340823
233156X06	TROS	332062
23317	MALL	472951
23317	MALL	474252
233186	BRCWY	410308!
2332303	GMC	370003A
233241	CLARK	471730=
23324PSB	TRSCM	480574H
2332D	GOODM	416921!
233313VH	TRSCM	5924
23332VH	TRSCM	40101S!
23332VH	TRSCM	442507
23334PTA	TRSCM	412119
233374SA	TRSCM	413247
233374TA	TRSCM	413247!
2334388	GMC	5481$
23344SA	TRSCM	410987
23344TA	TRSCM	410987!
23346	GARLK	416294!
2334838	GMC	370005A
2335152	GMC	473231
23353PTB	TRSCM	416271
2336	FALKC	415379
2336	FALKC	415379!
2336132	GMC	471570!
2336333	GMC	330385!
23363TB	TRSCM	410825
23364	GARLK	412473!
233773	CLARK	472636=
2338	CONTI	470625!
23382	FWD	472636!
23384SA	TRSCM	417480
23385	NEWPR	710058
23385	NOK	328039
23394	GARLK	417354!
2339F	IH	473462
234	CARVR	471766!
234003	HYST	471281!
234013	ALLCH	473245!
234047	HYST	412119!
23405	CONTI	415234!
23405	IH	415234!
23414012	TROS	8477S
2342	FALKC	415551
23420	C-R	50501
23425	C-R	60X72X8!
23425	C-R	710379
23426	C-R	60X75X8!
23427	C-R	226015
23428	C-R	60X75X8V
23429	C-R	60X75X8
2342OS	JN-MN	415988*
23430	C-R	60X75X8V
2343139	GMC	417505
2343139	GMC	6864S
234319	BENDI	471413
23432	C-R	710093
234321	BENDI	473231!
234322	BENDI	471689!
23436	C-R	226018
23436	C-R	60X78X8!*
23438	C-R	226020
23438	C-R	60X80X8!
23439	C-R	226020
23440	C-R	226020
23440	C-R	60X80X8!
23440	VIC	470898!
23441	C-R	60X80X8V
23442	C-R	226020*
23442	C-R	60X80X8!*
23443	C-R	60X80X8*
23444	C-R	60X80X8V
234449R91	IH	240733
23445	C-R	60X82X7
23446	C-R	712006
23447	C-R	60X85X8!
23447	C-R	60X85X8V
23449	C-R	60X85X8
23450	C-R	4539H
23451	C-R	60X85X8
2345112	GMC	416865
234512	CLARK	100494
234512	CLARK	476470!
23452	C-R	60X85X8
234521	SPERY	470565!
23453	C-R	60X85X12
23456	C-R	710350
234576	CLARK	416865!
23458	C-R	710182
23459	C-R	60X88X8
23460	GARLK	416624!
234631	GMC	470898
234631	SPICE	470898
23464	C-R	1985
23465	C-R	60X90X10
234650	CLARK	471466*
234651	CLARK	471281*
234653	CLARK	470954*=
23466	C-R	60X90X10
23466	VICK	470774!
23467	C-R	60X90X8
23468	C-R	60X95X8
2346838	GMC	473228
23471	C-R	60X90X10*
2347192	GMC	472311!
2347294	GMC	416071
2347374	GMC	350156
2347374	GMC	473096
234761	CLARK	100495
234761	CLARK	417349
23479	C-R	60X95X13
234820	BENDI	473231!
23484	C-R	710276
23486	C-R	60X105X8
23488	C-R	60X110X8
234939	CLARK	470898=
23499	GARLK	417196!
234999	CLARK	4512*
234999	CLARK	714512
23500139	GMC	5163
23500286	GMC	3945
235003	SPG	415458!
2350041	SHEP	472185!
2350061	SHEP	411253!
235009N	SPG	415960
235012N	SPG	416654
23501544	GMC	5424
23501545	GMC	5422
2350160	SHEP	450463
235016N	SPG	416288
23501819	GMC	470954
2350300	SHEP	472397!
2350310	SHEP	473229
23503969	GMC	710258
235070	SPG	416865!
23507225	DETRO	JF2282
23507225	GMC	JF2282
23507226	DETRO	JF2280
23507226	GMC	JF2280
235086N	SPG	417487!
235086N	SPG	417487
235090	ALLCH	JV949=
235095	SPG	416271!
23509591	GMC	5422
23511	GARLK	476424N
235112	C-R	473215!*
23511393	GMC	325277TL
23511394	GMC	325277T
235114	C-R	473225!*
235116	C-R	470059
235116	C-R	470380
235116M1	C-R	470059
235116M1	C-R	470380
23511903	ALLCH	200865
235120	C-R	473231
235120M1	C-R	473231
23512418	GMC	481203N=
23513485	GMC	5422
23513578	GMC	5424
235137	SPG	415137!
235137	SPG	418028
23514147	GMC	5443
235146	SPG	415146!
235146	SPG	415991
23514608	GMC	41537
23515534	GMC	5441
23515634	GMC	5436
23516871	DETRO	480581
23516969	GMC	5424
235183	CLARK	416273
2351945	GMC	5778
23522435	DETRO	472324
23522435	GMC	472324
23522854	DETRO	483054V
23523473+600471	SPG	600471
2352354	GMC	470898
2352381	GMC	470954!
235253	ALLCH	472409=
2352810	GMC	480630!
2352811	GMC	480630!
2352836	GMC	410496!
2352946	GMC	416273!
235296	ALLCH	473438
23529603	ALLCH	480058N=
2353016	GMC	6808N
235312	ALLCH	417344!
23531202	ALLCH	417344!
2353335	GMC	472636!
235354	SPG	416404!
235393	CLARK	473010
235394	CLARK	473454
235404R91	IH	415995!
235430	HYST	417344!
2354323	GMC	410496!
235462	CLARK	412119=
235468	CLARK	471281*
235470	CLARK	471267=
2354727	GMC	415302=
2354728	GMC	471692
2354732	GMC	415995!
235498	SPG	415498
2355	C-R	6X16X5
2355087	GMC	6863S!
235533	VICK	343185
23559	MALL	471688
235593	CLARK	456967V!
2356531	GMC	472636=
2356532	GMC	417487=
235655	CLARK	416664
235657	ALLCH	470530
235665	GMC	473215!
2357	C-R	6X16X7V
235751	CLARK	472016=
2357683	GMC	417505
2357684	GMC	417541
23580	GARLK	415937!
2358463	GMC	410308
2359	C-R	6X16X7V
2359177	NOK	45X70X10
2359469	GMC	473454
235949R	SPG	416500
2360	C-R	6X16X7
23600	C-R	4539H
23601	GARLK	417355!
2360331	GMC	473228
23604	VICK	471570!
236065	ALLCH	471766!
23606R	DIA	45637S
23612406	TROS	8168=
23613	GARLK	416125!
23613208	TROS	410190
23613608	TROS	450143
23614006	TROS	291099
23614808	TROS	472193!
23615207C	TROS	203006!
23615607.5	TROS	350936
2361599	GMC	5406$
23616008	TROS	9015S
23620008.5	TROS	331301N
23620405	TROS	332134
2362158	GMC	733115
236224R91	IH	472164!
236298	CLARK	471735=
23630	C-R	41026S
23631	C-R	473573
23632	C-R	470764!
23632	C-R	50764
23634	C-R	470764
23634	C-R	50764
2363HC	SPG	472409
2363S	SPG	417254
23640	C-R	41026S
23641	C-R	473573
23643	C-R	473474
23644	C-R	473474
23645	C-R	473474=
23645	C-R	473474
23646	C-R	470565!
23646	GARLK	416041
23647	C-R	470565!
23648	C-R	470565!
23649	C-R	470565!
23650	C-R	470565=
23650	C-R	470565
23651	C-R	470565!
23652	C-R	470565!
23653	C-R	470565!
23654	C-R	470565!
23655	C-R	473474*=
23655	GARLK	415379
2365OS	JN-MN	415551
2366034	GMC	410737!
2366119	GMC	417480!
236623	BENDI	471737

! Industrial Size/Type * Minor Width Difference $ F-M Number Is Part Of A Kit
= The U.S. customer service number is 877-4-TIMKEN. The Canadian customer service numbers are 800-565-4927 (English) and 800-565-0438 (French-Canadian).

Mfr. No.	Name	Zero Duplication or Recommended Industrial
236629	CLARK	470565=
23663	C-R	470565!
23665	C-R	470565!
23666	C-R	473475
23667	GARLK	417205!
236679	CLARK	311189
236686	CLARK	476535N=
23670	C-R	473475*
23671	C-R	473475*
23672	C-R	413246
23673	C-R	413246
23676D	IH	471466!
23678	C-R	413246
236783	CLARK	476470=
23679	C-R	413246
2368	C-R	417316!
23680	C-R	413246=
23680	C-R	413246
23681	C-R	413246=
23681	C-R	413246
23682	C-R	413246
23682	GARLK	416339
23683	C-R	480574H
236835	HYST	415379
2368357	GMC	370002A
236836	HYST	J1126
23685	C-R	413246!
23686	C-R	413246
23686	C-R	413246=
23687	C-R	480574H
23690	C-R	412119!
23691	C-R	710210
236922R91	IH	471413
23693	C-R	412119!*
236932	EATON	470605!
236939	EATON	474281!
23694	C-R	5119
23695	C-R	412119*
23698	C-R	710210
23699	C-R	412119!
236A15605	TROS	350936
237	ROCKW	100495
237	ROCKW	5601
23700	C-R	412119!
23701	C-R	412119!
23702	C-R	412119*
23702	C-R	412119!
23702D	IH	450084!
23703	C-R	412119*
237033	ALLCH	472179
23705	C-R	412119!*
23706	C-R	412119*=
23706	C-R	412119
23707	C-R	412119!
23708	C-R	412119!
237082R91	IH	472164!
23709	C-R	412119*
23710	C-R	412119!*
23711	C-R	412119!
237110	C-R	473213!
237111	C-R	450054
237112	C-R	473215!
237112	FAIRB	473215!
237112	JA-MI	473215!
237112	JAE	473215!
237112Q7	GEHL	473215!
237114	C-R	473225!
237114	GR-DV	473225!
237115	C-R	473438
237116	BUC-E	470059
237116	BUC-E	470380!
237116	C-R	470059
237116	C-R	470380
237116	FAIRB	470059
237116	FAIRB	470380!
237116	GR-DV	470059
237116	GR-DV	470380!
237116	LEROI	470059
237116	LEROI	470380!
237116	STEEL	470059
237116	STEEL	470380!
237116M1	C-R	470059
237116M1	C-R	470380
237117	C-R	470059
237117	C-R	470380
237117M1	C-R	470059
237117M1	C-R	470380
237118	C-R	472299
237120	BUC-E	473231!
237120	C-R	473231
237120	ESSIC	473231!
237120M1	C-R	473231
237124	C-R	473237!
23717	C-R	412119!*
2371881	GMC	470898
23719	C-R	412119!*
2371908	GMC	370012A
237197	CLARK	470898*=
23721	C-R	40101S
23721	GARLK	417211!
237224	CLARK	471466*
2372377	GMC	416500
23725	C-R	442507
2372677	GMC	471267!
2372702	GMC	4563V
23729	C-R	412119!
23730	C-R	412119!
23733	GARLK	416345!
23734	C-R	413247!
23735	C-R	413247!
237360	GMC	470059
237360	GMC	470380!
2373OS	JN-MN	415960
23740	C-R	413247!
23741	C-R	413247!
23742	C-R	413247!
23743	C-R	413247!
23744	C-R	200855*
23745	C-R	410987!
23745	GARLK	415697!
23745H	IH	473464!
23745H	IH	473464
23749	C-R	410987!
23751	C-R	710006*
23753	C-R	410987!
23754	C-R	410987!
23755	C-R	410987!
23756	C-R	410987!
237579	CLARK	413469=
23758	C-R	410987!
23759	C-R	410987!
2376	MID	470590
2376	MID-R	470590
23761D	IH	471750!
2376261	GMC	6808N
23763	C-R	410987!
23763	C-R	450686
23763	GARLK	417366!
23765	C-R	416271!
23766	C-R	416271!
23766	WOODB	472070
23767	C-R	416271!
23768	C-R	416271!
23769	C-R	416271!
2376OS	JN-MN	472185!
2377	NATL	713750
23770	C-R	416271!
23771	C-R	416271=
23772	CONTI	471766!
237720	CLARK	415349=
23773	C-R	416271
23773	C-R	416271=
23774	C-R	471271!
23775	C-R	416271!
23776	C-R	416271!*
23778	C-R	416271!*
23779	C-R	416271!
23781	C-R	416271!
23782	C-R	416271!
23788	C-R	416271!*
237909	ALLCH	413247!
237913R1	IH	42101S
237919	CLARK	451143
237933	ALLCH	417191
23794	C-R	416271!
2379514	GMC	472636!
237983	EATON	471271
2379OS	JN-MN	415697!
2379OS	JN-MN	455547
237A15304	TROS	6960
237AW116-L	C-R	410059
237AW116-L	C-R	470380!
237B122115	TROS	8594S
237B12811.5	TROS	9116S
237C140X08.25	TROS	8835S
237F116	C-R	410059
237F116	C-R	470380!
237FM116	C-R	410059
237FM116	C-R	470380!
237W116	C-R	470059
237W116	C-R	470380
237W116M1	C-R	470059
237W116M1	C-R	470380
237W120	C-R	473231
237W120-M1	C-R	473231
237WL116Q4	C-R	470059
237WL116Q4	C-R	470380
237WL117M1	C-R	470059
237WL117M1	C-R	470380
238	ROCKW	4561V
238	ROCKW	5602
2380	C-R	6X22X7!
23800	C-R	416271!
23801	C-R	416271!
238039	CLARK	471271!
2380496	GMC	417316!
23806	C-R	2756N=
23808	C-R	412861
23810	C-R	412861*
23811	C-R	412861*
2381508	GMC	413246
2381585	GMC	253099
23820	C-R	415857
238200	HYST	472164!
23824D	IH	455008
2383276	GMC	417254
23833	C-R	410825
23835	C-R	410825*
23836	C-R	410825
23838	C-R	410825
23839	C-R	410825
2383OS	JN-MN	450474*
23840	C-R	410825
23841	C-R	410825*
23841	C-R	410825*
23842	C-R	416071
23844	C-R	417480!
23845	C-R	417480!
23846	C-R	416071
238491	CLARK	JV1132=
2384945	GMC	470898
23851D	IH	450593!
2385627	GMC	471570!
23857	C-R	712375
23858	C-R	455650=
2385S	NATL	4250
23860	C-R	710006
2386619	GMC	418028
23870	C-R	5487
23870101	JOHND	415958
23873H	IH	415960
2387418	GMC	472164!
2387420	GMC	472164!
23880	C-R	710170
2388334	GMC	370023A
23885	C-R	226150
23888	C-R	710528
238888	EATON	471271!
238918	ALLCH	472012
23891D	IH	473213!
238945	ALLCH	412920!
239	ROCKW	5603
2390257	GMC	5408
239092	CLARK	4084*=
239103	NATL	224015
23914404C	TROS	9178S
239150	NATL	5696
239152	NATL	35X47X7
239152	WMG	35X47X7
239169R91	IH	415041
2391842	GMC	472164!
239191	NATL	480630!
239192	NATL	223535
239193	NATL	35X47X7
239193	WMG	35X47X7
239218	CLARK	470954*=
2392508	GMC	370015A
2394035	GMC	370019A
2394036	GMC	370021A
2394037	GMC	370181A
2395373	GMC	7006S
2396498	GMC	413470
2396499	GMC	413246
239675	CLARK	471267=
2396869	GMC	470898
2396870	GMC	470898
2396880	GMC	240731
2396T2	WHITE	471787!
239718	CLARK	473204=
2397420	GMC	472164!
23977X	LIGET	440972
2398209	GMC	415458!
2398220	GMC	415458!
2398409	GMC	8792S
2398465	GMC	470954
239892	CLARK	4084=
239A12708	TROS	9342S
23PS221	C-P	471472!
23R009	SHOV	472492!
23W015	SHOV	411253!
2400084	CHRYS	470898!
2400163	CHRYS	8935S
24003	C-R	4160
2400300	CHRYS	7300S
2400566	GMC	470954!
240076	ACF	50631
24010	GARLK	415035
24012408	TROS	472843

! Industrial Size/Type * Minor Width Difference

= The U.S. customer service number is 877-4-TIMKEN. The Canadian customer service numbers are 800-565-4927 (English) and 800-565-0438 (French-Canadian).

Mfr. No.	Name	Zero Duplication or Recommended Industrial
24012808	TROS	473437
24013206	TROS	291099
24013404	TROS	40369S
24014004	TROS	**473232**!
24014008	TROS	**473232**
24014010	TROS	**473228**!
24014208	TROS	7457N
240143	KOHL	**473234**
24014406	TROS	**473235**!
24014408	TROS	**473235**!
24014411.25	TROS	**473235**
24014412	TROS	**473235**
24014412.5	TROS	**473235**!
24014805	TROS	7607
24014806	TROS	**472185**!
24014808	TROS	**472185**!
24014811.25	TROS	**472185**!
24015204	TROS	44053
24015206	TROS	**472070**
24015211.25	TROS	**472070**
24015408	TROS	473451!
24015408	TROS	**473462**!
24015408	TROS	**473462**!
24015608	TROS	**472439**
24015612	TROS	**473464**
24015612.5	TROS	**472439**
24016009	TROS	5121
240164	CLARK	**472636**
240178	KOHL	**415995**!
2401857	GMC	**413248**
24020004	TROS	40410S
24020008	TROS	**471424**!
240211	RELEE	**471264**!
24021604	TROS	341022
24027015A	HARWA	240X270X15
240288	ALLCH	**470625**!
24035	GARLK	**417356**!
2403627	GMC	442380
2403628	GMC	442380
2403665	GMC	40769S
240398	SPG	**471267**!
240400	NATL	6703S
2404052	CHRYS	**484058**
2404121	CHRYS	8515N
2404134	CHRYS	**473235**
2404135	CHRYS	7216
2404215	CHRYS	8695S
2404216	CHRYS	8704S
240480	NATL	6597S
240495	NATL	343185
240495	WMG	343185
2405328	GMC	240733
24055	GARLK	**417357**
2405935	GMC	3592
24075	CANAD	416041
24075	GARLK	**416130**!
2407876	GMC	**415449**!
2407877	GMC	**415995**!
240840	NATL	6597S
24085	LAU	**471570**!
2408OS	JN-MN	**417491***
240912	HYST	**415138**!
240913	HYST	**417362**!
24095	LAU	**410102**
24097	C-R	5698
240A14404	TROS	**473235**!
240A14812	TROS	**472185**!
240A16004	TROS	**472319**
240A20004C	TROS	4148
240A20004C	TROS	**471424**!
240B15603.5	TROS	6985
240C15606	TROS	**472439**
240C15606C	TROS	331227H
240X270X15	FORSH	240X270X15
240X270X15	SIMRT	240X270X15
240X270X15SC	TRSCM	240X270X15
240X270X15TC	TRSCM	240X270X15
240X280X16SC	TRSCM	240X280X16
240X280X16TC	TRSCM	240X280X16
2410236	GMC	**472164**!
24110	C-R	4019N
2411035	WOOL	**475384**
241130L	C-R	**470409**
241130L	C-R	50409
2411979	GMC	**330385**!
2413360	GMC	370120A
241343	ACF	**418028**
241343	ACF	455137!
24137	MICH	**471554**!
24137	UNIVE	**471554**!
24140	Y-T	**415196**!
24150	MICH	**471567**!
24150	UNIVE	**471567**!
24151-73B00	SUZUK	222030
241543	AVCO	204020
241543	AVCO	204505!
24156	UNIVE	**450340**
2416276	GMC	5473
24169	DAVEY	**418028**
24169	DAVEY	455137!
2416949	GMC	**416282**
2416950	GMC	**416282**
241706	FULLE	**417484**
2417294	GMC	**473215**!
2417295	GMC	**471765**!
2417296	GMC	5751
2417297	GMC	5751
2417302	GMC	**416167**!
2417303	GMC	**416167**!
2417306	GMC	6649
2417308	GMC	6872S
2417311	GMC	415317
2417312	GMC	**417316**=
2417316	GMC	**410308**!
2417317	GMC	**410308**
2417318	GMC	**415234**!
2417319	GMC	**415234**
2417330	GMC	**415960**
2417331	GMC	**415960**
2417332	GMC	**472636**!
2417333	GMC	**472636**!
2417334	GMC	**417487**!
2417334	GMC	**417487**
2417336	GMC	**410825**=
2417337	GMC	**410825**
2417340	GMC	5403
2417342	GMC	5405
2417343	GMC	**471766**!
2417344	GMC	**471766**!
2417345	GMC	7006S
24174	DAVEY	**473231**!
24175	DAVEY	**470530**!
24175	MICH	**471684**!
24175	UNIVE	**471684**!
24176	VICK	240731
2417701	GMC	370181A
2417702	GMC	370021A
2417779	GMC	**470565**!
2417780	GMC	**416654**!
2417781	GMC	456618
24177902	ALLCH	**471192**
2417791	ALLCH	**471192**
241790	ALLCH	**472179**
24182	UNIVE	450033
24183	MICH	450033
2418RC	SUL	**417316**!
2419982	GMC	**416654**
24201470	GMC	4934
24201871	GMC	3543
24201991	GMC	224840
24202535	GMC	4950
24202835	GMC	3543
24204330	GMC	100165*
24204540	GMC	4583
2420630	GMC	6808N
24207336	GMC	4333N
24209839	GMC	4598
242120	C-R	**473367**
242120	C-R	**473367**!
242120M1	C-R	**473367**!
242120M1	C-R	**473367**
242133X09.5C	TROS	8610
242134X08	TROS	8610
2422854	GMC	**417355**!
2422854	GMC	485497
2422855	GMC	**417355**!
2422855	GMC	485497
2422856	GMC	5453$
2422859	GMC	**417480**!
2422869	GMC	40769S
2422922	GMC	50631
2423396	GMC	**416271**!
24255	C-R	**471887**
24255	GARLK	416556!
24255	GARLK	**472157**
24258	C-R	**412040**
24260	C-R	**412040**
2426024	GMC	**417210**!
2426026	GMC	**417210**!
24261	C-R	**412040**
24263	C-R	**412040**
24270	C-R	**412040**
24278	C-R	**412040**
24281	C-R	**411500**
2428573	GMC	HU042A
24286	C-R	**411500**
242860	ALLCH	**415371**
24287	C-R	**411500**
2429131	GMC	**471787**!
2429141	GMC	**471538**!
2429241	GMC	476574N
24294	C-R	**411500**
24295	C-R	**411500**=
24297	GARLK	**416891**!
24299	C-R	**411500**
242B120	C-R	**473367**
242BM120	C-R	**473367**
242GG120	C-R	**473367**
242GG120	C-R	**473367**!
242H120	C-R	**473367**
242H120	C-R	**473367**!
24300	C-R	**411500**=
24302	C-R	**413478**
24302	GARLK	**416135**!
2430D	GOODM	**417349**
2430OS	JN-MN	**417541***
24311	C-R	**411500***
243112	C-R	470950
243112	C-R	6241S
243112M1	C-R	470950!
243112M1	C-R	6241S
243113	C-R	50254=
243114	C-R	**474264**
243114	GR-DV	**474264**
243114M1	C-R	**474264**
243115	C-R	**473439**!
243116	C-R	**471820**
243118	C-R	**471821**!
243118M1	C-R	**471821**!
243119	C-R	**450065**
24312	C-R	**411500***
243120	C-R	**473367**!
243120	C-R	**473367**
243120	GOODM	**473367**!
243120	GOODM	**473367**
243120M1	C-R	**473367**!
243120M1	C-R	**473367**
243120ML	BUC-E	**473367**
243120ML	BUC-E	**473367**!
243122	C-R	**473445**
243123	C-R	50327
24314J	DIA	**474276**!
2431525	GMC	**415995**!
2431526	GMC	**415995**!
24316	C-R	**474254**
2431667	GMC	**471267**!
24316M1	C-R	**474254**
24318	C-R	**471818**
243190	BRCWY	370036A
2431D5	WHITE	**417316**!
24320	C-R	**413478**
24321	C-R	62X80X10V
24322	C-R	**413478**
24322	CONTI	**473458**!
24323	C-R	**413478**
24325	C-R	**413478***
24328	C-R	**413478**
2432D	GOODM	**415995**!
24333	C-R	450104
24334	C-R	450104
24335	EATON	**473235**!
243354SA	TRSCM	**411245**
2433567	GMC	100495
2433567	GMC	**417349**
243363VAY	TRSCM	3210
2433650	GMC	**415458**!
2433651	GMC	**415458**!
2433667	GMC	**470898**
24340	C-R	450104*
2434156	GMC	**470898**!
24345	C-R	450104
2434696	GMC	**412119**
2434707	GMC	480574H
2434D	GOODM	**417487**
2434OS	JN-MN	**450765**!
24355	C-R	**411245**!
24356	C-R	**411245**!
2435738	GMC	**416167**!
2435738	MOHWK	**416167**!
2435739	GMC	**480630**!
2435740	GMC	**410496**!
2435E	GOODM	**417488**!
2436463	GMC	6808N
243649	BRCWY	415137!
243649	BRCWY	**418028**
2436547	GMC	**415995**!
243663	BRCWY	**411253**!
2436953	GMC	**417316**!
24370	C-R	**411245**!
243707A	HARWA	24X37X8
24371	C-R	**411245**!
24372	C-R	**411245***=
2437999	GMC	**415995**!
2438255	GMC	**417316**!
2438877	GMC	7866S
2438878	GMC	7866S
2438OS	JN-MN	**416345**!
2438OS	JN-MN	455033

! Industrial Size/Type * Minor Width Difference $ F-M Number Is Part Of A Kit
= The U.S. customer service number is 877-4-TIMKEN. The Canadian customer service numbers are 800-565-4927 (English) and 800-565-0438 (French-Canadian).

Mfr. No.	Name	Zero Duplication or Recommended Industrial
2439186	GMC	**473242**
2439188	GMC	5361=
24396	C-R	**411245**!
24397	C-R	**411245**!
243B120	C-R	**473367**
243BB120-L	C-R	**473367**
243BB120-L	C-R	**473367**!
243BM112	C-R	**473367**
243F114	C-R	**474264**
243HMS120	C-R	**473367**
243T120	C-R	**473367**
243W112	C-R	470950
243W112	C-R	6241S
243W112-M1	C-R	470950
243W112-M1	C-R	6241S
243W114	C-R	**474264**
243W114-M1	C-R	**474264**
243W118	C-R	**471821**!
243W118-M1	C-R	**471821**!
243W120	C-R	**473367**!
243W120	C-R	**473367**
243W120-M1	C-R	**473367**
243W120-M1	C-R	**473367**!
243W375	CONE	5520
243WL112	C-R	470950!
243WL112	C-R	6241S
243WL114	C-R	**474264**
243Z120	C-R	**473367**
243Z120	C-R	**473367**!
2440720	GMC	6638S
2440721	GMC	6638S
2440722	GMC	6638S
24408	C-R	**417073**
2440D	GOODM	**455019**!
244112	C-R	**471276**
244116	C-R	**471344**
244124	C-R	**471504**!
24412408	TROS	**450776**!
244124M1	C-R	**471504**!
24412804	TROS	**471862**
24412808	TROS	**471862**
24413208	TROS	**470487**!
244132X08	TROS	**470487**!
244135X08	TROS	8695S
24413604	TROS	**471316**
24413606	TROS	**471316**
24413609	TROS	6336S
24414408	TROS	**474265**
24414608	TROS	50075=
24414808	TROS	**470334**!
24415008	TROS	450269
24415208	TROS	**471866**!
24416	C-R	**474256**
24416008	TROS	**473459**
24416208	TROS	**450472**!
244169	ALLCH	**473010**
24416M1	C-R	**474256**
24420006C	TROS	7751H
24420008	TROS	**471870**!
244210A	HARWA	24X42X8
2442177	GMC	6270
2442178	GMC	6270
2442179	GMC	6270
2442180	GMC	5401
2442181	GMC	7512S=
24429	DAVEY	**416921**!
2442911	GMC	**415995**!
2442912	GMC	**415995**!
2442946	GMC	**471267**!
2443570	GMC	**417316**!
244415	GMC	HU009A
2444160	GMC	442380
2444414	GMC	HU066A
2444415	GMC	HU009A
24445	C-R	**417073**
24448	C-R	**417073**
2444860	GMC	733067
2444861	GMC	370036A
2444861	GMC	370349A
24449	C-R	**417073**
2445-6623	HINO	710371
2445-6624	HINO	710371
244530	GMC	**415001**!
244531	ACF	40468
244531	GMC	40468
24455	GARLK	**416888**!
24459	C-R	3210
244631	SPICE	**470898**
2446372	GMC	**470954**!
2446691	GMC	**415458**
2446748	GMC	**471787**!
2446RC	SUL	**416107**!
2446RC	SUL	455073
24472709	SIMRT	370220A
24473	C-R	8636=
24475	GARLK	**416153**!
24476	VICK	450313
2447666	GMC	**472164**!
2447696	GMC	100495
2447696	GMC	**417349**
2447861	GMC	**417349**!
2447RC	SUL	**471750**!
2448142	GMC	7188S
2448159	GMC	353135
2448159	GMC	**474278**!
24482	C-R	55346
244888	ALLCH	**470687**
2448882	ALLCH	**470687**
2448RC	SUL	**417344**!
244961	ALLCH	**473215**!
24496101	ALLCH	**473215**!
24498	GARLK	**416892**!
2449RC	SUL	**471765**!
244B16008C	TROS	**473459**
244W120	C-R	**473367**
244W120	C-R	**473367**!
2450	C-R	343104
245040	BRCWY	**416654**!
24504098	GMC	**473241**
2451326	GMC	**472560N**!
24516	EATON	**473016**!
2451769	GMC	**473243**=
245187	BRCWY	**416654**
2453129	CHRYS	**484054**
2453130	CHRYS	291295
2453131	CHRYS	7537S
2453133	CHRYS	8293S
2453134	CHRYS	8610
2453135	CHRYS	8168=
2453136	CHRYS	**472070**
2453137	CHRYS	**473317**
2453138	CHRYS	7686S
2453139	CHRYS	6952S=
2453140	CHRYS	340356
2453142	CHRYS	**472572**!
2453143	CHRYS	**473452**
2453144	CHRYS	6855N=
2453145	CHRYS	**470774**!
2453146	CHRYS	205017
2453147	CHRYS	40769S
2453952	GMC	6638S
245396	BRCWY	475348N
2454230	GMC	**473242**
245443	BRCWY	5M466
245472	BRCWY	**472636**!
2455043	GMC	HU110A
2455044	GMC	733067
2455045	GMC	370007A
2455047	GMC	**417505**
2455092	GMC	370012A
2455093	GMC	730016
2455130	GMC	**413246**
2455143	GMC	**412119**
2455151	GMC	**472636**!
2455943	GMC	**418028**
24566	LAU	50209
2456738	GMC	370005A
2456739	GMC	370005A
2456752	GMC	370021A
24573976	GMC	40375
2457433	GMC	370019A
2457RC	SUL	**416345**!
2457RC	SUL	455033
2458346	GMC	**472636**!
2459229	GMC	**471539**!
245964	ACF	**473447**
245A15808.25	TROS	9449
245G114	C-R	**474264**
245G120	C-R	**473367**
245G120	C-R	**473367**!
245HMS120	C-R	**473367**
245HMS120	C-R	**473367**!
24607	FI-CO	**450604**
2461313	GMC	**415854**
24613408	TROS	8940S
2461368	GMC	**471887**
24614	CONTI	**451583**!
24614804	TROS	323119
2461RC	SUL	**415076**
24620	C-R	62X80X10
24620	C-R	62X80X9!
2462289	GMC	**471271**!
24625	GARLK	**415138**!
24626	C-R	62X80X10
24629	C-R	62X82X8
2462993	GMC	**415458**!
24630	C-R	350942
2463199	GMC	415983N!
24635	C-R	226285
24635	C-R	62X85X8!
24638	C-R	226285*
24638	C-R	62X85X8*
24640	C-R	226285*
24640	C-R	62X85X8*
2464131	GMC	**471413**
24642	C-R	226285
2464259	GMC	**417316**!
2464492	CHRYS	9487
24645	GARLK	**417247**!
2464528	GMC	**417211**!
2464660	GMC	**415995**!
2464660	GMC	**415995**!
24649	C-R	62X88X8
24650	C-R	50560
246564	ALLCH	**416292**
24656403	ALLCH	**416292**
24659	C-R	62X90X10
2465S	SPG	2465
2465SS8	SPG	2465
2466057	GMC	**417134**
24661	C-R	62X90X10
24662	C-R	62X90X10!
2466842	CHRYS	**471539**
24670	C-R	6575S
2467131	GMC	**473228**!
24676	HYST	**470605**!
24678	C-R	62X100X7*
24679	C-R	62X100X7*
24679	C-R	62X100X8*
2467929	GMC	**415995**!
2467929	GMC	**415995**!
24680	LIGET	203034
2468537	GMC	**415458**
2468T2	WHITE	**415449**!
24692603	ALLCH	**472258**
2469341	GMC	6808N
2469545	GMC	**473228**
246991	GMC	**415458**
246A11607.5	TROS	**450341**
246A14806	TROS	200354
246A15607.5	TROS	7107A=
246A20606	TROS	6590S
246B12407.5	TROS	**450456**!
246B14804	TROS	204038
246C14806	TROS	200354
246C14806.5	TROS	203002
246D15603.75	TROS	7107A=
24708	VICK	**450639**
2470LPD	JN-MN	**412027**
2470OS	JN-MN	**412027**
24710	C-R	63X78X8
247100	ALLCH	200118=
247165	ALLCH	**473452**
247167	ALLCH	**473452**
2471OS	JN-MN	**455151**
247224	ACF	**472164**!
247224	GMC	**472164**!
2472290	GMC	**415458**
2472341	GMC	5957S
24725	C-R	63X80X8
24734	VERSA	370119A
2473RC	SUL	**417491**
2474278E50	SUZUK	1981
247548	ALLCH	**470530**=
24755	C-R	63X85X10
24758	C-R	63X85X10
2475900	IVECO	713094
24761	JOHND	**476838**!
2476620	GMC	**410737**!
247667	HYST	JV1944=
24767	LAU	**471649**!
2476973	GMC	**415447**
24770	C-R	63X88X8
24772-61A00	SUZUK	473823
2477708	GMC	370001A
2477867	RFT	713140
24780-79001	SUZUK	710347
24780-79001	VILA	710347
24780-83010	SUZUK	223215
2478083000	SUZUK	223215
2478362	GMC	**471141**!
2478368	GMC	**471466**!
24785	C-R	1935*
2478619	IVECO	713143
247868	ALLCH	411978N=
24786802	ALLCH	411978N=
24788	C-R	63X90X10
247893	VICK	**472560N**
247A14708.25	TROS	5836
247A15108.25	TROS	6781
247FF124	AT-PL	6489
24800	C-R	1935
24800	LISLE	CQ2000=
24800	LISLE	RD2000
2480035	GMC	452742
2480RC	SUL	**472636**!
24813208	TROS	**473440**!
24814004	TROS	40286

! Industrial Size/Type * Minor Width Difference

= The U.S. customer service number is 877-4-TIMKEN. The Canadian customer service numbers are 800-565-4927 (English) and 800-565-0438 (French-Canadian).

Mfr. No.	Name	Zero Duplication or Recommended Industrial
24814008	TROS	474274
24814408	TROS	473236!
24814804	TROS	472179
24814807.75	TROS	472179
24814808	TROS	472179
24814810	TROS	472179
24814811.25	TROS	472179
24814812	TROS	472179
24815008	TROS	450285
24815208	TROS	473449
24815307.75	TROS	7600S
24815408C	TROS	473452
24815604	TROS	42421S
24815608	TROS	472572!
2481RC	SUL	418028
2481RC	SUL	455137!
24820004	TROS	40389S
24820006	TROS	8804S=
24820008	TROS	472492!
24820604	TROS	41013S
2482279	GMC	415483
248373	ALLCH	6222
248374	ALLCH	471344
248426	ALLCH	204038
24842601	ALLCH	204038
2484551	GMC	471466!
2484560	GMC	472397!
2484561	GMC	472397!
2485	F-R-H	415041
248542	VICK	240356
24860	C-R	40555
24860	C-R	40555S!
24863	C-R	40555
24863	C-R	40555S!
248630	HYST	472015!
24865	C-R	710027
24868	C-R	39803
24875	C-R	43290S
24879	C-R	473476
2487938	GMC	471689!
24880	C-R	40337S
24881	C-R	472029
24882	C-R	472029
24883	C-R	472029=
24886	C-R	3942
24888	C-R	5109*
2488828	GMC	415483
2488829	GMC	415483
24889	C-R	410752
24894	C-R	410752
24895	C-R	471271!
24896	C-R	471271!
24897	C-R	471271!
24898	C-R	471271!
24899	C-R	471271
248A13208	TROS	474281!
248A13808	TROS	450274
248A14808	TROS	473447
248A15607C	TROS	473179
248A15608	TROS	473179!
248A15610.5	TROS	473179!
248B20005	TROS	5113
248B20005	TROS	7721!
248C20006	TROS	331107N
248GG116-L	C-R	473228
248W116	C-R	473228
248Z116	C-R	473228
24900	C-R	471271!
24901	C-R	442380
24902	C-R	442380
24904	C-R	442380
24905	C-R	471271!
24906	C-R	7018N=
24907	C-R	471271!
24908	C-R	471271!
24909	C-R	471271!
24910	C-R	471271!
24911	C-R	471271!
249122	C-R	473234!
249124	C-R	472164!
249124M1	C-R	472164!
24913	C-R	471271
24914	C-R	471271
24916	C-R	471271
24917	C-R	4250
2491RC	SUL	416654!
2492	TEKNI	471538!
24920	C-R	6785
2492115	GMC	730003
2492116	GMC	HU036A
24923	C-R	4250
24924	C-R	410496!
24925	C-R	410496!
24926	C-R	410496!
24928	C-R	410496!
24929	C-R	40496S=
2492952	GMC	415991
2492952	GMC	415991!
2492RC	SUL	417621!
24930	C-R	410496!
2493047	GMC	415995!
24931	C-R	410496!
24932	C-R	410496!*
24933	C-R	410496!*
24934	C-R	470605*
24935	C-R	410496!*
24937	C-R	410496!
24938	C-R	410496!
24939	C-R	470605!
2493RC	SUL	472636!
24940	C-R	470605!
24941	C-R	470605=
24942	C-R	470605!
24943	C-R	470605!
24945	C-R	470605!
24946	C-R	470605!
24947	C-R	470605!
24948	C-R	470605!
24949	C-R	473274
24951	C-R	473274
24954	C-R	470605!
24955	C-R	470605!
24957	C-R	415449!
24958	C-R	415449!
24959	C-R	415449!
2495OS	JN-MN	415725!*
2495RC	SUL	416654!
24960	C-R	415449!
24964	C-R	4561V
2496482	GMC	415995!
2496482	GMC	415995!
24965	C-R	415449!
2496560	GMC	415458
2496561	GMC	415483
2496562	GMC	415458
24967	C-R	415449!*
24969	C-R	415449!
24970	C-R	415449!
24971	C-R	415449!
24973	C-R	415449!
24974	C-R	415449
24974	C-R	415449=
24975	C-R	415449!
24976	C-R	415449!
24977	C-R	415449!
24978	C-R	415449!
24979	C-R	415449!
24980	C-R	415449!
24982	C-R	415449!
2498220	GMC	370048A
2498220	GMC	380048A
24984	C-R	3894V
24984	C-R	415449!
24986	C-R	415449!
24988	C-R	415449!*
24988	C-R	415449*
24989	C-R	415449
2498OS	JN-MN	417262!
24990	C-R	415449!
24991	C-R	3894V
24999	C-R	415449!
2499919	GMC	472636!
2499LPD	JN-MN	415683
2499LUP	JN-MN	415683
249A-007	BENDI	480630
249A16008C	TROS	2043
249C116	C-R	473228
249M128-L	C-R	473454
24A103	FWD	471765!
24A108	FWD	473228
24A110	FWD	473232
24A214	FWD	417158!
24B275112	FWD	450463
24B275122	FWD	473236!
24C50099	FWD	411253!
24C50115S	FWD	473467!
24C50117	FWD	472572!
24C50120	FWD	471224!
24C50136	FWD	470625!
24C50204	FWD	471231!
24C50219	FWD	471649!
24C50301	FWD	472397!
24C50315	FWD	473245!
24C50316	FWD	472636!
24C50320	FWD	473475
24C50332	FWD	450332
24C50350	FWD	413247!
24C50352	FWD	472164!
24C50360	FWD	471870!
24C50365	FWD	470898!
24C50394	FWD	473227
24C50405	FWD	50405
24C50480	FWD	323138!
24C50520	FWD	471272!
24C50756	FWD	472394
24C50779K	FWD	473238!
24C55004	FWD	417316!
24C55013	FWD	415995!
24C55018	FWD	476470
24C55021	FWD	415021
24C55023	FWD	415023
24C55026	FWD	455026
24C55027	FWD	415027
24C55027	FWD	415027!
24C55029	FWD	416125!
24C55035	FWD	415035
24C55035	FWD	415035!
24C55088K	FWD	415088!
24C55088K	FWD	415088
24C55093	FWD	411376!
24C55114K	FWD	455584
24C55137	FWD	418028
24C55137	FWD	455137!
24C55146	FWD	415991
24C55146	FWD	455146!
24C55147	FWD	415449!
24C55150	FWD	415150!
24C55177	FWD	415379
24C55177	FWD	415379!
24C55195	FWD	472157!
24C55195	FWD	472157
24C55196	FWD	415196!
24C55203	FWD	455203
24C55271	FWD	415725!
24C55272	FWD	416706!
24C55281	FWD	417349
24C55305	FWD	415991
24C55305	FWD	455146!
24C55315	FWD	415984!
24C55355	FWD	417158!
24C55364	FWD	416664!
24SR100	IG-RA	471192
24X35688A	JOHND	455253
24X35X7SC	TRSCM	222410
24X35X7SC	TRSCM	24X35X7!
24X35X7TC	TRSCM	24X35X7
24X37X7	NATL	24X37X8
24X37X7	SIMRT	24X37X8
24X37X7SC	TRSCM	24X37X7
24X37X7TC	TRSCM	24X37X7
24X38X7SC	TRSCM	24X38X7
24X38X7TC	TRSCM	24X38X7
24X40X7	NATL	1990
24X40X7SC	TRSCM	24X40X7!
24X40X7TC	TRSCM	24X40X7!
24X42X10SC	TRSCM	24X42X10
24X42X10TC	TRSCM	24X42X10
24X42X7	ISP	24X42X7
24X42X8	SIMRT	24X42X8
24X46X7SC	TRSCM	24X46X7
24X46X7TC	TRSCM	24X46X7
24X47X7SC	TRSCM	24X47X7
24X47X7TC	TRSCM	24X47X7
24X52X7SC	TRSCM	24X52X7
24X52X7TC	TRSCM	24X52X7
25-1358	TW-CO	471689!
25001	CONTI	471267!
25001-2813	GARLK	415064
25004	SPG	417316!
25005	C-R	4624V
25005	HK-SY	415960!
25007	C-R	444042!
25008H	IH	5MR71
25008HB	IH	5MR71
25011	C-R	415449!
25011	SPG	416921!
250112	C-R	471835!
250114	C-R	473226
250116	ALLCH	473228
250116	C-R	473228
250116	JA-MI	473228
250116	JAE	473228
250116M1	C-R	473228
250118	C-R	473229
250118	GOODM	473229
250118M1	C-R	473229
250119	C-R	482253
250119	CLARK	482253
25012	CLIN	472258
250120	C-R	473010
250120	GOODM	473010
250120	JEFF	473010
250120K	GOODM	473010
250120M1	C-R	473010
250121	C-R	450260
250122	C-R	473234
250122M1	C-R	473234
250124	AT-PL	472164!

! Industrial Size/Type * Minor Width Difference

= The U.S. customer service number is 877-4-TIMKEN. The Canadian customer service numbers are 800-565-4927 (English) and 800-565-0438 (French-Canadian).

Mfr. No.	Name	Zero Duplication or Recommended Industrial
250124	C-R	**472164**!
250124M1	C-R	**472164**!
250130	C-R	**471195**!
25013S	SPG	**415995**!
25014808	TROS	200600
25016	C-R	**415449**!
25016	CONTI	**471267**!
250187R91	IH	**472924**!
2501CS	CASE	450415
2502	C-R	**352541**
25020	C-R	**415449**!
25021	C-R	**415449**!
25022	C-R	**415449**!
250220	ALLCH	**470625**!
250221	ALLCH	470059
250221	ALLCH	**470380**!
250222	ALLCH	**473016**!
250225	ALLCH	**472070**
25024	C-R	**415449**!
25025	C-R	**415449**!
25028	C-R	8975S
25028015A	HARWA	250X280X15
25030	GARLK	**415725**!
25033	C-R	**415001**!
25035	C-R	**415001**!
25036	C-R	**415001**!
25038	C-R	**415001**!
25042	C-R	**415001**!*
25043	C-R	**415001**!*
250437VD	SPG	250437V
25044	C-R	**415001**!
25045	C-R	**415001**!
25046	C-R	**415001**!
25047	C-R	**415001**!
2504T2	DIA	**472636**!
25050	HYST	**473225**
25054	C-R	**415001**!
25058	C-R	**415001**!
250580	ALLCH	**472397**!
25059	C-R	**415001**!
2505S	SPG	2505
2505V	SPG	2505V
25060	C-R	**415001**=
25060	EUROS	120X150X12
250605	ALLCH	**415960**!
250618	ALLCH	**414268**=
250646C91	IH	42101S
25065	C-R	**415001**
250653R91	IH	**471689**!
250659R91	IH	**470712**!
25067	C-R	**416273**
25068	C-R	**416273**!
250689CA	SPG	1126
25069	C-R	**416273**!
2506925	CHRYS	**415449**!
25070	C-R	**416273**
25071	C-R	**416273**!
25072	C-R	**416273**
25072	SPG	**415072**
25072S	WABCO	**415072**
25073	C-R	**416273**!
25074	C-R	**416273**
25075	C-R	**416273**
25077	C-R	**416273**
25078	C-R	200851
25080	GARLK	**416865**!
250801	ALLCH	**472258**!
25082	C-R	**415449***
250832	ALLCH	**415035**
250832	ALLCH	**415035**!
250833	ALLCH	**473228**
250834	ALLCH	**473245**=
250849	ALLCH	JV1582=
250857	ALLCH	200851
25088	C-R	**455079**!
25089	C-R	**455079**!
2508931	CHRYS	343185
2508969	CHRYS	**415458**
250907R91	IH	**476470**
250907R91	IH	**476470**!
25091	C-R	**455079**!*
25093	C-R	**455079**!
25094	C-R	**455079**!
250A-116	BUC-E	**473228**!
250A15609.5	TROS	**414045**!
250C116	C-R	**473228**
250CP120-M1	C-R	**473010**
250L116	C-R	**473228**
250W112	C-R	**471835**!
250W112-M1	C-R	**471835**!
250W116	C-R	**473228**
250W116-M1	C-R	**473228**
250W118	C-R	**473229**
250W118-M1	C-R	**473229**
250W120	C-R	**473010**
250W120-M1	C-R	**473010**
250W122	C-R	**473234**
250W122-M1	C-R	**473234**
250W124	C-R	**472164**!
250X280X15	FORSH	250X280X15
250X280X15	SIMRT	250X280X15
251-407-629	VW	65X80X8
251-407-641A	VW	225500
2510	C-R	**350435**
25100	C-R	**415082***
25102	C-R	**415082**
25102	CONTI	**471539**!
25104	C-R	**415082**
25105	C-R	**415082**
25106	C-R	**415082**
25108	C-R	**455655**!
2511	C-R	**350435**
2511035	WOOL	**415711**
25111	C-R	**455655**!
25111	SPG	**416229**
25112	C-R	**455655**!
251124L	C-R	**473234**
251128L	C-R	**473454**
25113	C-R	**455655**=
25113	C-R	**455655**
2511337	CHRYS	6872S
25114	C-R	355732
25116	C-R	470059
25116	C-R	**470380**
251191	ALLCH	**471765**!
2512	C-R	**350435**
2512254	CHRYS	6808N
251232	ALLCH	**450273**
2512332	CHRYS	415983N!
2512BRGE	SABO	712512
25130	GARLK	**417278**
25132	STANT	35001
2513602	CHRYS	370086A
25137	UNIVE	**481443**!*
251378R91	IH	**417350**!
251379R91	IH	450313
2514	C-R	**350435**
25140	C-R	4525V
251449R91	IH	**474279N**
25146	C-R	3136N
25146	SPG	415146!
25146	SPG	**415991**
25147S	SPG	**415449**!
2514OS	JN-MN	**416292**
25150	MICH	**481568**!
25150	UNIVE	**481568**!*
2515119	CHRYS	**410737**!
251511SS0	SPG	**251511**
2515187	CHRYS	**415483**
25156	SPG	**417621**!
2515OS	JN-MN	**412119**!
25160	C-R	5401
25162	MICH	**481644**
25162	SPG	**417181**!
25162	UNIVE	**481644**
25169	STAR	240735
25171	C-R	226480
25175	MICH	471337
25175	UNIVE	471337
251756	ALLCH	**473445**
25176	C-R	710130
25182	UNIVE	**474273**
25183	MICH	**474273**
25185	C-R	64X80X8!
251862	ALLCH	**471341**!
25190	C-R	710277
25196	C-R	710256
251G124	C-R	**472164**!
2520	MID	**471689**!
2520	MID-R	**471689**!
252024	CLARK	710015
252050C91	IH	**471413**!
252051C91	IH	**473231**!
252051C92	IH	**473231**!
2520742	BENDI	340210
252081R91	IH	**417316**!
252097R91	IH	**417967**!
252098R91	IH	**455191**
2521	MID	**471649**!
2521	MID-R	**471649**!
252117	ALLCH	**415379**!
252117	ALLCH	**415379**
25214	HARRI	**472299**
252148X09.5C	TROS	8460N
25215	HARRI	**471270**!
252153	ALLCH	**417316**!
252154	ALLCH	**411376**!
25215608	TROS	5126
2521RC	SUL	**471766**!
252253	SPERY	**455134**!
252277	ACF	470059
252277	ACF	**470380**!
25227763	GR-RP	411178=
2522RC	SUL	**415035**
2522RC	SUL	**415035**!
2523BG	SPG	**472016**
2523RC	SUL	**416339**
2523RC	SUL	455031!
252464	GMC	5070
252491	ALLCH	**473475**
2524RC	SUL	**472924**!
2525063	CHRYS	41257!
252602	ALLCH	**471224**!
252612	ALLCH	**471192**
252649	ALLCH	**472287**!
252707R1	NAVST	414
252815	ALLCH	**472179**
252825	ALLCH	**472636**!
252835R91	IH	**471785**!
252849	ALLCH	**472258**!
252882R91	IH	**415449**!
252903	ALLCH	**474253**!
2530	C-R	240435*
25305	NATL	**415991**
25305	NATL	**415991**!
253052	ALLCH	**416271**!
253099	NATL	473099
2531	CHRYS	**471750**!
2531	TORO	450545
25310	GARLK	**417262**!
25310	TORO	**471733**
253100	TORO	204035
253109	TORO	**417485**
25312	TORO	**415449**!
253122	TORO	**471643**!
25312VH	TRSCM	43290S
25313TB	TRSCM	**472029**
25315	TORO	**471554**!
25318	TORO	**415449**!
25319	TORO	**473215**!
2531A	DURA	**471750**!
2532	ALOY	6489
25321	TORO	**471141**!
25322	TORO	**415449**!
25322VB	TRSCM	442380
25323	TORO	50419
25323TB	TRSCM	**471271**!
25324	TORO	**471820**
253248	ALLCH	**473463**
25324SA	TRSCM	**471271**
25324TA	TRSCM	**471271**
25325	TORO	**416664**!
253265	ALLCH	**473367**!
253265	ALLCH	**473367**
25327	TORO	**472070**
25328	TORO	**471442**!
25329	TORO	**471442**!
253297	ALLCH	40438S
2533	ALOY	8430S
2533	TORO	**471787**!
25330	TORO	**410308**!
25331	SPG	**417191**
25331	TORO	470059
25331	TORO	**470380**!
25332	TORO	**471554**!
253341	ALLCH	**471571**
253354SA	TRSCM	**410496**
253358	ALLCH	**416919**
25336	TORO	**471649**!
25338	TORO	**471224**!
253382	ALLCH	**417316**!
253388	ALLCH	**416892**!
2533D	GOODM	**417621**!
2534	ALOY	4148
2534	TORO	**416664**!
253403	ALLCH	**476470**
253413	ALLCH	**470687**
25343	TORO	**471224**
25343TB	TRSCM	**473274**
25344	TORO	**471413**
253441	ALLCH	**472179**
25345	TORO	42352S
25347	TORO	**471344**
25348	TORO	**473448**
2535	ALOY	3195
25350	C-R	**415082**
25350	GARLK	**417358**
253502VAY	TRSCM	8975S
253504SSB	TRSCM	**415449**
253515	ALLCH	**471271**!
25352	TORO	**471870**!
25352VH	TRSCM	444042!
25353	TORO	**474254**
25354	TORO	**474256**
253541	ALLCH	**472185**!
253544SA	TRSCM	**415001**
253545TA	TRSCM	**415001**!
25354SA	TRSCM	**415449**

! Industrial Size/Type * Minor Width Difference

= The U.S. customer service number is 877-4-TIMKEN. The Canadian customer service numbers are 800-565-4927 (English) and 800-565-0438 (French-Canadian).

Mfr. No.	Name	Zero Duplication or Recommended Industrial
25354TA	TRSCM	415449
253579	ALLCH	416273
2536	ALOY	3227
2536	TORO	471750!
25360	TORO	200354
253632	ALLCH	473243
2536480	CHRYS	3095
2536481	CHRYS	3103!
25364SA	TRSCM	416273!
25364SA	TRSCM	416273!
2536694	CHRYS	3103!
253691	ALLCH	472636!
2536D	GOODM	417172
2536T2	DIA	470898!
2536T2	WHITE	470898
2537	ALOY	8622
2537	TORO	471765!
25370	TORO	340797
253701	ALLCH	471692!
2537153	CHRYS	474278!
2537153	CHRYS	6859S
25374SA	TRSCM	455079!
253752CA	SPG	1984
2537689	CHRYS	471466!
2537899	CHRYS	7013S
253792	ALLCH	55141
2538	ALOY	203025
2538	TORO	415449!
25384SA	TRSCM	455280
2538557	CHRYS	473234!
2539	ALOY	473677
2539	TORO	451583!
25391	TORO	415088
25391	TORO	415088!
25393TB	TRSCM	476514
25396	TORO	472560N!
25400	GARLK	415645!
254002	SPERY	416043
254032-C91	IH	370120A
2540D	GOODM	415021
25410	C-R	226515
25410	C-R	65X80X8
2541245	WHITE	55539=
25415	C-R	65X82X8
25416	C-R	226515
25416	C-R	65X80X8!
2541730	CLARK	710010
25418	C-R	710094
25419	C-R	712005
25420	C-R	226520
25420	C-R	65X85X10!
25420	C-R	65X85X8
25420407.25	TROS	5877
25421	C-R	65X85X8V
25421	C-R	710373
25422	C-R	226520
25422	C-R	65X85X10!
25424	C-R	710373
254241R92	IH	473205!
25425	C-R	65X88X10
25425	C-R	65X88X8!
25427	C-R	65X90X10V
254270	NATL	254270
25427F	DIA	6597S
25428	C-R	226530
25428	C-R	65X90X10!
25429	C-R	226530
25429	C-R	65X90X10!
2542OS	JN-MN	455480!*
25430	C-R	226530
25430	C-R	65X90X10!
25430	C-R	65X90X7*
25431	C-R	65X90X10V
25433	C-R	65X88X10
25434	C-R	226530*
25434	C-R	65X90X10!*
25435	C-R	65X95X8
25436	C-R	65X95X7
25436	C-R	65X95X8*
2543OS	JN-MN	417504*
25440	C-R	65X100X10
25440	C-R	65X100X7
25441	C-R	65X100X10V
25442	C-R	65X100X10!
25443	C-R	65X100X10!*
25446	C-R	65X100X10V
25450	C-R	65X105X8*
25450	GARLK	417359
25455	C-R	65X110X8*
254632	SPICE	471272!
2546357	CLARK	415425
254635C91	IH	473231!
25465	C-R	65X120X8
254662C91	IH	473231!
254670	ALLCH	471787!
254882	ALLCH	472439
25488202	ALLCH	472439
254883	ALLCH	416404!
25492	LAU	470954!
2549RC	SUL	417513
254A14407.5	TROS	470596
2550	C-R	240435
2550106	CHRYS	370001A
25514	C-R	65X80X8V
25515	C-R	5123
25518	C-R	226510
25519058	GMC	473241
2551RC	SUL	415988
25522192	GM	427RR
25523327	GMC	473241
25524	MALL	471652
2552584	CHRYS	370023A
255267R91	IH	415034!
255281C91	IH	100495
255281C91	IH	417349
255282C91	IH	100495
255282C91	IH	417349
25531	US-EL	473214!
25534760	GMC	320691
25544	BOSTN	471224!
25548	LAU	471267!
255502	HYST	473228!
25560	C-R	413479
25561	C-R	413479
25569	C-R	413479
25570	C-R	415988
25576	C-R	415302
25577	C-R	415302
25587	C-R	415302
25589	C-R	415449!
2559054	CHRYS	370001A
2559054	CHRYS	380001A
2559055	CHRYS	370023A
2559304	CHRYS	370001A
2559304	CHRYS	380001A
2559685	CHRYS	370023A
2559689	CHRYS	370001A
2559689	CHRYS	380001A
2560	C-R	240435
2561031	CHRYS	370023A
256116	C-R	410190
256118	C-R	450143
256124	C-R	472193!
256124M1	C-R	472193!
25614007.5	TROS	473444
25614407.5	TROS	473446
25614804	TROS	471141!
25614807.5	TROS	471141!
25614808	TROS	471141!
25615208	TROS	473450
25615604	TROS	473238!
25615607.5	TROS	473238
25615608	TROS	473238!
25615608.5	TROS	2689S
25616007.5	TROS	472144!
25617	VICK	472015!
256192	BRCWY	472397!
256199	BRCWY	415449!
2562	C-R	50514
25620	C-R	415302
25620	GARLK	417254
25620007.5	TROS	417487
25620008	TROS	472924!
25620408	TROS	451948
2562047	CHRYS	HU009A
25620804	TROS	40566S
25620805	TROS	470898!
25620806C	TROS	470898!
25620807	TROS	470898
25620807.5	TROS	470898
25620810	TROS	470898
25620811	TROS	470898
256210A	HARWA	25X62X10
25625	C-R	415302
256258	BRCWY	473215!
256273	BRCWY	450593!
25630	C-R	455311
256302SP	TRSCM	5123
256345TA	TRSCM	413479
25640	C-R	415988
25641	C-R	415988
25649	C-R	415988
25650	GARLK	417360
25660	C-R	415988
25661	C-R	415988
2566OS	JN-MN	472157!
2566OS	JN-MN	472157
256725R91	IH	470530!
256726R91	IH	412920!
2567RC	SUL	471466!
25680	GARLK	416107!
2569	C-R	350435*
256909	ALLCH	473215*=
256938R91	IH	210914
25699	C-R	415988*
256A20006.25	TROS	472082
256A20008	TROS	472082
256A20807	TROS	9599S
256B20007.5	TROS	472082
256D15206	TROS	473450!
256E14808	TROS	471141
2570	C-R	350435*
2570T2	WHITE	471538!
25710	C-R	9943
25710	GARLK	417361
25712	C-R	417481
25713	C-R	417481
25714	C-R	415244!*
25720804	TROS	42101S
257209R91	IH	471564
25721	C-R	417481
257215R91	IH	471766!
257304R91	IH	471684!
257310R91	IH	470625!
25745	C-R	455280
25747	C-R	455280
25748	C-R	455280
25750	C-R	455280*
25755	C-R	455280
257739R91	IH	481073
25784	ALLCH	415041
25790301	ALLCH	471267!
257920R91	IH	415034!
257970R91	IH	415034!
2580	C-R	240435*
258019	RELEE	417556
25809D	IH	473427
258120	HYST	7512SSO
258121C91	IH	415035
25814808	TROS	471141!
25850	GARLK	417362!
258511A	WALKE	472185!
258511A	Y-T	472185!
258511AA	WALKE	413469!
258511AB	WALKE	417501
258511AB	Y-T	417501
258511AC	WALKE	415991
258511AC	WALKE	455146!
258511AD	Y-T	473010!
258511AH	Y-T	473179!
258511AK	EATON	471103!
258511AK	WALKE	471103!
258511AK	Y-T	471103!
258511AM	Y-T	470625!
258511AO	Y-T	470898
258511AQ	Y-T	415551
258511AR	Y-T	476838!
258511AW	Y-T	455134!
258511B	WALKE	410102
258511B	Y-T	410102
258511BB	WALKE	415150!
258511BE	Y-T	50528
258511BG	Y-T	352541
258511BH	EATON	455480!
258511BH	Y-T	455480!
258511BJ	Y-T	415371
258511BL	EATON	415074
258511BL	Y-T	415074
258511BM	EATON	415938
258511BM	Y-T	415938
258511BN	EATON	473231!
258511BN	Y-T	473231!
258511BR	Y-T	416556!
258511BR	Y-T	472157
258511BT	EATON	473237!
258511BT	Y-T	473237!
258511BV	EATON	415074
258511BV	Y-T	455480!
258511BY	EATON	417621!
258511BY	Y-T	417621!
258511C	WALKE	416339
258511C	WALKE	455031!
258511C	Y-T	416339
258511C	Y-T	455031!
258511CC	WALKE	417366!
258511CC	Y-T	417366!
258511D	WALKE	470059
258511D	WALKE	470380!
258511D	Y-T	470059
258511D	Y-T	470380!
258511DD	WALKE	417567
258511DD	Y-T	417567
258511E	WALKE	451469
258511E	Y-T	451469
258511EE	WALKE	473467!
258511EE	Y-T	473467!
258511F	WALKE	415645!
258511F	WALKE	455104

! Industrial Size/Type * Minor Width Difference

= The U.S. customer service number is 877-4-TIMKEN. The Canadian customer service numbers are 800-565-4927 (English) and 800-565-0438 (French-Canadian).

Mfr. No.	Name	Zero Duplication or Recommended Industrial
258511FF	*WALKE*	470950!
258511FF	*WALKE*	6241S
258511FF	*Y-T*	470950!
258511FF	*Y-T*	6241S
258511G	*WALKE*	**474281!**
258511G	*Y-T*	**474281!**
258511GG	*WALKE*	**416444**
258511H	*WALKE*	**417357**
258511H	*WALKE*	455192!
258511H	*Y-T*	**417357**
258511H	*Y-T*	455192!
258511HH	*WALKE*	**417351!**
258511HH	*Y-T*	**417351!**
258511J	*EATON*	**415351!**
258511J	*WALKE*	**415351!**
258511J	*Y-T*	**415351!**
258511JJ	*WALKE*	**473242**
258511JJ	*Y-T*	**473242**
258511K	*WALKE*	**411376!**
258511K	*Y-T*	**411376!**
258511KK	*WALKE*	**471413!**
258511KK	*Y-T*	**471413**
258511L	*WALKE*	**472572!**
258511L	*Y-T*	**472572!**
258511LL	*WALKE*	**474264**
258511LL	*Y-T*	**474264**
258511M	*WALKE*	**471224!**
258511M	*Y-T*	**471224!**
258511MM	*WALKE*	**473245!**
258511N	*WALKE*	**417181!**
258511N	*Y-T*	**417181!**
258511NN	*EATON*	**415991**
258511NN	*EATON*	455146!
258511NN	*WALKE*	**415991**
258511NN	*WALKE*	455146!
258511O	*WALKE*	**415449!**
258511O	*Y-T*	**415449!**
258511P	*WALKE*	**416865!**
258511PP	*WALKE*	**473367**
258511PP	*WALKE*	**473367!**
258511PP	*Y-T*	**450065**
258511Q	*WALKE*	**416888!**
258511QQ	*WALKE*	**473232**
258511R	*WALKE*	**415196!**
258511R	*Y-T*	**415196!**
258511R91	*IH*	**410708**
258511RR	*WALKE*	**472397!**
258511RR	*Y-T*	**472397!**
258511S	*WALKE*	**417316!**
258511S	*Y-T*	**417316!**
258511SS	*WALKE*	55238
258511SS	*Y-T*	55238
258511T	*WALKE*	**471750!**
258511T	*Y-T*	**471750!**
258511TT	*WALKE*	**470682**
258511U	*WALKE*	**473464!**
258511U	*WALKE*	**473464**
258511U	*Y-T*	**473464**
258511U	*Y-T*	**473464!**
258511UU	*WALKE*	**471760**
258511UU	*Y-T*	**471760**
258511V	*WALKE*	**471570!**
258511V	*Y-T*	**471570!**
258511VV	*WALKE*	**473313**
258511VV	*Y-T*	**473313**
258511W	*WALKE*	**415036**
258511WW	*WALKE*	**471192**
258511WW	*Y-T*	**471192**
258511X	*WALKE*	**471747!**
258511XX	*WALKE*	**473214!**
258511XX	*Y-T*	**473214!**
258511Y	*WALKE*	**473234**
258511Y	*Y-T*	**473234**
258511YY	*WALKE*	**473215!**
258511YY	*Y-T*	**473010**
258511Z	*WALKE*	**470088**
258511Z	*Y-T*	**470088**
258511ZZ	*WALKE*	**471424!**
258511ZZ	*Y-T*	**471424!**
25890	*GARLK*	417363
25897	*WHITE*	**473215!**
258T2	*WHITE*	**415449!**
25907C	*DIA*	**417134**
25909	*STAR*	**471737**
25910	*GARLK*	**416666**
25914613.5	*TROS*	6098=
259147	*ACF*	**410496!**
2592	*C-R*	240435*
259220	*RELEE*	**471567!**
25925	*GARLK*	417364
25930	*C-R*	5957S
259323C91	*IH*	42101S
25935	*C-R*	5957S
2594	*C-R*	**350435**
259407PTBJ	*TRSCM*	712598
25950	*C-R*	450725N=
25951	*C-R*	**411330!**
25956	*C-R*	**411330!**
25960	*C-R*	**411330!**
25965	*C-R*	226610
25966	*C-R*	**411330!**
25968	*C-R*	710092
25970	*C-R*	**411330!**
25978404	*ALLCH*	**417349**
259805	*HYST*	J1117
25981-82300	*SUZUK*	710116
259854R91	*IH*	**415449!**
259895R92	*IH*	**415072**
25990	*C-R*	712598
259960	*ALLCH*	6324S=
25996D	*IH*	**415025**
25CJ1-1	*BR-WN*	**473228**
25FTD1	*BR-WN*	**450639**
25M-1	*BR-WN*	**471766!**
25W1	*BR-WN*	**471766!**
25X35X7	*NATL*	222510
25X35X7SC	*TRSCM*	25X35X7!
25X35X7TC	*TRSCM*	25X35X7!
25X36X7ASN(32)	*ISP*	25X36X7
25X36X8SC	*TRSCM*	25X36X8
25X36X8TC	*TRSCM*	25X36X8
25X37X7SC	*TRSCM*	25X37X7
25X37X7TC	*TRSCM*	25X37X7
25X38X7SC	*TRSCM*	25X38X7!
25X38X7TC	*TRSCM*	25X38X7!
25X40X7SC	*TRSCM*	25X40X7
25X40X7TC	*TRSCM*	25X40X7
25X40X8SB	*TRSCM*	25X40X7
25X42X10SC	*TRSCM*	25X42X10
25X42X10TC	*TRSCM*	25X42X10
25X42X6AN	*ISP*	25X42X6*
25X42X8SC	*TRSCM*	25X42X8
25X42X8TC	*TRSCM*	25X42X8
25X45X8SC	*TRSCM*	25X45X8
25X45X8TC	*TRSCM*	25X45X8
25X46X7SC	*TRSCM*	25X46X7
25X46X7TC	*TRSCM*	25X46X7
25X47X7SC	*TRSCM*	25X47X7
25X47X7TC	*TRSCM*	25X47X7
25X50X10SC	*TRSCM*	25X50X10
25X50X10TC	*TRSCM*	25X50X10
25X50X8AS	*ISP*	25X50X8
25X52X10SC	*TRSCM*	25X52X10
25X52X10TC	*TRSCM*	25X52X10
25X52X7SC	*TRSCM*	25X52X7!
25X52X7SG	*TRSCM*	25X52X7!
25X52X7TC	*TRSCM*	25X52X7!
25X52X8SC	*TRSCM*	25X52X8
25X52X8TC	*TRSCM*	25X52X8
25X62X10	*FORSH*	25X62X10
25X62X10	*SIMRT*	25X62X10
25X62X10AS	*ISP*	222580
25X62X10SC	*TRSCM*	25X62X10
25X62X10TC	*TRSCM*	25X62X10
25X62X7AS	*ISP*	25X62X7
26-68493	*MERCM*	**471272**
26-8272	*B-L-H*	**415991**
26-8272	*B-L-H*	455146!
26-97530	*MERCM*	**471570**
260004R91	*IH*	**470354**
26001-5239	*GARLK*	**471413**
26001-6069	*GARLK*	8792S
26001-6133	*GARLK*	**254287**
26001-6284	*GARLK*	341022
26001-6304	*GARLK*	310841
26001-7007	*GARLK*	240470
26001-7011	*GARLK*	342805
26001-7012	*GARLK*	342805
26001-7013	*GARLK*	8792S
26001-7020	*GARLK*	340387
26001-7021	*GARLK*	340724!
26001-7024	*GARLK*	351487
26001-7033	*GARLK*	**470954!**
26001-7034	*GARLK*	**471554**
26001-7055	*GARLK*	**471689**
26001-7080	*GARLK*	340400
26001-7090	*GARLK*	442110=
26001-7093	*GARLK*	310841
26001-8000	*GARLK*	7014S
260017023	*GARLK*	**471466**
26002612	*GMC*	7013S
26004811	*GMC*	2286
2600888	*CHRYS*	**473214!**
26009	*LAU*	**471255!**
26009831	*GMC*	7013S
26010792	*GMC*	710166
2601099	*CLARK*	9613S
260110	*CLARK*	450129
260110	*CLARK*	**472826!**
26011061	*GMC*	4795V
26011597	*GMC*	3543
260135R91	*IH*	470059
260135R91	*IH*	**470380!**
26018700	*GMC*	4795V
26025152	*GMC*	221925
26025959	*GMC*	7013S
26025977	*GMC*	7013S
26026792	*GMC*	8610
26026973	*GMC*	7013S
26029137	*GMC*	710166
26029139	*GMC*	8660S
26030	*GARLK*	**417365**
26031569	*GMC*	710101
26033578	*GMC*	2043
26037278	*GMC*	7013S
26037309	*GMC*	4762N
2603865	*TREME*	3638
2603979	*TREME*	7692S
26041M	*DIA*	**411500**
26042234	*GMC*	7013S
26043	*MINNM*	**473231**
26043126	*GMC*	7013S
2604491	*FORD*	4127*
26047378	*GMC*	8835S
26050	*GARLK*	**415072**
26057167	*GMC*	3747
26057638	*GMC*	PSK-1
2605RC	*SUL*	**417211!**
2606104	*TREME*	4528N
26064028	*GMC*	710506
26064029	*GMC*	710507
26064030	*GMC*	710508
260666	*HYST*	**416892!**
2607380	*CLARK*	4144V*=
2607RC	*SUL*	**471649!**
261-A5291	*BENDI*	**471267!**
261-A5292	*BENDI*	**471564**
26108	*C-R*	**451143**
26110	*C-R*	**451143**
2611035	*WOOL*	**417474**
261122	*C-R*	**473235!***
26118	*C-R*	**412871!**
26120	*C-R*	**412871!**
26121	*C-R*	**412871!**
2612252	*ALLCH*	**471737**
26123	*C-R*	**412871!**
26124	*C-R*	**412871!**
26126	*C-R*	**412871!**
26128	*C-R*	**412871***
26128	*C-R*	**412871**
26130	*C-R*	**412871!**
2613075	*DANA*	6936S
2613128	*DANA*	**471344**
26132	*C-R*	**412871!**
261336	*SPERY*	**472164!**
26134	*C-R*	**412871!**
26137	*MICH*	**471231!**
26137	*UNIVE*	**471231!**
26138	*C-R*	**412871!**
26139	*C-R*	**412871!**
26141	*C-R*	**410708***
26142	*C-R*	**413248**
26144	*C-R*	**413248***
26146	*C-R*	**410708**
26147	*C-R*	**410708***
26148	*C-R*	**413248**
26149	*C-R*	**410708**
26150	*C-R*	**413248**
26150	*MICH*	**474253**
26150	*UNIVE*	**474253!**
26152	*C-R*	**413248**
26153	*C-R*	**413248**
26154	*C-R*	**410708**
26156	*UNIVE*	470515
261576C91	*IH*	40566S
26162	*MICH*	**471645**
26162	*UNIVE*	**471645**
26163	*C-R*	**450412***
26165	*C-R*	**450412**
26167	*C-R*	**450412**
26168	*C-R*	**450412**
26169	*C-R*	43077S
261733	*SPERY*	**471765!**
26175	*C-R*	**415483**
26175	*MICH*	471686
26175	*UNIVE*	471686
26176	*C-R*	**415483**
26178	*C-R*	**415483!**
26179	*C-R*	**415483!**
26180	*C-R*	**415483!**
26182	*C-R*	**415483**
26182	*UNIVE*	473412
26183	*C-R*	**415483!**
26183	*MICH*	473412
26184	*C-R*	**415483!**
26185	*C-R*	**415483**
26186	*C-R*	**415483**
26186	*C-R*	712511

! Industrial Size/Type * Minor Width Difference

= The U.S. customer service number is 877-4-TIMKEN. The Canadian customer service numbers are 800-565-4927 (English) and 800-565-0438 (French-Canadian).

Mfr. No.	Name	Zero Duplication or Recommended Industrial
26186	*HYST*	**471820**
26188	*C-R*	**415483**
26189	*C-R*	**415483**!
26190	*C-R*	**415483***
26191	*C-R*	**415483**
26193	*C-R*	**417079**
26193-0291	*GARLK*	**471649**!
26193-0541	*GARLK*	**471192**
26193-0714	*GARLK*	**473229**
26193-13	*GARLK*	**330385**!
26193-1329	*GARLK*	**472015**!
26193-1482	*GARLK*	**471138**!
26193-3130	*GARLK*	**415938**
26193-4701	*GARLK*	**472954**
26193-5085	*GARLK*	**481537**
26193-51	*GARLK*	**471526**!
26193-6099	*GARLK*	**481397**
26193-6103	*GARLK*	**471529**
26193-6113	*GARLK*	1049
26193-6156	*GARLK*	**471270**!
26193-6169	*GARLK*	**471652**
26193-6186	*GARLK*	7412S
26193-7482	*GARLK*	**455583N**!
26193-7501	*GARLK*	**330699**!
26193-7504	*GARLK*	**472705**!
26193-7510	*GARLK*	**472311**!
26193-7512	*GARLK*	1037
26193-7517	*GARLK*	**481163**!
26193-7518	*GARLK*	**471766**!
26193-7520	*GARLK*	340853
26193-7521	*GARLK*	**472354**!
26193-7534	*GARLK*	**476842**
26193-8356	*GARLK*	**481481**
26193-88	*GARLK*	**471466**!
26193-8949	*GARLK*	**481481**
26193-8952	*GARLK*	**471633**!
26193-9489	*GARLK*	**471570**!
26193-9490	*GARLK*	**471649**!
26193-9675	*GARLK*	**450400**
26193-9879	*GARLK*	335924N
26193-9971	*GARLK*	**481181**!
26193-9975	*GARLK*	**472015**!
26193-9991	*GARLK*	**481443**!
26193-9992	*GARLK*	**480581**
261937488	*GARLK*	**471551**!
26194	*C-R*	**417079**
26195	*C-R*	**417079**
261A5293	*BENDI*	**471466**!
261D4	*WHITE*	50631
2620068	*MERCM*	**471466**
2620070	*MERCM*	340724!
26202	*C-R*	**415458**!
2620250	*MERCM*	**470954**!
2620256	*ACDEL*	7107A=
2620280	*ACDEL*	1012N
2620281	*ACDEL*	224045
2620282	*ACDEL*	227040
2620283	*ACDEL*	203006
2620284	*ACDEL*	203008
2620285	*ACDEL*	205044
2620286	*ACDEL*	2081
2620287	*ACDEL*	2146
2620288	*ACDEL*	4250
2620289	*ACDEL*	2669
2620290	*ACDEL*	2689S
2620292	*ACDEL*	291295
2620293	*ACDEL*	292594
2620294	*ACDEL*	331301N
2620294A	*GMC*	331301N
2620295	*ACDEL*	340356
2620297	*ACDEL*	40185
2620298	*ACDEL*	**471787**
2620299	*ACDEL*	40769S
2620300	*ACDEL*	40973S
2620301	*ACDEL*	41257
2620302	*ACDEL*	4148
2620304	*ACDEL*	442380
2620305	*ACDEL*	**470380**
2620306	*ACDEL*	**473228**
2620307	*ACDEL*	**450143**
2620308	*ACDEL*	**482253**
2620309	*ACDEL*	**451948**
2620310	*ACDEL*	**470487**
2620311	*ACDEL*	**471862**
2620312	*ACDEL*	**450776**
2620313	*ACDEL*	**451182**
2620314	*ACDEL*	**410987**
2620315	*ACDEL*	**412119**
2620316	*ACDEL*	**415458**
2620317	*ACDEL*	**473228**
2620318	*ACDEL*	4148
2620319	*ACDEL*	**472560N**
2620320	*ACDEL*	**410987**
2620321	*ACDEL*	5109
2620322	*ACDEL*	**473228**
2620323	*ACDEL*	**410825**
2620326	*ACDEL*	51322
2620327	*ACDEL*	**484054**
2620328	*ACDEL*	**484058**
2620329	*ACDEL*	5499=
2620330	*ACDEL*	**417485**
2620331	*ACDEL*	5573
2620332	*ACDEL*	**415857**
2620333	*ACDEL*	**417480**
2620334	*ACDEL*	5589
2620335	*ACDEL*	**414045**
2620336	*ACDEL*	5871
2620337	*ACDEL*	6064
2620338	*ACDEL*	6077
2620339	*ACDEL*	6241S
2620340	*ACDEL*	493291
2620343	*ACDEL*	6781
2620344	*ACDEL*	6815
2620345	*ACDEL*	6840S
2620346	*ACDEL*	9568
2620348	*ACDEL*	6952S=
2620349	*ACDEL*	6954S
2620350	*ACDEL*	44053
2620351	*ACDEL*	6960
2620352	*ACDEL*	6966S
2620353	*ACDEL*	205017
2620354	*ACDEL*	6985
2620355	*ACDEL*	**473317**
2620358	*ACDEL*	7245
2620359	*ACDEL*	7537S
2620360	*ACDEL*	7600S
2620361	*ACDEL*	7607
2620362	*ACDEL*	7686S
2620363	*ACDEL*	7687S
2620364	*ACDEL*	5113
2620366	*ACDEL*	**472164**
2620367	*ACDEL*	7886S
2620368	*ACDEL*	**471821**
2620369	*ACDEL*	7934S
2620370	*ACDEL*	7994S
2620371	*ACDEL*	8121S
2620372	*ACDEL*	8133S
2620373	*ACDEL*	8139
2620374	*ACDEL*	8168=
2620375	*ACDEL*	8243
2620376	*ACDEL*	8293S
2620377	*ACDEL*	**473228**
2620378	*ACDEL*	8429S
2620379	*ACDEL*	6960
2620380	*ACDEL*	8477S
2620381	*ACDEL*	8549S
2620382	*ACDEL*	8594S
2620383	*ACDEL*	8597S
2620384	*ACDEL*	8660S
2620385	*ACDEL*	8695S
2620386	*ACDEL*	8704S
2620387	*ACDEL*	8705S
2620388	*ACDEL*	9569S
2620389	*ACDEL*	8835S
2620390	*ACDEL*	8871
2620391	*ACDEL*	8940S
2620392	*ACDEL*	8974S
2620393	*ACDEL*	9015S
2620394	*ACDEL*	9049N
2620396	*ACDEL*	9116S
2620397	*ACDEL*	9150S
2620398	*ACDEL*	9161
2620399	*ACDEL*	9178S
26204	*C-R*	**415458**!
2620400	*ACDEL*	9195S=
2620401	*ACDEL*	9342S
2620402	*ACDEL*	9363S
2620403	*ACDEL*	9406S
2620404	*ACDEL*	8705S
2620405	*ACDEL*	9568
2620406	*ACDEL*	9569S
2620407	*ACDEL*	9762S
2620408	*ACDEL*	8705S
2620409	*ACDEL*	9864S
2620410	*ACDEL*	9911S
2620411	*ACDEL*	9912
2620412	*ACDEL*	9913
2620465	*MERCM*	7840S
26205	*C-R*	**415458**!
2620513	*MERCM*	**254287**
2620530	*MERCM*	340787
26206	*C-R*	**415458**!
26207	*C-R*	**415458**!
26208	*C-R*	**415458**!
26208	*LAU*	**471267**!
262088	*ALLCH*	417650=
26208M	*DIA*	**415001**!
26209	*C-R*	**415458***
26209	*C-R*	**415458**!
2620948	*MERCM*	**471538**!
26211	*C-R*	**415458**!
262112	*C-R*	**472843**
262114	*C-R*	473437
262118	*C-R*	**470682**
262118	*GR-DV*	**470682**
262119	*C-R*	451469
262119	*CLARK*	451469
262120	*C-R*	**473232**
262120	*CLARK*	**473232**
262120M1	*C-R*	**473232**
262122	*C-R*	**473235**!
262123	*C-R*	**450068**
262123	*MINMA*	**450068**
262124	*C-R*	**472185**!
262124	*CLARK*	**472185**!
262124	*GR-DV*	**472185**!
262124K	*BENDI*	**471801**!
262124M1	*C-R*	**472185**!
262125	*C-R*	50266
262126	*C-R*	**472070**
262127	*C-R*	473451!
262128	*C-R*	**472439**
26213	*C-R*	**415458**!
262130	*C-R*	**472319**
26215	*C-R*	**415458**!
262153	*ACF*	**476838**!
26216	*C-R*	**415458**!
26216	*JNSON*	**455144**
2621642	*MERCM*	343185
2621670	*MERCM*	240119
26217	*JNSON*	J1119
2621740	*MERCM*	340787
2621757	*MERCM*	340815
2621970	*MERCM*	340724!
2622	*C-R*	**471424**!
26220	*C-R*	**415458***
26220008	*TROS*	205044
26220F	*DIA*	**473238**
26221	*C-R*	**415458**!
26223	*C-R*	**415458**!
26226402	*ALLCH*	**472324**!
26227	*C-R*	**415458**!
2622710A	*ACDEL*	5123
2622711A	*ACDEL*	**416125**
2622712A	*ACDEL*	5121
26229	*C-R*	**415458**!
2623001	*FMC*	**471647**
2623028	*FMC*	**472164**!
2623300	*MERCM*	**470954**
2623517	*MERCM*	**470954**!
26237	*C-R*	**415458**!
26238	*C-R*	**415458**!
26239	*C-R*	**415458**
26242	*C-R*	**415458**!
26243	*C-R*	**415458**!
26244	*C-R*	**415458**
26245	*C-R*	**415458**!
262499R91	*IH*	**416271**!
2624RC	*SUL*	**417211**!
2625431	*MERCM*	**471466**
26255	*C-R*	**415458**!
2625776	*MERCM*	**330385**
2625837	*MERCM*	**472475**
26260	*C-R*	**415458**!
262611	*WALKE*	**472397**!
2626209	*MERCM*	240731
2626226	*MERCM*	**471571**
26265	*C-R*	**415458**!
26266	*C-R*	**415458**!
2626782	*MERCM*	343185
26272	*C-R*	3813
26275	*C-R*	**417343**!
26276	*C-R*	**417343**!
2627OS	*JN-MN*	**417487**
26283	*C-R*	**417343**=
26283	*C-R*	**417343**
26283	*VICK*	**473231**!
26284	*C-R*	**417343**!
262843C91	*IH*	**451143**
26286	*C-R*	**417343**!*
2628643	*MERCM*	**472475**
2628HCR	*SPG*	2628!
2629	*CALSO*	204038
26292	*C-R*	**416654**
26293	*C-R*	**417343**!
26294	*C-R*	**417343**!
26297	*C-R*	**417343**!
26298	*C-R*	**417343**!
262997	*ALLCH*	**450621**
262A15204	*TROS*	5070
262A15604	*TROS*	6064
262A20005	*TROS*	8139
262W120	*C-R*	**473232**
262W120-M1	*C-R*	**473232**
262W124	*C-R*	**472185**!
262W124-M1	*C-R*	**472185**!
26302	*C-R*	**417343**!

! Industrial Size/Type * Minor Width Difference

= The U.S. customer service number is 877-4-TIMKEN. The Canadian customer service numbers are 800-565-4927 (English) and 800-565-0438 (French-Canadian).

Mfr. No.	Name	Zero Duplication or Recommended Industrial
26303	VICK	472185!
26305	C-R	417343!
26306	C-R	417343!
26310	C-R	200392
26310	HYST	415437
263122	C-R	473235!
263128	C-R	472439
26313	C-R	415007
26314	C-R	415007
263148	GMC	471750!
263148	ROSS	450048
2632	DURA	450593!
26324SA	TRSCM	451143
2632511	MERCM	471766!
26328	C-R	415007*
26328	C-R	417483
2632D	GOODM	418028
2632D	GOODM	455137!
26330	C-R	415007*
26331	C-R	415007*
26334TA	TRSCM	413248
263448	JEFF	450104
263463	GMC	472560N!
2634D	GOODM	476470
2634F	GOODM	476470
26351	WHITE	471820
26352	C-R	417082
26353	C-R	417082
26353TB	TRSCM	415483
26354	C-R	417082
263544TL	TRSCM	417079
26354SA	TRSCM	415483!
26356	C-R	417082
26358	C-R	712625
26359	C-R	5971
26360	C-R	5971
2636054	MERCM	471272!
26361	C-R	416278
26363PTB	TRSCM	415458
26363TB	TRSCM	415458
26364SA	TRSCM	415458
26364TA	TRSCM	415458
26368	C-R	418027!
2636D	GOODM	418028
2636D	GOODM	455137!
26373	C-R	9773
26373TA	TRSCM	417343!
26374TA	TRSCM	410708
26378	C-R	9773
2638105	MERCM	470625!
263821R91	IH	472439
2638D	GOODM	416865!
263922R91	IH	471413
26395	VICK	471466!
264-A4011	BENDI	415072
26402	US-EL	415449!
26409	US-EL	474264
2640D	GOODM	415023
2640OS	JN-MN	416404!*
26410	US-EL	417171!
26415	EATON	472015!
264179C91	IH	470530
264183	GMC	471224!
2641OS	JN-MN	415458!
2642OS	JN-MN	417621!
2643464	CHRYS	9342S
264356	ALLCH	471442!
264381	RCA	350156
264381	RCA	473096
264398	RCA	6863S!
2643R	SPG	2643N=
26444	HYST	412119!
26448-0114	GARLK	471553!
26448-0542	GARLK	471192
26448-0550	GARLK	470950!
26448-0550	GARLK	6241S
26448-0648	GARLK	470380!
26448-0837	GARLK	473234!
26448-1474	GARLK	471272!
26448-2120	GARLK	417344!
26448-6231	GARLK	473231!
26448-6252	GARLK	472164!
26448-6436	GARLK	476820
26448-6870	GARLK	455134!
26448-7033	GARLK	470954!
26448-7090	GARLK	471271!
26448-7256	GARLK	472446
26448-7295	GARLK	416127
26448-9508	GARLK	471466!
26448-9509	GARLK	471264!
26448-9994	GARLK	471689!
26449	TMTR	473232!
26449	VICK	417621!
26450	C-R	6846S=
26450	TMTR	471554!
264530R91	IH	471442!
264532R91	IH	471564
264533R91	IH	471766!
264534R91	IH	410708
26454	MALL	481537
26457PTB	TRSCM	9773
264589	HYST	417181!
26460	C-R	6592S=
264633R91	IH	412473!
264634R91	IH	473447
26467	LAU	471466!
264674R91	IH	473367!
264674R91	IH	473367
264693R91	IH	473447
264694R91	IH	473367!
264694R91	IH	473367
264695R91	IH	415379
264696R91	IH	417211!
264697R91	IH	412473!
264699R91	IH	415437
264700R91	IH	210914
264701R91	IH	415449!
264745R91	IH	210945
26480	C-R	6592S=
26490	LAU	470328
26490	LAU	481213!
264A-401	ROCKW	415072
26515	STAR	7186S
265283	GMC	474278!
26542D	IH	470950!
26542D	IH	6241S
2654799	MERCM	17760
26549M	DIA	470530!
2655F	IH	473213!
265659	HYST	JV1304
26570D	IH	415035!
26570D	IH	415035
2658111	MERCM	470390
265897	AUTOZ	TCS45961
265908	AUTOZ	BS40182
2659093	FMC	240736
2659093	PEERC	240736
2659757	CHRYS	417262!
2659993	FMC	470806
2659993	PEERC	470806
266124	C-R	470334!
2661738	FMC	450604
2661RC	SUL	471689!
2662	C-R	471870!
26620	C-R	7780
266218R91	IH	473405
26625	C-R	710234
2662818	MERCM	473230
2662LPD	JN-MN	416107!
2662OS	JN-MN	416107!
2662OS	JN-MN	455073
26630	C-R	68X85X8
26640	C-R	68X88X8!
26640	C-R	710446
26640	HYST	450143
26648	C-R	68X90X10!
2665	HWY	471571
2665	NATL	224820
26650	C-R	68X90X10
26650	C-R	68X90X7*
26651	C-R	68X90X10!*
26652	C-R	68X90X10V
26652	C-R	710440
26653	C-R	68X90X10V
26657	C-R	68X90X10V
2666	HWY	471571
26660	C-R	68X95X10
26660	C-R	68X95X8*
26661	C-R	226840
266638	CLIMX	417254
266674R91	IH	415449!
266675R91	IH	416288!
266676R91	IH	415034!
266677R91	IH	473245!
266698	ACF	473231!
26670	C-R	68X100X13
266726R91	IH	416163
266727R91	IH	417539!
266728	HYST	200912=
26673	C-R	68X100X10
266733R91	IH	210914
2667346	FMC	471192
2667346	PEERC	471192
266736R91	IH	470712!
266737R91	IH	476470!
266737R91	IH	476470
266784C91	IH	472311!
2667871	FMC	474255
2667874	FMC	450090
2667874	FORD	370047A
2667874	PEERC	450090
26683	C-R	68X100X13!
26695	C-R	710275
2669OS	JN-MN	415327*
2669S	SPG	2669
267022R91	IH	471733
267057	JEFF	473225!
267059	JEFF	417487
2671167	PEERC	471737=
2671168	FMC	472258!
2671168	PEERC	472258=
26730	C-R	6532S=
267371	HYST	473232!
2673838	MERCM	470328
2673838	MERCM	481213!
2674	NATL	370054A
26745	C-R	6532S=
26747	C-R	710091
26748	C-R	68X88X8!
26748	C-R	710334
26749	C-R	710334
26752	C-R	455434
267538	HYST	415447
267583	HYST	415447
26760	C-R	455151
26761	C-R	455151*
267616R91	IH	417355!
26763	C-R	410987!
26769C	DIA	473231!
26773	AMC	471570!
2677634	MERCM	471570!
267807	ALLCH	J1110=
26784	JNSON	473238!
26784C	DIA	410987!
267868	SPERY	340930
26790	EUROS	227550
26790	EUROS	75X100X12!
267981	GMC	470059
267981	GMC	470380!
26800	EUROS	229005
26800	EUROS	229006
268000	ACF	415027
268112	C-R	450776!
268114	C-R	471862
268120	C-R	481864
268121	C-R	450073
268122	ALLCH	200939*=
268122	C-R	474265
268122	GR-DV	474265
268122M1	BUTBN	474265
268122M1	C-R	474265
268123	C-R	50075=
268124	C-R	470334!
268124M1	C-R	470334!
268125	C-R	450269
268126	C-R	471866!
268128	C-R	471868
268130	C-R	473459!
268130	C-R	473459
268130M1	C-R	473459!
268130M1	C-R	473459
268131	C-R	450472!
2682	C-R	471870!
268419	GMC	471763
268440	GMC	472179
268465	GMC	450307
26850F	DIA	415988
268542	GMC	417316!
26860	C-R	455151
268630022	GA-WO	240119
268630058	GA-WO	340817
268630061	GA-WO	476838!
268630090	GA-WO	451857
268630190	GA-WO	473463
268630312	GA-WO	455655!
268630313	GA-WO	415458!
268630331	GA-WO	416664!
268630373	GA-WO	417349
268630400	GA-WO	417351!
268630481	GA-WO	415379
268630487	GA-WO	415437
268630507	GA-WO	416345!
268630509	GA-WO	415697!
268630509	GA-WO	455547
268630515	GA-WO	415035
268630515	GA-WO	415035!
268630595	GA-WO	415351!
268630621	GA-WO	415371
268630643	GA-WO	416154!
268630673	GA-WO	415725!
268630691	GA-WO	417541
268630742	GA-WO	415610
268630747	GA-WO	455576!
268630748	GA-WO	417362!
268630750	GA-WO	416666
268630815	GA-WO	415074
268630901	GA-WO	416395=
268630915	GA-WO	415551

! Industrial Size/Type * Minor Width Difference

= The U.S. customer service number is 877-4-TIMKEN. The Canadian customer service numbers are 800-565-4927 (English) and 800-565-0438 (French-Canadian).

Mfr. No.	Name	Zero Duplication or Recommended Industrial
268630948	GA-WO	417600
268630970	GA-WO	415128
268632072	GA-WO	J1127
268695	IH	473467!
268695R91	IH	473467!
268697R91	IH	470530!
268698R91	IH	415995!
268698R91	IH	415995!
268699R91	IH	412920!
268721	GMC	472179
26875	C-R	455151
26877	C-R	486857
2688	HWY	450033
268843	GMC	470590
26889	LAU	481443!
2689	HWY	471760
2689	NATL	2689S
26890	C-R	365008
268911	HYST	417541
26897C	DIA	6532S=
26898C	DIA	6532S=
26898R	DIA	415437
26898R	DIA	415437!
26899C	DIA	415060
26899C	DIA	455060
2689BX1	SPG	2689
268W116	C-R	470487=
268W116	C-R	470487
268W116M1	C-R	470487=
268W116M1	C-R	470487
268W122	C-R	474265
268W122-M1	C-R	474265
268W124	C-R	470334!
268W124-M1	C-R	470334!
268W130	C-R	473459
268W130-M1	C-R	473459
2690	HWY	476838!
269039	ACF	473214!
26904W	DIA	5957S
26905	C-R	455008
26920	C-R	455008
26921	C-R	455008
269220R91	IH	472924!
2693	HWY	470625!
2694038	MERCM	472324!
269462	ACF	410694!
26950	C-R	455008
26966F	DIA	470334!
26990K	IH	472636!
2699325	MERCM	471529
26996	BOSTN	476820
2699S	SPG	2699=
269GG130	C-R	473459
269GG130	C-R	473459!
26H7693	FORD	240698
26X1828	GARLK	455079!
26X37X7SC	TRSCM	26X37X7
26X37X7TC	TRSCM	26X37X7
26X38X5SC	TRSCM	26X38X5!
26X38X5TC	TRSCM	26X38X5!
26X40X7SC	TRSCM	26X40X7!
26X40X7TC	TRSCM	26X40X7!
26X40X8SB	TRSCM	471076
26X42X10	NATL	223606
26X42X10SC	TRSCM	26X42X10
26X42X10TC	TRSCM	26X42X10
26X42X7ASN(32)	ISP	26X42X7
26X47X7SC	TRSCM	26X47X7
26X47X7TC	TRSCM	26X47X7
26X48X7SC	TRSCM	26X48X7!
26X48X7TC	TRSCM	26X48X7!
26X52X8SC	TRSCM	26X52X8
26X52X8TC	TRSCM	26X52X8
27006	ALLCH	416339
27006	ALLCH	455031!
270065R91	IH	415379!
2701&1701	STEM	386025A
2701521	ALLCH	415458=
270178	KOHL	472572!
27023	FUNK	415960!
270380C91	IH	416921!
2704638	SPICE	471766!
2704S	SPG	2704=
27063-0213	GARLK	471267!
27063-6100	GARLK	471760
27063-6113	GARLK	1049
27063-6169	GARLK	471652
27063-7521	GARLK	6668S
27063-9502	GARLK	6863S!
27063-9509	GARLK	471264!
27063-9515	GARLK	471267!
27063-9528	GARLK	6668S
27063-9530	GARLK	472213
27074815	WHITE	370338A
27075348	WHITE	386025A
27076255	WHITE	370037A
27076255	WHITE	370338A
27076258	WHITE	386025A
27076259	WHITE	386025A
27076260	WHITE	370037A
27076260	WHITE	370349A
27076261	WHITE	370037A
27076261	WHITE	370349A
27076262	WHITE	370037A
27076262	WHITE	370349A
27076274	WHITE	370349A
270773	ALLCH	417316!
2708026	GMC	370181A
27089D	IH	415001!
27093H	IH	473463
270954	GMC	340413
2710101	EIMCO	473243
27109090	WHITE	386025A
27109091	WHITE	386025A
2711035	WOOL	471270!
271116	C-R	50345=
271131	C-R	450655=
27118	C-R	450341
271281	SPERY	473228
27130	JNSON	455566
27133	JNSON	J1122
271337R1	IH	415035
2715	WOODB	472193!
27150	MICH	473414
27150	UNIVE	473414*
271592	ALLCH	471141!
27159201	ALLCH	471141!
271597R91	IH	471442!
27162	MICH	473414
27162	UNIVE	473414
27178	BOSTN	471466!
271797R91	IH	450269
271799R91	IH	450269
27180	BOSTN	471224!
27182	BOSTN	470954!
27182	UNIVE	473415
271821C91	IH	417555!
27183	MICH	473415
27184	BOSTN	471264!
27186	BOSTN	471554!
27188	BOSTN	471652
27192	BOSTN	471766!
27193	JNSON	J1126
27193	US-EL	471764!
27194	BOSTN	476838!
27194	JNSON	415379
27194	JNSON	415379!
27196	BOSTN	6760S
27198	BOSTN	471192
27200	BOSTN	473233!
27204	BOSTN	450593!
2720401	EIMCO	472319
2720403	EIMCO	470487!
27208	BOSTN	471870!
27210	BOSTN	470334!
27210	C-R	310841
272112	C-R	450456!
272118	C-R	450803
272122	C-R	450765!
27214	BOSTN	471750!
27216	BOSTN	471255!
27218	BOSTN	471276
2722	C-R	474272
27220	BOSTN	471549!
27220	BOSTN	472467
27223-0215	GARLK	471570!
27223-0287	GARLK	471224!
27223-0359	GARLK	471763
27223-0760	GARLK	473231!
27223-4600	GARLK	474256
27223-5051	GARLK	471276
27223-6176	GARLK	473259
27223-6282	GARLK	476511=
27223-6329	GARLK	476519=
27223-6486	GARLK	476510=
27223-6557	GARLK	471379
27223-6639	GARLK	473197
27223-6738	GARLK	472239
27223-7033	GARLK	470954!
27223-7198	GARLK	472237=
27223-89	GARLK	471264!
27223-96	GARLK	471612
27225	C-R	710038
272257	ALLCH	471424!*
27230	C-R	417484
27233	BL-KN	473215!
272336	ALLCH	417349=
272354	BL-KN	471766!
2723OS	JN-MN	410308!
27244	BOSTN	471526!
27246	BOSTN	471570!
27248	BOSTN	450588!
27250	BOSTN	471649!
27250	C-R	480491
27251	C-R	480491
27252	BOSTN	471818
27254	BOSTN	471141!
27254	C-R	416664!
272545	SPERY	473227!
27256	BOSTN	470380!
27257	C-R	416664!
27258	C-R	416664!
27260	BOSTN	350364
27260	HYST	470712!
27262	BOSTN	330385!
27264	BOSTN	441130
27266	C-R	45827S
27268	C-R	416664!
27269	C-R	416664!
27270	C-R	416664!
27271	C-R	45827S
27276	C-R	416664!
27278	BOSTN	340827
27278	C-R	416664!
27279	C-R	416664!
272797R91	IH	450269
27280	C-R	416664!
27281	C-R	416664!*
27284	C-R	457291
27285	C-R	457291*
2728OS	JN-MN	471192
27291	C-R	417484!
27292	C-R	227040
27292	C-R	417484!
27293	C-R	417484*
27294	C-R	417484!
27295	C-R	417484!
27296	C-R	417484!
27297	C-R	417484!
27298	C-R	417484!
27299	C-R	417484!
272A451	BENDI	472826!
272W2	C-R	474272
27301	C-R	417484!
2730201	EIMCO	415995!
27303A	EIMCO	415035!
27303A	EIMCO	415035
2730402	EIMCO	411245!
27305	C-R	417484!
27307	KELSE	416339
27307	KELSE	455031!
273095R91	IH	415984!
27310	C-R	415984!*
273130	C-R	473241
27315	C-R	415984!*
27316	C-R	415984!*
27324	C-R	415984*=
27326	C-R	415984!*
27327	C-R	415984!*
2732M1	C-R	472492!
273301C91	IH	5403
273302C91	IH	5403
27331	C-R	5951
27332	C-R	415984!
27333	C-R	415984!
27334	C-R	415984!
27335	C-R	415984!
27336	CATER	470380!
27337	VICK	353120
27338	C-R	417316!
27339	KELSE	415035
27339	KELSE	415035!
27340	C-R	417316!
27343	C-R	417316!
27346	C-R	417316!
27346HA	IH	473464!
27346HA	IH	473464
27346HB	IH	473464!
27346HB	IH	473464
27348	C-R	417316!
27349	C-R	417316!
2734OS	JN-MN	415138!*
27352VB	TRSCM	45827S
273534SA	TRSCM	457291
27354	C-R	417316!
273544PTA	TRSCM	417484
27354SA	TRSCM	416664
273564R91	IH	415437
273565R91	IH	415458!
273566R91	IH	210945
273570R91	IH	470530!
273571R91	IH	473447
273572R91	IH	210914
273573R91	IH	473467!
273574R91	IH	415995!
273574R91	IH	415995!
273575R91	IH	415995!
273578R91	IH	470530!

! Industrial Size/Type * Minor Width Difference

= The U.S. customer service number is 877-4-TIMKEN. The Canadian customer service numbers are 800-565-4927 (English) and 800-565-0438 (French-Canadian).

Mfr. No.	Name	Zero Duplication or Recommended Industrial
273580R91	*IH*	**471570**!
273581R91	*IH*	**473367**
273581R91	*IH*	**473367**!
273582R91	*IH*	**417354**!
273584R91	*IH*	**417211**!
273585R91	*IH*	**417351**!
27359	*C-R*	**417316**!
2735OS	*JN-MN*	**415076***
27361	*C-R*	**417316**!
27362	*C-R*	**417316**!
27364	*C-R*	**417316**!
27365	*C-R*	**417316**
27366	*C-R*	**417316**
27366	*C-R*	**417316**=
27367	*C-R*	**417316**!
27368	*C-R*	**417316**!
27368	*C-R*	**417316***
27369	*C-R*	**417316**!
2736D	*GOODM*	**417191**
2736D	*GOODM*	455165!
27370	*C-R*	**417316**!
273701R91	*IH*	6863S!
27371	*C-R*	**417316**!
27372	*C-R*	**417316**!
27372VHY	*TRSCM*	46997S
27374SA	*TRSCM*	**417316**
27374TA	*TRSCM*	**417316**
27374TB	*TRSCM*	**417316**
27377	*C-R*	**417316**!
27379	*C-R*	**417316**!
27383TB	*TRSCM*	**415960**
27384	*C-R*	46997S*
27384SA	*TRSCM*	**415960**
27384TA	*TRSCM*	**415960**!
27384TB	*TRSCM*	**415960**
27385	*C-R*	**417316**!
273857C91	*IH*	**415379**!
27387	*C-R*	**417316**!
27388	*C-R*	**417316**!
27389	*C-R*	46997S
2738T2	*WHITE*	**417484**!
27394	*C-R*	46997S
27395SP	*TRSCM*	6643S
27397	*C-R*	**417316**!
273980R91	*IH*	**415449**!
273981R91	*IH*	**415034**!
273982R91	*IH*	**472179**
273985R91	*IH*	**473245**!
273986R91	*IH*	**416288**!
273987R91	*IH*	**473245**!
273988R91	*IH*	**416288**!
273989R91	*IH*	**415034**!
27399	*C-R*	**417316**!
27401	*C-R*	**417316**!
274014	*PEERC*	**473367**!
274014	*PEERC*	**473367**
27402B	*EIMCO*	**416865**!
27402VH	*TRSCM*	43086S
27404PTA	*TRSCM*	**416706**
2740601	*EIMCO*	**416364**!
2740D	*GOODM*	**415025**
27416	*C-R*	**417316**!
27417	*C-R*	**417316**!
274210A	*HARWA*	27X42X10
27424PTA	*TRSCM*	**416282**
27427	*WHITE*	**415449**!
27430	*C-R*	2222
27432-60B01	*SUZUK*	223535
274324	*VICK*	**350435**
27438	*C-R*	370352A
27438	*C-R*	5MR1009
27438	*C-R*	710395
27439	*C-R*	200942
2744	*CHEL*	**450326**
27440	*C-R*	**415960**!
27440	*C-R*	**415960**
27443	*C-R*	**415960**!
27444	*C-R*	**415960**!
27447	*C-R*	**415960**!
27448	*C-R*	**415960**!
274484R91	*IH*	**473228**!
27450	*C-R*	**415960**
27452	*C-R*	**415960**!
27452	*C-R*	4564V
27455	*C-R*	**415960**=
27455	*C-R*	**415960**
27456	*C-R*	**415960**
27458	*C-R*	**415960***
27461	*C-R*	4564V
274611	*SPICE*	**472394**
27463	*C-R*	**415960***
274631	*SPICE*	**472394**
274633	*SPICE*	**473225**!
274634	*SPICE*	**473243**
274635	*SPICE*	**416654**!
274638	*SPICE*	**471766**!
27466	*C-R*	**415960**
27467	*C-R*	**415960**
2746T2	*DIA*	**472636**!
2746T2	*WHITE*	**472636**!
27470	*C-R*	**415960**
27470	*HYST*	**415960**!
274706A	*HARWA*	27X47X10
27471	*C-R*	**415960**!
27471	*C-R*	**415960**
27471	*C-R*	4564V
274710A	*HARWA*	27X47X10
27472	*C-R*	**415960**!
27472	*C-R*	**415960**
27474	*C-R*	**415960**!
27475	*C-R*	**415960**
27475	*C-R*	**415960**!
27476	*C-R*	**415960**!
27477	*C-R*	**415960**
27479	*C-R*	**415960**
27479	*C-R*	**415960**!
27480	*C-R*	**415960**
27481	*C-R*	**415960**
27481	*C-R*	**415960**!
27483	*C-R*	**415960**
27492	*C-R*	**415960**
27492	*C-R*	**415960**!
274A2	*C-R*	**472572**!
274FF126-L	*C-R*	**473449**
274G123	*C-R*	5836
274G125	*C-R*	6781
274G2	*C-R*	5865
274H131	*C-R*	**450911N**!
274Z116	*C-R*	**473440**!
27501	*C-R*	**415960***
2750101	*EIMCO*	**472234**
275013	*SPG*	**415995**!
275013	*SPG*	**415995**!
27505	*C-R*	**415960**!
275067	*HYST*	**474272**
27510	*C-R*	**415960**
27511	*C-R*	**415960**!
275112	*C-R*	450463
275112M1	*C-R*	450463
275114	*C-R*	450808
275114M1	*C-R*	450808
275116	*C-R*	**473440**!
275116M1	*C-R*	**473440**!
275118	*C-R*	**473441**
27512	*HARN*	**472179**
275120	*C-R*	**474274**
275120M1	*C-R*	**474274**
275121	*C-R*	450284=
275121M1	*C-R*	450284=
275122	*C-R*	**473236**!
275122M1	*C-R*	**473236**!
275123	*C-R*	50191
275123M1	*C-R*	50191
275124	*C-R*	**472179**
275124	*CABOT*	**472179**
275124	*GOODM*	**473238**
275124	*GR-DV*	**472179**
275124	*HARN*	**472179**
275124M1	*C-R*	**472179**
275124T7	*C-R*	**472179**
275125	*C-R*	450285
275125M1	*C-R*	450285
275126	*C-R*	**473449**
275126	*FAIRB*	**473449**
275126M1	*C-R*	**473449**
275127	*C-R*	**473452**
275127M1	*C-R*	**473452**
275128	*C-R*	**472572**!
275128M1	*C-R*	**472572**!
27519	*CHAMP*	**415697**!
27525	*C-R*	55469
27526	*C-R*	476574N
27529	*C-R*	476574N
2752M1	*C-R*	**472492**!
27530	*C-R*	55469
27531	*HYST*	**471442**!
27537	*C-R*	**416706**!
27540	*C-R*	**416706**!
27541	*C-R*	**416706**!
27543	*C-R*	**416706**!
27544	*C-R*	**416706**=
27546	*C-R*	**416706**!
27547	*C-R*	**416706**!
27549	*C-R*	**416706**!
27550	*C-R*	**416706**!
27555	*C-R*	**416706***
27558	*C-R*	**417484**
27558	*C-R*	4874N
275597R91	*IH*	**473447**
27560	*C-R*	**416706**=
275604	*SPG*	**412473**!
27562	*C-R*	**416706**!
27565	*C-R*	**416706**
2756867	*MERCM*	17795
27576	*C-R*	487678N=
2757682	*GMC*	370019A
27577	*C-R*	476281
27578	*C-R*	486281N=
27580	*C-R*	**416282**
27583	*KELSE*	**415041**
275AW122-L	*C-R*	**473234**
275B	*WHITE*	6863S!
275B124	*C-R*	**472179**
275G120	*C-R*	40286
275G124	*C-R*	40183S!
275G2	*C-R*	40389S
275G23	*C-R*	41013S
275GL126	*C-R*	7600S
275H125	*C-R*	450285
275HD124	*C-R*	40183S!
275HD24	*C-R*	41013S
275HM120	*C-R*	40286
275N124	*C-R*	**472179**
275W114	*C-R*	450808
275W116	*C-R*	**473440**!
275W116-M1	*C-R*	**473440**!
275W118	*C-R*	**473441**
275W118-M1	*C-R*	**473441**
275W120	*C-R*	**474274**
275W120M1	*C-R*	**474274**
275W122	*C-R*	**473236**!
275W122-M1	*C-R*	**473236**!
275W124	*C-R*	**472179**
275W124-M1	*C-R*	**472179**
275W126	*C-R*	**473449**
275W126-M1	*C-R*	**473449**
275W128	*C-R*	**472572**!
275W128-M1	*C-R*	**472572**!
275W128-T8	*C-R*	**472572**!
275W2	*C-R*	**472492**!
275W2-M1	*C-R*	**472492**!
2760	*C-R*	7X16X7
27600	*C-R*	**416282***
27601	*C-R*	**416282**
27605	*C-R*	**416282***
2760600	*EIMCO*	**416364**!
276116	*C-R*	**474281**!
276116M1	*C-R*	**474281**!
276118	*C-R*	**450273**
2761182300	*SUZUK*	223542
2761182300	*SUZUK*	35X55X11!
276118M1	*C-R*	**450273**
276119	*C-R*	450274
276119	*GR-DV*	450274
276120	*C-R*	450275
276120M1	*C-R*	450275
276124	*C-R*	**473447**
276124M1	*C-R*	**473447**
276125	*C-R*	480281!
276126	*C-R*	480281!
276126M1	*C-R*	480281!
276128	*C-R*	**473179**
276128M1	*C-R*	**473179**
27613	*C-R*	**416282***
276130	*C-R*	**450279**
27614K	*IH*	**474274**
27615	*C-R*	**416282**
2762	*IH*	450089
276202R91	*IH*	**415995**!
276202R91	*IH*	**415995**!
276207R91	*IH*	**417211**!
27621	*C-R*	55238
27625	*C-R*	416961=
27630	*C-R*	6643S
276323	*HYST*	**472924**!
276397C91	*IH*	**415035**
27641	*LAU*	340771
27642	*C-R*	3591
2765	*C-R*	7X16X7V
276603	*HYST*	**417366**!
2767	*FWD*	**472179**
27676	*LAU*	7014S
2768012	*CHRYS*	6840S
2768017	*CHRYS*	6960
276983	*HYST*	413479
276985	*HYST*	**473212**!
276G124	*C-R*	**472179**
276W116	*C-R*	**474281**!
276W116-M1	*C-R*	**474281**!
276W118	*C-R*	**450273**
276W118-M1	*C-R*	**450273**
276W120	*C-R*	450275
276W120-M1	*C-R*	450275
276W124	*C-R*	**473447**
276W124-M1	*C-R*	**473447**
276W126	*C-R*	480281!
276W128	*C-R*	**473179**
276W128-M1	*C-R*	**473179**

! Industrial Size/Type * Minor Width Difference

= The U.S. customer service number is 877-4-TIMKEN. The Canadian customer service numbers are 800-565-4927 (English) and 800-565-0438 (French-Canadian).

Mfr. No.	Name	Zero Duplication or Recommended Industrial
276W128-T8	C-R	**473179**
276W130	C-R	**450279**
276YM128	C-R	**473179**
276YM128-L	C-R	**473179**
277065	KOHL	**473234**!
27710	C-R	70X85X8
27714	C-R	70X85X8!
277181R91	IH	441130
277219C91	IH	**416364**!
27723	C-R	1021V
27725	C-R	227020*
27725	C-R	70X88X8!
27726	C-R	70X88X9V
27727	C-R	70X88X12
277371	NEHO	5071
277383R91	IH	**471255**!
27739	C-R	70X90X10!
27740	C-R	227040
27740	C-R	70X90X10!*
27740	C-R	70X90X7*
27741	C-R	70X90X10!
27743	C-R	227040
27743	C-R	70X90X10V!
277433	BUC-E	415871
27746	C-R	70X90X10!
27746	FMC	**471766**!
27748	C-R	70X92X12
27749	C-R	227045
27750	C-R	70X92X12!
27752	FMC	**476838**!
27755	C-R	70X95X10!
27755	C-R	70X95X13!*
27757	C-R	70X95X10V
27759	C-R	70X95X10
27768	C-R	70X100X10
27770	C-R	70X100X13
277724R91	IH	**473228**
277727R91	IH	**450593**!
277728R91	IH	**470334**!
277729R91	IH	**471785**!
27773	C-R	70X100X10V
277730R91	IH	**415938**
277730R92	IH	**415938**=
27775	C-R	70X100X13!
27783	C-R	70X105X13
27783	C-R	70X105X7*
27785	C-R	70X105X10!
27785	C-R	70X105X13!*
27785	C-R	70X105X7*
27790	C-R	70X110X10!
27791	C-R	70X110X10!*
27792	C-R	70X110X10!*
277FF124	C-R	200354*
277FF23	C-R	6590S
277G124	C-R	203002
277GR124	C-R	204002*
277GR23	C-R	6590S
277HDR124	C-R	204002*
277HMS24-T8	C-R	5589$
277HMS24-T8-L	C-R	5589
2780	C-R	7X22X7
27802	BOSTN	476816=
27802	HYST	**412871**!
278052R91	IH	**415379**!
278058R91	IH	**474265**
278059R91	IH	**471684**!
278060R91	IH	**411253**!
278061R91	IH	**411253**!
278123	C-R	**470334**!
278123	C-R	50289
278124	C-R	**470334**!
278124	C-R	50289
278127	C-R	**414045**!
278128	C-R	**414045**!
278128M1	C-R	**414045**!
2781F	IH	**455008**
27841-63B00	SUZUK	**1213N**
27842-63B00	SUZUK	710286
27850	C-R	**417316**!
2785001	BR-WN	J1122
27852A	IH	**473446**
27853	KELSE	40566S
27860	C-R	**475384**
278616_C92	IH	370030A
27875	MALL	**471649**!
27876	LAU	**471539**!
278773	ACF	**470530**!
27887B	HYST	6127
27897	LAU	**471224**!
278K1	WHITE	**474278**!
278W124	C-R	**470334**!
278W124	C-R	50289
278W128	C-R	**414045**!
27925	HYST	**473463**
279343C91	IH	**415449**!
27947	CHAMP	**415483**
279491R91	IH	**415379**=
279492R91	IH	**415379**=
279493R91	IH	**415995**!
279493R92	IH	**415995**!
279494R91	IH	**415995**!
279495R91	IH	**415449**=
279496R91	IH	**415449**=
2794RC	SUL	**470334**!
279522	HYST	**470682**
2796RX	SPG	2796
2796SS0	SPG	2796
279731R91	IH	**471255**!
279750R91	IH	**417344**
279751R91	IH	**412473**!
279751R92	IH	**412473**!
279752R91	IH	**412473**!
279754R91	IH	**473467**=
279755R91	IH	**412473**!
27990R91	IH	455040N=
279987R91	IH	**415437**!
279988R91	IH	**415458**=
279989R92	IH	455685N=
279990R91	IH	455040N=
27AF1	BR-WN	**470954**!
27KH113	MACK	**417350**=
27KH114	MACK	**417484**!
27KH116	MACK	5578
27R-549	HOLLE	954014T
27UV-0625	WHITE	**471141**!
27X37X7SC	TRSCM	27X37X7
27X37X7TC	TRSCM	27X37X7
27X42X10	SIMRT	27X42X10
27X42X10SC	TRSCM	27X42X10
27X42X10TC	TRSCM	27X42X10
27X42X7A	ISP	27X42X7
27X43X8SC	TRSCM	27X43X8!
27X43X8TC	TRSCM	27X43X8!
27X45X8SC	TRSCM	27X45X8!
27X45X8TC	TRSCM	27X45X8!
27X47X10	FORSH	27X47X10
27X47X10	SIMRT	27X47X10
27X47X10SC	TRSCM	27X47X10
27X47X10TC	TRSCM	27X47X10
27X47X7	SIMRT	27X47X10
27X47X8	FORSH	27X47X10
27X47X8	NATL	27X47X10
27X47X8	SIMRT	27X47X10
27X52X8A	ISP	27X52X8
28-P-197	SPICE	**473010**
28-P-211	DANA	**470530**=
28-P-213	SPICE	481833V
28-P-225	DANA	**472258**=
28-P-228	SPICE	470442V!
28-P-230	SPICE	**472070**
28-P-236	SPICE	**470774**
28-P-261	SPICE	**472015**
28-P52	SPICE	**471766**!
28-P56	SPICE	**471529**
28-P60	SPICE	**450326**
2800-14669STLPD	JN-MN	509503=
2800-6841STLPD	JN-MN	509503=
280018	BRCWY	50075=
28001H	IH	**416654**
28001HA	IH	**416654**
28002669	GM	4614N
28002670	GM	4614N
2800OS	JN-MN	**471272**!
2801-32165	GARLK	**473204**
280122L	C-R	**473235**
2801692	CHRYS	9376
2801733	CHRYS	9487
2801733	DOMGA	9487
28032	FUNK	**472179**
28033	FUNK	**415449**!
28035	C-R	**455005***
28040	C-R	**455005**
28041	C-R	**455005**
280423	HYST	**473230**!
2805OS	JN-MN	**472924**!
280661	ACF	6644
280689	ACF	**473214**!
2806OS	JN-MN	**473225**!
2807OS	JN-MN	**417605***
2808267	CHRYS	6840S
2808268	CHRYS	6960
2808269	CHRYS	8121S
280886C91	IH	**415958**!
280886C91	IH	**415958**
28100	C-R	**455005**
28101	TROS	**471316**
28106AS	HERCU	**470712**
2811035	C-W	**416239**!
2811035	WOOL	**416239**!
281139	ACF	**471570**!
28116	C-R	**417485**
2811RC	SUL	**473405**
28120	C-R	**417485**
28124D	IH	**415027**
28124D	IH	**415027**!
28127D	IH	**415043**
28137	MICH	**471267**!
281374TL	TRSCM	**455005**
28140	C-R	**417485**
281404SA	TRSCM	**475384**
28141	C-R	**417485**
28143	DURA	417267
28150	MICH	**471570**!
28150	UNIVE	**471570**!*
28153D	IH	**416288**!
2815OS	JN-MN	**471567**!*
28160	C-R	**417485***
28162	MICH	**471646**!
28162	UNIVE	**471646**!
28175	C-R	**475384***
28175	MICH	**470590**
28175	UNIVE	**470590**
28180	C-R	**475384**
28181	C-R	**475384**
28182	UNIVE	**471137**
28183	MICH	**471137**
28187	MICH	**471730**
281W450	CONE	5399
281Y1-L	C-R	6855N=
28200	UNIVE	470645
2820BT	SPG	2820=
282131C1+300845C91	IH	5066
28220	C-R	**475384***
28220	TROS	**416738**!
28220	TROS	450096
28238	HYST	**471649**!
28246	SPERY	**471192**
28246	VICK	**471192**
2825713	CHRYS	340413
28260	C-R	**411348**!
282609	ALLCH	**473424**!
2826106	CHRYS	**482163**!
2826106	DOMGA	**482163**!
282631	VICK	**471504**=
2826362	CHRYS	**416654**
28265	AMC	**473228**
28266D	IH	**412119**!
2826BT	SPG	2826
28270	C-R	**411348**!
28275	C-R	**411348**!
28276	C-R	**411348**!*
28288	VICK	**418028**
28288	VICK	455137!
2829960	CHRYS	456744N
282W18	C-R	**470806**
282W18-M1	C-R	**470806**
28308	C-R	227235
28310	C-R	1986
28312	C-R	1986
28325	C-R	474230
28325	C-R	72X90X10
28328	CHAMP	**471466**
2832BH	SPG	5121
28330	C-R	72X90X10!
28332	C-R	710075
283333R91	IH	**471765**!
28340	C-R	72X95X10
283403R91	IH	**470954**!
28341	C-R	72X95X10!
283442C91	IH	**417530**
2834BG1	SPG	4148
2834BG1	SPG	**471424**
2834OS	JN-MN	55611*=
28354	C-R	72X100X10
28355	C-R	72X100X12
28358	C-R	72X100X12!
28363TB	TRSCM	**415303**!
2836D	GOODM	**415991**
2836D	GOODM	455146!
28370	C-R	72X105X10
2837D	GOODM	**417196**!
283842-C91	IH	370007A
28384SP	TRSCM	9864S
28384TA	TRSCM	**417158**
28385	C-R	72X110X10
2839213	WHITE	**450639**
28394	EATON	5MR1009
2839D5	DIA	**417484**!
2839D5	WHITE	**417484**!
283G23	C-R	40627S=
2840101	EIMCO	**471887**
2840202	EIMCO	**412040**
28404TA	TRSCM	**416921**
284098	ACF	**473231**!
2840D	GOODM	417537
2840OS	JN-MN	**473439**!*
2841	FORD	5727
284112	C-R	**473197**

! Industrial Size/Type * Minor Width Difference $ F-M Number Is Part Of A Kit
= The U.S. customer service number is 877-4-TIMKEN. The Canadian customer service numbers are 800-565-4927 (English) and 800-565-0438 (French-Canadian).

Mfr. No.	Name	Zero Duplication or Recommended Industrial
284112M1	C-R	473197
284120	C-R	450819
284122	C-R	470596*
28413TA	TRSCM	417134
28418	C-R	470806*
28420D	IH	415072
28420DA	IH	415072
28422	C-R	5877
28422M1	C-R	5877
28422Q6	C-R	5877
28424	C-R	450639
28425	C-R	2081
28426	C-R	2081
284395TA	TRSCM	2081
28454	EATON	6532S=
28454SA	TRSCM	455144
28460	LAU	471649!
2846582	CHRYS	473423
2847149	CHRYS	472843
28474	C-R	456837V
285	C-R	39805
285	C-R	5106
28503A	EIMCO	412040
285128	C-R	473238
28517	SPERY	471224!
28517	VICK	471224
2852574	CHRYS	473228!
2852948	CHRYS	8660S
285310-C91	IH	370001A
285311-C91	IH	370007A
28531A	HEIL	470712!
28531A	HERCU	470712!
285333	ACF	415995!
285511YY	Y-T	473010
2855BJ	SPG	2855
2859981	VICK	240435
2859984	LAVOI	240716
2859984	VICK	240716
285H24	C-R	470898
2860	CALSO	410524
286116	C-R	450523
286124	C-R	471141!
286124M1	C-R	471141!
286130	C-R	472144!
28617	OLIVE	416288!
28624	C-R	470898
28624M1	C-R	470898
28625	ROTO	471801!
286326R92	IH	415938=
286349R91	IH	415234!
286362R91	IH	415938
286362R92	IH	415938
286363R91	IH	415938
286367R91	GWI	415871
286367R91	IH	415871
286367R92	IH	415871
28646	C-R	4122
28646	C-R	470547
286490R91	GWI	50254=
286490R91	IH	50254=
28650	C-R	415303!*
28651	C-R	415303!*
286512R91	GWI	472157!
286512R91	GWI	472157
286512R92	IH	472157=
28652	C-R	415303!
28653	C-R	415303!
28654	C-R	415303!
28655	C-R	415303!
28656	C-R	415303!
28657	DURA	6703S
28658	DURA	471224!
28658	ROTO	471224!
28660	C-R	417344!
28663	C-R	417344!*
28668	C-R	417344!
28669	C-R	417344!
2866D5	WHITE	474278!
28670	C-R	417344=
28671	C-R	417344!
28672	C-R	417344!
286736	ACF	471272!
28674	C-R	417344!
28676	C-R	417344!*
28678	C-R	417344!*
28680	C-R	417344!*
28682	C-R	417344!
28683	C-R	417344!
28686	C-R	417344!
28687	C-R	417344!*
28688	C-R	417344!*
28689	C-R	417344!
28690	C-R	417344!
28691	C-R	417344!
28693	C-R	417344!
28694	C-R	417344!*
28697	C-R	417344*
286A2	C-R	472924!*
286AM2	C-R	472924!*
286AMM124	C-R	471141!
286AMM2	C-R	472924!*
286B124	C-R	471141!*
286B2	C-R	472924!*
286B24	C-R	470898
286BM2	C-R	472924!*
286C2	C-R	472924*
286F2	C-R	472924!*
286FF24	C-R	470898
286FM24	C-R	470898*
286N24	C-R	470898
286W124	C-R	471141!
286W124-M1	C-R	471141!
287	C-R	5163
28700	C-R	417344*
28700	C-R	417344!*
28701	OLIVE	473228
28704	C-R	417344!
287047R91	IH	455107N=
28708	C-R	417344!
28709	C-R	417344!
287118	C-R	473442!*
287120	C-R	473444
287120	FAIRB	473444
287120M1	C-R	473444
287122	C-R	473446*
287122	FORD	473446
287122M1	C-R	473446*
287123	C-R	50081*
287123M1	C-R	50081
287124	ALLCH	471141!
287124	C-R	471141!
287124M1	C-R	471141!
287126	C-R	473450
287126M1	C-R	473450
287127	C-R	473453*
287128	C-R	473238
287128K	FORD	473238
287128M1	C-R	473238
287129	BENDI	473238
287130	C-R	472144!*
287130	GWI	472144!
287130K	IH	472144!
287130M1	C-R	472144!*
287131	C-R	450474*
287131M1	C-R	450474*
28714	C-R	450430*
2872	C-R	472924!
2872	GR-DV	472924!
2872	GWI	472924!
28720	C-R	417158!
28720	C-R	9864S
287201R91	IH	473367
287201R91	IH	473367!
28722	C-R	451948*
28722M1	C-R	451948*
28724	C-R	470898
28724M1	C-R	470898
28726	C-R	473244
28726M1	C-R	473244
2872M1	C-R	472924!
2872OS	JN-MN	416865!
28731	C-R	417158!
28737	C-R	417158!
28738	C-R	417158!
28739K	IH	473466
28741	C-R	417158!
28742	C-R	417158!
287442R91	IH	473367!
287442R91	IH	473367
28745	C-R	417158!
28746	C-R	417158!
287465	SPERY	40526S
28749	C-R	417158!
28750	C-R	417158!
28751	C-R	417158*
28755	C-R	417158!
28756	C-R	417158!
28758	C-R	370150A
28760	C-R	416921!
28761	C-R	416921!
28763	C-R	416921!
28764	C-R	416921!
28765	AMC	473228
287666	ACF	471766!
2876S	SPG	2876
28770	C-R	416921!
28771	C-R	416921!
28775	C-R	416921!*
287756C91	IH	5471
28777	C-R	416921!
28778	C-R	416921!
28780	C-R	416921!*
28781	C-R	416921!*
28790	C-R	416921*
28790	C-R	416921*
28794	C-R	416921!
28795	C-R	416921!
287952	GWI	471466!
28796	C-R	43086S
28798	C-R	416921!
28799	C-R	416921!*
2879RX	OSHKO	473179
287CMM2	C-R	472924
287F118	C-R	473442!*
287FF22	C-R	451948*
287FF24	C-R	40566S*
287FF24-L	C-R	40566S*
287G24	C-R	40566S
287G25	C-R	40566S
287HA119-L	C-R	7456N
287HM24	C-R	40566S*
287HMS24-Y30	C-R	470898!
287LM2	C-R	472924
287TL124	C-R	471141
287W118	C-R	473442!*
287W118-M1	C-R	473442!*
287W120	C-R	473444
287W120-M1	C-R	473444
287W122	C-R	473446*
287W122-M1	C-R	473446*
287W124	C-R	471141!
287W126	C-R	473450
287W126-M1	C-R	473450
287W128	C-R	473238
287W128-M1	C-R	473238
287W130	C-R	472144!*
287W130-M1	C-R	472144!*
287W2	C-R	472924!
287W2-M1	C-R	472924!
287W22	C-R	451948*
287W22-M1	C-R	451948*
287W24	C-R	470898
287W24-M1	C-R	470898
287W26	C-R	473244
287WL130	C-R	472144!*
287WL2	C-R	472924!
287Y2	C-R	472924!*
287YR2	C-R	472924!
28800	C-R	43086S
28804	C-R	416921!
28805	C-R	416921!
2881041	CHRYS	473235
2881185	CHRYS	8695S
28817	C-R	417134
28820	C-R	417134
28823	C-R	417134
28828	C-R	417134
28830	C-R	2674
28831	C-R	417134*
28832	C-R	370054A
28836	C-R	455310
2883OS	JN-MN	417564*
28841	C-R	416426N*=
28844	C-R	455556
28848	C-R	455144*
28849	C-R	455144
28849	JOHND	472397!
28853	C-R	455144*
28873	C-R	5403
288864R91	IH	472924!
288864R92	IH	472924!
288864R93	IH	472924!
288G126	C-R	473450!
288GL24	C-R	6626S
289030R91	IH	50254=
289031750	GARLK	710067
289067	BUC-E	415938
289082R92	IH	455107N=
289082R94	IH	455107N=
289082R95	IH	455107H=
289083R91	IH	415871
289083R92	IH	415871
289083R94	IH	415871
289084R91	IH	415234!
28908H	IH	5MR71
289128	C-R	473238
289198	SPERY	470380!
289290	SPERY	481163!
2893M	DIA	415991
2893M	DIA	415991!
289503R91	IH	415021
289660	ROCKW	J1120=
289796	HYST	J1136
2899531	CHRYS	3095
2899532	CHRYS	3103!
289HMA24	C-R	470898!
289HMS24	C-R	470898!
28AC203	CONTI	470530!

! Industrial Size/Type * Minor Width Difference

= The U.S. customer service number is 877-4-TIMKEN. The Canadian customer service numbers are 800-565-4927 (English) and 800-565-0438 (French-Canadian).

Mfr. No.	Name	Zero Duplication or Recommended Industrial
28AK211	CONTI	**476838**!
28P-15	SPICE	**411394**!
28P-18	SPICE	6847S
28P-19	SPICE	**471267**!
28P-19-3	SPICE	**471267**!
28P-21	SPICE	**471538**!
28P-4	SPICE	**471553**!
28P101	SPICE	**472258**!
28P1011	SPICE	**472258**!
28P125	SPICE	**471224**!
28P180	SPICE	**416624**=
28P209	DANA	**471538**
28P215	DANA	**471466**
28P219	DANA	**473010**
28P220	DANA	450496V
28P222	DANA	**417484**
28P223	DANA	**416654**!
28P227	DANA	470553V
28P229	DANA	471291V
28P231	DANA	471835V
28P232	DANA	471538V
28P233	DANA	**471763**
28P236	DANA	**470774**
28P237	DANA	415983V
28P3	SPICE	**471787**!
28P37	SPICE	**472164**!
28P371	SPICE	**472164**!
28P372	SPICE	**472164**!
28P40	SPICE	**473228**!
28P51	SPICE	**471466**!
28P57	SPICE	**471231**!
28P67	SPICE	**471341**!
28P69	SPICE	**410496**!
28P72	SPICE	**415001**!
28P75	DANA	**417484**
28P76	SPICE	**416654**!
28P85	SPICE	**471760**
28P86	SPICE	**473229**
28X38X7SC	TRSCM	28X38X7
28X38X7TC	TRSCM	28X38X7
28X40X7SC	TRSCM	28X40X7
28X40X7TC	TRSCM	28X40X7
28X42X8SC	TRSCM	28X42X8!
28X42X8TC	TRSCM	28X42X8!
28X44X6SC	TRSCM	28X44X6!
28X44X6TC	TRSCM	28X44X6!
28X45X8SC	TRSCM	28X45X8
28X45X8TC	TRSCM	28X45X8
28X47X7	NATL	28X47X7!
28X47X7SC	TRSCM	28X47X7!
28X47X7TC	TRSCM	28X47X7!
28X47X8	NATL	28X47X7!
28X48X8SC	TRSCM	28X48X8
28X48X8TC	TRSCM	28X48X8
28X52X7SC	TRSCM	28X52X7
28X52X7TC	TRSCM	28X52X7
28X71	AIRCO	**471103**!
28X716	AIRCO	**471766**!
28X717	AIRCO	**417316**!
28X718	AIRCO	**417171**!
28X719	AIRCO	**470530**!
28X72	AIRCO	**471554**!
28X721	AIRCO	**455005**
28X724	AIRCO	**471553**!
28X725	AIRCO	**415449**!
28X726	AIRCO	**417343**!
28X728	AIRCO	**471763**
28X729	AIRCO	**471570**!
28X73	AIRCO	**473205**
28X730	AIRCO	**470712**!
28X731	AIRCO	417490
28X733	AIRCO	**471267**!
28X739	AIRCO	**417344**!
28X74	AIRCO	**473467**!
28X740	AIRCO	**471705**!
28X75	AIRCO	**472636**!
28X751	AIRCO	**471652**
28X76	AIRCO	**417316**!
28X79	AIRCO	**412871**!
29	UNIVE	**471103**!
290-193	ACDEL	**471271**
290-228	ACDEL	3357
290-257	ACDEL	4739
290-257	NDEP	4739
290-258	ACDEL	710103
290-259	ACDEL	710106
290-261	ACDEL	4175
290-262	ACDEL	5682
290-263	ACDEL	4795V
290-268	ACDEL	4740
290-269	ACDEL	4739
290-70	ACDEL	7934S
290-81	ACDEL	8974S
290-82	ACDEL	8975S
290-83	ACDEL	8976S
290-89	ACDEL	9406S
2900	GM	2900
2900SET	GM	2900
2901	ACDEL	**471192**
29010	ACDEL	1196
29010	TRANS	**417495**=
290100	ACDEL	45013S
290102	ACDEL	**473473**
290103	ACDEL	**411348**
290104	ACDEL	**417485**
290105	ACDEL	**417353**
290106	ACDEL	55692=
290107	ACDEL	200600
290108	ACDEL	80313
290109	ACDEL	200640
29011	ACDEL	1198
290110	ACDEL	200855
290111	ACDEL	203006
290112	ACDEL	205004
290113	ACDEL	205044
290115	ACDEL	291295
290116	ACDEL	292594
290117	ACDEL	**418028**
290118	ACDEL	331301N
290119	ACDEL	340210
29012	ACDEL	1217
290120	ACDEL	4148
290121	ACDEL	203006
290122	ACDEL	442380
290123	ACDEL	450033
290124	ACDEL	**480630**
290125	ACDEL	**410496**
290126	ACDEL	**417509**
290127	ACDEL	**416664**
290128	ACDEL	**416273**
290129	ACDEL	**416130**
29013	ACDEL	2207
290130	ACDEL	**417507**
290131	ACDEL	**415991**
290132	ACDEL	4148
290133	ACDEL	493291
290134	ACDEL	3087
290135	ACDEL	5131
290136	ACDEL	**470380**
290138	ACDEL	40769S
29014	ACDEL	2222
290140	ACDEL	5MR71
290147	ACDEL	5M356
29015	ACDEL	4250
290150	ACDEL	5M403
290158	ACDEL	5M544
29016	ACDEL	3210
290162	ACDEL	5MR1008
290163	ACDEL	5MR1009
290167	ACDEL	205017
290169	ACDEL	1035=
29017	ACDEL	5109
290175	ACDEL	2551
290176	ACDEL	1077=
29018	ACDEL	5121
290180	ACDEL	1012N
290181	ACDEL	1209
290182	ACDEL	**1213N**
290184	ACDEL	5119
290188	ACDEL	40389S
29019	ACDEL	5123
290190	ACDEL	43290S
290191	ACDEL	352637
290192	ACDEL	442874
290194	ACDEL	**472394**
290195	ACDEL	**416273**
290196	ACDEL	**472213**
290197	ACDEL	482126
290199	ACDEL	5246
2902	ACDEL	224045
29020	ACDEL	4148
290200	ACDEL	**472016**
290201	ACDEL	**455151**
290202	ACDEL	6312
290204	ACDEL	41075S
290205	ACDEL	46997S
290206	ACDEL	45031S
290208	ACDEL	55155=
29021	ACDEL	5756
290211	ACDEL	200763
290212	ACDEL	**415082**
290213	ACDEL	**415876**
290214	ACDEL	**417020**
290215	ACDEL	**417205**
290216	ACDEL	**417514**
290217	ACDEL	5MR71
290220	ACDEL	**417506**
290221	ACDEL	**417353**
290222	ACDEL	416102
290223	ACDEL	**417509**
290224	ACDEL	417359
290225	ACDEL	**416273**
290226	ACDEL	**471192**
290227	ACDEL	**417485**
29023	ACDEL	**473450**
29024	ACDEL	**472179**
29025	ACDEL	5836
29026	ACDEL	5924
29029	ACDEL	6064
2903	ACDEL	1070=
29030	ACDEL	**413478**
29031	ACDEL	353141
29031	KELSE	**473239**!
29033	ACDEL	3210
29034	ACDEL	6336S
29035	ACDEL	6356
29035	TRANS	**410308**!
290359	SPG	**473448**
290381	SPG	**471652**
29039	ACDEL	6489
2904	ACDEL	1165
29042	ACDEL	6547
29044	ACDEL	6626S
29045	ACDEL	6638S
29045	VICK	**416664**!
29047	ACDEL	**417134**
29048	ACDEL	6781
29049	ACDEL	6785
2905	ACDEL	1174
29050	ACDEL	6815
29051	ACDEL	6840S
29054	ACDEL	44052
29055	ACDEL	6954S
29056	ACDEL	44053
29057	ACDEL	6960
29057	TRANS	**471271**!
29058	ACDEL	6985
29058	HYST	**473464**
290587	SPG	**453279**!
29059	ACDEL	**473317**
2906	ACDEL	1183
29060	ACDEL	7107A=
29062	ACDEL	7381S
29063	ACDEL	7537S
29064	ACDEL	7600S
29065	ACDEL	7607
290653R91	IH	**471689**!
29066	ACDEL	5113
29066	ACDEL	7721
29066	KELSE	6222
29067	ACDEL	7780
29068	ACDEL	**472164**
29069	ACDEL	7866S
2907	ACDEL	1188
29071	ACDEL	7994S
29072	ACDEL	8121S
29073	ACDEL	8139
29074	ACDEL	8243
29075	ACDEL	8430S
29076	ACDEL	6960
29076	WHITE	**470530**!
290768R91	IH	**415960**
29077	ACDEL	8521S
29078	ACDEL	370047A
290787R91	IH	**473467**
29079	ACDEL	8705S
2908	ACDEL	1192
29080	ACDEL	8871
290811R91	IH	**416921**!
29085	ACDEL	9015S
29087	ACDEL	9150S
29088	ACDEL	9339S
2909	ACDEL	1195
29090	ACDEL	8705S
29091	ACDEL	9762S
29092	ACDEL	8705S
29093	ACDEL	**471413**
290932	BR-ST	470328
290932	BR-ST	**481213**!
29094	ACDEL	40566S
29095	ACDEL	40576S
29096	ACDEL	40769S
29097	ACDEL	40973S
29098	ACDEL	41257
29099	ACDEL	42101S
290WL130-M1	C-R	9150S
291-100	ACDEL	8660S
291-106	ACDEL	8835S
291-113	ACDEL	9178S
291-12	ACDEL	2081
291-13	ACDEL	2146
291-16	ACDEL	5113
291-275	ACDEL	3348
291-300	ACDEL	370005A
291-301	ACDEL	4795V
291-302	ACDEL	**417505**
291-303	ACDEL	370120A
291-31	ACDEL	5453

! Industrial Size/Type
= The U.S. customer service number is 877-4-TIMKEN. The Canadian customer service numbers are 800-565-4927 (English) and 800-565-0438 (French-Canadian).

Mfr. No.	Name	Zero Duplication or Recommended Industrial
291005R91	*IH*	**416891**!
291010R91	*IH*	**476470**
291010R91	*IH*	**476470**!
29105	*C-R*	227409
2910BJ	*SPG*	2910
2911	*ACDEL*	1012N
29110	*ACDEL*	1955
291101	*ACDEL*	8676S
291102	*ACDEL*	8695S
291102C91	*IH*	**473228**
291103	*ACDEL*	8704S
2911035	*WOOL*	**455297**
291103C91	*IH*	**473228**
291104	*ACDEL*	8724S
291104C91	*IH*	442380
291105	*ACDEL*	9569S
291105C91	*IH*	442380
291107	*ACDEL*	8940S
291108	*ACDEL*	9049
291108	*ACDEL*	9049N
291108	*BR-ST*	50490=
291109	*ACDEL*	370086A
29111	*ACDEL*	2055
291110	*ACDEL*	9116S
291111	*ACDEL*	9128S
291112	*ACDEL*	9161
291115	*ACDEL*	9342S
291116	*ACDEL*	9344S
291117	*ACDEL*	9363S
291118	*ACDEL*	9568
291119	*ACDEL*	9569S
29112	*C-R*	227410
291120	*ACDEL*	9584
291121	*ACDEL*	9864S
291123	*ACDEL*	9912
291124	*ACDEL*	9913
291126	*ACDEL*	40316S
291127	*ACDEL*	40369S
291128	*ACDEL*	42763
291129	*ACDEL*	50631
291130	*ACDEL*	**470764**
291131	*ACDEL*	**410987**
291132	*ACDEL*	**473228**
291133	*ACDEL*	**410825**
291135	*ACDEL*	51322
291136	*ACDEL*	**484058**
291137	*ACDEL*	**455249**
291138	*ACDEL*	456618
291139	*ACDEL*	**416297**
291139R91	*IH*	**415449**!
29114	*ACDEL*	2669
291140	*ACDEL*	**415857**
291141	*ACDEL*	**455858**
291142	*ACDEL*	**472144**
291143	*ACDEL*	340356
291144	*ACDEL*	355200
291145	*ACDEL*	**416239**
291147	*ACDEL*	470059
291148	*ACDEL*	**482253**
291149	*ACDEL*	**473235**
29115	*ACDEL*	2689S
291150	*ACDEL*	**451948**
291151	*ACDEL*	**411500**
291152	*ACDEL*	**471835**
291153	*ACDEL*	**470487**
291154	*ACDEL*	**471862**
291155	*ACDEL*	**451182**
291156	*ACDEL*	**415041**
291157	*ACDEL*	**416892**
291158	*ACDEL*	**415058**
291159	*ACDEL*	415060
291160	*ACDEL*	**415351**
291161	*ACDEL*	415064
291162	*ACDEL*	**415437**
291163	*ACDEL*	417267
291164	*ACDEL*	**417481**
291165	*ACDEL*	**416024**
291166	*ACDEL*	**455336**
291167	*ACDEL*	**417541**
291168	*ACDEL*	**415447**
291169	*ACDEL*	**417262**
29117	*HYST*	**450040**
291170	*ACDEL*	455547
291171	*ACDEL*	**417506**
291172	*ACDEL*	**417480**
291173	*ACDEL*	**415958**
291174	*ACDEL*	**416153**
291175	*ACDEL*	456648
291176	*ACDEL*	**410987**
291177	*ACDEL*	**412119**
291178	*ACDEL*	**415458**
291179	*ACDEL*	**473228**
291181	*ACDEL*	3195
291182	*ACDEL*	3199
291183	*ACDEL*	3214
291184	*ACDEL*	5871
291188	*ACDEL*	5M289
29119	*ACDEL*	5124
291196	*ACDEL*	5M497
291198	*ACDEL*	JV701
291199	*ACDEL*	JV1210=
2912	*ACDEL*	**472164**
29120	*ACDEL*	5313
291201	*ACDEL*	**470712**
291206	*ACDEL*	1062=
29121	*ACDEL*	5401
291216	*ACDEL*	1208
291218	*ACDEL*	42X55X8
291219	*SPG*	5113
291219	*SPG*	7721!
29122	*ACDEL*	5403
291221	*ACDEL*	**473241**
291222	*SPG*	7107A=
291222C91	*IH*	**415458**
291223	*ACDEL*	**471316**
291225	*ACDEL*	**473230**
291229	*ACDEL*	6245S=
291232	*ACDEL*	**416892**
291235	*ACDEL*	8996S=
291237	*ACDEL*	**417159**
291238	*ACDEL*	45187S
29124	*ACDEL*	5405
291240	*ACDEL*	50501
291241	*ACDEL*	50560
291242	*ACDEL*	**415043**
291243	*ACDEL*	**415711**
291244	*ACDEL*	55353
291245	*ACDEL*	55367=
291247	*ACDEL*	**415077**
291249	*ACDEL*	**417602**
29125	*ACDEL*	5406
291250	*ACDEL*	**416888**
291251	*ACDEL*	**416394**
291252	*ACDEL*	417516
291253	*ACDEL*	**417238**
291254	*ACDEL*	**455584**
291255	*ACDEL*	455178=
291256	*ACDEL*	**417495**
291257	*ACDEL*	**415394**
291258	*ACDEL*	**455536**
291259	*ACDEL*	**416070**
291260	*ACDEL*	455614
291261	*ACDEL*	**416288**
291263	*ACDEL*	**417159**
291264	*ACDEL*	**416288**
291265	*ACDEL*	**416239**
291266	*ACDEL*	**417596**
291267	*ACDEL*	**417238**
291268	*ACDEL*	**455584**
291269	*ACDEL*	417267
29127	*ACDEL*	5408
291270	*ACDEL*	**416024**
291271	*ACDEL*	**415394**
291272	*ACDEL*	**473238**
291273	*ACDEL*	**410987**
291274	*ACDEL*	456618
29128	*ACDEL*	5410
2913	*ACDEL*	**473238**
29130	*ACDEL*	5452
291312	*BR-ST*	**471224**!
29132	*ACDEL*	5458
29133	*ACDEL*	5471
29134	*ACDEL*	5472=
291348R91	*IH*	**471765**!
291349R91	*IH*	**471765**!
29135	*ACDEL*	5473
29136	*ACDEL*	5481
29139	*ACDEL*	5487
2914	*ACDEL*	**470898**
29141	*ACDEL*	5494
29141	*NEHO*	**474278**!
29142	*ACDEL*	5495
29142	*NEHO*	**472439**
29142	*SPERY*	**472439**
29142	*VICK*	**472439**
29143	*ACDEL*	5573
291430	*BENDI*	340872
29144	*ACDEL*	5578
29144	*EATON*	**473215**!
29145	*ACDEL*	5589
2914518	*CHRYS*	**415085**!
2914518	*CHRYS*	456648
29146	*ACDEL*	5751
29147	*ACDEL*	**414045**
29149	*ACDEL*	5871
29154	*ACDEL*	5951
29155	*ACDEL*	5957S
29156	*ACDEL*	370036A
29156	*ACDEL*	370338A
29158	*ACDEL*	6077
29159	*ACDEL*	6090S
291596R91	*IH*	**471272**!
2916	*ACDEL*	1180
29160	*ACDEL*	6241S
29161	*ACDEL*	6270
29162	*ACDEL*	6358
29164	*ACDEL*	**473228**
29165	*ACDEL*	6465
29167	*ACDEL*	6532S=
291675	*BR-ST*	**472354**!
29169	*ACDEL*	6592S=
2917	*ACDEL*	1181
29171	*ACDEL*	6635S
29172	*ACDEL*	6643S
29173	*CHERY*	**481864**
29174	*ACDEL*	485497
29174	*CHERY*	**470088**
29177	*ACDEL*	6864S
29178	*ACDEL*	6872S
29179	*ACDEL*	**417254**
2918	*ACDEL*	1187
29180	*ACDEL*	6897=
29181	*ACDEL*	9568
29182	*UNIVE*	450038
29183	*ACDEL*	6966S
29183	*MICH*	450038
291832	*BR-ST*	**471646**!
291832R1	*IH*	**417602**!
29184	*ACDEL*	7006S
291841	*BR-ST*	**471267**!
29185	*ACDEL*	7154S
291851R91	*IH*	**416476**!
291852R91	*IH*	**416476**!
29186	*ACDEL*	7245
29187	*ACDEL*	7376=
29188	*ACDEL*	7686S
29189	*ACDEL*	7687S
2919	*ACDEL*	1960
29191	*ACDEL*	7886S
29192	*ACDEL*	7896S
29193	*ACDEL*	8133S
29194	*ACDEL*	**473228**
29195	*ACDEL*	8429S
29196	*ACDEL*	8477S
29197	*ACDEL*	8549S
291973R91	*IH*	**417967**!
29198	*ACDEL*	8594S
29199	*ACDEL*	8597S
291FF123-L	*C-R*	6098=
292-110	*ACDEL*	**417158**
292-12	*ACDEL*	5778
292-128	*ACDEL*	2286
292-135	*ACDEL*	710166
292-3P76127	*LUF*	**473243**
292-42	*ACDEL*	8460N
292-45	*ACDEL*	8610
292-7	*ACDEL*	2043
292-73	*ACDEL*	**411330**
292025R91	*IH*	**415076**
292030R91	*IH*	**417562**
2921	*ACDEL*	**472492**
29210	*NOK*	223410
29210	*NOK*	710416
292100	*ACDEL*	**450776**
292100	*NATL*	292100
292101	*ACDEL*	**450984**
292102	*ACDEL*	**451078**
292104	*ACDEL*	**416444**
292105	*ACDEL*	**417211**
292106	*ACDEL*	**417539**
292107	*ACDEL*	**417349**
292108	*ACDEL*	**417159**
292109	*ACDEL*	**416404**
29211	*ACDEL*	**450666**
292111	*ACDEL*	**455356**
292112	*ACDEL*	**415371**
292113	*ACDEL*	**415437**
292114	*ACDEL*	**417518**
292115	*ACDEL*	**455500**
292116	*ACDEL*	**416292**
292117	*ACDEL*	**473452**
292118	*ACDEL*	**471193**
292119	*ACDEL*	471707N
292120	*ACDEL*	**472747**
292121	*ACDEL*	**415458**
292122	*ACDEL*	**416654**
292123	*ACDEL*	**417484**
292124	*ACDEL*	**415483**
292125	*ACDEL*	**415960**
292126	*ACDEL*	**477069**
292127	*ACDEL*	**471272**
292129	*ACDEL*	225230
292130	*ACDEL*	2642
292131	*ACDEL*	5126
292132	*ACDEL*	**473274**
292136	*ACDEL*	5M643
292138	*ACDEL*	**472258**
29214	*ACDEL*	**471224**

! Industrial Size/Type
= The U.S. customer service number is 877-4-TIMKEN. The Canadian customer service numbers are 800-565-4927 (English) and 800-565-0438 (French-Canadian).

Mfr. No.	Name	Zero Duplication or Recommended Industrial
292144R91	IH	**473234**
292151	ACDEL	223542
292152	ACDEL	1173
292153	ACDEL	1176
292154	ACDEL	1177
292155	ACDEL	224520
292156	ACDEL	32X58X8
292157	ACDEL	1216N
29216	ACDEL	5921
292163	ACDEL	50419
292164	ACDEL	**473441**
292165	ACDEL	**470487**
292167	ACDEL	**473258**
29219	ACDEL	6127
2921OS	JN-MN	**474265**
2922	ACDEL	1170
2922	SPG	710046
292209	ACDEL	2876
29221	ACDEL	6612S
292210	ACDEL	370004A
292211	ACDEL	7131
292212	ACDEL	8020S
292214	ACDEL	**55301S**
292215	ACDEL	55309=
292216	ACDEL	**415371**
292217	ACDEL	**415001**
292218	ACDEL	**417350**
29222	ACDEL	6649
292223	ACDEL	**410496**
292225	ACDEL	**416294**
292226	ACDEL	**416706**
292227	ACDEL	450467
292228	ACDEL	416163
292229	ACDEL	**455260**
29223	C-R	**416956**
292230	ACDEL	455290
292231	ACDEL	**415350**
292232	ACDEL	417537
292233	ACDEL	455375=
292234	ACDEL	**455434**
292235	ACDEL	417497
292236	ACDEL	**417551**
292237	ACDEL	**416332**
292239	ACDEL	**472636**
29224	ACDEL	6808N
29224	C-R	**416956**
292240	ACDEL	**472924**
292241	ACDEL	**415371**
292242	ACDEL	**417551**
292243	ACDEL	**416332**
292244	ACDEL	**415350**
29225	ACDEL	6818
29227	ACDEL	6930
29228	ACDEL	7044NA
29229	ACDEL	5126
2922OS	JN-MN	**473224**!
2923	ACDEL	224015
29230	ACDEL	7216
29230	C-R	**416956**
29231	ACDEL	**473235**
29231	C-R	**416956**
29233	ACDEL	7378
29234	ACDEL	7457N
29235	C-R	**416956**
29238	ACDEL	8168=
29239	ACDEL	**472070**
2924	ACDEL	224045
29240	C-R	**416956**
29241	ACDEL	8293S
29241	C-R	**416956**
29243	ACDEL	8515N
292439R91	IH	**417020**
29244	ACDEL	**473235**
292446R91	IH	**416107**!
292446R91	IH	455073
292447R91	IH	**416107**!
292447R91	IH	455073
292448R91	IH	**416107**!
292448R91	IH	455073
292472	BR-ST	470328
292472	BR-ST	**481213**!
292473	BR-ST	**471224**!
29249	ACDEL	3604
29250	ACDEL	9316
29251	ACDEL	**410308**
29252	ACDEL	**415960**
29253	ACDEL	**416921**
29254	ACDEL	**416654**
292543R91	IH	**472397**!
29256	ACDEL	**416500**
29257	ACDEL	40185
29258	ACDEL	40286
29259	ACDEL	40337S
292594F60	SPG	292594
2926	ACDEL	224045
2926	HWY	**471766**!
29260	ACDEL	40438S
29260	C-R	**417159**
292606	ACF	**416654**
29261	ACDEL	**471787**
29262	ACDEL	50402
29262	C-R	**417159**=
29263	ACDEL	**410737**
29264	JNSON	**471271**!
29264	NOK	223553
29265	ACDEL	**484054**
29265	C-R	**417159***
29266	ACDEL	55028
29267	ACDEL	55199=
29268	ACDEL	**412119**
29269	ACDEL	**472179**
29270	ACDEL	**472179**
29270	C-R	**417159***
29271	ACDEL	410686N
29271	C-R	**417159**
292719R91	IH	**415458**
29272	ACDEL	**410737**
29272	C-R	**416500**
292720R91	IH	**412119**!
29273	C-R	**416500**
29273	C-R	4563V
29274	ACDEL	**417344**
29275	ACDEL	**415960**
29275	C-R	**416500***
29276	ACDEL	**416921**
29277	ACDEL	**415036**
29277	C-R	**416500**
29277	C-R	**416500**=
29278	ACDEL	**417487**
29279	ACDEL	**416444**
29280	ACDEL	**416271**
292807C91	IH	713750
29281	ACDEL	**418028**
29282	ACDEL	**415449**
29283	ACDEL	**416404**
29284	ACDEL	**415379**
29285	ACDEL	**473215**
29286	ACDEL	**470334**
2928694	GMC	**417505**
2928694	GMC	6864S
29287	ACDEL	**473464**
29288	ACDEL	**410102**
29288	C-R	**416500**
29288	C-R	4563V
29289	ACDEL	**410987**
2929	ACDEL	370003A
29290	ACDEL	**450143**
29290	C-R	**416654***
29291	ACDEL	**471619**
29292	ACDEL	**410190**
29292	C-R	**416654**=
29292	C-R	**416654**!
29293	ACDEL	**411394**
29294	ACDEL	**474255**
292949C91	IH	**415995**!
292949C91	IH	**415995**!
29295	ACDEL	**473231**
29296	ACDEL	**470774**
292966	AUTOZ	TCS45985
29297	ACDEL	**471138**
29298	ACDEL	**450456**
29299	ACDEL	450686
292E765145	LUF	**415551**
292E920110	LUF	**471647**
292E920140	LUF	**471766**!
292E920151	LUF	450129
292E920151	LUF	**472826**!
292E920330	LUF	**417316**!
292E920350	LUF	**416654**!
292E920400	LUF	**476470**
292E920860	LUF	**415551**
292E920960	LUF	**415128**
292N920280	LUF	**413247**!
292SP10731	LUF	**415449**!
292SP10734	LUF	**417487**
292SP10735	LUF	**417357**
292SP10735	LUF	455192!
292SP10736	LUF	**417316**!
292SP10737	LUF	**417196**!
292SP10748	LUF	**416273**!
292SP10759	LUF	**417349**
292SP10789	LUF	**415449**!
292SP10791	LUF	**415995**!
292SP10795	LUF	**415072**
292SP10796	LUF	**416865**!
292SP10797	LUF	**470625**!
292SP10798	LUF	**415991**
292SP10798	LUF	455146!
292SP10816	LUF	**472636**!
292SP65130	LUF	416556!
292SP65130	LUF	**472157**
292SP75906	LUF	**476470**
292SP76127	LUF	**473243**
292SP76371	LUF	**473228**
292SP76685	LUF	**417487**!
292SP76685	LUF	**417487**
292SP76700	LUF	**416888**!
292SP767000	LUF	**416888**!
293-201	ACDEL	**481181**
293-304	ACDEL	**473214**
293-33	ACDEL	**473179**
293-51	ACDEL	7412S
293-65	ACDEL	8792S
293-70	ACDEL	4333N
293-70	ACDEL	9449
293-72	ACDEL	9613S
29300	C-R	**416654**!
29305	C-R	**416654**=
29307A	HYST	**410987**!
29308	HYST	**410987**!
29310	ACDEL	2655
29310	C-R	**416654**!
29310	NOK	223540
293100	ACDEL	331228H
293101	ACDEL	340797
293103	ACDEL	**471267**
293104	ACDEL	**473454**
293105	ACDEL	350909
293106	ACDEL	**473228**
293107	ACDEL	**470334**
293108	ACDEL	**473234**
293109	ACDEL	**471649**
29311	ACDEL	5200
293110	ACDEL	**470712**
293111	ACDEL	**410308**
293112	ACDEL	**472636**
293113	ACDEL	**472164**
293114	ACDEL	**473231**
293115	ACDEL	**470898**
293116	ACDEL	**473227**
293117	ACDEL	**471341**
293118	ACDEL	**471272**
293119	ACDEL	**471829**
29312	ACDEL	5201
293120	ACDEL	**471344**
293121	ACDEL	**417316**
293122	ACDEL	**415995**
293123	ACDEL	**415995**
293124	ACDEL	**476470**
293125	ACDEL	**415991**
293126	ACDEL	**417349**
293127	ACDEL	**415437**
293128	ACDEL	415983N
293129	ACDEL	**415991**
29313	ACDEL	5202
293130	ACDEL	**473225**
293131	ACDEL	6241S
293132	ACDEL	**471820**
293133	ACDEL	**473459**
293134	ACDEL	**473226**
293135	ACDEL	**473447**
293136	ACDEL	**471762**
293137	ACDEL	**471763**
293138	ACDEL	**471764**
293139	ACDEL	**471765**
29314	ACDEL	5203
293140	ACDEL	**471766**
293141	ACDEL	**471801**
293142	ACDEL	**473016**
293143	ACDEL	**472179**
293144	ACDEL	**471571**
293145	ACDEL	**473229**
293146	ACDEL	**473010**
293147	ACDEL	**471649**
293148	ACDEL	**470590**
293149	ACDEL	**473211**
29315	ACDEL	5204
293150	ACDEL	**470682**
293151	ACDEL	**473239**
293152	ACDEL	**472394**
293153	ACDEL	**472012**
293154	ACDEL	**472015**
293155	ACDEL	**473457**
293156	ACDEL	**410308**
293157	ACDEL	**472016**
293158	ACDEL	**472016**
293159	ACDEL	450313
29316	ACDEL	5205
29316	C-R	**416654**!
293160	ACDEL	**473243**
293161	ACDEL	**473245**
293162	ACDEL	**472636**
293163	ACDEL	**412871**
293164	ACDEL	**471870**
293165	ACDEL	**470898**
293166	ACDEL	**471652**
293167	ACDEL	**473197**
293168	ACDEL	**473445**

! Industrial Size/Type * Minor Width Difference

= The U.S. customer service number is 877-4-TIMKEN. The Canadian customer service numbers are 800-565-4927 (English) and 800-565-0438 (French-Canadian).

Mfr. No.	Name	Zero Duplication or Recommended Industrial
293169	ACDEL	**472164**
29317	ACDEL	5206
29317	C-R	**416654***
29317	C-R	**416654!**
293170	ACDEL	**471271**
293171	ACDEL	**472258**
293172	ACDEL	**470565**
293173	ACDEL	**413248**
293174	ACDEL	**410737**
293175	ACDEL	**470898**
293178	ACDEL	**451143**
293179	ACDEL	**472164**
29318	ACDEL	5207
293180	ACDEL	451169N
293181	ACDEL	**415988**
293182	ACDEL	**416332**
293183	ACDEL	**415379**
293184	ACDEL	**417484**
293185	ACDEL	**417484**
293186	ACDEL	**415483**
2931862	CHRYS	5126
293187	ACDEL	**457291**
2931875	CHRYS	8835S
293188	ACDEL	**470380**
293189	ACDEL	**472185**
293190	ACDEL	**472705**
293191	ACDEL	**471827**
293192	ACDEL	**470687**
293193	ACDEL	**470898**
293194	ACDEL	**471554**
293195	ACDEL	**471341**
293196	ACDEL	472189A
293197	ACDEL	**470898**
293198	ACDEL	**471424**
293199	ACDEL	**473445**
2932	ACDEL	1163=
293200	ACDEL	**470954**
293202	ACDEL	**482163**
293203	ACDEL	**471652**
293204	ACDEL	**415483**
293205	ACDEL	223840
293206	ACDEL	33X50X12
293207	ACDEL	2506
293208	ACDEL	2658
293209	ACDEL	2876
293210	ACDEL	6847S
293211	ACDEL	8421S
293212	ACDEL	5MR1300
293214	ACDEL	**473010**
293218	ACDEL	1041
29322	ACDEL	5201
29322	C-R	**416654**
293223	ACDEL	1094=
293224	ACDEL	1097N
293226	ACDEL	222510
293227	ACDEL	222510
293228	ACDEL	33X50X12
293229	ACDEL	1193
29323	ACDEL	5200
293230	ACDEL	223240
293236	ACDEL	1215
293236	ACDEL	1215N
293238	ACDEL	9599S
293239	ACDEL	**473215**
293246	ACDEL	**473228**
293249	ACDEL	**471539**
293250	ACDEL	**473234**
293251	ACDEL	**471801**
293252	ACDEL	**472179**
293253	ACDEL	**472164**
293255	ACDEL	**415988**
293256	ACDEL	470059N
293257	ACDEL	**473214**
293258	ACDEL	473468
29326	ACDEL	**472258**
293261	ACDEL	**473445**
293265	ACDEL	**472258**
293266	ACDEL	**471413**
293267	ACDEL	**471413**
293268	ACDEL	**455134**
293269	ACDEL	**473460**
29327	ACDEL	5976S
293271	ACDEL	50075=
293273	ACDEL	480491
293274	ACDEL	50528
293277	ACDEL	343185
293279	ACDEL	350942
293280	ACDEL	**472636**
293281	ACDEL	**415991**
293282	ACDEL	**417191**
293283	ACDEL	**417344**
293284	ACDEL	473412
293285	ACDEL	450311
293286	ACDEL	**450362**
293288	ACDEL	450415
293289	ACDEL	**450604**
29329	ACDEL	**473214**
293290	ACDEL	**450911N**
293291	ACDEL	**416332**
293292	ACDEL	**472164**
293293	ACDEL	**473212**
293294	ACDEL	**471570**
293295	ACDEL	**472258**
293296	ACDEL	**470530**
293297	ACDEL	**472185**
293298	ACDEL	**412119**
293299	ACDEL	**471424**
2933	ACDEL	1167
29330	ACDEL	**410987=**
293300	ACDEL	**417343**
293301	ACDEL	**473367**
293302	ACDEL	**471801**
293303	ACDEL	**415483**
293305	ACDEL	**471424**
293306	ACDEL	**473212**
293307	ACDEL	410059
29331	US-EL	**474255**
29332	ACDEL	**471829**
29334	ACDEL	**470954**
29335	ACDEL	6847S
293353R91	IH	**415483!**
29336	ACDEL	**471827**
29337	ACDEL	**470898**
29339	ACDEL	**473459**
2934	ACDEL	3771
29340	ACDEL	7018N=
29341	ACDEL	410059
29342	ACDEL	9613S
29343	ACDEL	**473234**
29344	ACDEL	**472354**
29346	ACDEL	7188S
29347	ACDEL	**471344**
29348	ACDEL	7300S
29350	ACDEL	7399S
29352	ACDEL	7442H
29353	ACDEL	**473214**
29355	ACDEL	342805
29356	ACDEL	353135
29357	ACDEL	**473473**
29358	ACDEL	7692S
2936	ACDEL	2361
29360	ACDEL	7751H
29360	C-R	**416654***
29362	ACDEL	7929S
29363	ACDEL	**473473**
29364	ACDEL	**471827**
29367	ACDEL	8935S
29367	BR-ST	**471567!**
29368	BR-ST	**450593!**
29369	ACDEL	9376
2937	ACDEL	2443
29370	C-R	**416654!**
29371	ACDEL	9487
29371	C-R	**416654!**
293714	SPG	1967
29373	ACDEL	410059
293739R1	NAVST	425RR
29375	ACDEL	**471827**
29375	C-R	**416654!**
293751	SPG	1174
293751	SPG	38X52X8.5!
29376	ACDEL	**471829**
29377	ACDEL	**415991**
29378	ACDEL	**415991**
29379	ACDEL	**418028**
2937D	GOODM	**416332!**
2938	ACDEL	2503
2938	ACDEL	2503N
29380	ACDEL	**415991**
29381	ACDEL	**472394**
29382	ACDEL	**470898**
29382	EATON	370023A
29382	EATON	456618
29383	ACDEL	**471554**
29383	C-R	**416654!**
29384	ACDEL	**470954**
29384	C-R	**417486**
29385	ACDEL	340771
29385	C-R	**417486**
29386	ACDEL	**473463**
29387	ACDEL	50266
29387	NOK	710112
29388	ACDEL	**470506**
29389	ACDEL	51032S
2938D	GOODM	**415937!**
2939	ACDEL	2551
29390	ACDEL	**471413**
29390	C-R	**417486**
29391	ACDEL	**473367**
29391	C-R	**417486**
29392	ACDEL	**472287**
29393	ACDEL	240009
29394	ACDEL	240698
29394PTB	TRSCM	**416500!**
29395	ACDEL	240816
29396	ACDEL	311189
29397	ACDEL	**472354**
29398	ACDEL	**331107N**
29399	ACDEL	331227H
29404PTB	TRSCM	**416654**
29404TA	TRSCM	**416654**
29405	C-R	**417486**
29406	C-R	**417486***
29408011	GARLK	**471645**
2940D	GOODM	55028
2941	ACDEL	1010=
29410	ACDEL	7840S
29411	ACDEL	**471538**
29412	ACDEL	8059S
29413	ACDEL	**471538**
29413TA	TRSCM	**417486**
29414	ACDEL	40101S
29415	ACDEL	**471571**
29416	ACDEL	240319
294160	BR-ST	**471554!**
294167	BR-ST	**471270!**
29417	ACDEL	40401
29418	ACDEL	40433S
29419	ACDEL	**472560N**
2942	ACDEL	1049
2942	NATL	7782N
29420	ACDEL	**474278**
29420	C-R	475348N*
29421	ACDEL	**352541**
29422	ACDEL	**472311**
29423	ACDEL	**323138**
29424	ACDEL	**415995**
29424	C-R	227530
29425	ACDEL	240151
29426	ACDEL	240356
29427	ACDEL	6703S
29428	ACDEL	240414
29429	ACDEL	240731
29430	ACDEL	240733
29430	C-R	**455356**
29431	ACDEL	240735
29432	ACDEL	240736
29433	ACDEL	**470954**
29434	ACDEL	**472560N**
29435	ACDEL	340413
29435	NOK	1147
29436	ACDEL	**254270**
29436	NOK	1146
29437	ACDEL	340724
29437	NOK	1147
29438	ACDEL	340787
29438	NOK	1036
29439	ACDEL	**471413**
29440	ACDEL	**471766**
29440	C-R	**455356***
29441	ACDEL	**471689**
29442	ACDEL	**471267**
29443	ACDEL	**472185**
29444	ACDEL	**471466**
29445	ACDEL	**471551**
29446	ACDEL	**473179**
29447	ACDEL	**470625**
29448	ACDEL	**473237**
29449	ACDEL	**474276**
2945	ACDEL	**471267**
29454	ACDEL	1037
29456	ACDEL	7399S
29457	ACDEL	6597S
29458	ACDEL	**480821**
29459	ACDEL	6597S
2946	ACDEL	6859S
29460	ACDEL	43071S
29460	C-R	**455356***
294606	BR-ST	441130
29461	ACDEL	**471689**
29462	ACDEL	**472157**
29463	ACDEL	450532
29464	ACDEL	**471224**
29465	ACDEL	**415995**
29465	C-R	**455356***
29466	ACDEL	**473179**
2947	ACDEL	**471267**
29471	C-R	712937
294769C91	IH	370004A
2948	ACDEL	7013S
29480	C-R	370199A
2949	ACDEL	**471652**
294FF128	C-R	6064
294FF28	C-R	6064
295	C-P	**450593!**
295-24	ACDEL	9845
29505	C-R	710240
2951	ACDEL	1110

! Industrial Size/Type * Minor Width Difference

= The U.S. customer service number is 877-4-TIMKEN. The Canadian customer service numbers are 800-565-4927 (English) and 800-565-0438 (French-Canadian).

Mfr. No.	Name	Zero Duplication or Recommended Industrial
29510	ACDEL	6636S
29510	C-R	75X90X10
29510	C-R	75X90X8!
29512	ACDEL	**470712**
29512	C-R	75X90X10!
29513	ACDEL	6759S
29513	C-R	75X90X10!
29514	ACDEL	6936S
29515	ACDEL	3103
29516	ACDEL	3103
29517	ACDEL	**473237**
29518	ACDEL	3095
29519	ACDEL	**415449**
2952	ACDEL	3095
29520	ACDEL	**350936**
29520	C-R	710376
29522	ACDEL	8804S=
29523	ACDEL	9599S
29524	C-R	75X95X10!
2952467	CHRYS	6808N
29525	ACDEL	**472439**
29525	C-R	227530
29525	C-R	75X95X10!
29526	C-R	716445
29526	C-R	75X95X10V!
29527	ACDEL	42260S
29527	C-R	75X95X10V
29528	ACDEL	**476470**
29529	ACDEL	321460
2953	ACDEL	5115
29530	C-R	75X95X10V
29531	ACDEL	**473231**
29531	BR-ST	**471354**!
29532	ACDEL	332062
29533	ACDEL	3945
29534	ACDEL	**350936**
29535	ACDEL	**472439**
29536	ACDEL	**410708**
29537	ACDEL	**476470**
29537	C-R	227530*
29537	C-R	75X95X10!*
29538	ACDEL	**472082**
29539	ACDEL	450096
2953962	CHRYS	442380
2954	ACDEL	**415937**
29540	ACDEL	**470354**
29540	C-R	227540
29540	C-R	227550*
29540	C-R	75X100X12!
2954018	CHRYS	40769S
29541	ACDEL	**450400**
2954128	CHRYS	**410308**!
2954128	CHRYS	473468
2954147	PEERC	**471567**!
2954148	PEERC	**473227**
295416	PEERC	**415327**
29542	ACDEL	**474272**
29542	C-R	227550*
29542	C-R	75X100X10V
29543	ACDEL	**473454**
29543	C-R	75X100X10
29544	ACDEL	**472082**
29544	C-R	75X100X10V
29545	ACDEL	472341
29545	C-R	75X100X10V
29546	ACDEL	480574H
29547	ACDEL	**471195**
2954738	CHRYS	**417487**
29548	ACDEL	**471504**
29549	ACDEL	3103
2955	ACDEL	5587
2955098	CHRYS	**415458**!
29551	ACDEL	5M81
29553	ACDEL	5M445
29555	C-R	75X105X13
2955635	CHRYS	**481181**!
2955637	CHRYS	**471271**!
29557	ACDEL	**472164**
29558	ACDEL	224040
2955840	CHRYS	370003A
2955842	CHRYS	370023A
2955843	CHRYS	370034A
2955RC	SUL	**415711**
29563	ACDEL	**413246**
29563	C-R	710384
29563	C-R	75X100X12!
29564	ACDEL	2955
29565	ACDEL	**472409**
29566D	IH	**474265**
29567	ACDEL	**471271**
29567	C-R	75X105X13!
29568	ACDEL	**411253**
2956OS	JN-MN	**415035**
2956OS	JN-MN	**415035**!
2957	ACDEL	**470354**
29570	ACDEL	**415938**
29570	C-R	75X110X12
29571	ACDEL	**415449**
29572	ACDEL	**417171**
29573	ACDEL	**417344**
29574	ACDEL	**473474**
295749R91	IH	**473231**!
29575	ACDEL	**472185**
29575	C-R	75X110X12!
29576	ACDEL	**472492**
29577	ACDEL	**417316**
29578	ACDEL	**473231**
29579	ACDEL	**471504**
2958	ACDEL	**473179**
29585	C-R	75X115X10*
29585	C-R	75X115X12
29587	C-R	75X120X10*
2959	ACDEL	**410708**
29590	C-R	200322
295957	SPG	8976S
295FF126	C-R	5070
295FF128	C-R	6064
295FF131	C-R	41081S=
295G131	C-R	40370S
296-01	ACDEL	3945
296-8	ACDEL	5092
296-9	ACDEL	5095
2960381	CHRYS	370033A
296051	SPG	**418028**
2961	ACDEL	226020
2961012	LILIS	**473227**!
29611	ACDEL	5108
2961188	CHRYS	9316
2961190	CHRYS	5778
29612	ACDEL	5111
29612	ACDEL	5111S
29613	ACDEL	5112S
29614	ACDEL	5116
2961493	CHRYS	9773
29615	ACDEL	5117
2961607	CHRYS	**474276**
2961618	CHRYS	**415991**
2961618	CHRYS	**415991**!
29619	ACDEL	5337
2961985	IVECO	713119
2962	ACDEL	227040
29620	ACDEL	5095
29624	ACDEL	5390
29628	JOHND	**473239**
29629	ACDEL	5419
2963	ACDEL	5026
29637	ACDEL	5460
296377	SPG	8975S
29639	ACDEL	5479
296390C91	IH	370048A
296392C91	IH	370007A
296393C91	IH	370001A
296394C91	IH	370019A
296396C92	IH	370019A
2963RH	SPG	1987
2964	ACDEL	5070
296409C91	IH	370033A
29642	ACDEL	5576
296437C91	IH	370021A
296438C91	IH	370036A
296438C91	IH	370349A
296440C91	IH	370003A
296441C91	IH	370030A
296448C1	IH	730017
29645	ACDEL	5585
29646	ACDEL	5072
29647	ACDEL	5591
29649	ACDEL	**415284**
2965	ACDEL	5072
29650	ACDEL	7014S
296501C91	IH	**415458**
296509C1	IH	**415458**
29651	ACDEL	40301S
29652	ACDEL	351487
29653	ACDEL	75251S
296543	ACF	**416130**!
29655	ACDEL	335924N
29656	ACDEL	345035
29657	ACDEL	**471538**
296573	ACF	**416070**
29658	ACDEL	**350974**
29659	ACDEL	**417621**
2965RC	SUL	**417211**!
2966	ACDEL	5073
29660	ACDEL	**417158**
29661	ACDEL	**415035**
29662	ACDEL	**416865**
29663	ACDEL	455251H
29664	ACDEL	**455480**
29665	ACDEL	**415379**
296653	ACF	**416130**!
29666	ACDEL	**480581**
29667H	IH	**411253**!
29668	ACDEL	5MR1301
29669	ACDEL	1040=
29671	ACDEL	5127
29672	ACDEL	5108
29673	ACDEL	5132
29675	C-R	1019
296804	ACF	**416288**
29681	ACDEL	5128N
29683	ACDEL	**412473**
29684	ACDEL	40085S
296842	HYST	**415234**!
29685	ACDEL	50191
29685	C-R	227610
29685	PEERC	**415327**
296863R91	IH	**471224**!
29687	ACDEL	50209
29689	ACDEL	**327303**
29690	ACDEL	415213N
29691	ACDEL	450655=
29692	ACDEL	**451583**
29693	ACDEL	**455583N**
296931R91	IH	**415995**!
29694	ACDEL	455956H
29695	ACDEL	**481644**
29696	ACDEL	**415379**
29697	ACDEL	485725H=
296D4	WHITE	**471271**!
296FF2-L	C-R	205044
296G130	C-R	**470530**!
29700	KELSE	5924
297000C91	IH	**473473**
297001C91	IH	**473473**
29705X	MASSE	**473444**
29708	NOK	321460
2970OS	JN-MN	**473229**
29710	ACDEL	**471750**
29710	NOK	710102
29711	ACDEL	40494S
29712	ACDEL	43089S
29713	ACDEL	203003
29714	ACDEL	203003
29715	ACDEL	203008
29716	ACDEL	203012
29717	ACDEL	203013
29718	ACDEL	203016
29719	ACDEL	203020
2971OS	JN-MN	**473226**
2972	ACDEL	**471316**
29720	ACDEL	203025
2972024	CHRYS	370001A
2972024	CHRYS	380001A
29721	ACDEL	203029
297210	C-R	**471504**!
29722	ACDEL	204002
297226R91	IH	**472924**!
297227R91	IH	416556!
297227R91	IH	**472157**
29723	ACDEL	204008
29724	ACDEL	204013
29725	ACDEL	204017
29726	ACDEL	204020
29727	ACDEL	205015
29728	ACDEL	204020
29728	LEECE	**473444**
29729	ACDEL	441319
2972981	CHRYS	370001A
2972981	CHRYS	380001A
2972M1	C-R	**470530**!
2972OS	JN-MN	**474265**
2973	ACDEL	200354
29730	ACDEL	**412920**
29731	ACDEL	**471267**
29732	ACDEL	**412861**
29733	ACDEL	40154S
29734	ACDEL	204008
297346R91	IH	**471424**!
297347R91	IH	**470565**!
2973650	CHRYS	370007A
2973680	CHRYS	370007A
2973863	CHRYS	417267
2973OS	JN-MN	**471255**!
29742	HYST	**471689**!
29749X	MASSE	**471835**!
2974OS	JN-MN	**470682**
2975	ACDEL	6283S
29750X	MASSE	**473444**
297513	BUC-E	**472157**!
297513	BUC-E	**472157**
297514	BUC-E	415871
297516	BUC-E	55611=
297517	BUC-E	**416107**!
297517	BUC-E	455073
2975320	CHRYS	370057A
2975361	CHRYS	370003A
297591R91	IH	**450084**!

! Industrial Size/Type * Minor Width Difference

= The U.S. customer service number is 877-4-TIMKEN. The Canadian customer service numbers are 800-565-4927 (English) and 800-565-0438 (French-Canadian).

Mfr. No.	Name	Zero Duplication or Recommended Industrial
29759X	MASSE	**450065**
2976	ACDEL	6362=
29760	HYST	**415082**
29761	CHERY	**471192**
2976511	CHRYS	370001A
2976511	CHRYS	380001A
297661	BUC-E	**416125**!
297667	BUC-E	**415645**!
297667	BUC-E	455104
2976698	CHRYS	370023A
2977	ACDEL	6832S
29771X	MASSE	**473231**
2978	ACDEL	6906S
297824	ACF	**473010**
2978604	CHRYS	370057A
2979	ACDEL	7235S
29795	NOK	2955
297951R91	IH	**450084**!
2979957B00	SUZUK	223831
297FF128	C-R	203034
297G128	C-R	6064
29800	C-R	3698
2981	ACDEL	5462
29810	ACDEL	**471442**
298100	ACDEL	50883=
298101	ACDEL	**474256**
298102	ACDEL	**472185**
298103	ACDEL	**412725**
298104	ACDEL	55030
298105	ACDEL	**416282**
298106	ACDEL	**417563**
298107	ACDEL	**417570**
298108	ACDEL	55236
298109	ACDEL	55239=
298110	ACDEL	**415867**
298111	ACDEL	**415349**
298112	ACDEL	55358=
298113	ACDEL	**327303**
298114	ACDEL	**417492**
298115	ACDEL	**415442**
298116	ACDEL	55469
298117	ACDEL	417780
298118	ACDEL	**417433**
298119	ACDEL	**415683**
29812	ACDEL	7107A=
298120	ACDEL	**410825**
298121	ACDEL	200642
298122	ACDEL	200110
298123	ACDEL	200322
298124	ACDEL	200371
298125	ACDEL	200851
298126	ACDEL	203034
298127	ACDEL	204029
298128	ACDEL	204035
298129	ACDEL	205005
298130	ACDEL	205017
298131	ACDEL	205035
298132	ACDEL	210945
298133	ACDEL	**411376**
298134	ACDEL	**415449**
298135	ACDEL	240005
298136	ACDEL	240023
298138	ACDEL	240119
298139	ACDEL	240319
29814	ACDEL	**472924**
298140	ACDEL	**471267**
298141	ACDEL	240462
298142	ACDEL	240716
298143	ACDEL	**453279**
298144	ACDEL	291099
298146	ACDEL	331173
298147	ACDEL	**471466**
298148	ACDEL	**471224**
298149	ACDEL	340136
29815	ACDEL	**452222**
298150	ACDEL	**330385**
298151	ACDEL	**471267**
298152	ACDEL	340400
298153	ACDEL	**254287**
298155	ACDEL	340771
298156	ACDEL	340815
298157	ACDEL	340817
298158	ACDEL	340823
298159	ACDEL	340900
29816	ACDEL	6222
298160	ACDEL	340927
298161	ACDEL	345146
298162	ACDEL	350156
298162	ACDEL	**473096**
298163	ACDEL	**350364**
298164	ACDEL	**473227**
298165	ACDEL	**472311**
298166	ACDEL	**474272**
298167	ACDEL	**471554**
298168	ACDEL	**473367**=
298169	ACDEL	**473232**
29817	ACDEL	6357S
298170	ACDEL	**470530**
298171	ACDEL	**470530**
298172	ACDEL	**411253**
298173	ACDEL	**412119**
298174	ACDEL	**471442**
298175	ACDEL	**471224**
298176	ACDEL	**412920**
298177	ACDEL	**470625**
298178	ACDEL	**470954**
298179	ACDEL	**472287**
29818	ACDEL	6370N
298180	ACDEL	**471763**
298181	ACDEL	**472015**
298182	ACDEL	**471391**
298183	ACDEL	**473243**
298184	ACDEL	**413247**
298185	ACDEL	**471870**
298186	ACDEL	**471271**
298188	ACDEL	**471224**
298189	ACDEL	**471570**
29819	ACDEL	6380
298190	ACDEL	**412473**
298191	ACDEL	**415458**
298192	ACDEL	**415027**
298193	ACDEL	**416125**
298194	ACDEL	**415035**
298195	ACDEL	**415138**
298196	ACDEL	**416865**
298197	ACDEL	**417621**
298198	ACDEL	**417181**
298199	ACDEL	**415725**
2982	ACDEL	5727
2982	CALSO	**472164**!
298200	ACDEL	**476470**
298201	ACDEL	**415984**
298202	ACDEL	**416664**
298203	ACDEL	**415389**
298204	ACDEL	**415498**
298205	ACDEL	415899N
298205	ACDEL	**416624**
298206	ACDEL	**415995**
298207	ACDEL	440972
298208	ACDEL	441130
298209	ACDEL	**350936**
29821	ACDEL	**471442**
298210	ACDEL	**412920**
298211	ACDEL	442251
298211	C-R	50501
298213	ACDEL	**471530**
298214	ACDEL	**471281**
298215	ACDEL	**471532**
298216	ACDEL	**471472**
298217	ACDEL	**471535**
298218	ACDEL	**473405**
29822	ACDEL	483054N
298220	ACDEL	**471549**
298221	ACDEL	**471558**
298222	ACDEL	**471255**
298223	ACDEL	**481073**
298224	ACDEL	**471553**
298225	ACDEL	**471554**
298226	ACDEL	**471567**
298228	ACDEL	**474253**
298229	ACDEL	**471570**
298230	ACDEL	450033
298231	ACDEL	**450039**
298232	ACDEL	**450040**
298233	ACDEL	**450593**
298234	ACDEL	**473419**
298235	ACDEL	450044
298236	ACDEL	**476838**
298237	ACDEL	**473426**
298238	ACDEL	**471750**
298239	ACDEL	**471354**
29824	ACDEL	**455566**
298240	ACDEL	450054
298241	ACDEL	**473438**
298242	ACDEL	**474264**
298243	ACDEL	**471821**
298244	ACDEL	**450065**
298245	ACDEL	**473367**
298246	ACDEL	**473228**
298247	ACDEL	**473232**
298248	ACDEL	**472185**
298249	ACDEL	**472439**
29825	ACDEL	6513
298250	ACDEL	**481864**
298251	ACDEL	450073
298252	ACDEL	**474265**
298253	ACDEL	**474281**
298254	ACDEL	**473444**
298255	ACDEL	**473446**
298256	ACDEL	**473238**
298257	ACDEL	**450084**
298258	ACDEL	**470530**
298259	ACDEL	470086
298260	ACDEL	**473313**
298261	ACDEL	**470088**
298262	ACDEL	**473458**
298263	ACDEL	**473462**
298264	ACDEL	**413469**
298265	ACDEL	**412943**
298266	ACDEL	**411253**
298267	ACDEL	**410694**
298268	ACDEL	**412119**
298269	ACDEL	**473441**
298270	ACDEL	450111
298271	ACDEL	**473467**
298272	ACDEL	**473450**
298273	ACDEL	**472572**
298274	ACDEL	**473449**
298275	ACDEL	**471442**
298276	ACDEL	**471224**
298277	ACDEL	**472409**
298278	ACDEL	**471735**
298279	ACDEL	**472826**
29828	ACDEL	**480630**
298280	ACDEL	**412920**
298281	ACDEL	**450133**
298282	ACDEL	**471192**
298283	ACDEL	**470625**
298284	ACDEL	**471529**
298285	ACDEL	**472234**
298286	ACDEL	**471413**
298288	ACDEL	**473460**
298289	ACDEL	**473205**
29829	ACDEL	6575S
298290	ACDEL	**472287**
298291	ACDEL	**473234**
298292	ACDEL	**471760**
298293	ACDEL	**473424**
298294	ACDEL	**473214**
298295	ACDEL	**473421**
298296	ACDEL	473435
298297	ACDEL	**471747**
298298	ACDEL	**473236**
298299	ACDEL	**450188**
2983	ACDEL	5797
29830	ACDEL	**418028**
298300	ACDEL	**471692**
298301	ACDEL	**472705**
298302	ACDEL	**481443**
298302568	REX	**415449**!
298302668	REX	**417172**
298303	ACDEL	**471231**
298303068	REX	**415082**
298303268	REX	470059
298303268	REX	**470380**!
298303468	REX	**473473**
298303568	REX	**410496**!
298303768	REX	**471424**!
298304	ACDEL	**451583**
298304568	REX	**472179**
298304668	REX	**417343**!
298304768	REX	**471835**!
298304868	REX	**417507**
298304868	REX	**417507**!
298304968	REX	**416364**!
298305	ACDEL	**480210**
298305268	REX	455402=
298305368	REX	**473229**
298306068	REX	**417079**
298306168	REX	**470530**!
298306268	REX	415899N
298306268	REX	**416624**
298306368	REX	415146!
298306368	REX	**415991**
298306768	REX	**473214**!
298306968	REX	**417349**!
298307	ACDEL	**471646**
298307068	REX	**416332**!
298308	ACDEL	**471647**
298308968	REX	**415379**
298309	ACDEL	**471648**
298309468	REX	**417603**!
298310	ACDEL	**471651**
298311	ACDEL	**471684**
298312	ACDEL	472951
298313	ACDEL	**471688**
298314	ACDEL	**471689**
298315	ACDEL	**471705**
298316	ACDEL	**471733**
298317	ACDEL	**470712**
298318	ACDEL	**471744**
298319	ACDEL	**471785**
29832	ACDEL	6590S
298320	ACDEL	**471787**
298321	ACDEL	**471795**
298322	ACDEL	**473439**
298323	ACDEL	**472070**
298324	ACDEL	450269

! Industrial Size/Type

= The U.S. customer service number is 877-4-TIMKEN. The Canadian customer service numbers are 800-565-4927 (English) and 800-565-0438 (French-Canadian).

Mfr. No.	Name	Zero Duplication or Recommended Industrial
298325	ACDEL	**450273**
298326	ACDEL	**474274**
298327	ACDEL	**471141**
298328	ACDEL	**472144**
298329	ACDEL	**472397**
29833	ACDEL	6644
298330	ACDEL	**473461**
298331	ACDEL	**450307**
298332	ACDEL	**471391**
298333	ACDEL	**473242**
298334	ACDEL	**412040**
298335	ACDEL	**472029**
298336	ACDEL	**413478**
298337	ACDEL	**470605**
298338	ACDEL	**450339**
298339	ACDEL	**450341**
29834	ACDEL	**470954**
298340	ACDEL	**450342**
298341	ACDEL	**474254**
298342	ACDEL	**413247**
298343	ACDEL	**471504**
298344	ACDEL	**472164**
298345	ACDEL	**471538**
298346	ACDEL	**473448**
298347	ACDEL	**472193**
298348	ACDEL	**472492**
298349	ACDEL	**473227**
29835	ACDEL	6663S
298350	ACDEL	**471267**
298351	ACDEL	**471424**
298352	ACDEL	**473442**
298353	ACDEL	**471539**
298354	ACDEL	**472299**
298355	ACDEL	**471341**
298356	ACDEL	**450446**
298357	ACDEL	**471270**
298358	ACDEL	**473224**
298359	ACDEL	**472319**
29836	ACDEL	6703S
298360	ACDEL	**473440**
298361	ACDEL	450463
298362	ACDEL	**450472**
298363	ACDEL	**450474**
298364	ACDEL	**471818**
298365	ACDEL	**473244**
298366	ACDEL	**450492**
298367	ACDEL	**471272**
298368	ACDEL	**473423**
298369	ACDEL	**410524**
29837	ACDEL	**473229**
298370	ACDEL	**471689**
298371	ACDEL	**471744**
298372	ACDEL	**472150**
298373	ACDEL	**471224**
298374	ACDEL	**471808**
298375	ACDEL	**412027**
298376	ACDEL	**413246**
298377	ACDEL	**471498**
298378	ACDEL	**470390**
298379	ACDEL	**450621**
29838	ACDEL	**410496**
298380	ACDEL	**481073**
298381	ACDEL	**471570**
298382	ACDEL	**471737**
298383	ACDEL	**471984**
298383TA	TRSCM	**417159**
298384	ACDEL	**481397**
298385	ACDEL	**471466**
298386	ACDEL	**473203**
298387	ACDEL	**473474**
298388	ACDEL	**473517**
298389	ACDEL	**481792**
29839	ACDEL	**417210**
298390	ACDEL	**471652**
298391	ACDEL	**470774**
298392	ACDEL	**472475**
298393	ACDEL	**471567**
298394	ACDEL	**471649**
298395	ACDEL	**471413**
298396	ACDEL	**451817**
298397	ACDEL	**451857**
298398	ACDEL	**470334**
298399	ACDEL	**474276**
2984	ACDEL	5865
29840	ACDEL	6863S
29840	C-R	710028
298400	ACDEL	**417073**
298401	ACDEL	**415001**
298402	ACDEL	**415458**
298403	ACDEL	**417316**
298404	ACDEL	**455005**
298405	ACDEL	**417344**
298406	ACDEL	**415007**
298407	ACDEL	**455008**
298408	ACDEL	**415960**
298409	ACDEL	**416921**
29841	ACDEL	6886S
298410	ACDEL	**416654**
298411	ACDEL	**415995**
298412	ACDEL	**417487**
298413	ACDEL	**416288**
298414	ACDEL	**456105**
298415	ACDEL	**476470**
298416	ACDEL	**455019**
298417	ACDEL	**415021**
298418	ACDEL	455022
298419	ACDEL	**415023**
29842	ACDEL	**471141**
29842	C-R	**415449**
298420	ACDEL	455024
298421	ACDEL	**415025**
298422	ACDEL	**455026**
298423	ACDEL	**415027**
298424	ACDEL	**415027**
298425	ACDEL	**416125**
298426	ACDEL	**416339**
298427	ACDEL	455033
298428	ACDEL	**415034**
298429	ACDEL	**415035**
29843	ACDEL	7186S
298430	ACDEL	**415036**
298431	ACDEL	455037
298432	ACDEL	**416891**
298433	ACDEL	**415045**
298434	ACDEL	**415138**
298435	ACDEL	**415066**
298437	ACDEL	**417273**
298438	ACDEL	**416865**
298439	ACDEL	**417546**
29844	ACDEL	7338N
298440	ACDEL	**415072**
298441	ACDEL	455073
298442	ACDEL	**416476**
298443	ACDEL	**455079**
298444	ACDEL	**416239**
298445	ACDEL	**417487**
298446	ACDEL	**415088**
298447	ACDEL	**416167**
298448	ACDEL	**411376**
298449	ACDEL	**416271**
29845	ACDEL	7354N
298450	ACDEL	**411245**
298451	ACDEL	**415302**
298452	ACDEL	455104
298453	ACDEL	**415938**
298454	ACDEL	**417556**
298455	ACDEL	**416666**
298456	ACDEL	**417562**
298457	ACDEL	**416229**
298458	ACDEL	**455121**
298459	ACDEL	**417602**
29846	ACDEL	7456N
298460	ACDEL	**415128**
298461	ACDEL	**417474**
298462	ACDEL	**455134**
298463	ACDEL	**418028**
298464	ACDEL	**415142**
298465	ACDEL	**455144**
298466	ACDEL	**417172**
298467	ACDEL	**415991**
298468	ACDEL	**415449**
298469	ACDEL	**417343**
29847	ACDEL	7700S
298470	ACDEL	**415150**
298471	ACDEL	**455151**
298472	ACDEL	**417134**
298473	ACDEL	**417486**
298474	ACDEL	**417351**
298475	ACDEL	**417621**
298476	ACDEL	**417488**
298477	ACDEL	**417171**
298478	ACDEL	**417181**
298479	ACDEL	**412473**
29848	ACDEL	8126S
298480	ACDEL	**417191**
298481	ACDEL	**417492**
298482	ACDEL	**417196**
298483	ACDEL	**415937**
298484	ACDEL	**417210**
298485	ACDEL	**417967**
298486	ACDEL	455188
298487	ACDEL	**455189**
298488	ACDEL	**417357**
298489	ACDEL	**455194**
29849	ACDEL	8370S
298490	ACDEL	**472157**
298491	ACDEL	**415196**
298492	ACDEL	455197N
298493	ACDEL	455197N
298494	ACDEL	**415196**
298495	ACDEL	**416888**
298496	ACDEL	**416888**
298497	ACDEL	455203
298498	ACDEL	**416137**
298499	ACDEL	**416154**
2985	ACDEL	**455280**
29850	ACDEL	8635S
298500	ACDEL	**416158**
298501	ACDEL	**417247**
298502	ACDEL	**415219**
298503	ACDEL	**417538**
298504	ACDEL	**415234**
298505	ACDEL	**415303**
298506	ACDEL	**415263**
298507	ACDEL	**456305**
298508	ACDEL	**417605**
298509	ACDEL	**415725**
29851	ACDEL	8750S
298510	ACDEL	**416706**
298511	ACDEL	**417254**
298512	ACDEL	**455280**
298513	ACDEL	**416364**
298514	ACDEL	**415294**
298515	ACDEL	**415295**
298516	ACDEL	**417082**
298517	ACDEL	**417601**
298518	ACDEL	**476470**
298519	ACDEL	455308
29852	ACDEL	8907
298520	ACDEL	455310
298521	ACDEL	**415984**
298522	ACDEL	417536
298523	ACDEL	**455330**
298524	ACDEL	**415284**
298525	ACDEL	**415284**
298526	ACDEL	**415379**
298527	ACDEL	**416956**
298528	ACDEL	**415389**
298529	ACDEL	**417350**
29853	ACDEL	9773
298530	ACDEL	**415937**
298531	ACDEL	**417555**
298532	ACDEL	**415498**
298534	ACDEL	**415551**
298535	ACDEL	455556
298536	ACDEL	**455566**
298537	ACDEL	**418028**
298538	ACDEL	455685
298539	ACDEL	**416267**
29854	ACDEL	**417316**
29854	C-R	100495
29854	C-R	**417349***
298540	ACDEL	**416364**
298541	ACDEL	**416071**
298542	ACDEL	**415995**
298543	ACDEL	3016
298545	ACDEL	**417530**
298546	ACDEL	**417191**
298547	ACDEL	456744N
298548	ACDEL	**472439**
298549	ACDEL	**470625**
298550	ACDEL	**471766**
298551	ACDEL	**471341**
298552	ACDEL	**472164**
298553	ACDEL	**471267**
298554	ACDEL	**471466**
298555	ACDEL	**470954**
298556	ACDEL	**471076**
298557	ACDEL	**471652**
298558	ACDEL	**471272**
298559	ACDEL	**471571**
29856	C-R	100495
29856	C-R	**417349**
298560	ACDEL	**471413**
298561	ACDEL	**471737**
298562	ACDEL	**473238**
298563	ACDEL	**472397**
298564	ACDEL	**472324**
298565	ACDEL	**415458**
298566	ACDEL	**471442**
298567	ACDEL	**472258**
298568	ACDEL	**480821**
298569	ACDEL	**480844**
29857	ACDEL	**471224**
29857	C-R	100495
29857	C-R	**417349**
298570	ACDEL	**471076**
298571	ACDEL	**471652**
298572	ACDEL	**473231**
298573	ACDEL	**470380**
298574	ACDEL	**472015**
298575	ACDEL	482069N
298576	ACDEL	**472157**
298577	ACDEL	**415196**
29858	ACDEL	40169S
298581	ACDEL	5M89
298584	ACDEL	5M293
298587	ACDEL	5M466

* Minor Width Difference

Mfr. No.	Name	Zero Duplication or Recommended Industrial
298589	ACDEL	5M559
298594	ACDEL	5M867
29859X	MASSE	**417191**
29859X	MASSE	455165!
2986	ACDEL	5877
29860	C-R	100495
29860	C-R	**417349**
298601	ACDEL	1020
298604	ACDEL	2064
298605	ACDEL	6098=
298609	ACDEL	240385
29861	ACDEL	40328
298610	ACDEL	240470
298611	ACDEL	**413248**
298612	ACDEL	450808
298614	ACDEL	453510
298615	ACDEL	3136N
298616	ACDEL	5133
298617	ACDEL	**471141**
29862	ACDEL	40370S
29862	C-R	327995
29862	C-R	4307V
29862	C-R	5273
298620	ACDEL	5971
298626	ACDEL	**471570**
298627	ACDEL	**471264**
298628	ACDEL	**481443**
29863	ACDEL	**474276**
29863	C-R	100495
29863	C-R	476023N
298631	ACDEL	7639S
298632	ACDEL	**417608**
298633	ACDEL	7973S
298636	ACDEL	**417316**
298637	ACDEL	**416865**
298638	ACDEL	40094S
298639	ACDEL	40097S
29864	ACDEL	**472354**
298640	ACDEL	**471765**
298641	ACDEL	**471647**
298642	ACDEL	**471689**
298644	ACDEL	**330385**
298645	ACDEL	40627S=
298649	ACDEL	**471224**
29865	ACDEL	42352S
29865	C-R	100495
29865	C-R	**417349**!
298650	ACDEL	**471267**
298651	ACDEL	**470954**
298652	ACDEL	473414
298653	ACDEL	50081
298654	ACDEL	**473471**
298655	ACDEL	350156
298656	ACDEL	50254=
298657	ACDEL	50289
298658	ACDEL	50327
298659	ACDEL	50462
29866	ACDEL	40410S
29866	C-R	**417349**!*
298660	ACDEL	**470606**
298661	ACDEL	**471276**
298662	ACDEL	**412040**
298663	ACDEL	**474279N**
298664	ACDEL	457585
298665	ACDEL	**417298**
298666	ACDEL	**415116**
298667	ACDEL	**455406**
298668	ACDEL	417498
298669	ACDEL	**415227**
29867	ACDEL	40468
29867	C-R	100495
29867	C-R	476023N
298670	ACDEL	55228=
298671	ACDEL	**415027**
298672	ACDEL	55548
298675	ACDEL	7208S
298678	ACDEL	210914
298679	ACDEL	**417343**
29868	ACDEL	40520S
29868	C-R	3698
298680	ACDEL	**412473**
298681	ACDEL	**415725**
298683	ACDEL	240435
298684	ACDEL	**470530**
298685	ACDEL	**415995**
298687	ACDEL	**417211**
298688	ACDEL	**415437**
298689	ACDEL	**412473**
29869	ACDEL	40555S
29869	C-R	100495
29869	C-R	**417349**
298690	ACDEL	**481537**
298691	ACDEL	**481163**
298692	ACDEL	**473424**
298693	ACDEL	**471750**
298694	ACDEL	**473215**
298695	ACDEL	**473464**
298696	ACDEL	**471192**
298697	ACDEL	**473466**
298698	ACDEL	**470605**
298699	ACDEL	**473448**
2987	ACDEL	**473228**
29870	ACDEL	40568S
29870	C-R	100495
29870	C-R	3698
29870	C-R	476023V!=
298700	ACDEL	**410752**
298701	ACDEL	**412119**
298702	ACDEL	**415001**
298703	ACDEL	**416288**
298704	ACDEL	**415023**
298705	ACDEL	**415302**
298706	ACDEL	**415449**
298707	ACDEL	**417343**
298709	ACDEL	**415379**
29871	C-R	**417349**!
298710	ACDEL	**417357**
298711	ACDEL	415192N
298712	ACDEL	**417247**
298713	ACDEL	**417433**
298714	ACDEL	**415960**
298715	ACDEL	**416071**
298716	ACDEL	**416229**
298717	ACDEL	**416891**
298718	ACDEL	**416921**
298719	ACDEL	**417493**
29872	ACDEL	**471766**
29872	C-R	**417349**!
298720	ACDEL	**417563**
298721	ACDEL	**471137**
298722	ACDEL	**473427**
298723	ACDEL	**473475**
298724	ACDEL	**473425**
298725	ACDEL	450430
298726	ACDEL	450482
298727	ACDEL	450516
298728	ACDEL	**414268**
298729	ACDEL	**450639**
298730	ACDEL	**450765**
298731	ACDEL	**471633**
298732	ACDEL	450803
298733	ACDEL	**470806**
298734	ACDEL	**450819**
298735	ACDEL	450869
298736	ACDEL	**471958**
298737	ACDEL	**471689**
298738	ACDEL	451469
298739	ACDEL	**473016**
29874	ACDEL	41013S
298740	ACDEL	**417520**
298741	ACDEL	**415047**
298742	ACDEL	**415090**
298743	ACDEL	**417602**
298744	ACDEL	**417604**
298746	ACDEL	**417354**
298747	ACDEL	**415187**
298748	ACDEL	**455191**
298749	ACDEL	**417600**
29875	ACDEL	45525S
298750	ACDEL	**417278**
298751	ACDEL	417494
298752	ACDEL	**417549**
298753	ACDEL	**415449**
298754	ACDEL	**418029**
298754	VICK	**330385**!
298755	ACDEL	455820
298757	ACDEL	**471526**
298758	ACDEL	**471554**
298759	ACDEL	**473213**
29876	ACDEL	45637S
298760	ACDEL	**473215**
298761	ACDEL	J712
298762	ACDEL	**417355**
298764	ACDEL	**472409**
298765	ACDEL	**471765**
298766	ACDEL	473468
298767	ACDEL	**471264**
298768	ACDEL	**471267**
298769	ACDEL	**473237**
29877	ACDEL	45825S
29877	C-R	**417350***
298770	ACDEL	**471649**
298771	ACDEL	**471765**
298772	ACDEL	**471835**
298773	ACDEL	**473459**
298774	ACDEL	**472150**
298775	ACDEL	**472258**
298776	ACDEL	45827S
298777	ACDEL	475348N
298778	ACDEL	476023N
298779	ACDEL	**416282**
29878	ACDEL	**470004**
29878	C-R	**417350**!
298780	ACDEL	**417492**
298781	ACDEL	476574N
298782	ACDEL	**417316**
298783	ACDEL	**473473**
298784	ACDEL	**417211**
298785	ACDEL	**471633**
298786	ACDEL	**415867**
298787	ACDEL	**417608**
298788	ACDEL	**473471**
298789	ACDEL	470328
29879	ACDEL	**473415**
29879	C-R	**417350**!
298790	ACDEL	**455406**
298791	ACDEL	**411376**
298792	ACDEL	**415725**
298793	ACDEL	**453279**
298794	ACDEL	**470605**
298795	ACDEL	**474265**
298796	ACDEL	**473442**
298797	ACDEL	451469
298798	ACDEL	**417134**
298799	ACDEL	**417354**
2988	ACDEL	5965
29880	ACDEL	**471103**
29880	C-R	**417350**!
298800	ACDEL	**417549**
298801	ACDEL	**417555**
298802	ACDEL	**470565**
298803	ACDEL	**416125**
298805	ACDEL	**471760**
298806	ACDEL	**473424**
298807	ACDEL	**471647**
298808	ACDEL	472951
298809	ACDEL	**471567**
29881	C-R	**417350**!
298810	ACDEL	**415045**
298811	ACDEL	**415295**
298812	ACDEL	**417278**
298813	ACDEL	**415937**
298814	ACDEL	**417355**
298815	ACDEL	**410825**
298816	ACDEL	**417316**
298817	ACDEL	**471652**
298818	ACDEL	**471526**
298819	ACDEL	**471554**
29882	ACDEL	6863S
29882	C-R	**417350**!
298820	ACDEL	**473213**
298821	ACDEL	**473242**
298822	ACDEL	**417210**
298823	ACDEL	**472354**
298824	ACDEL	**416865**
298825	ACDEL	**415227**
29883	ACDEL	**481163**
29884	ACDEL	470328
29885	ACDEL	**350364**
29885	C-R	**417350**!
29886	C-R	**417350***=
29887	ACDEL	**330385**
29887	C-R	**417350**!
29888	ACDEL	**472354**
29889	ACDEL	**470409**
29889	C-R	**417350**!
298897	ACF	**471821**!
2989	ACDEL	**415437**
29890	ACDEL	353132
29890	C-R	**417350**!
29891	ACDEL	**450765**
29891	C-R	**417350**
298914	ACF	**472636**!
29892	ACDEL	**350435**
29893	ACDEL	50468
29894	ACDEL	**472810**
29894	C-R	**417350**!
29895	ACDEL	**471344**
29896	ACDEL	**471887**
29896	C-R	455509
29897	ACDEL	**471276**
298970	ACF	417267
29898	ACDEL	**470954**
29899	ACDEL	**480889**
29899	C-R	**453182**
298AMM2	C-R	**470530**!
298AW28	C-R	**471341**!
298B124	C-R	**473448**
298B2	C-R	**470530**!
298C2	C-R	**470530**!
298F124	C-R	5711
298FF123-L	C-R	6101
298FF124-L	C-R	**473448**
298HD128	C-R	203034
299-6	ACDEL	370005A
29902	C-R	**415995**!
29906	C-R	**415995**!
29907	C-R	**415995**!

! Industrial Size/Type * Minor Width Difference

= The U.S. customer service number is 877-4-TIMKEN. The Canadian customer service numbers are 800-565-4927 (English) and 800-565-0438 (French-Canadian).

Mfr. No.	Name	Zero Duplication or Recommended Industrial
29908	C-R	415995!
29908	C-R	415995!
29909	C-R	415995!
29910	ACDEL	417506
29910	C-R	415995!
29910	C-R	415995!
29911	ACDEL	417134
29911	C-R	415995!
29911	C-R	415995!
299110	C-R	450147
299116	C-R	450326
29912	ACDEL	370011A
29912	C-R	415995!
29912	C-R	415995=
29912	C-R	415995!=
299120	C-R	450415
299124	C-R	473448
299124M1	C-R	473448
299128	C-R	450084!
299128	FAIRB	450084!
299128M1	C-R	450084!
29913	ACDEL	370012A
29913	C-R	415995!
29913	C-R	415995
299130	C-R	473460
299130	GR-DV	473460
299130	JA-MI	473460
299130	JAE	473460
299130M1	C-R	473460
299131	C-R	50528
299131M1	C-R	50528
29914	ACDEL	417172
29915	ACDEL	370015A
29915	ALLCH	417316!
29916	ACDEL	418028
29916	C-R	415995!
29916	C-R	415995
29917	ACDEL	370019A
29918	ACDEL	370020A
29919	ACDEL	370021A
29919	C-R	415995!
2992	ACDEL	370001A
2992	ACDEL	380001A
2992	C-R	470530!
2992	FAIRB	470530!
2992	GR-DV	470530!
29920	ACDEL	416892
29920	C-R	415995!
29920	C-R	415995
29921	ACDEL	370023A
29921	C-R	415995!
299210L	C-R	471504!
29922	ACDEL	417505
29922	C-R	473466
29922M1	C-R	473466
29923	ACDEL	386025A
29923	ACDEL	416158
29923	C-R	415995!
29924	ACDEL	370026A
29924	C-R	473467
29924M1	C-R	473467
29925	ACDEL	370027A
29925	C-R	415995!*
29925	C-R	415995!
29926	ACDEL	416865
29926	C-R	472234
29926M1	C-R	472234
29927	ACDEL	370029A
29927	C-R	415995!
29928	ACDEL	370030A
29928	C-R	471341!
29928M1	C-R	471341!
29929	ACDEL	415058
29929	C-R	415995!
2992K	CLARK	470530!
2992M1	C-R	470530!
2993	ACDEL	370002A
29930	ACDEL	370033A
29930	C-R	415995!
29931	ACDEL	370034A
29931	JOHND	473214
29932	ACDEL	370036A
29932	ACDEL	370349A
29932	C-R	415995!
29933	ACDEL	370037A
29933	ACDEL	370211A
29933	C-R	415995!
29934	ACDEL	370043A
29935	ACDEL	370046A
29935	C-R	415995!
29935	C-R	415995
29936	ACDEL	370047A
29937	C-R	415995
29937	C-R	415995!
29938	ACDEL	370054A
29938	C-R	415995!
29938	C-R	415995
29939	ACDEL	370057A
2994	ACDEL	370003A
29940	ACDEL	370065A
29940	GARLK	411330!
29940-0133	GARLK	5124
29940-0300	GARLK	5121
29940-0412	GARLK	710005
29940-0415	GARLK	710005
29940-0445	GARLK	3173
29940-0453	GARLK	710046
29940-0458	GARLK	8312
29940-0503	PREC	710091
29940-4177	GARLK	9449
29940-4415	GARLK	710005
29940-4445	GARLK	3173
29940-4453	GARLK	710046
29940-8055	GARLK	411330!
29940-8056	GARLK	477069
299404435	GARLK	472572
29941	ACDEL	417507
29941	C-R	415995
29941	C-R	415995!
29942	ACDEL	370069A
29942	ACDEL	380065A
29943	ACDEL	370106A
29943	C-R	415995!
29943	C-R	415995
29944	ACDEL	370107A
29945	ACDEL	370036A
29945	ACDEL	370338A
29946	ACDEL	370349A
29946	ACDEL	415058
29947	C-R	415995!
29948	ACDEL	376590A
29949	ACDEL	416865
29949	C-R	415995=
299492R1	IH	J825=
299493R91	IH	455282N=
299494R91	IH	455053N=
299495R91	IH	455053N=
2995	ACDEL	370004A
29950	ACDEL	370086A
29950	C-R	415995!
2995000	ACDEL	AR1
2995001	ACDEL	AR2
2995002	ACDEL	AR4
2995003	ACDEL	AR5
2995004	ACDEL	AR6
2995005	ACDEL	AR7
2995006	ACDEL	AR8
2995007	ACDEL	AR10
2995008	ACDEL	AR11
2995009	ACDEL	AR12
2995010	ACDEL	AR20
29951	ACDEL	370094A
29951	C-R	415995!
29952	ACDEL	370121A
29952	C-R	415995*
29952	C-R	415995!
29953	ACDEL	370124A
299539	BR-ST	471733
29956	C-R	45013S
29958	C-R	415995!
29959	C-R	415995!
299594	ACF	481644
2996012	ACDEL	HU031A
2996018	ACDEL	HU057A
2996021	ACDEL	HU065A
2996022	ACDEL	H075
2996028	ACDEL	HU003A
2996029	ACDEL	HU005A
2996030	ACDEL	HU007A
2996031	ACDEL	HU008A
2996032	ACDEL	HU009A
2996033	ACDEL	HU011A
2996034	ACDEL	HU012A
2996035	ACDEL	HU013A
2996036	ACDEL	HU014A
2996037	ACDEL	HU019A
2996038	ACDEL	HU024A
2996039	ACDEL	HU028A
2996041	ACDEL	HU034A
2996042	ACDEL	HU036A
2996043	ACDEL	HU042A
2996044	ACDEL	HU044A
2996045	ACDEL	HU110A
2996047	ACDEL	HU058A
2996048	ACDEL	HU066A
2996049	ACDEL	HU110A
299609	BR-ST	472475
29961	C-R	415995
29962	C-R	45013S
2996200	ACDEL	B299
2996201	ACDEL	B300
2996202	ACDEL	B300
29967	C-R	415995
29968	C-R	45013S
2997	ACDEL	370006A
29970	C-R	415995!
29971	C-R	415995!
29971-80050	GARLK	223843
29971-80050	SUZUK	38X60X10
299713	BUC-E	472157!
299713	BUC-E	472157
29974	C-R	415995!
299747R91	IH	450084!
29975	C-R	415995!
2998	ACDEL	370007A
2998	ALLCH	471689!
2998	TRAC	471689!
29980	C-R	417351!
29980-4465	GARLK	3459
299808038	GARLK	450400
299808062	GARLK	415284
29985	C-R	417351!
29986	C-R	417351!
2999	ACDEL	370008A
29990-0480	GARLK	473241
29996	C-R	417351!
29997	C-R	417351!
299978	ACF	472560N
29998	C-R	417351!
299A2	C-R	470530
299A28	C-R	471341!
299AMM2	C-R	470530!
299B124	C-R	473448*
299B2	C-R	470530!
299BBM24-L	C-R	473467
299C2	C-R	470530!
299CHA-2	C-R	470530!
299F2	C-R	470530!
299F22	C-R	473466
299F24	C-R	473467!
299F28	C-R	471341!
299FF124	C-R	473448*
299FF128	C-R	203034*
299FL2-M1	C-R	470530!
299FL2-M2	C-R	470530!
299FM124	C-R	471984*
299FM2	C-R	470530!
299FM22	C-R	473466
299FM28	C-R	471341!
299G2	C-R	40085S
299H128-T8	C-R	450084!
299H24	C-R	473467
299MA2-L	C-R	470530!
299N2	C-R	470530!
299W120	C-R	450415
299W128	C-R	450084!
299W128-M1	C-R	450084!
299W130	C-R	473460
299W130-M1	C-R	473460
299W2	C-R	470530!
299W2-M1	C-R	470530!
299W212	C-R	470764
299W212	C-R	50764
299W22	C-R	473466
299W22-M1	C-R	473466
299W24	C-R	473467
299W24-M1	C-R	473467
299W26	C-R	472234
299W27	C-R	472234
299W28	C-R	471341!
299WL2-M1	C-R	470530!
29B7159	FORD	472015!
29QJ-2931J	MACK	370021A
29X49219	GWI	471141!
29X50096V	GWI	471466!
29X60497	GWI	50468
29X60725V	GWI	472439
29X60725V	KEN	472439
29X60777	ALLCH	473462
29X60777	GWI	473462
29X60777	IH	473462
29X60777	MACK	473462
29X60981	GWI	417486
2A134	CATER	415066
2A1614	CATER	416738!
2A1614	CATER	450096
2A1983	CATER	415458!
2A3688	CATER	473464
2A3688	CATER	473464!
2A3688	WESTR	473464!
2A3688	WESTR	473464
2A4262	CATER	474281!
2A4547	CATER	450535
2A4547	CATER	471264!
2A4575	CATER	473446
2A5113	CATER	471570!
2A5215	CATER	473225!
2A5285	CATER	471530

! Industrial Size/Type * Minor Width Difference

= The U.S. customer service number is 877-4-TIMKEN. The Canadian customer service numbers are 800-565-4927 (English) and 800-565-0438 (French-Canadian).

Mfr. No.	Name	Zero Duplication or Recommended Industrial
2A6475	ROCKW	417316!
2A939	AU-WS	1873
2B1869	CATER	470950!
2B1869	CATER	6241S
2B2589	CATER	417073
2B3544	CATER	416738!
2B3544	CATER	450096
2B3883	CATER	415263
2B40	WHITE	415458!
2B50	CATER	471570!
2B6005	CATER	415995!
2B6005	WESTR	415995!
2B6040	CATER	476838!
2B6040	WESTR	476838!
2B8836	CATER	476470
2BL-01268	WHITE	45637S
2C108	NOVO	450129
2C108	NOVO	472826!
2C67	WHITE	471466!
2C67P	NATSU	471466!
2D1157	CATER	415137!
2D1157	CATER	418028
2D1521	CATER	471571
2D17341	GMC	50327
2D186	WHITE	470334!
2D191	WHITE	417073
2D2930	CATER	473210
2D300	WHITE	413469!
2D5652	CATER	472397!
2D599	CATER	471688
2D61	WHITE	473458!
2D639	WHITE	413469!
2D640	WHITE	473462
2D757	WHITE	473462
2D8540	CATER	415035!
2D9469	CATER	417316=
2D9870	CATER	471733
2E392520227	IH	471567!
2E3925207	IH	416654!
2EP40M317343	CINMI	410496!
2F3723	CATER	471103!
2F5885	CATER	415085!
2F5885	CATER	456648
2F6678	CATER	471231!
2F6781	CATER	350435
2F6782	CATER	472705!
2F687	MTR-C	J1128
2F7426	CATER	471281!
2F8200	CATER	472185!
2F9538	MURRA	55218=
2F9560	MURRA	415991
2F9560	MURRA	455146!
2F9560	NATEN	415991
2F9560	NATEN	455146!
2F9760	CATER	471762!
2FB138	WHITE	411500
2FT90	OSHKO	415991
2H1663	CATER	471785!
2H1746	CATER	471413
2H2212	CATER	330385!
2H3823	CATER	473462
2H3823	TRACN	473462
2H3824	CATER	415001!
2H3830	CATER	471141!
2H3830	TRACN	471141!
2H3843	CATER	470898
2H3843	TRACN	470898!
2H3844	CATER	473227
2H3846	CATER	472157!
2H3846	CATER	472157
2H3846	TRACN	472157!
2H3846	TRACN	472157
2H3847	CATER	413247!
2H3847	TRACN	413247!
2H3848	CATER	415234!
2H3848	TRACN	415234!
2H3849	CATER	415379
2H3849	CATER	415379!
2H3850	CATER	472016
2H3851	CATER	417191
2H3851	CATER	455165!
2H3853	CATER	455290
2H3910	CATER	473448
2H3910	TRACN	473448
2H3911	CATER	418028
2H3911	CATER	455137!
2H3912	CATER	471391!
2H3912	TRACN	471391!
2H3913	CATER	417073
2H3915	CATER	323138!
2H3917	CATER	471413
2H3918	CATER	410825
2H3919	CATER	471272!
2H4403	LEYLD	471689!
2H4500	LEYLD	1020
2H4659	LEYLD	416664!
2H5021	CATER	471689!
2H6250	CATER	450084!
2H9298	CATER	472354!
2J1307	CATER	416364!
2J1411	CATER	710011
2J1746	CATER	471413
2J2631	CATER	417546!
2J6305	CATER	7184=
2J7426	CATER	415295
2J8333	CATER	471224!
2J8952	CATER	417596
2J9472	CATER	240816
2JG12	KEN	470059
2JG12	KEN	470380!
2JG20	KEN	417316=
2JG39	KEN	416654
2JG41	KEN	417484!
2K1382	CATER	456890
2K1382	TRACN	456890
2K1383	CATER	417254
2K1383	TRACN	417254
2K1384	TRACN	416865!
2K3881	CATER	471267!
2K4816	CATER	471529
2K6983	CATER	450307
2K7140	LEYLD	1110
2K8047	CATER	416921!
2K9059	CATER	416476!
2K9150	CATER	417316
2L1016	HU-WR	417546!
2L1047	HU-WR	417357
2L1047	HU-WR	455192!
2L1392	HU-WR	417357
2L8635	CATER	471281!
2LA-0662	WHITE	471554!
2LG6700	FORD	350936
2M482	FMC	415449!
2M5965	CATER	416624
2M7316	CATER	471466!
2M7316	FI-AL	471466!
2M8216	CATER	474281!
2M8675	CATER	471649!
2N4251	FORD	417316!
2N4251X	FORD	417316!
2P3857	CATER	J1880*=
2P3858	CATER	J1825
2P3859	CATER	J1780
2P8423	CATER	471138!
2PS396	C-P	472572!
2QA6700	FORD	350936
2R0299	CATER	415379
2R2677	CATER	472185!
2R299	CATER	415379
2R312	MOHWK	3591
2R759	CATER	471554
2R7647	CATER	415369H=
2R7648	CATER	417487=
2R8416	CATER	415389=
2S1076	CATER	472636!
2S2077	CATER	471195!
2S2078	CATER	470565=
2S2376	CATER	471504!
2S2680	CATER	415995!
2S5867	CATER	470625
2SB155	WHITE	473228
2SB415	WHITE	415001!
2SD46	WHITE	481864
2SD62	WHITE	472924!
2SPC22A	NOVO	471689!
2T0340	JNSON	J1105
2T340	CATER	J1105
2UU-069	WHITE	473179
2UU-0962	WHITE	473179
2UU0621	WHITE	471689!
2UUA-0962	WHITE	471192
2UV-0962	WHITE	473179
2UV0662	WHITE	471689!
2V9405	CATER	3276*=
2W1733	CATER	39887
2W1734	CATER	39888
2XE446	PARGN	471570!
2XE446A	PARGN	472924!
3-002403	CALI	415234!
3-014300	CALI	470354
3-037500	CALI	415034!
3-055600	CALI	455536
3-056600	CALI	417433
3-056800	CALI	415036
3-056802	CALI	415036
3-057000	CALI	416892!
3-057800	CALI	7354N
3-066600	CALI	412943
3-066800	CALI	416008
3-067000	CALI	416107!
3-067000	CALI	455073
3-075100	CALI	415294!
3-228	TW-CO	417507
3-228	TW-CO	417507!
3-4-783	SPICE	472397!
3-SPC22	NOVO	474264
3-Y393	KEN	471141!
3-Y569	KEN	472409!
300	UNIVE	417487
300-463-1	SPICE	711552
30000	C-R	417351!
300004	CURTS	471224!
300007	H-S	450593!
30001	C-R	417351!
30003	JN-MN	730004
300064	CATER	J1141
300064	TMTR	J1141
300066	CATER	473232!
300066	TMTR	473232!
300067	CATER	473224!
30006767	GMC	1188
30006767	GMC	4904
30007	C-R	100495
30007	C-R	4810V!
3000770	HYST	473237!
300078	O-M	481443!
300079	CURTS	472179
30008139	ALLCH	45013S
300087	CURTS	472258!
30009	JN-MN	733067
30009	SPG	471466!
3000975	CUMMI	472409
3000976	CUMMI	50569
3000977	CUMMI	39705
30010	C-R	417351!
30011	C-R	417351!
300111	C-W	471612
300111	CURTS	471612
3001138	CUMMI	39701
300124	C-R	471984
300124M1	C-R	471984
300128	C-R	473239
300128M1	C-R	473239
300130	C-R	472394
300130	GR-DV	472394
300130M1	C-R	472394
30013272	GMC	710394
300137	CURTS	472397!
30014404	TROS	471981
300145	CURTS	470806
30015	C-R	7338N
300151R92	IH	415035=
30015206	TROS	7044NA
30015608	TROS	473239
300160	CURTS	471224!
30016005	TROS	472394
30016008	TROS	472394
30016010	TROS	472394
3001771	CUMMI	5223
3001772	CUMMI	39823
300178	CURTS	473214!
30018130	GMC	710394
300186	CURTS	470625!
300194	CURTS	471413!
3002	ALLCH	472397!
3002	BUC-E	472397!
3002	C-R	472397!
3002	CABOT	472397!
30020004	TROS	472397!
30020006	TROS	472397!
30020008	TROS	472397!
30020405	TROS	6954S
300207BGO	SPG	300207
30020805C	TROS	8430S
30020808	TROS	472015!
30020936	GMC	710522
300210BG3	SPG	300210
30021203.5	TROS	9195S=
30021607	TROS	471272!
30021608	TROS	471272!
30022	C-R	472012
30022004	TROS	442874
30022106.5	TROS	3945
300221X06.5	TROS	3945
300221X06.5C	TROS	3945
300228	CURTS	471958
30022M1	C-R	472012
30023	C-R	417487
300230	GR-DV	416654!
30023204	TROS	40555
30023204	TROS	40555S!
3002356	CUMMI	39827
300235601	CUMMI	39827
30023667	GMC	710522
30024	C-R	472015!
30024	CABOT	472015!
30024	GEHL	472015!
3002400	CALI	415234!

! Industrial Size/Type * Minor Width Difference

= The U.S. customer service number is 877-4-TIMKEN. The Canadian customer service numbers are 800-565-4927 (English) and 800-565-0438 (French-Canadian).

Mfr. No.	Name	Zero Duplication or Recommended Industrial
300244	C-W	412861
300244	CURTS	412861
30024B63	CABOT	472015!
30024M1	C-R	472015!
30025	C-R	417487
30026	C-R	472018
300269	CURTS	455019!
30026M1	C-R	472018*
30026Q6	C-R	472018*
30027	C-R	417487!
30027	C-R	417487
30027	MALL	471224!
30027	SPG	471554!
30028	C-R	471272!
300285	CURTS	473228!
30028M1	C-R	471272!
3002M1	C-R	472397!
30031	C-R	417487
30031	C-R	417487!
300319	CURTS	471744!
3003239	CUMMI	JX1158=
3003272	HYST	442507
30033	C-R	417487
3003353	CUMMI	39713
3003353	HYST	40566S
300343	CURTS	473197
30035	C-R	417487!
30035	C-R	417487
3003572	HYST	40433S
30036	C-R	417487
30037	C-R	417487
3003862	HYST	493524
300387	UNIVE	417350!
3003877	CUMMI	39705
3003878	CUMMI	39701
300388	MICH	417350!
3004	LABEQ	473454
30040	C-R	417487
300400	CURTS	471424!
300400	MICH	415995!
300400	UNIVE	415995!
300412	UNIVE	417351!
300413	MICH	417351!
300424	UNIVE	417487
300425	MICH	417487
3004256	HYST	413247!
3004257	HYST	451160N=
3004302	HYST	474254
3004303	HYST	473439
3004306	HYST	40438S
3004307	HYST	471765!
3004316	CUMMI	472409
3004316	CUSH	472409
3004317	CUMMI	415937
300437	UNIVE	417488!
300438	MICH	417488!
3004546	HYST	447793
3004548	HYST	J1141
3004726	HYST	416557
3004731	HYST	415458!
3004786	HYST	474272
3004787	HYST	415389
3004790	HYST	471272!
3004795	HYST	325940=
30049	C-R	417487*
30049	C-R	417487
300491	CURTS	471760
3004985	HYST	472157
300499	UNIVE	455019!*
300500	MICH	455019!
3005041	GWI	412871!
30055	C-R	417487!*
30055	C-R	417487
30055	SPG	473215!
3005592	HYST	227550
30057	C-R	417487!
3005885	CUMMI	39715
3005887	CUMMI	39815
3005887	CUMMI	5223
30059	SPG	470380!
3005OS	JN-MN	416921!
30060	C-R	415962*
30060	GARLK	471442!
30061	ALLCH	417171!
30061	C-R	417487
3006236	CUMMI	99437
3006237	CUMMI	99601
30064	C-R	415962
3006557	CUMMI	99210
30066	SPG	473367
3006642	GWI	471141!
30067	C-R	417488!
30067	SPG	473228!
3006736	CUMMI	415937
3006737	CUMMI	39807
3006738	CUMMI	39823
3006739	CUMMI	39723
3006740	CUMMI	99399
3006741	CUMMI	99475
3006742	CUMMI	99362
3006743	CUMMI	99599
3006744	CUMMI	99372
30068	C-R	417488!
30069	SPG	473232!
30070	C-R	417488!
30070	SPG	472185!
30071021	ALLCH	415449!
30071609	ALLCH	472924!
30072	GARLK	471526!
30073886	ALLCH	473460
3007466	GWI	473215!
3007497	ALLCH	415498
30074975	ALLCH	415498
3007498	ALLCH	450143
30076	C-R	417488!*
30077	GWI	450065
3007723	ALLCH	450313
30078	C-R	417488!
30081	GARLK	471472!
30083	C-R	415088
30083S	SPG	472924!
30084	C-R	415088
300845C91	IH	3894V
30085	SPG	470530!
3008506LPD	JN-MN	417488!
30087	C-R	415088
30087	C-R	415088!
30089	C-R	415088
30089	C-R	415088!
30090	C-R	415088
300916	WHITE	472636!
30095	C-R	415088*
30096	C-R	415088
30096	C-R	415088!
3009625	CUMMI	470954
30097	C-R	415088!
30097	C-R	415088
30098	C-R	415088*
30099	SPG	411253!
300A15604	TROS	450084!
300A15607.75	TROS	450084!
300A15608	TROS	450084!
300A15610	TROS	450084!
300A15610.5	TROS	450084!
300A16008	TROS	473460
300A2	C-R	470530!
300A20006	TROS	470530!
300A20008	TROS	470530!
300A20010.5	TROS	470530!
300A20012	TROS	470530!
300A20808	TROS	473467
300A20812	TROS	473467!
300A21208	TROS	472234
300A21607	TROS	471341!
300A21608	TROS	471341!
300A21612	TROS	471341!
300AM2	C-R	470530!
300B130	C-R	472394
300B15606	TROS	6547
300C14708	TROS	6818
300F28	C-R	471272!
300FM124	C-R	471984*
300FM28	C-R	471272!
300G126	C-R	40555
300G126	C-R	40555S!
300G2	C-R	40301S
300G28	C-R	40520S
300HM216	C-R	40555
300HM216	C-R	40555S!
300N130	C-R	472394
300N24	C-R	472015!*
300RC	SUL	416107!
300RC	SUL	455073
300W120	C-R	414268!
300W124	C-R	471984
300W124-M1	C-R	471984
300W128	C-R	473239
300W128-M1	C-R	473239
300W130	C-R	472394
300W130-M1	C-R	472394
300W2	C-R	472397!
300W2-M1	C-R	472397!
300W22-M1	C-R	472012
300W24-M1	C-R	472015!
300WL130-M1	C-R	472394
300WL24-M1	C-R	472015!
301-SA477	B-L-H	55228=
301-SA799	B-L-H	455008
30100	C-R	415088
301013	CATER	472164!
301013	TMTR	472164!
301014R91	IH	470506!
30101695	ALLCH	416556!
30101695	ALLCH	472157
301017	CATER	J1130
301017	TMTR	J1130
30101N	SPG	412119
30102	JOHND	472354!
301028R91	IH	416404!
301032R91	IH	416664!
3010457	CUMMI	417621
3010459	CUMMI	39837
3010462	CUMMI	39817
3010463	CUMMI	39817
3010464	CUMMI	99311
3010465	CUMMI	99367
30108	C-R	200133
3010945	CUMMI	314259!
30110PN3006	ACURA	427RR
30112	C-R	55548
30113	C-R	455820
30116	C-R	455019!*
30117	C-R	455019!*
301177C91	IH	417484!
301181	HYST	470954!
30121	GEM	480210!
301210	CLARK	417267
301211	CLARK	45827S
30123	C-R	455019!*
301234C	OLIVE	471224!
301234E	MINNM	471224!
301234E	OLIVE	471224!
30125	C-R	455019!*
301257	CLARK	418029!
30128	SPICE	50402
3012898	GWI	416476!
30129	C-R	455019!
30130	C-R	455019!
301317	WHITE	418028
301317	WHITE	455137!
30131718	ALLCH	415960
301331R91	IH	352541
301332R91	IH	352541
301333R91	IH	352541
3013347	CUMMI	944379
301334R91	IH	472179
301335R91	IH	470712!
30135	SPG	471192
301351	CLARK	473227
301352	CLARK	471649!
30140	C-R	712000
3014302	CALI	470354
30143796	ALLCH	416282
30144	C-R	3592
30144349	ALLCH	415725!
30145	C-R	100263
30145	C-R	3905
30147	C-R	710008
30148	C-R	710008
301487	O-M	471264!
301495	AMC	240009
30150	MICH	471571
30153	C-R	100263
30153	C-R	4562V
301532R1	IH	472164!
301532R91	IH	472164!
301569C91	IH	416500
30162	MICH	471647
30162	UNIVE	471647
30163	SPG	471766!
3016660	CUMMI	36384
3016788	CUMMI	470898
3016789	CUMMI	470898
3016792	CUMMI	39849
3016793	CUMMI	39701
3016794	CUMMI	473517
30168	UNIVE	50419*
3016S	SPG	3016
30170344	ALLCH	415991
30170344	ALLCH	455146!
30173	SPICE	40185
301732	SPICE	40185
301733	SPICE	40185
30175	MICH	472951
30175	MICH	474252
30175	UNIVE	472951
30175	UNIVE	474252
30182	UNIVE	450039
30183	MICH	450339
30183N	SPG	472179
30184345	ALLCH	415379
30184345	ALLCH	415379!
3018584	B-L-H	415551
301917	O-M	427RR
301923R91	IH	415991
301923R91	IH	415991!
3019600	CUMMI	39867
30199	WAYNE	470409!

! Industrial Size/Type * Minor Width Difference

= The U.S. customer service number is 877-4-TIMKEN. The Canadian customer service numbers are 800-565-4927 (English) and 800-565-0438 (French-Canadian).

Mfr. No.	Name	Zero Duplication or Recommended Industrial
30199	*WAYNE*	50409
301991	*O-M*	340787
301B2	*C-R*	**472397**!
301B24	*C-R*	**472015**!
301SA162	*B-L-H*	**415116**
301SA175	*B-L-H*	**417562**
301SA175	*CLARK*	**417562**
301SA262	*B-L-H*	**416865**!
301SA347	*B-L-H*	**417210**!
301SA485	*B-L-H*	340413
301SA521	*B-L-H*	**415995**!
301SA522	*B-L-H*	**416239**!
301SA522	*CLARK*	**416239**!
301SA650	*B-L-H*	**455019**!
301SA822	*B-L-H*	J1136
301SB162	*B-L-H*	**417602**!
301SB175	*B-L-H*	**416891**!
301SB175	*CLARK*	**416891**!
301SB262	*B-L-H*	**476470**
301SB347	*B-L-H*	**417567**
301SB347	*CLARK*	**417567**
301SB477	*B-L-H*	**472924**!
301SB485	*B-L-H*	340927
301SB485	*CLARK*	340927
301SC162	*B-L-H*	**417158**!
301SC175	*B-L-H*	**415027**
301SC175	*B-L-H*	**415027**!
301SC175	*CLARK*	**415027**
301SC175	*CLARK*	**415027**!
301SC262	*B-L-H*	**415867**
301SC347	*B-L-H*	**471766**!
301SC477	*B-L-H*	**415023**
301SC485	*B-L-H*	340787
301SC485	*CLARK*	340787
301SC522	*B-L-H*	**415187**
301SC541	*B-L-H*	**416288**!
301SC983	*CLARK*	**415725**!
301SD162	*B-L-H*	**455576**!
301SD162	*CLARK*	**455576**!
301SD175	*B-L-H*	**416345**!
301SD175	*B-L-H*	455033
301SD175	*CLARK*	**416345**!
301SD175	*CLARK*	455033
301SD262	*B-L-H*	**415938**
301SD347	*B-L-H*	**416339**
301SD347	*B-L-H*	455031!
301SD477	*B-L-H*	**471646**!
301SD485	*B-L-H*	340356
301SD485	*CLARK*	340356
301SE175	*B-L-H*	**415116**
301SE262	*B-L-H*	**415551**
301SE347	*B-L-H*	**417556**
301SE347	*CLARK*	**417556**
301SE477	*B-L-H*	55030
301SE522	*B-L-H*	**472185**!
301SF175	*B-L-H*	**417020**
301SF262	*B-L-H*	**415072**
301SF347	*B-L-H*	**470605**!
301SF347	*CLARK*	**470605**!
301SF477	*B-L-H*	**455462**
301SF522	*B-L-H*	**415482**
301SF541	*B-L-H*	**415991**
301SF541	*B-L-H*	**415991**!
301SF650	*B-L-H*	**416892**!
301SH175	*B-L-H*	**415001**!
301SH262	*B-L-H*	55242
301SH347	*B-L-H*	**415007**
301SH347	*CLARK*	**415007**
301SH477	*B-L-H*	**415036**
301SH522	*CLARK*	**455330**!
301SH650	*B-L-H*	417543
301SJ175	*B-L-H*	**472157**!
301SJ175	*B-L-H*	**472157**
301SJ175	*CLARK*	**472157**
301SJ175	*CLARK*	**472157**!
301SJ262	*B-L-H*	**415645**!
301SJ262	*B-L-H*	455104
301SJ347	*B-L-H*	**416077**
301SJ347	*CLARK*	**416077**
301SJ477	*B-L-H*	**471647**
301SJ522	*CLARK*	55239=
301SJ650	*B-L-H*	**417606**
301SK175	*B-L-H*	**416364**!
301SK175	*CLARK*	**416364**!
301SK262	*B-L-H*	**455584**
301SK347	*B-L-H*	**415991**
301SK347	*B-L-H*	455146!
301SK347	*CLARK*	**415991**
301SK347	*CLARK*	455146!
301SK477	*B-L-H*	**417512**
301SK522	*B-L-H*	**417601**
301SK522	*CLARK*	**417601**
301SK650	*B-L-H*	**416476**!
301SK650	*CLARK*	**416476**!
301SL162	*B-L-H*	**417600**
301SL175	*B-L-H*	**416229**
301SL175	*CLARK*	**416229**
301SL262	*B-L-H*	**416125**!
301SL262	*CLARK*	**416125**!
301SL347	*B-L-H*	**473460**
301SL477	*B-L-H*	**471413**
301SL522	*B-L-H*	**417549**!
301SM175	*B-L-H*	**415124**
301SM175	*CLARK*	**415124**
301SM262	*B-L-H*	**412473**!
301SM347	*B-L-H*	**417596**
301SM477	*B-L-H*	**471424**!
301SM522	*CLARK*	**417605**
301SM650	*B-L-H*	**417196**!
301SN175	*B-L-H*	**473228**
301SN262	*B-L-H*	**412119**!
301SN477	*B-L-H*	457585
301SN522	*CLARK*	**417191**
301SN522	*CLARK*	456585
301SO522	*B-L-H*	**415187**
301SP175	*B-L-H*	**416888**!
301SP175	*CLARK*	**416888**!
301SP262	*B-L-H*	**415196**!
301SP262	*CLARK*	**415196**!
301SP347	*B-L-H*	**472144**!
301SP347	*CLARK*	**472144**!
301SP650	*CLARK*	**415991**
301SP650	*CLARK*	455146!
301SR162	*B-L-H*	**416654**!
301SR175	*B-L-H*	**415090**
301SR175	*CLARK*	**415090**
301SR262	*B-L-H*	**472560N**!
301SR347	*B-L-H*	**473225**!
301SR477	*B-L-H*	**473313**
301SR522	*B-L-H*	**415995**!
301SS162	*B-L-H*	**416332**!
301SS175	*B-L-H*	**415437**
301SS175	*B-L-H*	**415437**!
301SS262	*B-L-H*	**416107**!
301SS262	*B-L-H*	455073
301SS262	*CLARK*	**416107**!
301SS262	*CLARK*	455073
301SS347	*B-L-H*	**416892**!
301SS477	*B-L-H*	**415449**!
301SS522	*B-L-H*	**415077**
301ST175	*B-L-H*	**415379**!
301ST175	*B-L-H*	**415379**
301ST262	*B-L-H*	**417273**
301ST347	*B-L-H*	**473238**
301ST477	*B-L-H*	**417538**
301ST477	*CLARK*	**417538**
301ST522	*CLARK*	55333=
301SU162	*B-L-H*	**416666**
301SU175	*B-L-H*	**415960**!
301SU262	*B-L-H*	**471341**!
301SU347	*B-L-H*	55268
301SU347	*CLARK*	55268
301SU477	*B-L-H*	**417492**
301SU522	*B-L-H*	**417298**
301SU650	*B-L-H*	**473444**
301W126	*C-R*	7044NA
301Z128	*C-R*	**473239**
301Z2	*C-R*	**472397**!
302	*UNIVE*	**417171**!
302002426	*WHITE*	**472164**!
302002442	*WHITE*	**473237**!
302002698	*WHITE*	**472164**!
30201	*GARLK*	**471466**!
302012	*CLARK*	**471442**!
3020182	*CUMMI*	39705
3020183	*CUMMI*	**415937**
3020184	*CUMMI*	39723
3020185	*CUMMI*	**472409**
3020187	*CUMMI*	**472409**
3020188	*CUMMI*	50569
3020190	*CUMMI*	50568
3020191	*CUMMI*	39723
3020546	*CUMMI*	**417621**
3020547	*CUMMI*	39817
30208	*CHERY*	**471765**!
302088	*CLARK*	**471413**
30210538	*ALLCH*	**471224**!
30210652	*ALLCH*	**417344**=
30213	*GARLK*	**471264**!
3022	*PEERC*	**472705**!
3022043	*ALLCH*	**415960**
302232R91	*IH*	**472560N**
302238	*CLARK*	**471192**
30225	*GARLK*	**471255**!
302292E	*OLIVE*	**471692**!
302293E	*OLIVE*	**473231**!
3022OS	*JN-MN*	**471255**!
30237	*GARLK*	**471564**
3023867	*CUMMI*	39825
302386701	*CUMMI*	39825
3023OS	*JN-MN*	**471762**!
302412	*UNIVE*	55155=
302413	*MICH*	55155=
302425	*MICH*	455015
302425	*UNIVE*	455015
302459R91	*IH*	**471224**!
30246201	*ALLCH*	**412119**
30246458	*ALLCH*	**472439**
30246540	*ALLCH*	**417967**!
30246920	*ALLCH*	**473238**
30247290	*ALLCH*	**455330**!
302495	*O-M*	**471264**!
3024OS	*JN-MN*	**471763***
302500	*MICH*	455020
302564	*O-M*	**481443**!
3025OS	*JN-MN*	**471766**!
3026	*CLIN*	**254287**
302640	*CLARK*	**411376**!
3026OS	*JN-MN*	**473212**!
3027675	*CUMMI*	39877
3027680	*CUMMI*	39879
30277	*SPICE*	6808N
30277099	*ALLCH*	**417316**=
3027OS	*JN-MN*	**473010**
3028	*NATL*	**473179**
302825E	*OLIVE*	**471554**!
30283	*PEERC*	**473016**!
30283	*SPG*	**473179**!
302837	*PEERC*	**472179**
3028697	*ALLCH*	**410308**
30286975	*ALLCH*	**410308**
30287403	*ALLCH*	**471224**!
3028OS	*JN-MN*	**473444**
302912R91	*IH*	**415437**!
302913R91	*IH*	455040N=
302957	*GWI*	**323138**!
3029OS	*JN-MN*	**472572**!
302G128	*C-R*	6547
302G22	*C-R*	6954S
30300S	*SPG*	**472394**
30301	*SPG*	**472397**!
303026477	*WHITE*	**416229**
303067785	*WHITE*	**416404**!
303076520	*WHITE*	**472179**
303078124	*WHITE*	**472439**
30308	*NATL*	**410308**
3030OS	*JN-MN*	**473236**!
303104478	*WHITE*	**417357**
303113221	*WHITE*	240733
303119351	*WHITE*	**471652**!
303119351	*WHITE*	**471652**
303131173	*WHITE*	**471272**
303134008	*WHITE*	**417254**
3031445	*CUMMI*	39867
3031446	*CUMMI*	39875
30318	*STN-S*	**470954**
303189	*REX*	**470625**!
3031A	*DURA*	**471231**!
3031AA	*DURA*	**473236**!
3031BB	*DURA*	**471267**!
3031D	*DURA*	**450039**
3031F	*DURA*	**471649**!
3031J	*DURA*	**476838**!
3031K	*CASE*	**471763**
3031K	*DURA*	**471765**!
3031N	*DURA*	**471766**!
3031T	*CASE*	**473010**
3031T	*DURA*	**473234**
3031W	*CASE*	**472185**!
3031W	*DURA*	40071S
3031WA	*OSHKO*	**415960**
3031Z	*DURA*	**473016**!
3032012	*CUMMI*	37586
3032013	*CUMMI*	37586
303217C91	*IH*	40185
303223795	*WHITE*	**472636**!
303228738	*WHITE*	**415960**
303228746	*WHITE*	**471138**!
303239	*CONTI*	**470625**!
303251	*REX*	**417210**!
303262	*REX*	**473237**!
303283844	*WHITE*	**471224**!
303291251	*WHITE*	443527*=
303291278	*WHITE*	**471272**
3032SR	*OSHKO*	**473215**!
303302466	*WHITE*	**417344**=
303331849	*WHITE*	**471272**=
303341186	*WHITE*	**415085**!
303349691	*WHITE*	**415559**
303353C91	*IH*	**473243**
303359425	*WHITE*	**417509**
303360	*O-M*	420
30338461	*ALLCH*	**471442**!
30341	*CHERY*	**415001**!
303420280	*WHITE*	476389=
30346	*CHERY*	**471785**!
30348	*SPICE*	40316S
30348536	*ALLCH*	**471224**!

! Industrial Size/Type * Minor Width Difference

= The U.S. customer service number is 877-4-TIMKEN. The Canadian customer service numbers are 800-565-4927 (English) and 800-565-0438 (French-Canadian).

Mfr. No.	Name	Zero Duplication or Recommended Industrial
30348833	*ALLCH*	**470530**
30349583	*ALLCH*	**415984**!
30349591	*ALLCH*	**412119**!
30350	*C-R*	55276=
30350839	*ALLCH*	**472636**
30350847	*ALLCH*	415104N=
30352S	*SPG*	**472164**!
30359	*SPG*	**473448**
3036	*C-R*	8X14X4!
3036	*C-R*	8X14X5!*
30360	*C-R*	355669
30360	*CHERY*	**471750**!
303600686	*REX*	**473179**!
30367	*SPICE*	7245
30367	*VIC*	7245
303723R91	*IH*	**415458**=
30373TA	*TRSCM*	**417349**
30373VTB	*TRSCM*	476023N
30374TA	*TRSCM*	**417349**!
30376107	*ALLCH*	**471649**!
30377444	*ALLCH*	**471692**=
30378	*WHITE*	5951
303783	*WHITE*	5951
30379	*VERSA*	370119A
3037969	*ALLCH*	**417487**!
3037969	*ALLCH*	**417487**
30379812	*ALLCH*	**471272**
30379903	*ALLCH*	**473238**=
3037T2	*WHITE*	240733
30386759	*ALLCH*	**473231**!
30389	*SPG*	**472492**!
3038997	*CUMMI*	**471795**=
3038998	*CUMMI*	472758V
3038999	*CUMMI*	**471267**
3038D	*GOODM*	**415379**
3038D	*GOODM*	**415379**!
3039	*PEERC*	450033
30394	*SPG*	**473227**!
303HS210-L	*C-R*	5585
303VB7	*MARI*	**415995**!
304	*UNIVE*	**418028**
304	*UNIVE*	455137!
30400543	*ALLCH*	**470565**!
3040062	*ALLCH*	**415327**
30400626	*ALLCH*	**415327**
30401194	*ALLCH*	**415551**
304026	*JA-MI*	**417316**!
304026	*JAE*	**417316**!
30402VH	*TRSCM*	45013S
30404	*STAR*	J1106
304046	*PEERC*	**471765**!
30404SA	*TRSCM*	**415995**
30404TA	*TRSCM*	**415995**!
3040805M1	*MASSE*	**417349**!
30409239	*ALLCH*	**471341**!
3040D	*GOODM*	**416339**
3040D	*GOODM*	455031!
3040F	*GOODM*	**416339**
3040F	*GOODM*	455031!
30413	*GWI*	**471750**!
30414	*GWI*	**471747**!
30420007	*TROS*	**473463**
30420408	*TROS*	**450307**
30420808	*TROS*	**410308**!
30420811	*TROS*	**410308**
30420812	*TROS*	**410308**!
30421208	*TROS*	**473471**
30421607	*TROS*	**473473**
30421608	*TROS*	**473473**
30424SA	*TRSCM*	**417487**!
30427	*GARLK*	**470954**!
3042826	*ALLCH*	8907
30431100	*ALLCH*	**417967**!
30350	*ALLCH*	**470954**
3044	*C-R*	340826
304400	*MICH*	**416404**!
304400	*UNIVE*	**416404**!*
304412	*UNIVE*	**417621**!
304413	*MICH*	**417621**!
304418C91	*IH*	3016
304418C91	*IH*	456052
304424	*UNIVE*	**416288**!
304425	*MICH*	**416288**!
304437	*UNIVE*	**417171**!
304438	*MICH*	**417171**!
30444095	*ALLCH*	**471224**!
304445	*GWI*	5711
304446	*EATON*	370119A
304450	*GWI*	**415991**
304450	*GWI*	455146!
304450	*UNIVE*	**417172***
304451	*GWI*	**416167**!
304452	*GWI*	**470954**
30446	*GARLK*	**471554**!
30448	*GARLK*	**471643**!
304499	*UNIVE*	**415021***
304500	*MICH*	**415021**
3045043	*ALLCH*	45187S
3045101	*IG-RA*	**415995**!
304525	*MICH*	**415394***
30454SA	*TRSCM*	**415088**!
30454TA	*TRSCM*	**415088**
30458	*GARLK*	**471567**!
3046311	*SPICE*	**471272**!
304632	*SPICE*	**473214**
304632C91	*IH*	**472705**!
304633	*SPICE*	**471272**!
304634	*SPICE*	**471466**!
304636	*SPICE*	**470954**
304636-2	*SPICE*	**470954**!
304637	*SPICE*	**471272**!
304638	*SPICE*	8421S
30468	*CHERY*	**411253**!
3047201	*CALI*	**455330**!
3047209R1	*NAVST*	420
304720R1	*NAVST*	420
304736	*JAC*	450398
304736	*JAC*	**471267**!
3047402	*CALI*	**415577**
30477	*NAPCO*	**473228**!
3047701	*CALI*	**415295**
3047900	*CALI*	**415960**!
3047901	*CALI*	**415960**!
304816C91	*IH*	**416921**!
304831R91	*IH*	**323138**!
304832R91	*IH*	**323138**!
30487342	*ALLCH*	**417316**=
30488	*GARLK*	**471643**!
30488357	*ALLCH*	**410737**!
3048ALA83	*IH*	**471192**
3048P-ALA-100	*IH*	**470954**!
3048P-ALA-63	*IH*	**472164**!
3049464	*CUMMI*	39869
3049467	*CUMMI*	39865
3049468	*CUMMI*	39861
3049485	*GM*	35342
304967	*WHITE*	5751
304981	*JAC*	**471652**
304986	*WHITE*	**473215**!
304B23109	*TROS*	5957S
304N2	*WHITE*	**473462**
304VB7	*MARI*	**417487**
3050	*C-R*	240698
3050TA	*OSHKO*	5751
3051	*FMS*	3051N
3051	*PEERC*	450129
3051	*PEERC*	**472826**!
305110	*O-M*	**474278**!
305110	*O-M*	6859S
305115	*JAC*	450557
305115	*JAC*	**471255**!
3051237	*ALLCH*	**415991**
3051237	*ALLCH*	**415991**!
305128R91	*IH*	**471570**!
305132-C92	*IH*	HU028A
305133-C1	*IH*	730001
305149	*O-M*	**481443**!
30519	*SPG*	**471271**!
305207A	*HARWA*	30X52X7
305268	*GWI*	**254287**
305269	*WHITE*	**416288**
30531	*DIVCO*	6547
305366	*GWI*	**416476**!
305387-C1	*IH*	**415072**
305439	*JAC*	**481073**
30544	*PEERC*	**417604**
3054HCR	*SPG*	**417360**
30550	*C-R*	55155=
30551	*C-R*	55155=
3056401	*CALI*	**415219**
3056501	*CALI*	**416154**!
30565360	*ALLCH*	2505
3056803	*CALI*	**415036**
3057	*PEERC*	**471137**
30571	*C-R*	55155=
30574	*CASE*	40494S
305834	*GWI*	**472409**!
305845	*GWI*	**416865**!
30585	*PEERC*	**418028**
30585	*PEERC*	455137!
305902	*GWI*	**472439**
30591	*C-R*	455734=
30592	*C-R*	455734=
305925	*AMC*	9613S
305926	*GWI*	**472157**!
305926	*GWI*	**472157**
305FF28	*C-R*	**473473**
305FM24	*C-R*	**410308**!*
305M215-L	*C-R*	350942
305VB7	*MARI*	**415023**
306	*UNIVE*	**417354**!
3060	*C-R*	240698
306120	*C-R*	450335
306122	*BUC-E*	470086
306122	*C-R*	470086
306124	*C-R*	**473313**
306124	*HU-WR*	**473313**
306124M1	*C-R*	**473313**
306128	*C-R*	**473457**!
306128M1	*C-R*	**473457**!
306130	*BUC-E*	**473461**!
306130	*C-R*	**473461**!
306130M1	*C-R*	**473461**!
3061H	*SPG*	3061H
3061HC	*SPG*	3061H
3061VG0	*SPG*	3061V
3062	*BUC-E*	**473463**
3062	*C-R*	**473463**
306212	*C-R*	**473474**
306212M1	*C-R*	**473474**
30622	*C-R*	**450307**
30622M1	*C-R*	**450307**
30624	*C-R*	**410308**!
30624M1	*C-R*	**410308**!
30628	*C-R*	**473473***
30628K	*CLARK*	**473473**
30628M1	*C-R*	**473473***
3062900	*CALI*	**416167**!
3062M1	*C-R*	**473463**
3063	*SNFLW*	204035
306335R91	*IH*	**470625**!
306336R91	*IH*	**470625**!
306346R91	*IH*	441130
306392	*Y-T*	**473467**!
306424	*UNIVE*	**456105**
306425	*MICH*	**456105**
306437	*UNIVE*	417490
306438	*MICH*	417490
306449	*UNIVE*	**455336***
306450	*MICH*	**455336***
30648	*C-R*	55141
306500	*MICH*	455022
30652	*C-R*	55141
30653	*C-R*	**415088**!
30653	*C-R*	**415088**
3066	*PEERC*	**450039**
30662	*SPICE*	**417480**!
30666S	*SPG*	**450666**
3067100	*CALI*	55103S
306711	*AMC*	**471504**!
30678	*GARLK*	**471267**!
3067OS	*JN-MN*	**474264**
306804	*AMC*	**473211**!
30684	*AMC*	**471255**!
30684	*GMC*	**471267**!
30687	*GARLK*	**471570**!
3068800	*CALI*	416008
30693	*C-R*	455020
306994	*AMC*	42763
306AHS28-L	*C-R*	**473473**
306FF22	*C-R*	**450307**
306FF28	*C-R*	**473473***
306FF2L	*C-R*	5113
306FF2L	*C-R*	7721!
306J	*OSHKO*	**472185**!
306LC22-M1	*C-R*	**450307**
306N24	*C-R*	**410308**
306R219	*C-R*	5957S
306R219-Y12	*C-R*	5957S
306VB7	*MARI*	**415027**
306VB7	*MARI*	**415027**!
306W120	*C-R*	450335
306W122	*C-R*	470086
306W124	*C-R*	**473313**
306W124-M1	*C-R*	**473313**
306W128	*C-R*	**473457**!
306W130	*C-R*	**473461**!
306W2	*C-R*	**473463**
306W2-M1	*C-R*	**473463**
306W22	*C-R*	**450307**
306W22-M1	*C-R*	**450307**
306W24	*C-R*	**410308**!
306W24-M1	*C-R*	**410308**!
306W28	*C-R*	**473473***
307-0713	*STEM*	370036A
307-0713	*STEM*	370349A
307-0723	*STEM*	370065A
307-0723	*STEM*	376590A
307-0743	*STEM*	386025A
307-0743	*STEM*	**416158**
307-0744	*STEM*	370037A
307-0744	*STEM*	370338A
307024	*AMC*	5778
30705	*GARLK*	**471633**!
307073C91	*IH*	**471267**!
3070OS	*JN-MN*	**411394**!
30710	*C-R*	78X95X10
307109	*JAC*	**472319**

! Industrial Size/Type * Minor Width Difference

= The U.S. customer service number is 877-4-TIMKEN. The Canadian customer service numbers are 800-565-4927 (English) and 800-565-0438 (French-Canadian).

Mfr. No.	Name	Zero Duplication or Recommended Industrial
307121	*GWI*	**471267**!
30715	*CARQU*	25598
30715	*GARLK*	**471646**!
30715608	*TROS*	7216
3071643	*CUMMI*	934023
30720	*CARQU*	35094
307239	*O-M*	425RR
30725	*C-R*	78X100X10
30725	*CARQU*	35316
3072V	*SPG*	**471281**
30730	*GARLK*	**470590**
30737S	*SPG*	**410737**!
3073OS	*JN-MN*	**410737**!
30740	*C-R*	78X105X10
30740	*CARQU*	35315
3074482	*CUMMI*	**471795**=
3074BA	*SPG*	**471466**
3074V	*SPG*	**471466**
307557	*GWI*	**471766**!
3075BA3	*SPG*	**470954**=
30760	*C-R*	78X110X10
307615	*WHITE*	**473215**!
3076203	*CUMMI*	100518
30769	*CARQU*	35486
3077	*C-R*	220818
3077	*C-R*	8X18X5
3077	*C-R*	8X18X7!
30770	*C-R*	78X115X10
30771	*C-R*	710090
30772	*C-R*	710106
307739	*AMC*	410059
307739	*AMC*	**470380**!
307824R91	*IH*	**470565**=
307882R91	*IH*	441130
307968R91	*IH*	**412920**!
307975	*WHITE*	5M867
307VB7	*MARI*	55028
308	*UNIVE*	**415437**
308	*UNIVE*	**415437**!
308-0836	*STEM*	370001A
308-0853	*STEM*	370124A
308-0856	*STEM*	370131A
308-0863	*STEM*	370132A
308-0864	*STEM*	380048A
308070	*JAC*	**471539**!
308079	*JAC*	**471539**!
308160	*ACF*	**474281**!
308160	*H-S*	**474281**!
30816008	*TROS*	**471391**!
30820008	*TROS*	**473242**
30820807	*TROS*	**472016**
30820808	*TROS*	**472016**
308214	*GWI*	**55301S**
30821608	*TROS*	**471138**!
30822408	*TROS*	**470565**!
308277	*AMC*	**471984**
30839	*SEAMA*	**415371**
308405R1	*IH*	335924N
308412	*UNIVE*	**455566**
308424	*UNIVE*	**476470**
308425	*MICH*	**476470**
308437	*UNIVE*	**417181**!
308438	*MICH*	**417181**!
308449	*UNIVE*	**418028**
308449	*UNIVE*	455137!
308450	*MICH*	**418028**
308450	*MICH*	455137!
3084879	*CUMMI*	39821
308499	*UNIVE*	**415023**
30849D	*IH*	**415991**
30849D	*IH*	455146!
308500	*MICH*	**415023**
308510	*JAC*	**470954**!
308548	*AMC*	**471787**
3086279	*CUMMI*	100154
308677R93	*IH*	5364=
308719	*JAC*	**471224**!
308731	*JAC*	**472311**!
3088	*C-R*	8X22X7V
308811	*JAC*	**471571**
308986	*ACF*	**470530**!
308B14408	*TROS*	**470687**
308VB7	*MARI*	**416339**
308VB7	*MARI*	455031!
309-0903	*STEM*	**416892**
309-0904	*STEM*	**415058**
309-0912	*STEM*	370023A
309-0935	*STEM*	370047A
309-0957	*STEM*	**417506**
309-0960	*STEM*	370005A
309-0961	*STEM*	370030A
309-0964	*STEM*	370021A
309-0965	*STEM*	370019A
309-0970	*STEM*	370006A
309-0973	*STEM*	370003A
3090	*C-R*	50883=
309007	*H-S*	**450593**!
309013	*FREIG*	**416339**
309013	*FREIG*	455031!
3090915	*STEM*	**417505**
3090948	*STEM*	370069A
3090948	*STEM*	380069A
3091	*C-R*	50883=
309128R91	*IH*	441130
3092	*C-R*	8X22X7V
309209	*AMC*	**471504**!
309254C91	*IH*	**415035**
30927	*IDEAL*	35127
30928	*CARQU*	25598
30929	*CARQU*	35327
309323-C91	*IH*	370023A
30932D	*IH*	**473238**
309372	*JAC*	240733
3094	*C-R*	712022
309457	*AMC*	**473234**
3095278	*CUMMI*	100352
3095349	*CUMMI*	100196
309612	*H-S*	470059
309612	*H-S*	**470380**!
3096478	*CUMMI*	100253
3096479	*CUMMI*	100254
3096480	*CUMMI*	100252
309737	*AMC*	**471787**
309745	*H-S*	**471554**!
309781	*JAC*	**471554**!
3098	*CALSO*	**473227**!
30981	*CARQU*	421
309823C91	*IH*	**415958**!
309823C91	*IH*	**415958**
30983	*CARQU*	427RR
30985	*IDEAL*	35533
30986	*CARQU*	35315
30987	*CARQU*	35292
30989	*CARQU*	35011
3098SK	*SPG*	3098=
3099	*PEERC*	**471764**!
30991	*CARQU*	35315
3099421	*CUMMI*	600389
3099421	*SPG*	100199
309VB7	*MARI*	**416345**!
309VB7	*MARI*	455033
30A1635	*MINNM*	**480630**!
30A1680	*MINNM*	**471276**
30A2783	*MINNM*	203013
30A2801	*MINNM*	40301S
30A514	*MINNM*	**481792**
30A515	*MINNM*	**470712**!
30P514	*MINNM*	**471835**!
30PS462	*C-P*	**416476**!
30T811	*CLARK*	410059
30T811	*CLARK*	**470380**!
30X40X7SB	*TRSCM*	1129
30X40X7SB	*TRSCM*	30X40X7!
30X40X7SC	*TRSCM*	30X40X7!
30X40X7TC	*TRSCM*	30X40X7!
30X42X7SC	*TRSCM*	30X42X7!
30X42X7TC	*TRSCM*	30X42X7!
30X44X7SC	*TRSCM*	30X44X7!
30X44X7TC	*TRSCM*	30X44X7!
30X45X5SC	*TRSCM*	30X45X5!
30X45X5TC	*TRSCM*	30X45X5!
30X45X8SC	*TRSCM*	30X45X8!
30X45X8TC	*TRSCM*	30X45X8!
30X46X7SC	*TRSCM*	30X46X7!
30X46X7TC	*TRSCM*	30X46X7!
30X47X7SC	*TRSCM*	30X47X7
30X47X7TC	*TRSCM*	30X47X7
30X47X8TC	*TRSCM*	223020
30X48X8SC	*TRSCM*	30X48X8
30X48X8TC	*TRSCM*	30X48X8
30X50X7SC	*TRSCM*	30X50X7
30X50X7TC	*TRSCM*	30X50X7
30X50X8SC	*TRSCM*	30X50X8
30X50X8TC	*TRSCM*	30X50X8
30X52X7	*FORSH*	30X52X7
30X52X7	*SIMRT*	30X52X7
30X52X7SC	*TRSCM*	30X52X7
30X52X7TC	*TRSCM*	30X52X7
30X55X10SC	*TRSCM*	30X55X10
30X55X10TC	*TRSCM*	30X55X10
30X55X7BS	*ISP*	30X55X7
30X56X8SC	*TRSCM*	30X56X8
30X56X8TC	*TRSCM*	30X56X8
30X62X7SC	*TRSCM*	30X62X7
30X62X7TC	*TRSCM*	30X62X7
30X72X10SC	*TRSCM*	30X72X10
30X72X10TC	*TRSCM*	30X72X10
30X72X7BS	*ISP*	30X72X7
31-2634100	*WHITE*	J1127
310	*UNIVE*	**417355**!
310-1034+320-2216	*STEM*	370011A
310-1079+320-2009	*STEM*	370173A
310-1117	*STEM*	AR22
3100	*C-R*	**350364**
31004	*GARLK*	**471224**!
310099	*HYST*	204029
310099	*HYST*	204507!
3101	*C-R*	712021
3101030	*STEM*	AR8
3101059	*STEM*	AR11
310131	*H-S*	**416921**!
310195	*FORD*	710409
31020	*GARLK*	**471649**!
31020008	*TROS*	**412725**
31020404	*TROS*	5756
31021805.75	*TROS*	204035
31023004.5	*TROS*	40337S
31023204	*TROS*	473476
31023204.5	*TROS*	40337S
3102609	*WHITE*	730016
31028	*GARLK*	**471689**!
3103	*NATL*	3095
3103341	*WHITE*	100495
3103341	*WHITE*	**417349**
3103513	*WHITE*	730003
3103514	*WHITE*	370047A
31040	*GARLK*	**471733**
3104085	*WHITE*	**415991**
3104085	*WHITE*	**415991**!
310413SL	*MICH*	**455500**
310424	*UNIVE*	**416292**
310425	*MICH*	**416292**
310437	*UNIVE*	**417491**
310438	*MICH*	**417491**
310449	*UNIVE*	**415085**!
310449	*UNIVE*	456648
310450	*MICH*	**415085**!
310450	*MICH*	456648
3104650	*ALLCH*	J1105
3104651	*ALLCH*	**473238**
3104652	*ALLCH*	**473238**
310500	*MICH*	455024
310507R91	*IH*	**470565**=
310508R91	*IH*	**473467**=
310509R91	*IH*	**415995**!
310510R91	*IH*	**417344**
310511R91	*IH*	**412473**
310512R91	*IH*	**415449**=
310514R91	*IH*	3893V!
310514R91	*IH*	**415379**!
310515R91	*IH*	**415458**
310516R91	*IH*	**415437**
310517R91	*IH*	455040N=
310518R91	*IH*	455685N=
310522R91	*IH*	**473467**=
3105234	*AMC*	**471141**!
310523R91	*IH*	**415995**!
310524R91	*IH*	**417344**
310525R91	*IH*	**412473**!
310526R91	*IH*	**415449**=
310528R91	*IH*	**415379**=
310529R91	*IH*	**415458**=
310531R91	*IH*	455040N=
310532R91	*IH*	455685N=
3105459	*AMC*	**471344**
310550R91	*IH*	**417357**
310550R91	*IH*	455192!
310599	*O-M*	**471571**
310622	*JAC*	**471267**!
310625	*ACF*	**470334**!
310625	*H-S*	**470334**!
310625	*JAC*	**476838**!
3106297	*WHITE*	730026
3106298	*WHITE*	HU012A
3106480	*AMC*	**471619**!
3106565	*WHITE*	**472164**!
3108127	*WHITE*	**471466**=
3108650-R91	*IH*	**473238**
3108OS	*JN-MN*	**474264**
3109130	*AMC*	6074
310921	*ACF*	**472924**!
310921	*H-S*	**472924**!
310946R91	*IH*	**476470**
310946R91	*IH*	**476470**!
310971	*H-S*	**411253**!
310978	*VICK*	**471649**!
310B20808	*TROS*	8243
310C204065	*TROS*	200110
310D20404	*TROS*	5756
310D20604	*TROS*	40973S
310E21805.75	*TROS*	493291
310G15604	*TROS*	6808N
310H13604	*TROS*	5778
310VB7	*MARI*	**415034**!
311-405-641A	*VW*	1165
311-405-641B	*VW*	1195
311035	*WOOL*	**416891**!
31105D	*IH*	**412473**!

! Industrial Size/Type

= The U.S. customer service number is 877-4-TIMKEN. The Canadian customer service numbers are 800-565-4927 (English) and 800-565-0438 (French-Canadian).

Mfr. No.	Name	Zero Duplication or Recommended Industrial
31106D	*IH*	**481864**
31108D	*IH*	470059
31108D	*IH*	**470380**!
3110A	*ROCKW*	410059
3110A	*ROCKW*	**470380**!
3111035	*WOOL*	**416888**!
31113	*GARLK*	**471652**
311132	*CATER*	40085S
31117	*GARLK*	**471692**!
31118	*GARLK*	**471692**!
31119D	*IH*	**415984**!
31125	*C-R*	45825S
31128	*GARLK*	**470712**!
31129	*C-R*	45825S
3112948	*AMC*	240151
31130	*C-R*	228005
3113029	*AMC*	**470712**!
31133	*C-R*	**416288**!
31138	*C-R*	**416404**!
31138	*GARLK*	**471763**
3113831	*AMC*	**471344**
31139	*C-R*	**416404**!
31140	*C-R*	**416404**!
31140	*GARLK*	**471763**
311405641	*VW*	1174
311405641	*VW*	38X52X8.5!
31141	*C-R*	**416404**!
31142	*SPICE*	442380
311421	*SPICE*	442380
311422	*SPICE*	442380
31144	*C-R*	2260
31145	*C-R*	**416404**!*
31146	*C-R*	**416404**=
31147	*C-R*	**416404**!
3114778	*AMC*	9613S
31148	*C-R*	**416404**!*
31149	*EATON*	370019A
31149	*EATON*	415060
31149	*EATON*	455060
311493	*AMC*	340771
31152	*C-R*	**416404**=
311531	*H-S*	**481073**
31158	*C-R*	6754S=
311616	*AMC*	**471827**
31162	*MICH*	**471648**
31162	*UNIVE*	**471648**
31163	*C-R*	**417621**!
31164	*C-R*	**417621**!
3116442	*AMC*	**470954**
31165	*C-R*	**417621**!
311653330	*WHITE*	**416664**!
31166	*C-R*	**417621**!
31168	*C-R*	5578
31170	*C-R*	**417621**!
311706560	*WHITE*	**415725**!
311717	*H-S*	**412943**
311718	*H-S*	**471820**
31172	*C-R*	5578
311721	*AMC*	**470898**
31173	*C-R*	**417621***!
31175	*C-R*	370145A
31175	*MICH*	**471688**
31175	*UNIVE*	**471688**
31176	*C-R*	**417621**!
31177	*C-R*	**417621**!
31178	*C-R*	**417621**!
31179	*C-R*	**417621***=
31182	*UNIVE*	**450040**
311825	*H-S*	**471472**!
31183	*MICH*	**450040**
311837	*ACF*	50010
311837	*H-S*	50010
31185	*C-R*	39817
31185	*C-R*	**417621**
311865	*Y-T*	**416654**!
31189	*C-R*	**417621**!
31190	*C-R*	**417621**!
31191	*C-R*	**417621**!
31193	*C-R*	**417621**!
31195	*C-R*	**417621**!
31196	*C-R*	**417621**!
31197	*C-R*	**417621**!
31198	*C-R*	**417621**!
31199	*C-R*	**417621**!
311994R91	*IH*	**471224**!
311VB7	*MARI*	**415088**
311VB7	*MARI*	**415088**!
312	*UNIVE*	**416339**
312	*UNIVE*	455031!
3120	*C-R*	**350364***!
31200	*C-R*	**417621**!
31202	*C-R*	8976S
31203	*C-R*	8976S*
31205	*GEM*	240151
31206	*C-R*	**417621**
31207	*AM WH*	**473229**
31207	*C-R*	**416288**!*
3120RB	*SPG*	3120N=
3121	*C-R*	**350364***!
312119	*ALLCH*	40438S
31213	*C-R*	**416288**
31213207	*TROS*	450540
31214	*VICK*	**417040**
31214807.5	*TROS*	**470088**
31215	*C-R*	**416288**
31215607.5	*TROS*	**473458**!
31216007	*TROS*	**473462**
31216007.5	*TROS*	**473462**
31220007	*TROS*	**473464**
31220007	*TROS*	**473464**!
31220007.5	*TROS*	**473464**
31220407	*TROS*	**416738**!
31220407	*TROS*	450096
31220806	*TROS*	**472409**!
31220807	*TROS*	**472409**!
31220807.5	*TROS*	**472409**!
31221	*C-R*	**416288**!
31221007.5	*TROS*	**450621**
31221207	*TROS*	**470354**
31221207.5	*TROS*	**470354**
31221211	*TROS*	6636S
31221607	*TROS*	**410737**!
31221608	*TROS*	**410737**!
31221611.5C	*TROS*	**410737**!
31222	*C-R*	**416288**!
31223204	*TROS*	**472029**
312237	*ACF*	**473215**!
312237	*H-S*	**473215**!
312238	*ACF*	470950!
312238	*ACF*	6241S
312238	*H-S*	470950!
312238	*H-S*	6241S
31224	*GARLK*	**471413**!
31227	*C-R*	**416288**!*
312276	*WHITE*	**473467**!
31228	*C-R*	**416288**!*
31228D	*IH*	**415371**
31229	*C-R*	**416288**!
31231	*C-R*	**416288**!
31232	*GARLK*	**471737**
31233	*C-R*	**416288**!
31234	*HYST*	**410102**
3123416	*AMC*	240698
31235	*HYST*	**412920**!
312356	*FORD*	**473228**
3123576	*AMC*	**470625**!
3123587	*AMC*	**472572**!
3123667	*AMC*	340797
3123668	*AMC*	340797
31237	*C-R*	416287V=
31238	*C-R*	**416288**!
31239	*C-R*	**416288**!
3123SK	*SPG*	3123=
312424	*UNIVE*	**416294**!
312437	*UNIVE*	**412473**!
312438	*MICH*	**412473**!
312438ISL	*MICH*	**412473**!
31244	*C-R*	AR5+370014A
312450	*MICH*	**417191**
312450	*MICH*	456585
312450990	*WHITE*	**417134**
31246	*GARLK*	**471766**!
312460C91	*IH*	410686N
312462	*UNIVE*	**417354**!
312462V	*UNIVE*	**417354**!*
312463	*MICH*	**417354**!
312469	*MICH*	**455249**!
31247	*C-R*	**417621**
3124732	*AMC*	6760S
312499	*UNIVE*	**417191**
312499	*UNIVE*	455165!
3124S	*SPG*	3124=
3125	*C-R*	**350364**
31250	*C-R*	**417171**!*
312500	*MICH*	**415025**
31252	*C-R*	**417171**!
31253	*C-R*	**417171**!
31255	*C-R*	**417171**!
31257	*C-R*	**417171**!
312580	*H-S*	**473446**
31262	*GARLK*	**471795**
31269	*C-R*	**417172***
3126S	*SPG*	3126=
31270	*C-R*	**417172**
31270	*SPICE*	**416273**!
31271	*C-R*	**417172**
31274	*C-R*	**417172**
31275	*C-R*	**417172**
31276	*C-R*	**417172***
31278	*C-R*	**417172**
31279	*C-R*	**417172**
31281	*C-R*	**417172**
3128171	*AMC*	6855N=
31284	*C-R*	6644
31288	*C-R*	5751
31292	*C-R*	6603=
3129318	*AMC*	**474255**
3129320	*AMC*	**472560N**
31299	*C-R*	**416297**
312C116	*C-R*	210914
312VB7	*MARI*	**417191**
312VB7	*MARI*	455165!
312W475	*CONE*	5518
31301	*C-R*	**416297**
31302	*HYST*	**470625**!
313046	*ACF*	**471553**!
313046	*H-S*	**471553**!
31307	*C-R*	370046A
31307	*C-R*	5100
313096	*JAC*	**473454**
3130C	*MINNM*	**417344**!
313100R91	*IH*	**415021**
313112	*C-R*	450516
31311F	*DIA*	**471689**!
313122	*C-R*	**470687**
313128	*C-R*	**473240**!
313130	*C-R*	**471391**!
313130M1	*C-R*	**471391**!
31316	*C-R*	**416024***
3131C	*MINNM*	**413469**!
3132	*C-R*	**473242**
313210	*C-R*	**472150**
313210M1	*C-R*	**472150**
313212	*C-R*	**470565**!
313212M1	*C-R*	**470565**!
313214	*C-R*	**471887**
31322	*C-R*	450311
31322M1	*C-R*	450311
31324	*C-R*	**472016**
31324	*GR-DV*	**472016**
313240	*H-S*	**415458**!
313245	*FORD*	**472572**!
313249	*H-S*	**415995**!
31324M1	*C-R*	**472016**
31324S	*FORD*	**472572**!
31326	*C-R*	472020
313262	*LEROI*	**415960**
31326M1	*C-R*	472020
31328	*C-R*	**471138**!
31328	*GEHL*	**471138**!
31328M1	*C-R*	**471138**!
313290	*SPG*	43290S
3132M1	*C-R*	**473242**
31330	*SPICE*	**471192**
31330	*VIC*	**471192**
31333	*C-R*	**415021***
3134	*PEERC*	**471192**
31340	*C-R*	**415021**
3134093	*AMC*	**472572**!
31341	*C-R*	**415021**
31343	*HYST*	**415138**!
31344	*C-R*	**415021**
3134500	*CALI*	**455019**!
31348	*GARLK*	**472258**!
31353	*C-R*	**415394***
31355	*C-R*	**415394***
31359	*C-R*	**415394***
31360	*GARLK*	**471192**
31361	*C-R*	7896S
31362	*C-R*	9600S
31364	*C-R*	5405
31368	*GARLK*	**473214**!
3136881R91	*IH*	2260
3136881R92	*IH*	2260
31369	*C-R*	5410
31370	*GARLK*	**473214**!
313734	*FORD*	**473215**!
31374	*C-R*	5452
313756	*H-S*	**471549**!
313757	*H-S*	**471750**!
313777	*JAC*	**481537**
31378	*C-R*	5406
31378	*C-R*	6481S$
31378	*GARLK*	**473215**!
3138	*PEERC*	470950!
3138	*PEERC*	6241S
3138143	*AMC*	**470774**!
313820R91	*IH*	**473447**
31384	*CASE*	340900
31385	*C-R*	5185
313856R91	*IH*	**450048**
3138701R91	*IH*	2261
313886	*JAC*	**471466**!
31390	*C-R*	5313
313903R91	*IH*	**415227**=
313912R91	*IH*	**415449**=
313912R92	*IH*	**415449**=
313913R91	*IH*	**415995**=

! Industrial Size/Type * Minor Width Difference $ F-M Number Is Part Of A Kit
= The U.S. customer service number is 877-4-TIMKEN. The Canadian customer service numbers are 800-565-4927 (English) and 800-565-0438 (French-Canadian).

Mfr. No.	Name	Zero Duplication or Recommended Industrial
313913R92	IH	415995=
313914R91	IH	417354!
313914R92	IH	417354!
313915R91	IH	415379=
313915R92	IH	415379=
31392	C-R	6897=
31393	C-R	5494
313936	H-S	473448
313943R91	IH	455282N=
3139OS	JN-MN	450307*
313BM212-L	C-R	470565!
313CH212	C-R	470565!*
313F130	C-R	471391!
313VB7	MARI	415995!
313W112	C-R	450516
313W122	C-R	470687
313W128	C-R	473240!
313W130	C-R	471391!
313W130-M1	C-R	471391!
313W2	C-R	473242
313W2-M1	C-R	473242
313W210	C-R	472150
313W212	C-R	470565!
313W212-M1	C-R	470565!
313W214	C-R	471887*
313W22	C-R	450311
313W22-M1	C-R	450311
313W24	C-R	472016
313W24-M1	C-R	472016
313W26	C-R	472020
313W28	C-R	471138!
313W28-M1	C-R	471138!
314	UNIVE	415697!
314	UNIVE	455547
3140	C-R	350364
3140380	AMC	472572!
3140D	GOODM	416345!
3140D	GOODM	455033
3141	C-R	712021
31415TA	TRSCM	417621
314172KB	TRSCM	8976S
3142044	AMC	6952S=
31424TA	TRSCM	416288!
3143382	CLARK	415447
31435	VICK	415146!
31435	VICK	415991
3143C	MINNM	471750!
3143RAR	SPG	3143N
314425SL	MICH	418029!
314449	UNIVE	417492*
314450	MICH	417492
314462	UNIVE	417493
314463	MICH	417493
3144651	AMC	471195!
3144651	WILYS	471195!
3145	C-R	220860
3145	C-R	8X16X7!
314500	MICH	455026
31454	GARLK	473227!
31455TA	TRSCM	417172
3145CA	SPG	3145
3145CAR	SPG	5124
31462	GARLK	470625!
31464	GARLK	470625!
314658	CHRYS	473464!
314658	CHRYS	473464
31472	GARLK	470380!
314745	Y-T	415035!
314745	Y-T	415035
31475	EATON	415697!
31475	EATON	455547
314755-C91	IH	HU066A
3148004	AMC	473234!
3148051	GM	411
3148513	AMC	340356
31490	C-R	710080
31492	GARLK	473228!
314923	WHITE	473010
314924	H-S	473427
31494SA	TRSCM	455022
314963	CHRYS	473447
31498	GARLK	473228!
314FF128	C-R	5246
314FF22	C-R	5756
314G126	C-R	40337S
314VB7	MARI	415394
3150	C-R	8X22X7!
315019	H-S	471747!
3150254	AMC	473317
31504	C-R	710103
3150548	AMC	7686S
31506	C-R	228005
3150677	AMC	473234!
31507	C-R	228008
31508	HYST	417538
3150815	AMC	6952S=
3150858	AMC	240816
31509	C-R	228011
31509	C-R	228015
31509	C-R	80X100X10V!
31510	C-R	228009
31510	C-R	228012
31510	C-R	80X100X10!
3151007	AMC	473459
31511	C-R	228015
31512	C-R	228012!
31512	C-R	80X100X10!
31513	C-R	228010
31513	C-R	80X100X10!
31515	C-R	228020
31515	C-R	80X105X10
31515	C-R	80X105X13!*
31516	C-R	228009
31516	C-R	228011
31516	C-R	80X100X10V!
31517	C-R	228020
31517	C-R	80X105X12V!
31517	C-R	80X105X13!*
31519	C-R	80X105X13!*
31520	C-R	80X110X12
31521	C-R	80X105X13!
31524	C-R	80X100X10V
31525	C-R	228030
31525	C-R	80X110X10!
31525	CASE	5865
31526	C-R	80X110X10V
3153	FR-HT	471795
3153	PEERC	473228
31530	C-R	228030
31530	C-R	80X110X12!
31531	C-R	80X110X10V
31531	SPICE	410987!
3153482	AMC	473234!
31536	C-R	80X115X12*
3153825	AMC	473452
31540	C-R	80X120X10!
31540	C-R	80X120X13
3154112	AMC	311189
31545	C-R	80X120X13
315459	H-S	413469!
31546	C-R	80X120X13!
315465	TW-CO	6638S
3155	C-R	8X24X7
31550	C-R	55386
3155002	AMC	321460
3155002	WILYS	321460
31551	C-R	80X125X12*
3155168	AMC	410059
3155168	AMC	470380!
31554	SPICE	473228!
31554	VIC	473228!
3156012	AMC	473317
31565	C-R	80X130X12
31566	GARLK	473230!
31575	C-R	80X135X12
31575	HYST	472015!
3157506	AMC	411
31575B	HYST	473467
31576	GARLK	473231!
3158	NORDG	472179
3158482	AMC	473234
31585	C-R	80X140X12
3158703	AMC	470059
3158703	AMC	470380!
315872	JAC	340815
3159	NORDG	472193!
31590	GARLK	473010!
315945	JAC	6357S
315967	JAC	415995!
31598	GARLK	473232!
31599	CALI	291148=
315FF23-L	C-R	8243
315G130	C-R	40526S
315G23	C-R	40973S
315VB7	MARI	417181!
31600	CALI	295113=
3161025	CUMMI	5742
316124L	C-R	6818
316128L	C-R	6808N
31615608	TROS	451078!
31615608C	TROS	451078!
3161742	CUMMI	600211
3161772	CUMMI	5728
3161772	CUMMI	600211
31621008	TROS	450869
31621208	TROS	473245!
31621604	TROS	40316S
31621608	TROS	472636!
31621610	TROS	472636!
31622008	TROS	411394!
31622408	TROS	413246
31623204	TROS	442380
31623206	TROS	471271!
31623208	TROS	471271!
31624007	TROS	451143
31634	WAYNE	471733
31637-4	SPICE	J1130
31640	C-R	456799=
316405	OMC	17760
3164335	AMC	473445
3164335	Y-T	473445
316437	UNIVE	416624!
316449	UNIVE	415991
316449	UNIVE	455146!
316450	MICH	415991
316450	MICH	455146!
316462	UNIVE	417196!
316463	MICH	417196!
31646314	SPICE	415458=
31646314-2	SPICE	415458=
316475	MICH	415437
316475	MICH	415437!
316475	UNIVE	415437
316475	UNIVE	415437!
316487	UNIVE	417198
316499	UNIVE	415027
316500	MICH	415027!
316500	MICH	415027
316524	WHITE	472185!
3166233	AMC	8429S
316675	ACF	481644
316675	H-S	481644
3167833	AMC	8549S
316785	WHITE	41075S
316785A	WHITE	41075S
31690	GARLK	473237!
3169D5	WHITE	410308
316A23206C	TROS	7018N=
316FF29	C-R	205035
316G29	C-R	493291
316VB7	MARI	415027!
316VB7	MARI	415027
316W118	C-R	5778
317-1705+327-2718	STEM	415058
317-1721+327-2721	STEM	370132A
317-1756+327-2756	STEM	370023A
317-1756+327-2756	STEM	380023A
317-1790+327-2741	STEM	370069A
317-1790+327-2741	STEM	380069A
31704	GARLK	472164!
3170699	AMC	7686S
3170700	AMC	7687S
3171	C-R	470195!
3171	PEERC	471649!
31714	GARLK	472185!
3172073	WILYS	5111
3172073	WILYS	5111S
317219	H-S	471272!
317237	WHITE	471224!
31726	GARLK	472179
3173098	WILYS	5111
3173098	WILYS	5111S
3173532	AMC	473317
31743	GARLK	471984
3174533	AMC	471652
3174533	AMC	482208!
31750	GARLK	473313
317510R91	IH	50199S!
317510R91	IH	6863S!
31753	C-R	3385
317549R91	IH	412119!
317570R91	IH	415035
31758	C-R	456105*
31762	C-R	456105
31763	LEECE	450340
31769	LEECE	473414
31770	C-R	456105
31771	C-R	456105
317749C92	IH	5065
317807R91	IH	200856
317847R91	IH	471255!
31785	CHERY	471763
317879	H-S	472951
317879	H-S	474252
317923	WHITE	473010
317944R91	IH	417267
317996R91	IH	415035=
317VB7	MARI	417487
3180	PEERC	473234
31800	C-R	456105
3180041	AMC	473234!
318010	CLARK	417498
318011A	CLARK	472179
318012	CLARK	415449!
318014	CLARK	415995!
318018	CLARK	471224
31802	GARLK	472439
3180211	AMC	3404!

! Industrial Size/Type * Minor Width Difference

= The U.S. customer service number is 877-4-TIMKEN. The Canadian customer service numbers are 800-565-4927 (English) and 800-565-0438 (French-Canadian).

Mfr. No.	Name	Zero Duplication or Recommended Industrial
318026	CLARK	472179
318027	CLARK	416891!
318028	CLARK	412119!
31803	CLARK	411253!
318030	CLARK	450497=
318031	CLARK	456105
31804	GARLK	472439
318047C11	IH	712375
31805	CLARK	473228
31806	SPICE	482253
31807	CLARK	470682
31808	CLARK	472636!
31809	CLARK	473447
3181	NORDG	417492
31814	GARLK	472572!
3182	PEERC	474265
318243	WHITE	455151
31825	C-R	417490*
31826	GARLK	473238!
31827	CATER	417349!
31827	TMTR	417349!
31828	HYST	470088
31830	C-R	417490
31831	C-R	417490
318360	H-S	471760
31837	SPICE	410825
318371	SPICE	410825
31838	GARLK	473239!
3183886	AMC	473445
3183887	AMC	473459
3183981	AMC	473452
3183981	SPICE	473452
318449	UNIVE	415498*
3184494	AMC	471827
3184500	CALI	415379
318462	UNIVE	415711
318463	MICH	415711
318475	MICH	417497
318475	UNIVE	417497
31848	GARLK	473240!
318487	UNIVE	417498
318488	MICH	417498
318499	UNIVE	55028*
318500	H-S	415437
318500	MICH	55028
318507	AUTOZ	35342
318509	AUTOZ	35531
318512	AUTOZ	35617
31855	C-R	455336*
31858	C-R	455336
31859	C-R	455336
3186540	AMC	8549S
31866	C-R	455336*
31867	C-R	455336*
318675C91	IH	410308!
318678C91	IH	416271
31870	C-R	6358
31872	C-R	455336*
31874	C-R	6358
318987C91	IH	416271
318B22	C-R	416738!
318B22	C-R	450096
318W124	C-R	470088*
318W124-M1	C-R	470088*
318W22	C-R	416738!
318W22	C-R	450096
318W22-M1	C-R	416738!
318W22-M1	C-R	450096
318WL22-M1	C-R	416738!
318WL22-M1	C-R	450096
3190	CR-CF	471553!
31900	EATON	5951
319026C11	IH	722250
319039	ALLCH	473458!
319122	C-R	450533*
319124	C-R	470088*
319124M1	C-R	470088*
319125	C-R	450089
319126	C-R	450090
319126M1	C-R	450090
319128	C-R	473458!*
319128M1	C-R	473458!*
319130	C-R	473462
319130K	IH	473462
319130M1	C-R	473462
31917625	FMC	455026
31917665	FMC	415995!
3192	C-R	473464!
3192	C-R	473464
319212	C-R	473475*
319212M1	C-R	473475*
319216	C-R	472029
31922	C-R	416738!
31922	C-R	450096
31922	CONTI	416738!
31922	CONTI	450096
31922	FAIRB	416738!
31922	FAIRB	450096
31922M1	C-R	416738!
31922M1	C-R	450096
31924	C-R	472409!
31924M1	C-R	472409!
31925	C-R	450621*
31925M1	C-R	450621*
31926	C-R	470354*
31926M1	C-R	470354*
31928	C-R	470354
31928M1	C-R	410737!*
3192K	FORD	473464!
3192K	FORD	473464
3192M1	C-R	473464
3192M1	C-R	473464!
31930	C-R	455022*
319306	WHITE	240151
31931	C-R	455022*
3193613	AMC	.3404!
319413	ACF	413246
319413	H-S	413246
3194171	AMC	321460
3194827	AMC	321460
319506C1	IH	370124A
319506C92	IH	370124A
319527172	FMC	417357
319527172	FMC	455192!
31955	C-R	455022*
31960	C-R	455022
31960	HYST	471821!
31961	C-R	455022
319635R91	IH	417198=
31970	ACF	415991
31970	ACF	455146!
31970	HYST	415991
31970	HYST	455146!
319785	WHITE	41075S
319812	H-S	471341!
319F2	C-R	473464
319G130	C-R	40094S
319HC26-L	C-R	.3103!
319N28	C-R	410737!*
319W-112	LK-BT	415294!
319W-112-1	LK-BT	415072
319W-112-11	LK-BT	416229
319W-112-12	LK-BT	415294!
319W-112-14	LK-BT	417298
319W-112-2	LK-BT	457874
319W-112-20	LK-BT	455584
319W-112-5	LK-BT	417562
319W-112-8	LK-BT	417563
319W-171-1	LK-BT	472237=
319W-171-12	LK-BT	476517
319W-171-4	LK-BT	471379
319W-171-5	LK-BT	476510=
319W-171-7	LK-BT	476511=
319W-214-46	LK-BT	471567!
319W-215-19	LK-BT	471649!
319W-217-67	LK-BT	470334!
319W-218-75	LK-BT	472016
319W-219-19	LK-BT	471272!
319W-219-55	LK-BT	415449!
319W-219-62	LK-BT	415302
319W-220-14	LK-BT	416921!
319W-220-32	LK-BT	417621!
319W-221-40	LK-BT	415146!
319W-221-40	LK-BT	415991
319W-221-52	LK-BT	416557
319W-221-53	LK-BT	415937!
319W-221-70	LK-BT	416339
319W-222-18	LK-BT	415034!
319W-222-50	LK-BT	416556!
319W-222-50	LK-BT	472157
319W-222-64	LK-BT	416380!
319W-223-11	LK-BT	415371
319W-223-27	LK-BT	416865!
319W-224-52	LK-BT	416239!
319W-227-26	LK-BT	471619!
319W-228-22	LK-BT	471818
319W-229-7	LK-BT	473214!
319W-229-71	LK-BT	473440!
319W-230-33	LK-BT	473367
319W-230-4	LK-BT	472299
319W-231-44	LK-BT	413248
319W-231-9	LK-BT	472185!
319W-232-35	LK-BT	472016!
319W-232-38	LK-BT	416267!
319W-232-47	LK-BT	472018
319W-232-61	LK-BT	471138!
319W-232-62	LK-BT	472636!
319W-233-2	LK-BT	470565!
319W-233-21	LK-BT	415001!
319W-233-39	LK-BT	415458!
319W-233-56	LK-BT	417344!
319W-233-6	LK-BT	416271!
319W-238-38	LK-BT	416267!
319W-263-49	LK-BT	450039
319W-276-1	LK-BT	472237=
319W-276-12	LK-BT	476517
319W-276-3	LK-BT	472239
319W-276-4	LK-BT	471379
319W-276-5	LK-BT	476510=
319W-276-8	LK-BT	476511=
319W-34-40	LK-BT	417492
319W-34-5	LK-BT	416654!
319W-35	LK-BT	415041
319W-355-14	LK-BT	415317
319W122	C-R	450533*
319W124	C-R	470088*
319W124-M1	C-R	470088*
319W126	C-R	450090*
319W126-M1	C-R	450090*
319W128	C-R	473458!*
319W128-M1	C-R	473458!*
319W130	C-R	473462
319W17537	FMC	415449!
319W17625	FMC	455026
319W2	C-R	473464!
319W2	C-R	473464
319W2-M1	C-R	473464
319W2-M1	C-R	473464!
319W212	C-R	473475*
319W21446	FMC	471567!
319W21531	FMC	471692!
319W21624	FMC	471192
319W21624	LK-BT	471192
319W2175	FMC	473229!
319W21767	FMC	470334!
319W21875	FMC	472016!
319W21919	FMC	471272!
319W21955	FMC	415449!
319W21962	FMC	415302
319W22	C-R	416738!
319W22	C-R	450096
319W22-M1	C-R	416738!
319W22-M1	C-R	450096
319W2201	FMC	416664!
319W22032	FMC	417621!
319W22033	FMC	416288!
319W22033	LK-BT	416287
319W22033	LK-BT	416288!
319W22140	FMC	415146!
319W22140	FMC	415991
319W22152	FMC	416332!
319W22153	FMC	415937!
319W22170	FMC	416339
319W22218	FMC	415034!
319W22250	FMC	416556!
319W22250	FMC	472157
319W22264	FMC	416380!
319W2229	FMC	415697!
319W22311	FMC	415371
319W22327	FMC	416865!
319W22360	FMC	416107!
319W22412	FMC	417362!
319W22442	FMC	416229
319W22452	FMC	416239!
319W22726	FMC	471619!
319W22822	FMC	471818
319W22971	FMC	473440!
319W22980	FMC	471958
319W23013	FMC	471316
319W23033	FMC	473367!
319W2304	FMC	472299
319W23144	FMC	473240!
319W2319	FMC	472185!
319W23235	FMC	472016!
319W23238	FMC	416267!
319W23261	FMC	471138!
319W23263	FMC	472636!
319W23310	FMC	471887
319W23311	FMC	415371
319W2332	FMC	470565!
319W23321	FMC	415001!
319W23339	FMC	415458!
319W23356	FMC	417344!
319W2336	FMC	416271!
319W23522	FMC	416865!
319W23838	FMC	416267!
319W24	C-R	472409!
319W24-M1	C-R	472409!
319W25	C-R	450621*
319W26	C-R	470354*
319W26-M1	C-R	470354*
319W27611	FMC	85X130X13
319W27612	FMC	476517
319W27613	FMC	476518
319W2766	FMC	476512
319W2769	FMC	476514
319W28	C-R	410737!
319W28-M1	C-R	410737!

! Industrial Size/Type * Minor Width Difference

= The U.S. customer service number is 877-4-TIMKEN. The Canadian customer service numbers are 800-565-4927 (English) and 800-565-0438 (French-Canadian).

Mfr. No.	Name	Zero Duplication or Recommended Industrial
319W35510	FMC	471571
319W35514	FMC	415317
319W35515	FMC	415124
319W3553	FMC	415645!
319W3556	FMC	416167!
319W3557	FMC	416476!
319W3558	FMC	455406!
319W3611	FMC	451583!
319WL26-M1	C-R	6636S
319YM26	C-R	470354
319Z128	C-R	473458!*
31A9426	DALMO	472354!
31D3639	BENDI	340797
31TA154	OSHKO	471887
31TA397	OSHKO	471341!
31X10977	JOHND	340356
31X12575A	JOHND	416339
31X12584A	JOHND	415064
31X17484A	JOHND	455576!
31X44X8SC	TRSCM	31X44X8
31X44X8TC	TRSCM	31X44X8
320-2009	STEM	370057A
320-2034	STEM	370012A
320-2041/1043RING	STEM	370192A
320-6017	STEM	370036A
320-6017	STEM	370349A
32001	TRMBL	H075
32006	CHERY	472144!
32006	GARLK	471424!
3200636	AMC	480821!
320084	H-S	472636!
3202034	GMC	476838!
320211C91	IH	410737!
3202170	AMC	471538
32022006	TROS	5924
32023	GARLK	472492!
3202406	GMC	473010
3202615	EUCLD	471554!
3202615	GMC	471554!
3202618	AMC	470954
320265	GMC	471554!
320331	H-S	471137
3203459	AMC	472560N
32035	GARLK	472924!
3203580	AMC	6855N=
3203640	GMC	415023
320384	H-S	470645
3203S	SPG	3203=
32042	GARLK	417351!
320449	UNIVE	415389*
3204510	AMC	340356
320462	UNIVE	416332!
320463	MICH	416332!
320475	MICH	415937!
320475	UNIVE	415937!
3204830	AMC	PSK-1
320487	UNIVE	417355!
320488	MICH	417355!
320499	UNIVE	416125!*
3204S	SPG	415995=
320500	MICH	416125!
3205000	GMC	411253!
3205298	WILYS	470954!
3205331	AMC	5111
3205331	AMC	5111S
3205502	GMC	450165
3205502	GMC	471801!
32056	GARLK	472397!
320563	NATL	2025
320563	SPG	2025
320583	NATL	43X60X8!
320595SS	SPG	320595
3206237	GMC	473462
3206691	AMC	5112
3206691	AMC	5112S
3206691	WILYS	5112
3206691	WILYS	5112S
320678X	SPG	225650
3206864	GMC	471472!
32071	GARLK	473242
32077	ROSS	323138!
320834R	SPG	38X74X11
320839VD	SPG	224205
320840RA	SPG	222025
3208474	AMC	473452
320942	H-S	471192
320A23108	TROS	6785
320C21606	TROS	44052
320JX216	MACK	415938
321-501-641	AUDI	1962
321-501-641	VW	1962
321-501-641	VW	224052
321-501-641E	VW	1962
321009R91	IH	5581=
3210521	GMC	417316!
3210522	GMC	455005
321055	H-S	471747!
3211035	C-W	416229
3211035	WOOL	416229
321109BG	NATL	224045
3211172	GMC	471224!
321124SK	SPG	223014
321148R91	IH	5592=
32115-C0400	HINO	225875
321152HA	SPG	1108
321155RA	SPG	223750
321157	SPG	224460
321165	SPG	224650
321167R92	IH	415991!
321167R92	IH	415991
3211759	GMC	471787!
321176H	SPG	710334
321195	NATL	471195!
321202HA	SPG	227045
321214VG	SPG	710164
321218HA	SPG	712008
321220RA	SPG	321220
321224	NATL	471224!
321237	H-S	473215!
321251HA	SPG	223602
3212529	GMC	450593!
321255	SPG	471255!
321264	NATL	471264!
321267R91	IH	415991
321267R91	IH	415991!
321267R92	IH	415991!
321267R92	IH	415991
321276	SPG	471276
321282R91	IH	471504
321284R1	IH	J983=
321293RA	SPG	223220
321298	JAC	471224!
3212984	GMC	473419
321299RA	SPG	223800
32129SRA	SPG	224020
3213601	GMC	471354!
321389	NATL	470954!
321412	SPG	481163
3214224	NATL	471224!
321442	NATL	471442!
321501641A	AUDI	1165
3215360	GMC	471264!
321545R91	IH	473239!
321546R91	IH	417343!
321570	SPG	471570!
32159	GARLK	473204
321593	H-S	471255!
321596R91	IH	471224=
321597R91	IH	471224=
321606	H-S	350156
321606	H-S	473096
321643	NATL	471643!
321649	NATL	471649!
32166	HYST	416239!
32167	JOHND	204017
32169	LEECE	471760
32171	GARLK	470898
3217590	GMC	455019!
3217634	GMC	416339
3217634	GMC	455031!
321782R93	IH	396412*=
3217873	GMC	416125!
3217874	GMC	474264
32180	WAYNE	472164!
32185	HYST	473236!
321852	WHITE	471766!
32185A	JOHND	200110
32186	GARLK	472015!
32186	HYST	473236!
3218686	GMC	415960
3218769	GMC	470059
3218769	GMC	470380!
32189	LEECE	471192
3218904	AMC	2876
3219176	GMC	417316!
32195	GARLK	410308!
32195	GARLK	473468
32195	LEECE	473016!
32198	GARLK	472016!
3219S	GIB	472572!
321VB7	MARI	417210!
3220	C-R	50445*
3220403	AMC	473441
32205	HYST	472012
32210	GARLK	473243
3221338	GMC	470712!
3221339	GMC	473225!
3221342	GMC	416738!
3221342	GMC	450096
3221709	GMC	473460
32218	GARLK	413469!
322228	H-S	472179
322240	NATL	476838!
3222550	AMC	7687S
322309	WOOL	415991
322309	WOOL	455146!
3223363	AMC	5121
322375	H-S	417316!
3223795	WHITE	472636!
322422	WHITE	470050
322424C91	IH	470565!
3224704	AMC	321460
322475	MICH	417501
322475	UNIVE	417501
322499	UNIVE	55030*
322500	MICH	55030
322674	CATER	471833
322681C91	IH	472492
3228	AT-PL	473463
32283	C-R	40375
3228401R91	IH	2260
3228457R1	IH	2261
322862	JAC	450039
32288	HYST	417509
32289	C-R	320691
32298	SPICE	471646!
3229964	GMC	417486
3230	C-R	50445
32301	C-R	228480
32302	C-R	228480
32303	GARLK	471272!
323039	H-S	417357
323039	H-S	455192!
32304	C-R	228480
3230430	AMC	8429S
3231	PEERC	472924!
323112	NATL	470530!
323113	SPG	471466!
3231145	GMC	471192
32312407.5	TROS	450492
323138	NATL	323138
32316008	TROS	450965
32317	GARLK	471138!
323191	NATL	417316!
32320804	TROS	40097S
32320807.5	TROS	413469!
32321207.5	TROS	412943
32321407.5	TROS	50631
32321607.5	TROS	411253!
32321608	TROS	411253!
32322007.5	TROS	410694!
323220M1	C-R	451143
32322404	TROS	40101S
32322407.5	TROS	412119!
32322409.5	TROS	412119
32322412	TROS	412119!
32323007.5	TROS	50560
32323207.5	TROS	410496!
32324007.5	TROS	412871!
3232755	GMC	450811=
32329	GARLK	472636!
3232A	HERCU	455189
32330	C-R	710180
32332	C-R	710180
323324VG	SPG	3476V
3233871	GMC	471766!
32341	GARLK	412920!
32343	C-R	417362!
32344	C-R	417433*
32344	C-R	417433
32348	C-R	417433!
32350	C-R	417433
32351	C-R	417433!
323562C91	IH	415449
32358	KINGN	476838!
3235929	AMC	473228!
32360	C-R	455566
32362	C-R	455566
32362	GARLK	415259!
32364	C-R	476470
32368	C-R	476470
32371	C-R	476470!
32371	C-R	476470
3237134	GMC	415937!
323715BX	SPG	1953
323715BX	SPG	42X60X7!
32374	C-R	476470
32375	C-R	476470
323762BX	SPG	1994
323762BX	SPG	48X70X9!
32377	C-R	476470!
32377	C-R	476470
32378	C-R	476470!
32378	C-R	476470
32379	C-R	476470!
32379	C-R	476470
3237VJ	SPG	3237
32380	C-R	100494

! Industrial Size/Type * Minor Width Difference

= The U.S. customer service number is 877-4-TIMKEN. The Canadian customer service numbers are 800-565-4927 (English) and 800-565-0438 (French-Canadian).

Mfr. No.	Name	Zero Duplication or Recommended Industrial
32380	C-R	476470!
32380	C-R	476470*
32380D	IH	412473!
32381	C-R	476470!
32381	C-R	476470
3238137	AMC	3942
32382	C-R	476470!
32382	C-R	476470
32383	C-R	476470!
32383	C-R	476470
32384	C-R	476470
32384	C-R	476470!
32385	C-R	100494
32385	C-R	476470!
32387	C-R	476470
32388	C-R	476470
32390	C-R	476470
32392	C-R	476470!*
3239231R91	IH	415082
32393	C-R	476470
32394	C-R	476470*
32395	C-R	476470*
32395	C-R	476470
32396	C-R	476470
32397	C-R	476470
32397	C-R	476470!
323978	AUTOZ	BS40645
32398	C-R	476470
323981	AUTOZ	BS40644
32399	C-R	476470
324-X416	C-R	7208S
3240	C-R	50445
3240086	AMC	9912
32401	C-R	476470
324014R91	IH	471224!
32402	C-R	476470!
32402	C-R	476470
32403	C-R	476470!
32403	C-R	476470=
324043R91	IH	416888!
324046BX	SPG	30X52X7
32404TA	TRSCM	417433!
32404TA	TRSCM	455566
32406	C-R	476470!
32406	C-R	476470
3240D	GOODM	416339
3240D	GOODM	455031!
3241	FMS	223010
32410	C-R	100494
32410	C-R	476470!
324112SSO	SPG	324112
324115R	SPG	223235
324115R	SPG	32X46X6!
324115RR	SPG	223235
324115RR	SPG	32X46X6!
324118	WHITE	417484!
32412	C-R	476470
324120R91	IH	476470!
324120R91	IH	476470
32414810	TROS	210945
324151RX	SPG	324151=
324155	WHITE	415995!
3241669	AMC	3698
32418	C-R	476470
324186	SPG	1884
324189	H-S	50081
32419	C-R	476470
324191R91	IH	392076*=
324192R91	IH	392077*=
3241RB	SPG	3241
32420007.5	TROS	410102
32421607.5	TROS	412920!
32421611	TROS	412920!
32422	GARLK	470565!
32422007.5	TROS	450133
32422404	TROS	413247!
32422407.5	TROS	413247!
32422VB	TRSCM	476470
32423	C-R	417181!
32423205	TROS	470605!
32423207.5	TROS	470605!
32423208	TROS	470605!
324234VD	SPG	324234V
32423TB	TRSCM	476470
32424	C-R	417181!
32424008	TROS	413248
324241	WHITE	471570!
32424TA	TRSCM	476470!
32425	C-R	417181!
324267	WHITE	472394
32428	C-R	417181!
32429	C-R	417181!
3242D	GOODM	417357
3242D	GOODM	455192!
3243	PEERC	473467!
32430	C-R	417181!
32431	C-R	417181!
32432	C-R	417181!
32433	C-R	417181!
32434	GARLK	413246
324341C91	IH	100495
324341C91	IH	417349
324342R91	IH	350156
324342R91	IH	473096
32435	C-R	417181!
32436	C-R	417181!
32437	C-R	200870
324373R91	IH	472397!
324394	H-S	471649!
324395	H-S	471652
3243D	GOODM	416130!
32441	C-R	7208S
32442	C-R	7208S
32446	C-R	418028
32446	C-R	455137!
32446	GARLK	413247!
324475	MICH	415379!
324475	MICH	415379
324475	UNIVE	415379!
324475	UNIVE	415379
32448	C-R	418028*
324487	UNIVE	417205!
324488	MICH	417205!
32449	C-R	418028*
324499	UNIVE	416339
324499	UNIVE	455031!
3244E	GOODM	415036
324500	MICH	416339
324500	MICH	455031!
32452	C-R	418028
32452	C-R	455137!
324525	MICH	415150!*
32453	C-R	418028
32453	C-R	455137!
32461	GARLK	416271!
324631	SPICE	473215!
324634	SPICE	415449!
32467	C-R	418028
3246D	GOODM	415041
32470	C-R	418028
32470	HYST	417492
324729R91	IH	417267
32473	C-R	418028
32473	C-R	455137!
324731R91	IH	470380!
324732R91	IH	472185!
32474	C-R	418028
32474	C-R	455137!
32474TA	TRSCM	415577
32477	C-R	418028
32477	C-R	418028*
32478	C-R	418028
32481	C-R	418028
324867	H-S	471224!
3249244	GMC	472924!
324960	Y-T	410825
32498	C-R	418028
324A23206	TROS	472397!
324B28	C-R	472636!
324BM28	C-R	472636!
324G	OSHKO	476470
324W120	C-R	450467
324W28-L	C-R	473245!
325008A	HARWA	32X50X8
32501	C-R	418028*
32501	C-R	455137!
3250132	AMC	1119
3250132	AMC	710331
32502	C-R	415137!
32502	C-R	418028*
3250259	AMC	3476
3250262	CHRYS	710205
32504TA	TRSCM	418028
32505	C-R	418028
32506	C-R	418028
3250632	IH	450398
3250632	IH	471267!
32507	C-R	418028
32507	C-R	455137!
3250733	AMC	3553
32508	C-R	415137!
32508	C-R	418028
325088	SPG	325088
325120	C-R	450467
325124M1	C-R	412040
325128L	C-R	7216
3251309	GMC	415995!
32514	C-R	476303!
32516	C-R	415137!
32516	C-R	418028
32519	C-R	418028
3252	C-R	412027
32521	C-R	418028
32521	C-R	455137!
325210	C-R	411394!
325210	FAIRB	411394!
325210M1	C-R	411394!
325212	C-R	413246
325212M1	C-R	413246
325214	C-R	412040
325214M1	C-R	412040
325216	C-R	471271!
32522	C-R	450313
32522M1	C-R	450313
32523	C-R	418028
32523	C-R	455137!
32524	C-R	473243
32524M1	C-R	473243
32525	C-R	473245!
32526	C-R	473245!
32526	HU-WR	473245!
32526M1	C-R	473245!
32528	C-R	472636!
32528K	FAIRB	472636!
32528M1	C-R	472636!
3252M1	C-R	412027
32533	DIVCO	474278!
32536	GARLK	471271!
32536	GR-DV	473245!
325369	H-S	471224!
32538	C-R	417353!
32538	GOODM	472636!
32540	C-R	417353!*
325400VG	SPG	228250
325400VG	SPG	710448
32541	C-R	417353!
32542	C-R	417353!
325421	SPICE	5131
32543	C-R	417353!
32544	C-R	417353!
325472	JAC	471267!
32548	GARLK	470605!
325485	JAC	472475
32551	GARLK	415449!
325510A	HARWA	32X55X10
325518	SPG	85X120X12
325518BG	SPG	85X120X12
325529BG	SPG	60X90X10
32553	C-R	415577
32554	C-R	415577
32555	C-R	55236
32557	GARLK	415449!
325588VG	SPG	710237
325589V	SPG	229210
32559	C-R	415577
32560	C-R	456305*
32560F	DIA	471570!
32561	C-R	416865!*
32563	C-R	416865!
32563	GARLK	415449!
325641HA	SPG	228700
325657SS	SPG	170X200X15
325662VD	SPG	325662V
325668	H-S	472287!
32569	GARLK	416273
32570	C-R	415023
32571	C-R	415023
32582	C-R	415023*
32583	C-R	415023*
325836	NATL	415995!
325836	NATL	415995!
32584	C-R	415023
32585	C-R	415023
325905	NATL	415001!
32591	C-R	415023
32595	C-R	418028
325954	WHITE	470625!
32597	C-R	455328
325988	WHITE	473313
32599	C-R	455328*
325A28	C-R	472636!*
325AMM28	C-R	472636!*
325B216	C-R	471271!
325B28	C-R	472636!
325BM28	C-R	472636!
325CHA28	C-R	472636!
325F214	C-R	412040
325F28	C-R	472636!*
325FF216	C-R	442380
325FM128	C-R	472636!*
325G216	C-R	442380
325G28	C-R	40316S
325HD216	C-R	442380
325HMS216-L	C-R	7018N=
325N28	C-R	472636!
325R222	C-R	6532S=
325R222-Y12	C-R	6532S=
325W128	C-R	451078!

! Industrial Size/Type * Minor Width Difference

= The U.S. customer service number is 877-4-TIMKEN. The Canadian customer service numbers are 800-565-4927 (English) and 800-565-0438 (French-Canadian).

Mfr. No.	Name	Zero Duplication or Recommended Industrial
325W128-M1	C-R	**451078**!
325W2	C-R	**412027**
325W2-M1	C-R	**412027**
325W210	C-R	**411394**!
325W210-M1	C-R	**411394**!
325W212	C-R	**413246**
325W212M1	C-R	**413246**
325W214	C-R	**412040**
325W214-M1	C-R	**412040**
325W216	C-R	**471271**!
325W216-M1	C-R	**471271**!
325W22	C-R	450313
325W22-M1	C-R	450313
325W24	C-R	**473243**
325W24-M1	C-R	**473243**
325W26	C-R	**473245**!
325W28	C-R	**472636**!
325W28-M1	C-R	**472636**!
325W425	CONE	5169
325Z210	C-R	**411394**!
32602	WAYNE	450540
32603	WAYNE	455321
32605	C-R	455328*
32615	SPICE	6465
32617	GARLK	**413248**
326216M1	C-R	**471271**!
3262537	GMC	**411376**!
3262538	GMC	**416921**!
326283C91	IH	6635S
3262W-179	ROCKW	HU019A
32632	GARLK	**415483**
32635	US-EL	**415302**
326370	HYST	**470774**!
32640	C-R	5408
32644	GARLK	**415458**!
326475	MICH	455178=
326475	UNIVE	455178=
326487	UNIVE	**417504**
326488	MICH	**417504**
326499	UNIVE	**455032**!*
326500	MICH	**455032**!
326525	MICH	**455189**
326525	UNIVE	**455189***
32656	GARLK	**417343**!
326594	H-S	**417205**!
326601	GMC	1174
326601	GMC	38X52X8.5!
326645	JAC	**472258**
32669	DIVCO	240356
3267	PEERC	**410496**!
326703R91	IH	**471835**!
32676	GARLK	**417158**!
32683	GARLK	**416664**!
326871	JAC	**473454**
326877	Y-T	**455462**
326964	ACF	**471646**!
326964	H-S	**471646**!
32698	GARLK	**415984**!
326MA28-L	C-R	**472636**!
327026	H-S	**471442**!
32710	GARLK	**417316**!
32712	WAYNE	450044
32712M	IH	**473426**
327134R91	IH	**473228**!
32715	C-R	228250
32719	GARLK	**415960**
327203VG	SPG	327203V
327228R91	IH	**416888**!
327229R91	IH	**455480**!
327230R91	IH	**455480**!
327240R91	IH	7516
327245	WHITE	**472016**
327267	WHITE	**472394**
327303	NATL	**327303**
327305	NATL	**415725**!
327321R91	IH	**470712**!
327364R91	IH	240319
327380R91	IH	**416865**!
327381R91	IH	**415551**
32740	WAYNE	5751
327535	ALLCH	204013
3275S	SPG	3275=
327615	WHITE	**473215**!
3276SK	SPG	3276=
32770	GARLK	**415303**!
3277551	GMC	**415035**!
3277551	GMC	**415035**
32782	GARLK	**417344**!
32788A	KINGN	240731
3278VG0	SPG	**416271**=
32791	GARLK	**417158**!
327936H	NATL	227045
327M5	WHITE	**473367**
327M5	WHITE	**473367**!
327SSK	SPG	3276=
327W28	C-R	**472636**!
328062	JAC	**471766**!
3280S6649	GAL	JV1935=
3280S6650	GAL	JV1936=
328106R91	IH	**473224**=
32812	GARLK	**416921**!
3281204	GMC	**471570**!
32815	C-R	**455500**
32815	C-R	**455500**!
3282	PEERC	**417344**!
32820804	TROS	6380
32822	HYST	**55301S**
328220	TORO	410059
328220	TORO	**470380**!
32822B	HYST	**55301S**
328475	MICH	**417210**!
328475	UNIVE	**417210**!
328487	UNIVE	**417211**!
328488	MICH	**417211**!
328499	UNIVE	**416345**!
328499	UNIVE	455033
328500	MICH	**416345**!
328500	MICH	455033
328512	UNIVE	**415697**!
328512	UNIVE	455547
328525	MICH	**417366**!*
328525	UNIVE	**417366**!*
32875	HYST	**412040**
3289OS	JN-MN	55228=
328B21604	TROS	41075S
3292BG1	SPG	3292
329313C91	IH	**470682**
329551	SPICE	6808N
32968	HYST	**413247**!
32969	HYST	**415371**
32982	SPICE	6808N
329J-225	MACK	370033A
32QF259	MACK	370001A
32QJ-00127A	MACK	370003A
32QJ-131-A	MACK	370048A
32QJ-131-A	MACK	380048A
32QJ-133A	MACK	370033A
32QJ-156	MACK	370020A
32QJ-158-	MACK	370048A
32QJ-158-	MACK	380048A
32QJ-160	MACK	370048A
32QJ-160	MACK	380048A
32QJ-161	MACK	AR12+370033A
32QJ-164	MACK	370023A
32QJ-165	MACK	370036A
32QJ-165	MACK	370349A
32QJ-175	MACK	370006A
32QJ-179	MACK	370003A
32QJ-19301	MACK	370001A
32QJ-19302	MACK	370007A
32QJ-19303	MACK	370001A
32QJ-19320	MACK	370001A
32QJ-19321	MACK	370001A
32QJ-19322	MACK	370007A
32QJ-19325	MACK	370003A
32QJ-19326	MACK	370030A
32QJ-19327	MACK	370001A
32QJ-19329	MACK	370023A
32QJ-19336	MACK	370003A
32QJ-19337	MACK	**416892**
32QJ-19340	MACK	370001A
32QJ-19347	MACK	370007A
32QJ-19353	MACK	370003A
32QJ-19354	MACK	370003A
32QJ-19355	MACK	370003A
32QJ-19366	MACK	370001A
32QJ-19369	MACK	370023A
32QJ-19371	MACK	370001A
32QJ-19373	MACK	370003A
32QJ-19374	MACK	370023A
32QJ-19377	MACK	370006A
32QJ-19378	MACK	370006A
32QJ-225	MACK	370033A
32QJ-226	MACK	370048A
32QJ-226	MACK	380048A
32QJ-233	MACK	**415058**
32QJ-235	MACK	370065A
32QJ-237	MACK	370003A
32QJ-241	MACK	**416892**
32QJ-243	MACK	**415058**
32QJ-250	MACK	370023A
32QJ-29301	MACK	370007A
32QJ-29302	MACK	370001A
32QJ-29304	MACK	370023A
32QJ-29306	MACK	**471272**!
32QJ-29316	MACK	370023A
32QJ-29318	MACK	**416892**
32QJ-329	MACK	370023A
32QJ-330	MACK	370019A
32QJ110	MACK	**417492**
32QJ111C	MACK	**417172**
32QJ112B	MACK	370019A
32QJ115A	MACK	370011A
32QJ116B	MACK	**417172**
32QJ118A	MACK	**416892**
32QJ119	MACK	370033A
32QJ120	MACK	370011A
32QJ121A	MACK	370011A
32QJ122A	MACK	370011A
32QJ127A	MACK	370003A
32QJ130A	MACK	370007A
32QJ135A	MACK	**415058**
32QJ136A	MACK	370030A
32QJ140	MACK	370033A
32QJ228	MACK	370007A
32QJ238	MACK	**417172**
32QJ238A	MACK	**417172**
32QJ240	MACK	370069A
32QJ240	MACK	380069A
32QJ242	MACK	370019A
32QJ246	MACK	370002A
32QJ248	MACK	370033A
32QJ249	MACK	370037A
32QJ249	MACK	370338A
32QJ252	MACK	370048A
32QJ252	MACK	380048A
32QJ266	SPICE	370003A
32X17610A	JOHND	J1121
32X21486A	JOHND	**417343**!
32X22376A	JOHND	**417343**!
32X22480A	JOHND	**471684**!
32X22481A	JOHND	**470590**
32X38693A	JOHND	**417343**!
32X42X7AN(35)	ISP	32X42X7
32X42X8SC	TRSCM	32X42X8!
32X42X8TC	TRSCM	32X42X8!
32X45X7SC	TRSCM	32X45X7
32X45X7TC	TRSCM	32X45X7
32X46X6SC	TRSCM	32X46X6!
32X46X6TC	TRSCM	32X46X6!
32X47X7	NATL	3476
32X47X7SC	TRSCM	32X47X7!
32X47X7TC	TRSCM	32X47X7!
32X48X8SC	TRSCM	32X48X8!
32X48X8TC	TRSCM	32X48X8!
32X50X8	FORSH	32X50X8
32X50X8	NATL	223250
32X50X8	NATL	710415
32X50X8	SIMRT	32X50X8
32X50X8SC	TRSCM	32X50X8
32X50X8TC	TRSCM	32X50X8
32X51176A	JOHND	**471442**!
32X51176B	JOHND	**471442**!
32X52X11TC	TRSCM	1167
32X52X7SC	TRSCM	32X52X7!
32X52X7TC	TRSCM	32X52X7!
32X54X10SC	TRSCM	32X54X10
32X54X10TC	TRSCM	32X54X10
32X55X10	SIMRT	32X55X10
32X56X10SC	TRSCM	32X56X10!
32X56X10TC	TRSCM	32X56X10!
32X60X10SC	TRSCM	32X60X10
32X60X10TC	TRSCM	32X60X10
32X60X8SC	TRSCM	32X60X8!
32X60X8TC	TRSCM	32X60X8!
32X62X8SC	TRSCM	32X62X8
32X62X8TC	TRSCM	32X62X8
32X72X8SC	TRSCM	32X72X8
32X72X8TC	TRSCM	32X72X8
33	BL-KN	**471689**!
330-3002	STEM	730009
330-3005	STEM	730007
330-3006	STEM	730018
330-3007	STEM	733067
330-3008	STEM	730005
330-3009	STEM	733067
330-3011	STEM	730022
330-3012	STEM	730026
330-3013	STEM	733067
330-3014	STEM	733067
330-3016	STEM	730035
330-3019	STEM	730009
330-3022	STEM	730023
330-3023	STEM	730010
330-3024	STEM	730004
330-3025	STEM	730003
330-3028	STEM	730001
330-3031	STEM	730019
330-3034	STEM	730027
330-3035	STEM	730003
330-3037	STEM	730031
330-3039	STEM	730034
330-3040	STEM	730008
330-3041	STEM	730016
330-3042	STEM	730149
330-3044	STEM	730017
330-3045	STEM	730012
330-3046	STEM	730006

! Industrial Size/Type * Minor Width Difference

= The U.S. customer service number is 877-4-TIMKEN. The Canadian customer service numbers are 800-565-4927 (English) and 800-565-0438 (French-Canadian).

Mfr. No.	Name	Zero Duplication or Recommended Industrial
330-3056	*STEM*	730030
330-3060	*STEM*	730024
330-3066	*STEM*	730025
330-3077	*STEM*	357
330-3078	*STEM*	730029
330-3080	*STEM*	730003
330-3097	*STEM*	730149
330-3105	*STEM*	733105
330-3106	*STEM*	733106
330-3107	*STEM*	733107
330-3108	*STEM*	733108
330-3109	*STEM*	733109
330-3110	*STEM*	733110
330-3111	*STEM*	733111
330-3112	*STEM*	733112
330-3113	*STEM*	733113
330-3114	*STEM*	733114
330-3115	*STEM*	733115
330-S550	*UNIVE*	**417506**
3300-10131STLPD	*JN-MN*	509516
3300-11793STLPD	*JN-MN*	509516
330031	*SPICE*	**476470**
33004143	*CHRYS*	716445
33004681	*CHRYS*	321460
33009	*GARLK*	**417349**!
330113	*SPICE*	50199S!
330113	*SPICE*	6863S!
33017	*HYST*	**411394**!
33018	*GARLK*	**417350**!
3302025	*GMC*	**412473**!
33031	*CHERY*	**472015**!
33033	*C-R*	**455500***
33033	*GARLK*	**415995**!
33033	*GARLK*	**415995**!
330385	*NATL*	**330385**!
33040	*C-R*	**455500***
33041	*C-R*	**455500**
330414	*NATL*	**472311**!
330414	*SPG*	**472311**
33042	*GARLK*	**417351**!
330480	*SPG*	**323138**!
330487	*UNIVE*	**417967**!
330488	*MICH*	**417967**!
330499	*UNIVE*	**415034**!
330500	*MICH*	**415034**!
330525	*MICH*	**455191***
330525	*UNIVE*	**455191***
33053	*C-R*	**455500**
330532	*HYST*	456967V!
33070	*C-R*	710294
33070	*C-R*	84X100X12!*
33073	*C-R*	**416292***
330749	*SPG*	8421S
330749VG1	*SPG*	330749V
33077	*C-R*	**416292**
3308001	*BEHLN*	**471538**!
3308008	*BEHLN*	350909
3308008	*BEHLN*	**471224**!
330810	*WAGMA*	**413248**
330867H	*SPG*	**470898**!
330931	*WAGNR*	416362
3309507	*GMC*	**417196**!
331007C91	*IH*	**415991**!
331007C91	*IH*	**415991**
3310206	*PEERC*	**417344**!
331028	*PEERC*	**473228**
33103	*PEERC*	**417344**!
33104	*GARLK*	**417621**!
33107	*GEM*	417267
3310OS	*JN-MN*	**472164**!
3311035	*WOOL*	**415074**
331107	*SPG*	**331107N**
331107N	*NATL*	**331107N**!
331129	*SPG*	**473231**!
33114	*C-R*	**416292**
33116	*GARLK*	**416288**!
331210VG	*SPG*	331210V
33121608	*TROS*	455136
3312226	*CLARK*	9613S
331224	*WAGMA*	**417344**!
33122407	*TROS*	**410987**!
33122408	*TROS*	410686N
33122411	*TROS*	**410987**=
331228	*SPG*	331228H
33122808	*TROS*	450104
33123608	*TROS*	413479
33123608C	*TROS*	**411330**!
33123808	*TROS*	**411330**!
33125	*C-R*	**417491**
33126	*C-R*	**417491**
33127	*C-R*	**417491**
331301	*AT SU*	331301N
33136	*C-R*	**415085**!
33136	*C-R*	456648
33139	*C-R*	**415085**!
33139	*C-R*	456648
3313904	*GMC*	**472397**!
33140	*C-R*	**415085**!
33140	*C-R*	456648
33143	*GARLK*	**417171**!
331454SA	*TRSCM*	456648
3314727	*GMC*	**473211**!
3314728	*GMC*	**471868**
331495	*JAC*	**471413**!
3315623	*FULLE*	710211
3315624	*EATON*	712512
331572	*JAC*	**470954**!
3315763	*GMC*	**415219**
3315821	*GMC*	**472439**
33163	*JOHND*	**481864**
3317031	*GMC*	**417604**
33177	*C-R*	**415085**!
33177	*C-R*	456648
331808C91	*IH*	**471570**!
331810C91	*IH*	**471827**!
331817	*PEERC*	**473229**
33186	*C-R*	**416313**
33187	*GEM*	**474278**!
3318749	*GMC*	**417606**
3318750	*GMC*	**417210**!
331882H	*SPG*	**473459**
331882H	*TOWNR*	**473459**
33195	*C-R*	455024*
331G210	*C-R*	5924
331G28	*C-R*	44052
3320	*TLSMI*	**471538**!
332013	*PEERC*	**471766**!
332018	*PEERC*	**473228**
33202	*CUSH*	**472287**!
33202E	*CUSH*	**472287**!
3320340	*PEERC*	471686
332040	*PEERC*	**473010**
33206	*C-R*	**415085**!*
33209	*C-R*	455024
33209	*CRUSA*	17720
33210	*C-R*	455024
332104	*JAC*	**471649**!
332187	*SPG*	8804S=
33221	*GARLK*	**476470**
3322107	*GMC*	**473226**
33221608	*TROS*	**411376**!
33221611.25	*TROS*	**411376**!
332220135	*TROS*	**416444**
33222408	*TROS*	**416273**!
33222411.25	*TROS*	**416271**!
332224X06	*TROS*	**416271**!
33222808	*TROS*	**411245**!
33223207	*TROS*	**415449**!
33223208	*TROS*	**415449**!
33223208C	*TROS*	**415449**
33223210	*TROS*	**415449**!
33223212	*TROS*	**415449**!
33223608	*TROS*	**415302**
33223609	*TROS*	**415302**
33224008	*TROS*	**415483**!
33224408	*TROS*	**455434**
33224808	*TROS*	**416664**!
3323295	*GMC*	**417487**
33236	*GARLK*	**417181**!
33250	*C-R*	455612=
3325179	*GMC*	**415937**!
33254	*C-R*	100557
33254	*C-R*	4544V
332590	*SPG*	8750S
332590SK	*SPG*	8750S
33260	*C-R*	455612*=
33261	*TROS*	**450143**
332671	*WHITE*	**473228**!
33270A20	*AM HO*	**415116**
33275	*GARLK*	**417353**!
332860	*Y-T*	**415076**
3328698	*CUMMI*	100467
3328698	*CUMMI*	5732
3328759	*CUMMI*	5728
3328760	*CUMMI*	5734
3328761	*CUMMI*	5732
332901C91	*IH*	473451!
3329522	*GMC*	**471192**
3329BG	*SPG*	**473238**
332A23204	*TROS*	8975S
332A233X04.5	*TROS*	8975S
332FF216-L	*C-R*	6785
333009	*WAGMA*	**470898**
3333	*PEERC*	**415379**
3333	*PEERC*	**415379**!
33346	*GARLK*	**416294**!
33352	*VIC*	**473230**!
33353	*SPICE*	**473214**!
33353	*VIC*	**473214**!
333625	*PEERC*	**471354**!
33364	*GARLK*	**412473**!
333642	*PEERC*	**470712**!
333745C11	*ROCKW*	370023A
333750R91	*IH*	**417316**!
33376	*CRUSA*	17720
33379	*GARLK*	**417191**
333794R91	*IH*	**473214**!
333840R91	*IH*	**471643**!
333843R91	*IH*	**473214**!
33390	*C-R*	477055
33394	*GARLK*	**417354**!
333949R91	*IH*	**471267**!
333983	*WAGNR*	**416404**=
333996R91	*IH*	**415458**!
333996R92	*IH*	**415458**!
333998R91	*IH*	**472258**!
3339S	*SPG*	**417158**=
334001	*GMC*	**473210**
33405	*C-R*	228410
3340RC	*SUL*	**415034**!
33410	*C-R*	85X105X13
334111SS	*SPG*	334111
33412	*C-R*	716102
33413	*C-R*	716102
33415	*C-R*	85X105X13!
3341D	*GOODM*	**417511**
3341RC	*SUL*	**415645**!
3341RC	*SUL*	455104
33425	*C-R*	228520
33425	*C-R*	85X110X10
33425	*C-R*	85X110X12!
33426	*C-R*	85X110X12V
33427	*C-R*	228520
33427	*C-R*	85X110X12!
33428	*C-R*	85X110X12V
33429	*C-R*	228520
33429	*C-R*	85X110X12!
33434TA	*TRSCM*	**412473**
33440	*C-R*	85X115X12!
33440	*C-R*	85X115X13!*
33440	*TROS*	5711
33443	*C-R*	85X115X13
334510	*WHITE*	**471785**!
33454	*C-R*	228410
33454SA	*TRSCM*	**417191**
33454SA	*TRSCM*	456585
33454TA	*TRSCM*	**417191**
33460	*C-R*	710088
33460	*GARLK*	**416624**!
33464TA	*TRSCM*	**417354**!
334653	*PEERC*	**470712**!
334728	*CATER*	**473229**!
33473	*WAYNE*	**450332**
33484	*GARLK*	**415991**!
33484	*GARLK*	**415991**
33489	*SPICE*	**471835**!
33499	*GARLK*	**417196**!
334F212-L	*C-R*	**412119**!*
334FF24	*C-R*	**413469**!
334HMS212-T8	*C-R*	**412119**!
334HMS220	*C-R*	**412871**!
334N212	*C-R*	**412119***
334N212-T8	*C-R*	**412119***
3350BP	*SPG*	3369=
3350RB	*SPG*	3350
33511	*GARLK*	**415437**
335131	*C-R*	450111
33516008	*TROS*	**417474**
335164	*JAC*	**471737**
335196	*GMC*	3173
335196	*GMC*	710928
33519959	*NOK*	135X160X13
3351OS	*JN-MN*	**471141**!
33520808	*TROS*	**415349**
335210	*C-R*	**410694**!
335210A	*HARWA*	33X52X8.5
335210M1	*C-R*	**410694**!
335212	*C-R*	**412119**!
335212	*FAIRB*	**412119**!
335212	*GR-DV*	**412119**!
335212K	*SUL*	**412119**!
335212M1	*C-R*	**412119**!
335212T8	*C-R*	**412119**!
335214	*C-R*	**411500**
335216	*C-R*	**410496**!
335216M1	*C-R*	**410496**!
33522	*C-R*	450532
335220	*C-R*	**412871**!
335220M1	*C-R*	**412871**!
33522808	*TROS*	**417073**
33523207.5	*TROS*	**415001**!
33523208	*TROS*	**415001**!
33523208C	*TROS*	**415001**!
33523210	*TROS*	**415001**!
33524	*C-R*	**413469**!
33524	*HARN*	**413469**!
33524007.5	*TROS*	**417079**
33524808	*TROS*	**417484**!

! Industrial Size/Type * Minor Width Difference

= The U.S. customer service number is 877-4-TIMKEN. The Canadian customer service numbers are 800-565-4927 (English) and 800-565-0438 (French-Canadian).

Mfr. No.	Name	Zero Duplication or Recommended Industrial
33524810	TROS	417484!
33524M1	C-R	413469!
33525	C-R	412943
33525M1	C-R	412943
33526	C-R	412943
33526M1	C-R	412943
33527	C-R	50631
33528	C-R	411253!
33528	FAIRB	411253!
33528	GR-DV	411253!
33528M1	C-R	411253!
33528M1	CR-CF	411253!
335447	GMC	5070
33555	C-R	85X120X12
33557	C-R	85X120X12!
3355OS	JN-MN	450165
3355OS	JN-MN	471801!
33563	C-R	85X120X12!
33568	GARLK	416332!
33570	C-R	85X125X12
33580	GARLK	415937!
33585	C-R	85X130X13
33590	C-R	85X130X13
33593	C-R	85X130X13
3359RC	SUL	415991
3359RC	SUL	455146!
335A212	C-R	412119!*
335B212	C-R	412119*
335B220	C-R	412871!
335B28	C-R	411253!*
335BM28	C-R	411253!
335F212	C-R	412119!*
335F216	C-R	410496!*
335FF220	C-R	412871!
335FM212	C-R	412119!*
335FM216	C-R	410496!*
335G216	C-R	40496S=
335G24	C-R	40097S
335HD212	C-R	40101S
335HD220	C-R	412871!
335W210	C-R	410694!*
335W212	C-R	412119!
335W212-M1	C-R	412119!
335W214	C-R	411500*
335W214-M1	C-R	411500*
335W215	C-R	50560
335W216	C-R	410496!
335W216-M1	C-R	410496!
335W22	C-R	450532*
335W220	C-R	412871!
335W220-M1	C-R	412871!
335W24	C-R	413469!*
335W24-M1	C-R	413469!*
335W26	C-R	412943*
335W27	C-R	50631
335W28	C-R	411253!
335W28-M1	C-R	411253!
33601	GARLK	417355!
336013R91	IH	417191
336018R91	IH	330385!
336052R91	IH	471255!
336053R91	IH	471255!
336090	JAC	471984
33610	GATES	35126
33610	GATES	427RR
336106R91	IH	450311
336107R91	IH	471652
33613	GARLK	416125!
33617	DEXTR	473235
33617	GATES	35292
33617	KELSE	473235
33617	LIGET	473235
3362	HYST	473446
336212J	SUL	412119!
336274R91	IH	471692!
336275R91	IH	471692=
336276R91	IH	415995!
336276R92	IH	415995!
33628	C-R	5128N
3362RC	SUL	473236!
33633	ACF	471341!
33643	GATES	35402
33643	GATES	427RR
33645	C-R	415442
33645	C-R	55442
33646	GARLK	416041
33650	C-R	415442
33650	C-R	55442
33653	ACF	471341!
33653	HYST	471341!
336537	WAGMA	416154!
33654	C-R	475996H=
33655	GARLK	415379
33661	GATES	35524
33662	C-R	416294!
336626R91	IH	472636
33663	C-R	416294!
336631R91	IH	8481=
336631R92	IH	8481=
33664	C-R	416294!
336644	PEERC	476838!
336648	PEERC	472397!
33665	C-R	416294!
336652	PEERC	473228
336656	PEERC	417262!
336659	PEERC	412119!
33666	C-R	416294!
33667	C-R	417491
33667	GARLK	417205!
33669	C-R	475996H=
33670	C-R	412473!
33682	C-R	412473!
33682	GARLK	416339
336862	JAC	470954!
336863	JAC	471442!
33690	C-R	412473!
33691	C-R	412473!
336918	ALLCH	205017
336962	JAC	471267!
33698	C-R	412473!
33699	C-R	412473
336C124	C-R	210945
336F28	C-R	412920!
336WL216-Y23	C-R	470605!
33700	C-R	412473*
33700	C-R	412473!
33701	C-R	412473*
33701	C-R	412473!
33703	C-R	412473!
33704	C-R	412473!
33705	C-R	412473!
33706	C-R	412473!
33707	C-R	412473!
33711	C-R	412473!
33711	C-R	412473*
337111	SPICE	411962=
337111	VIC	411962=
33712	C-R	412473*
33712	C-R	412473!
3371222	GMC	415035
337128	C-R	410524
337128M1	C-R	410524
337131	C-R	450497=
33716	C-R	412473!
33717	C-R	412473!
3372	C-R	410102
33721	GARLK	417211!
337210	C-R	450133
337212	C-R	413247!
337212M1	C-R	413247!
337214	C-R	413478
337214M1	C-R	413478
337216	C-R	470605!
337216M1	C-R	470605!
33722	C-R	450343
337220M1	C-R	413248
33723	C-R	412473!
337240	PEERC	471766!
33725	C-R	412473!
33728	C-R	412920!
33728M1	C-R	412920!
3372K	FORD	410102
3372M1	C-R	410102
33733	GARLK	416345!
33735	C-R	417191*
33735	C-R	455165!
33736	C-R	417191
33736	C-R	455165!
3373OS	JN-MN	55301S*
33740	C-R	417191
33740	C-R	455165!
33741	C-R	417191
33741	C-R	455165!
33741	CHERY	471766!
33741	SPICE	471795
33742	CHERY	471272!
3374299	GMC	450332
33745	GARLK	415697!
33746	C-R	417191
33746	C-R	455165!
33747	C-R	417191
33747	C-R	455165!
3374775	GMC	471765!
33748	C-R	417191
33750	C-R	417191
33750	C-R	456585
337501	WHITE	471821!
33755	C-R	417191
33756	C-R	417191
33757	C-R	417191
33757	C-R	455165!
337577	WHITE	412871!
33758	C-R	417191
337619	PEERC	473228
33763	GARLK	417366!
3376315	GMC	417497
337647	PEERC	471766!
33768	GEM	471267!
33769	C-R	417191
33769	C-R	456585
3376RC	SUL	417488!
33771	WAYNE	50490=
337711C91	IH	456618
337711C92	IH	456618
33772	C-R	417354!*
33772	WAYNE	471192
33773	C-R	417354!*
33774	WAYNE	473211!
33777	C-R	417354!
33778	C-R	417354!
33778	SPICE	472394
3377RC	SUL	417354!
33780	C-R	417354!
33781	C-R	417354!
33783	HYST	418028
33783	HYST	455137!
33784	C-R	417354!*
33792	C-R	417354!
3379282	GMC	416654!
3379283	GMC	473473
33793	C-R	417354!
33793D	IH	416153!
33795	C-R	417354!
3379OS	JN-MN	416158
337FF214-L	C-R	413478
337W128	C-R	410524*
337W2	C-R	410102*
337W2-M1	C-R	410102*
337W210	C-R	472287!*
337W212	C-R	413247!
337W212-M1	C-R	413247!
337W214	C-R	413478*
337W216	C-R	470605!
337W216-M1	C-R	470605!*
337W22	C-R	450343*
337W28	C-R	412920!
337W28-M1	C-R	412920!
33807	C-R	455249!*
3380RRR	SPG	710008
3381	UNIVE	6754S=
33812	C-R	455249!
33813	C-R	455249!
33816	C-R	55431=
3381858	GMC	417501
33821	C-R	416321
33821	CHERY	473231!
3382355	GMC	415379!
3382355	GMC	415379
33824	C-R	415025
33825	C-R	415025*
33826	C-R	415025*
3382835	GMC	416077
33834	C-R	415025
338348R91	IH	411376!
338349R91	IH	411376!
338362	JAC	472397!
338366R91	IH	481073
33837	C-R	415025*
33839	C-R	415025
338394R91	IH	471564
33842	C-R	415025
33843	C-R	415025
338490R91	IH	472070
338491R91	IH	470565=
338492R91	IH	473467=
338493R91	IH	415995!
338494R91	IH	412473!
338495R91	IH	415379=
338496R91	IH	415458=
338497R91	IH	415437!
338498R91	IH	455040N=
338499R91	IH	455685N=
3385	UNIVE	417353!
338510R91	IH	415449=
338511R91	IH	415995=
338512R91	IH	417354!
338513R91	IH	415379=
33853	C-R	415025
338540R91	IH	415192N
338542R91	IH	5302=
338549R91	IH	416404!
338588R91	IH	476470!
338588R91	IH	476470
338589R91	IH	472185!
338590R91	IH	470380!
3386	IDECO	415138!
33860	C-R	416327
33861	C-R	710235

! Industrial Size/Type * Minor Width Difference

= The U.S. customer service number is 877-4-TIMKEN. The Canadian customer service numbers are 800-565-4927 (English) and 800-565-0438 (French-Canadian).

Mfr. No.	Name	Zero Duplication or Recommended Industrial
3386221	*GMC*	**416332**!
33866	*C-R*	416327*
3387168	*GMC*	**474278**!
338725C91	*IH*	**416706**!
3387499	*GMC*	**471138**!
338815R91	*IH*	**471785**!
338817R91	*IH*	**417351**!
338874R91	*IH*	**472924**!
338875R91	*IH*	**471224**!
338877R91	*IH*	476424N
3388840	*GMC*	**473474**
338899R91	*IH*	**473231**!
338904R91	*IH*	**415234**!
338F220	*C-R*	**410708**
338FF220-L	*C-R*	**410708**
338YR220	*C-R*	**410708**
3391OS	*JN-MN*	450193=
33929	*GEM*	5976S
3393RC	*SUL*	**415938**
3394333	*PEERC*	**473010**
3394345	*PEERC*	**473228**
33949	*DENCO*	**415991**
33949	*DENCO*	455146!
3395	*NATL*	352444
33950	*DENCO*	**415960**!
339617	*WAGMA*	**412861**
339681	*HYST*	**415138***=
339814	*WHITE*	**471553**!
3398B	*JN-MN*	**417316**!
3398OS	*JN-MN*	**417316**!
3399	*LABEQ*	**471760**
339965C1	*IH*	5065
339B22407	*TROS*	**415857**!
33E1	*OTISE*	455591=
33E2	*OTISE*	455592
33E4	*OTISE*	455596=
33MAK1	*OTISE*	**470898**
33MBP	*OTISE*	**416107**!
33MBP	*OTISE*	455073
33MCJ1	*OTISE*	**472179**
33MHH1	*OTISE*	410930=
33X50X12SC	*TRSCM*	33X50X12!
33X50X12TC	*TRSCM*	33X50X12!
33X52X6SC	*TRSCM*	33X52X6
33X52X6TC	*TRSCM*	33X52X6
33X52X8.5	*SIMRT*	33X52X8.5
34	*BL-KN*	**473243**
340-4002	*STEM*	HU019A
340-4005	*STEM*	HU005A
340-4006	*STEM*	HU008A
340-4007	*STEM*	HU007A
340-4008	*STEM*	HU008A
340-4009	*STEM*	HU009A
340-4009	*STEM*	HW009A
340-4011	*STEM*	HU011A
340-4012	*STEM*	HU012A
340-4013	*STEM*	HU013A
340-4014	*STEM*	HU014A
340-4019	*STEM*	HU019A
340-4024	*STEM*	HU024A
340-4025	*STEM*	HU036A
340-4028	*STEM*	HU028A
340-4029	*STEM*	HU028A
340-4031	*STEM*	HU031A
340-4034	*STEM*	HU034A
340-4036	*STEM*	HU036A
340-4037	*STEM*	HU037A
340-4039	*STEM*	HU039A
340-4042	*STEM*	HU042A
340-4046	*STEM*	HU009A
340-4049	*STEM*	HU149A
340-4050	*STEM*	HU042A
340-4057	*STEM*	HU057A
340-4058	*STEM*	HU058A
340-4065	*STEM*	HU065A
340-4066	*STEM*	HU066A
340-4070	*STEM*	HU070A
340-4075	*STEM*	H075
340-4091	*STEM*	HU024A
340-4092	*STEM*	HU036A
340-4093	*STEM*	HU110A
340-4095	*STEM*	HU009A
340-4096	*STEM*	HU066A
340-4098	*STEM*	HU009A
340-4099	*STEM*	HU036A
340-4149	*STEM*	HU149A
340-4249	*STEM*	HU110A
3400	*LABEQ*	**415449**!
34008	*NEWPR*	2465
340098	*VICK*	**417600**
3400D5	*WHITE*	**410987**!
34010	*GARLK*	**415035**
340106C91	*IH*	415060
340106C91	*IH*	455060
340106C92	*IH*	415060
340106C92	*IH*	455060
340107C91	*IH*	**415351**!
340107C92	*IH*	**415351**!
340141	*NATL*	**470954**!
340179C91	*IH*	370021A
340188	*WHITE*	**417316**!
34020	*EATON*	**416865**!
34020807.5	*TROS*	**455080**
340211	*NATL*	**471643**!
34021607.5	*TROS*	**415234**!
34021609.5	*TROS*	**415234**!
34022407	*TROS*	**410825**
34022411.25	*TROS*	**410825**
34022805.75	*TROS*	3210
34023206	*TROS*	**416273**
34023207.5	*TROS*	**416273**!
34023208	*TROS*	**416273**!
34023607.5	*TROS*	**415988**
34024006	*TROS*	**415458**!
34024007.5	*TROS*	**415458**!
34024008	*TROS*	**415458**!
34024008C	*TROS*	**415458**!
34024011.25	*TROS*	**415458**!
34024012	*TROS*	**415458**!
34024807.5	*TROS*	**415984**!
34024809.5	*TROS*	**415984**!
34025	*GARLK*	**415035**
34027	*SPICE*	5778
34027-1	*SPICE*	5778
3402RC	*SUL*	**417191**
3402RC	*SUL*	456585
3402S	*SPG*	3402
34035	*GARLK*	**417356**!
340364	*SPG*	**350364**
340398	*NATL*	**471267**!
340412R91	*IH*	**410708**
340413R91	*IH*	**471504**
340430	*WHITE*	**450593**!
340435	*NATL*	240435
340435	*NATL*	**350435**
34046	*EATON*	370021A
340541	*WHITE*	**474253**!
34055	*GARLK*	**417357**
3405RC	*SUL*	**471466**!
3406	*SPG*	1973
3406	*SPG*	48X65X10!
3406RC	*SUL*	**471466**!
340734	*NATL*	343186
34075	*GARLK*	**416130**!
34082	*EATON*	6532S=
340876	*WHITE*	**417159**
3408RC	*SUL*	**470712**!
34090	*EATON*	6532S=
340927C91	*IH*	**415085**!
340927C91	*IH*	456648
340928C91	*IH*	**455008**
340929C91	*IH*	**415437**
340929C91	*IH*	**415437**!
340980SSR	*SPG*	340980
340A16006	*TROS*	6074
340D2	*WHITE*	6638S
340D4	*WHITE*	**472636**!
341079C91	*IH*	415137!
341079C91	*IH*	**418028**
3411035	*WOOL*	**473473**
34115	*C-R*	228700
34116	*C-R*	710219
3411WA	*OSHKO*	55353
34120	*C-R*	228700
341293	*WAGMA*	416112
3414	*EATON*	50075=
3415	*EATON*	**473215**!
3416	*EATON*	470059
3416	*EATON*	**470380**!
3417	*EATON*	**411253**!
341707	*WHITE*	**470898**!
3418494	*CHRYS*	3103!
3418495	*CHRYS*	3103!
34188	*EATON*	**415085**!
34188	*EATON*	456648
341986R91	*IH*	5347*=
341SR-52	*MACK*	370001A
341SR31	*MACK*	370021A
342009	*SPG*	**472397**!
34202	*CUSH*	**471553**!
342055	*WHITE*	**471354**!
34206	*SPICE*	8430S
34206	*VIC*	8430S
342111	*DEVIL*	**473229**
342118	*WHITE*	**417484**!
342298	*WHITE*	**410102**
3422OS	*JN-MN*	**471692**!
342346	*WHITE*	**471689**!
342357	*HYST*	417537
34240	*C-R*	**418029**!
34241	*C-R*	**418029**!
34249	*C-R*	**418029**!
3424OS	*JN-MN*	450311
34250	*C-R*	**418029**!
34255	*GARLK*	416556!
34255	*GARLK*	**472157**
34256	*C-R*	**418029***!
34256	*C-R*	**418029**!
342637	*WHITE*	**415041**
34266	*C-R*	**418029**!
34270	*LEECE*	**473238**
34275	*GARLK*	**415196**!
34276	*C-R*	**417492**
34277	*C-R*	**417492**
34279	*C-R*	**417492**
3427RC	*SUL*	**470530**!
34282	*C-R*	**417492**
34283	*C-R*	**417492**
34284	*C-R*	**417492**
3428XA	*SPG*	3428
34292	*C-R*	**417492**
34293	*C-R*	**417492**
34294	*CHERY*	**473245**!
34295	*CHERY*	**455151**
34297	*GARLK*	**416891**!
343-4009	*STEM*	HU009A
343-4009	*STEM*	HWF009A
343-4011	*STEM*	HU011A
343-4012	*STEM*	HU012A
343-4013	*STEM*	HU013A
343-4014	*STEM*	HU014A
343-4019	*STEM*	HU019A
343-4022	*STEM*	HU019A
343-4024	*STEM*	HU024A
343-4025	*STEM*	HU036A
343-4028	*STEM*	HU028A
343-4029	*STEM*	HU028A
343-4031	*STEM*	HU031A
343-4034	*STEM*	HU034A
343-4036	*STEM*	HU036A
343-4042	*STEM*	HU042A
343-4050	*STEM*	HU066A
343-4057	*STEM*	HU057A
343-4058	*STEM*	HU058A
343-4065	*STEM*	HU065A
343-4066	*STEM*	HU066A
343-4075	*STEM*	H075
343-4091	*STEM*	HU024A
343-4092	*STEM*	HU036A
343-4093	*STEM*	HU110A
343-4094	*STEM*	HU009A
343-4096	*STEM*	HU066A
343-4098	*STEM*	HU110A
343-4101	*STEM*	HU149A
343-4103	*STEM*	HU009A
343-4111	*STEM*	HU028A
343-4112	*STEM*	HU036A
343-4113	*STEM*	HU110A
343-4114	*STEM*	HU066A
343-4115	*STEM*	HU028A
343-4118	*STEM*	HU110A
343-4121	*STEM*	HU066A
343-4122	*STEM*	HU009A
343-4124	*STEM*	HU024A
343-4125	*STEM*	HU024A
343-4126	*STEM*	HU009A
343-4128	*STEM*	HU024A
343-4129	*STEM*	HU028A
343-4141	*STEM*	HU024A
343-4146	*STEM*	HU065A
343-4147	*STEM*	HU149A
343-4159	*STEM*	HU036A
343-4165	*STEM*	HU034A
343-4174	*STEM*	HU110A
343-4183	*STEM*	HU036A
34300	*C-R*	**417492**
34301	*C-R*	**417492**
34302	*GARLK*	**416135**!
34304	*DENCO*	**470625**!
34317H	*DIA*	**471224**!
34317W	*DIA*	240151
34319	*SPICE*	**415960**
34319	*VIC*	**415960**
34320H	*IH*	**473444**
343229	*WHITE*	**473464**
343229	*WHITE*	**473464**!
34325	*C-R*	**417492**
3432691	*CHRYS*	5124
34336	*C-R*	**417493***
34338	*C-R*	**417493**!
3433B	*JN-MN*	**472179**
34341	*C-R*	**417493**
34342	*C-R*	**455026**
343499	*WHITE*	**471549**!
343500	*WHITE*	**471137**
343539R91	*IH*	**471224**!
343548R91	*IH*	**471255**!
34364	*C-R*	**417493**

! Industrial Size/Type * Minor Width Difference

= The U.S. customer service number is 877-4-TIMKEN. The Canadian customer service numbers are 800-565-4927 (English) and 800-565-0438 (French-Canadian).

Mfr. No.	Name	Zero Duplication or Recommended Industrial
34370	C-R	**455858**
343715R91	IH	**471692**!
34383	C-R	**455858***
34384	C-R	370037A
34385	C-R	**455858**
34386	C-R	370047A
343861	PEERC	470328
343861	PEERC	**481213**!
343862	PEERC	**472311**!
34387	C-R	370047A
34387	C-R	5649
343899	AUTOZ	13367
3438N	WMG	**471766**!
3438R	SPG	**471766**=
34398	C-R	417494*
3439R	SPG	3439N=
343CS116	C-R	6922=
34400	C-R	417494
34401	C-R	417494
34407	C-R	**455026***
3440VG3	SPG	**415458**
34410	C-R	**455026***
34411	C-R	**455026***
344151	AUTOZ	12473
344153	AUTOZ	16200
344154	AUTOZ	16201
344155	AUTOZ	16202
344156	AUTOZ	16203
344157	AUTOZ	16204
344158	AUTOZ	16205
344159	AUTOZ	16206
344161	AUTOZ	16208
344162	AUTOZ	16209
344163	AUTOZ	16210
344164	AUTOZ	16211
344165	AUTOZ	16212
344166	AUTOZ	16213
344167	AUTOZ	16214
344169	AUTOZ	16250
344170	AUTOZ	16251
344171	AUTOZ	16252
344172	AUTOZ	16253
344173	AUTOZ	16254
344174	AUTOZ	16255
344175	AUTOZ	16256
344177	AUTOZ	16257
344178	AUTOZ	16258
344179	AUTOZ	16259
344180	AUTOZ	16260
344181	AUTOZ	16261
344182	AUTOZ	16262
344183	AUTOZ	16263
344185	AUTOZ	16264
344186	AUTOZ	16265
344187	AUTOZ	16266
344188	AUTOZ	16300
344189	AUTOZ	16301
34419	SPICE	**473228**
34419	VIC	**473228**
344190	AUTOZ	16302
344191	AUTOZ	16303
344192	SPICE	**473228**
344193	AUTOZ	16304
344194	AUTOZ	16305
344195	AUTOZ	16306
344196	AUTOZ	16307
344197	AUTOZ	16308
344198	AUTOZ	16309
344199	AUTOZ	16310
3441VG1	SPG	**416921**
344201	AUTOZ	16311
344202	AUTOZ	16312

Mfr. No.	Name	Zero Duplication or Recommended Industrial
34422	C-R	**455026**
344278	GMC	**473204**
34438	C-R	**455471***
34445	C-R	**455471***
34449	CASE	**471570**!
3444E	GOODM	**415196**!
344531C91	IH	**472397**!
34455	GARLK	**416888**!
34470	C-R	455472=
34474SA	TRSCM	**455858**
34475	GARLK	**416153**!
3447S	SPG	3447
3447SAR	SPG	6815
344867	GUY	**471224**!
3448OS	JN-MN	**416271**!
34498	GARLK	**416892**!
3449B	JN-MN	**416654**!
344G28	C-R	41075S
344RC	SUL	**455032**!
345208A	HARWA	34X52X8
345303	WHITE	45637S
34531	WAYNE	**473244**
345327	WHITE	**473215**!
34539	HYST	**416158**
3455	NATEN	**417546**!
3455B	JN-MN	**415991**
3455B	JN-MN	455146!
3458S	GIB	**473235**!
3459952	CHRYS	370001A
3459952	CHRYS	380001A
3459S	GIB	**471870**!
34610	C-R	3772
34610	C-R	5287
34611	C-R	3772
34611	SPICE	442380
34612	SPICE	**416273**!
34612	VIC	**416273**!
34615	SPICE	9316
3461793	GMC	4175
3461895	CHRYS	6960
34620	C-R	88X110X12
346210A	HARWA	34X62X10!
34623	C-R	88X110X12!
34625	GARLK	**415138**!
34631	CATER	**471765**!
34631	TMTR	**471765**!
34634	GEM	240356
34645	GARLK	**417247**!
34650	C-R	55309=
34650	C-R	88X115X12!
346738R91	IH	100494
346738R91	IH	**476470**!
346812R91	IH	**471692**!
346FF2-L	C-R	8139
34700	C-R	2055
347122R2	IH	JV1976=
347150C91	IH	**417365**
34718	EATON	**470565**!
347224	C-R	480491*
347235R91	IH	**471785**!
347245R91	IH	**471785**!
34739	WAYNE	**471787**!
34744	WAYNE	**471553**!
347451	GMC	**473313**!
347497	WHITE	**471267**!
347568R91	IH	**473239**!
347569R91	IH	**473239**!
347570R91	IH	**415138**!
347583R91	IH	**415234**!
347652R91	IH	**417487**!
347652R91	IH	**417487**
347804R91	IH	**415138**!

Mfr. No.	Name	Zero Duplication or Recommended Industrial
347841R1	IH	JX1136
347842R1	IH	JX1190
347913R1	IH	JX1002=
347913R91	IH	JX1002=
347W212	C-R	**410987**!
348-X414	C-R	5965
3480	DICO	204020
3480	DICO	204505!
34820	HYST	**415007**
348212	C-R	**410987**!
348212M1	C-R	**410987**!
348214	C-R	450104
348214M1	C-R	450104
348218	C-R	413479
348218M1	C-R	413479
348219	C-R	**411330**!
348219L	C-R	**411330**!
348220	C-R	**450412**
348220M1	C-R	**450412**
34823208	TROS	**455079**!
34823608	TROS	**417481**
34824008	TROS	**417343**!
34824308	TROS	7780
34824408	TROS	**455151**
34824804	TROS	46997S
34824808	TROS	**417316**!
34824810.25	TROS	**417316**!
34824812	TROS	**417316**!
34825208	TROS	**455005**
34825608	TROS	**471344**
34825610	TROS	**417344**!
34825610.25	TROS	**417344**!
34825616	TROS	**417344**!
34826008	TROS	**416956**
34828	C-R	455136
34828M1	C-R	455136
34830006	TROS	**417349**!
34830008	TROS	**417349**
34834	C-R	**455858**
34835	C-R	710029
34844	C-R	45525S
34848	C-R	446927!
34848	C-R	45525S
34857	C-R	**418029**!
34860	C-R	**416624**!*
34861	C-R	**416624**!*
34862	C-R	**416624**!
34863	C-R	**416624**!
34864	C-R	55309*=
34865	C-R	**416624**!*
34866	C-R	**416624***=
34866	SPICE	**416624**=
34867	C-R	**416624**!*
34867	SPICE	**416624**!
34868	C-R	**416624**!*
34869	C-R	**416624**!*=
34871	C-R	55309*=
34872	C-R	**416624**!
34874	C-R	**416624**!
34875	C-R	**416624**!
34876	C-R	**416624**!
34877	C-R	**416624**!
34878	C-R	415899N
34878	C-R	**416624**
3488	CR-CF	**411253**!
3488	MURPH	**473446**
34883	C-R	**415991***=
34884	C-R	415899N
34884	C-R	**416624**
348848C91	IH	**473228**
348849C91	IH	9316
34885	C-R	9339S

Mfr. No.	Name	Zero Duplication or Recommended Industrial
34886	C-R	**415991**
34886	C-R	455146!
34887	C-R	**415991***
34888	C-R	**415991**
34888	C-R	455146!
34889	C-R	415146!
34889	C-R	**415991**
3490	C-R	5965
34891	C-R	**415991**!
34891	C-R	**415991**
34892	C-R	**415991***=
34893	C-R	**415991**
34893	C-R	455146!
34895	C-R	**415991**
34895	C-R	455146!
34896	C-R	**415991**
34896	C-R	455146!
34897	C-R	**415991**
34897	C-R	**415991**!
34899	C-R	415146!
34899	C-R	**415991**
348W212	C-R	**410987**!
348W212-M1	C-R	**410987**!
348W214	C-R	450104
348W218	C-R	413479
348W220	C-R	**450412**
348W28	C-R	455136
348W28-M1	C-R	455136
34900	C-R	**415991**
34900	C-R	455146!
34903	C-R	**415991**
34903	C-R	455146!
34904	C-R	415146!
34904	C-R	**415991**
34906	C-R	**415991**
34907	C-R	**415991**
34907	C-R	455146!
34908	C-R	**415991**!
34908	C-R	**415991**
34909	C-R	**415991**
34909	C-R	455146!
34912	C-R	**415991**
3491250	CHRYS	323126
3491349	CHRYS	PSK-1
34918	C-R	**415991**
34918	C-R	455146!
34919	C-R	**415991**
34919	C-R	455146!
34925	C-R	**415991**!
34925	C-R	**415991**
349295C1	IH	456744N
3492V	SPG	3492
34931	C-R	415146!
34931	C-R	**415991**
34934	C-R	**415991**
34934	C-R	**415991**!
34945	C-R	**415991**=
34955	C-R	345146*
3496234	CHRYS	**470954**
3496557	CHRYS	**417158**!
34967	C-R	345146
34968	SPICE	**473229**!
34971	C-R	370131A
34972	C-R	370132A
34973	C-R	**415991**
34973	C-R	455146!
34974	C-R	**415991**
34974	C-R	455146!
3497490	CHRYS	453510
34975	C-R	370132A
34978	C-R	**417196**!
34980	C-R	370132A

! Industrial Size/Type * Minor Width Difference

= The U.S. customer service number is 877-4-TIMKEN. The Canadian customer service numbers are 800-565-4927 (English) and 800-565-0438 (French-Canadian).

Mfr. No.	Name	Zero Duplication or Recommended Industrial
34982	C-R	417196!
34983	C-R	417196!
34985	C-R	417196!*
34985	VIC	417196!
34990	C-R	417196!
34991	C-R	417196!
34992	C-R	417196!
34993	C-R	417196!
34994	C-R	370132A
34995	C-R	417196!
34996	C-R	2055
34999	C-R	415437
349A216	C-R	415449!
349AM216	C-R	415449!
349AMM216	C-R	415449!
349B216	C-R	415449!
349BM212	C-R	416271!*
349BMZ216	C-R	415449!
349E216	C-R	415449!
349M212-L	C-R	416271!*
349W212	C-R	410987!
349W212	C-R	450686
34X45X8SC	TRSCM	34X45X8
34X45X8TC	TRSCM	34X45X8
34X52X8	SIMRT	34X52X8
34X52X8SC	TRSCM	34X52X8
34X52X8TC	TRSCM	34X52X8
34X54X9SC	TRSCM	34X54X9
34X54X9TC	TRSCM	34X54X9
34X55X9SC	TRSCM	34X55X9
34X55X9TC	TRSCM	34X55X9
34X62X10	SIMRT	34X62X10!
34X62X10SC	TRSCM	34X62X10!
34X62X10TC	TRSCM	34X62X10!
35	BL-KN	413246
3500	GEM	323138!
35000	C-R	380001A
35000	C-R	415437
35001	SPG	415001!
35003S	SPG	415458!
3500495	WHITE	450400
35006	SPG	417344!
35009N	NATL	415960!
35010	C-R	415437*
35011	C-R	415437!
35011	C-R	415437
35011	SPG	416921!
350112	C-R	455292=
35012	C-R	415437*
35012N	NATL	416654
35013	C-R	476424N
350140	NATL	471413!
35015	C-R	415437
35016	C-R	476424N
35016N	SPG	416288
35017	C-R	415437*
35018	C-R	415437*
35019	C-R	415437
3501V	SPG	3501V
35020	C-R	415437*
350203	NATL	481443!
35021	C-R	415437
350210	C-R	416444
350210M1	C-R	416444
350212	C-R	416271!
350212	GR-DV	416271!
350212M1	C-R	416271!
350212Q6	C-R	416271!
350214	C-R	411245!
350214	CABOT	411245!
350214	GR-DV	411245!
350214M1	C-R	411245!
350215	NATL	471646!
350216	ALLCH	415449!
350216	C-R	415449!
350216	CABOT	415991
350216	CABOT	455146!
350216	CLARK	415449!
350216	GR-DV	415449!
350216K	GOODM	415449!
350216M1	C-R	415449!
350218	C-R	415302
350218	CLARK	415302
350218M1	C-R	415302
35022	C-R	415437
350220	C-R	415483!
350220M1	C-R	415483!
350220T8	C-R	415483!
350222	C-R	455434
350224	C-R	416664!
350224M1	C-R	416664!
35023	C-R	415437
350230	SPG	471689!
35028	C-R	411376!
35028	HYST	55309=
35028M1	C-R	411376!
35029	C-R	415437*
35029	C-R	415437!
35029	HYST	417181!
35030	C-R	415437
35030	C-R	415437!
35030	GARLK	415725!
35030	HYST	417605
350319	NATL	481163!
35033	C-R	417159
35034	SPG	415034!
35035	AMC	471570!
35035	SPG	415035
350355	NATL	471538!
35036	C-R	415437
350363	NATL	473234!
350385	NATL	330385!
3503S	SPG	3503=
35040	C-R	476424N
35040	GARLK	415725!
35042	C-R	415437*
350435	WMG	50435
35045	C-R	415437*
3504679	GMC	6064
350476	ADAMS	471750!
35048	C-R	415437!
35048	C-R	415437
35049	C-R	415437!
35049	C-R	415437
350493	WHITE	450400
350502	ADAMS	455151
350502	LETN	455151
350503	ADAMS	472439
350504	ADAMS	471224!
350504	LETN	471224!
350504	WABCO	471224!
350509	NATL	15X25X7
35051	SPG	415371
350535	ADAMS	417316!
350535	LETN	417316!
350537	WHITE	476838!
350539	ADAMS	470059
350539	ADAMS	470380!
350539	LETN	470059
350539	LETN	470380!
350539	WABCO	470059
350539	WABCO	470380!
350543	SPG	474272
3505509	GMC	5756
350567C91	IH	473228!
35057	C-R	417198
350570	WHITE	416654
35058	C-R	376590A
35059	C-R	370001A
35059	C-R	380001A
3506	IRON	330385!
3506	UNIVE	455037
35060	C-R	455022
35060+455004	C-R	380001A
350612VD	SPG	224026
35062	C-R	370001A
35062	C-R	6638S
35064	C-R	417198
350645	ADAMS	412119!
350645	LETN	412119!
35065	C-R	417196!
35066	C-R	370001A
35066	C-R	380001A
350679R91	IH	6312
35069	C-R	6638S
3507	UNIVE	416271!
35070	C-R	415027
35070	SPG	416865!
35070S	SPG	416865!
35071	C-R	415027
35071	C-R	415027!
35071	NOK	2146
35072	C-R	370001A
35072	C-R	380001A
350737R91	IH	472636!
35075	C-R	370002A
35075	NATL	416476!
35075+455011	C-R	370013A
35075+455011	C-R	380001A
3507585	CHRYS	6808N
350769R91	IH	6312
35077	C-R	415027
35078	C-R	415027!
35078	C-R	415027
35080	C-R	415027
35080	GARLK	416865!
35082	C-R	415027!
35082	C-R	415027
350822R91	IH	6180=
35083	C-R	415027*
35084	C-R	415027!
35084	C-R	415027
35085	C-R	415027
35085	C-R	415027!
35086	C-R	417495*
35086N	SPG	417487!
35086N	SPG	417487
35087	C-R	415027
35087	C-R	415027!
350878	SPG	473424!
35089	C-R	415027
35089	C-R	415027!
350891R91	IH	472560N!
350892R91	IH	471267!
3509	GEM	471271!
3509	ROSS	471271!
350902	SPG	471765!
350918	NATL	473241
35092	C-R	415027
350936N	WMG	350936
35094	C-R	417495
35095	C-R	417495
35095S	SPG	416271!
35096	C-R	415559*
350974	NATL	350974
35098	C-R	6612S*
350983	NATL	472179
35099	C-R	415559
350A216	C-R	415449!
350AMM216	C-R	415449!
350AMM216-Q6	C-R	415449!
350B212	C-R	416271!*
350B216	C-R	415449!
350B218	C-R	415449!
350BM212	C-R	416271!*
350C28	C-R	411376!
350CHA216	C-R	415449!
350F212	C-R	416271!*
350F216	C-R	415449!
350FM212	C-R	416271!*
350FM216	C-R	415449!
350G130	C-R	45653S
350G224	C-R	45827S
350HD224	C-R	45827S
350MA216-L	C-R	415449!
350N216	C-R	415449!
350T210	C-R	416444
350W210	C-R	416444
350W212	C-R	416271!
350W212-M1	C-R	416271!
350W214	C-R	411245!
350W214-M1	C-R	411245!
350W216	C-R	415449!
350W216-M1	C-R	415449!
350W216-T8	C-R	415449!
350W216-Y26	C-R	415449!
350W218	C-R	415302
350W220	C-R	415483!
350W220-M1	C-R	415483!
350W222	C-R	455434
350W224	C-R	416664!
350W28	C-R	411376!
350W28-M1	C-R	411376!
350W525	CONE	5551
350YM216	C-R	415449!
35100	C-R	415559
35101N	SPG	416282
35102	C-R	370001A
35102	C-R	380001A
35103	C-R	370001A
35106	C-R	415559*
35107	C-R	417496
35109	C-R	417496
3511035	C-W	415449!
3511035	WOOL	415449!
351108R1	IH	413469!
351108R91	IH	413469!
35111	C-R	455396
351113	RELEE	470898
35112	C-R	6245S=
351123	RELEE	473237!
35114	C-R	6245S=
351181	NATL	481181!
351196VD	SPG	351196V
35120	C-R	710188
351206	NATL	473237!
351224	NATL	471224!
351264	NATL	471264!
351264	SPG	471264!
351270	NATL	471270!
351271R91	CASE	470712!
351276R91	IH	471765!
351281	NATL	471281!
35130	C-R	6245S=
35130	GARLK	417278
351315	NATL	472705!
351354	NATL	471354!
35137S	SPG	415137!

! Industrial Size/Type * Minor Width Difference

= The U.S. customer service number is 877-4-TIMKEN. The Canadian customer service numbers are 800-565-4927 (English) and 800-565-0438 (French-Canadian).

Mfr. No.	Name	Zero Duplication or Recommended Industrial
35137S	SPG	418028
351398	SPG	351398
3513S	SPG	3513
3513SGR	SPG	8622
3513SS0	SPG	3517
3513VJ0	SPG	3517V=
351442	NATL	471442!
351466	NATL	471466
35146S	SPG	415146!
35146S	SPG	415991
35149	SPG	417343!
35149DA	IH	470530!
3515137	CHRYS	331227H
3515138	CHRYS	331228H
351526	NATL	471526!
3515383	CHRYS	7300S
3515384	CHRYS	2506
351552	NATL	471558
351554	NATL	471554!
3515569	CHRYS	472164!
35156	SPG	5578
351567	NATL	471567!
351570	NATL	471570!
351571	NATL	471571
35160	SPG	417171!
35162	SPG	417181!
35164	SPG	412473!
351643	NATL	471643!
351649	SPG	471649!
351689	NATL	471689!
3517	NATL	9845
351760	NATL	471760
351763	NATL	471763
351802C92	IH	370023A
3519D5	WHITE	415458!
351M212-L	C-R	416271!
351M218-L	C-R	415302
352009	NATL	472397!
352039	CONTI	416956
352068	CONTI	451583!
352080	NATL	472164!
352080R91	IH	470625!
3520D5	WHITE	5M867
3521	GEM	471267!
352113	RELEE	470605!
352118	CONTI	6324S=
352122	RELEE	471272!
35220	FMC	415035
35220	FMC	415035!
352270A	CHRYS	471766!
352311	SPG	472311!
35234S	SPG	415234
352352	NATL	6703S
35236	HYST	472299
352369	HYST	415725!
35239	SPICE	9912
35239	VIC	9912
352407	WHITE	472636!
352412	WHITE	415449!
352477C91	IH	5778
352488	GMC	5070
352541	MERCM	352541
35256	SPICE	417487
35266	DENCO	415088!
35266	DENCO	415088
35272	SPG	416706
352847	MANT	417487
352847	MANT	417487!
352998	NATL	473231!
3530	UNIVE	370019A
35304	WAYNE	240356
353052	RELEE	415303!
353079X1	MASSE	415449!
353085	RELEE	413248
35310	GARLK	417262!
35311	SPICE	416273
35311-1	SPICE	416273
353128	NATL	470328
353128	NATL	481213!
35313	SPICE	4250
35313-4	SPICE	4250
353136	NATL	471737
353138	NATL	323138!
353183R91	IH	471466!
353188	NATL	470380!
353193	NATL	471765!
353224M1	C-R	457291*
35322S	SPG	417484!
35347	WHITE	417159
35347S	SPG	417159
35348N	SPG	475348N
35350	GARLK	417358
35354	C-R	416125!
35354S	SPG	416404!
3535A	JOHND	472924!
353716RB	SPG	223010
353716RX	SPG	223010
35374D	IH	481443!
35380S	SPG	410825
3539RC	SUL	417171!
3540	C-R	9X22X7
35400	GARLK	415645!
35405	C-R	710189
35407	C-R	229005
35409	C-R	229005*
35409	C-R	229006
35409S	PETTI	415498
3540RC	SUL	416738!
3540RC	SUL	450096
35410	C-R	229006
35411	C-R	90X110X13!*
354115	RELEE	416664!
354116	C-R	455308
35412	C-R	229005
354124	C-R	455536*
354124M1	C-R	455536
35412VB	TRSCM	446927!
35413	C-R	90X110X12V
354130	C-R	417474*
35414	C-R	229005
354176C91	IH	5778
3542	C-R	9X22X7V!
35420	C-R	90X115X12
35421	C-R	90X115X12!*
354210	C-R	455647=
354212	C-R	412861*
354212M1	C-R	412861*
354214	C-R	417073*
354214	SUL	417073
354214M1	C-R	417073
354216	C-R	415001!
354216K	FAIRB	415001!
354218	C-R	455311*
354220M1	C-R	417079
354224	C-R	417484!
354224M1	C-R	417484!
35426M1	C-R	415001!
35429	SPICE	2064
35429	VIC	2064
35430	C-R	90X120X12
354309	WHITE	473367!
354309	WHITE	473367
35431	C-R	90X120X12V
354316	WHITE	471466!
35432	C-R	90X120X12!
35437	SPG	415437
3543A	HERCU	45637S
3543D5	WHITE	410737!
35440	C-R	90X125X12
35440	C-R	90X125X13!*
35440	C-R	90X125X7*
35448	GMC	471570!
3545	C-R	9X22X7V
35450	C-R	90X130X12
35450	GARLK	417359
354514R91	IH	476838!
35451D	IH	471192
35454PTA	TRSCM	415991!
35454PTA	TRSCM	415991
35455	C-R	229520*
35455	C-R	95X130X12!*
354598R91	IH	450269
35460	TROS	471141!
35465	C-R	90X135X12
3546D	GOODM	415196!
3546E	GOODM	415196!
35474TA	TRSCM	455396
3549392	CHRYS	5414
3549393	CHRYS	5576
3549394	CHRYS	5576
3549395	CHRYS	5127
35494SA	TRSCM	415027!
35498S	SPG	415498
354B216	C-R	415001!*
354B224	C-R	417484!
354BM224	C-R	417484!
354N216	C-R	415001!
354TL215	C-R	6575S
354W210	C-R	455647=
354W212	C-R	412861
354W212-M1	C-R	412861
354W214	C-R	417073
354W214-M1	C-R	417073
354W216	C-R	415001!
354W216-M1	C-R	415001!
354W218	C-R	455311
354W224	C-R	417484!
3550	C-R	9X24X7
355067	RELEE	476470
355082	NATL	415082
355095	SPG	416271!
35510	FI-CO	471765
35511	FI-CO	474255
35511	SPICE	5329
35511	VIC	5329
35512	SPICE	472164!
35512	VIC	472164!
355121	VIC	472164!
355131R91	IH	473232
35514TA	TRSCM	417495
3553	GEM	470954
355305	NATL	415991
355305	NATL	455146!
35544	SHOV	455397
355488	GMC	5070
3554B	JN-MN	472397!
355526	NATL	417350!
35555	C-R	415498
35556	C-R	415498*
35562	C-R	415498*
355660HA	SPG	355660H
35568	C-R	415498*
35569	SPG	416394
3556B	JN-MN	471195!
3556LUP	JN-MN	471195!
355810A	HARWA	35X58X10
355821	NATL	327303!
355851	WHITE	471554!
35589	C-R	415711*
35592	C-R	415711
35593	C-R	415711*
355G212	C-R	40101S
355HC26-L	C-R	3103!
3560	C-R	9X26X7
356010A	HARWA	35X60X10!
3560459	HYST	200870
35608	HYST	415984!
35620	GARLK	417254
35622407.5	TROS	417480!
35623207.5	TROS	415082
35624007.5	TROS	415007
35624407.5	TROS	455008
35624807	TROS	415960!
35624807.5	TROS	415960
35624807C	TROS	415960!
35624808	TROS	415960
35624810	TROS	415960
35624812	TROS	415960
35625207.5	TROS	417485
35645	HYST	417601
35647	DENCO	415995!
35648	C-R	417497
35649	C-R	417497*
35649	DENCO	471766!
35650	DENCO	471820
35650	GARLK	417360
356502R91	IH	472287!
356503R91	IH	472287!
35658	DENCO	470625!
3566	GMC	471192
35675	C-R	417498
35676	C-R	417498*
35680	GARLK	416107!
356806A	HARWA	35X68X10!
35688	C-R	55028*
356887R91	IH	471570!
35689	C-R	471567!*
356923	NATL	415379
356923	NATL	415379!
35693	TROS	8996S=
35697	SPICE	417480!
356RC	SUL	473228
356W525	CONE	5532
357	IDECO	455480!
357-501-641-B	VW	1962
357037R91	IH	472636!
35705	C-R	55028
35710	GARLK	417361
35716	C-R	55028*
357203R91	IH	470898
35722	ALLCH	415138!
35723	SPICE	5778
35724	SPICE	6808N
35724	VIC	6808N
35725	SPICE	9316
35725V	SPICE	9316
35731	CATER	473438
35738	HYST	417205!
3574	DICO	205004
357424	SUL	415138!
3575	UNIVE	370005A
35750	C-R	455402=
3575V	SPG	416624=
357672R91	IH	412119!
3577303	CHRYS	5414
3577305	CHRYS	5127
357769R91	IH	473232
357770R91	IH	473238

! Industrial Size/Type * Minor Width Difference

= The U.S. customer service number is 877-4-TIMKEN. The Canadian customer service numbers are 800-565-4927 (English) and 800-565-0438 (French-Canadian).

Mfr. No.	Name	Zero Duplication or Recommended Industrial
357773R91	IH	473232
357774R91	IH	473238!
3577B	JN-MN	455476*
357820	SPG	80X100X10!
357830C91	IH	417485
3578447	CHRYS	471539
357928R91	IH	412119!
357937R91	IH	410059
357937R91	IH	470380!
357966R91	IH	416380!
357967R91	IH	473238
357968R91	IH	471442!
357969R91	IH	417344!
357970R91	IH	471192
357971R91	IH	472016
357972R91	IH	410708
357973R91	IH	410059
357973R91	IH	470380!
357974R91	IH	415196!
357975R91	IH	417344!
357976R91	IH	471192
357977R91	IH	410708
357978R91	IH	410059
357978R91	IH	470380!
35799	CATER	471737
357C47	NATL	357
358019	WHITE	415995!
358020	WHITE	417181!
3580723	CHRYS	5121
3580975	CHRYS	6815
35810	C-R	9584
358228	WHITE	471141!
35828	HYST	416654!
3583	WOODB	471766!
35850	GARLK	417362!
358765R91	IH	473367!
358765R91	IH	473367
358766R91	IH	471750!
358767R91	IH	473467
358768R91	IH	416738!
358768R91	IH	450096
358769R91	IH	200640
358770R91	IH	415001!
358772R91	IH	473214
358774R91	IH	412119!
358775R91	IH	471765!
358777R91	IH	416444
358780R91	IH	417316!
358783R91	IH	472439
358784R91	IH	473367
358785R91	IH	473421
358787R91	IH	472924
358790R91	IH	473010!
358791R91	IH	411394!
358794R91	IH	455005
358795R91	IH	456105
358798R91	IH	6312
358799R91	IH	6180=
358801R91	IH	472560N!
358802R91	IH	471267!
358803R91	IH	413469!
358804R91	IH	471765!
358805R91	IH	471570!
358806R91	IH	450048
358807R91	IH	473213!
358808R91	IH	473367!
358808R91	IH	473367
358809R91	IH	471750!
358810R91	IH	473467
358812R91	IH	473214
358813R91	IH	452222!
358814R91	IH	412119!
358815R91	IH	471765!
358817R91	IH	200600
358818R91	IH	80313
358819R91	IH	417316!
358821R91	IH	471649!
358822R91	IH	472439
358823R91	IH	473367
358824R91	IH	473421
358825R91	IH	472924
358826R91	IH	411394!
358827R91	IH	418029!
358828R91	IH	455500
358829R91	IH	455005
358830R91	IH	456105
358832R91	IH	474279N
358833R91	IH	6312
358834R91	IH	6180=
358836R91	IH	472560N!
358837R91	IH	471267!
358838R91	IH	471765!
358839R91	IH	470625!
35886	HYST	472179
358873R91	IH	452222!
358896R91	IH	472636!
3588R	JN-MN	416888!
35890	GARLK	417363
358922C91	IH	415960
358981	WHITE	416288!
359042R91	IH	471224!
35905	C-R	5279
35905	C-R	710056
359051R91	IH	473215!
359056R91	IH	470380!
35908F	DIA	5408
35909F	DIA	5408
3590R	SPG	3590
35910	C-R	710056
35910	GARLK	416666
359126R91	IH	473459
359126R93	IH	473459
359126R94	IH	473459
359167	GMC	3698
3591B	JN-MN	472157
3591B	JN-MN	472157!
35925	GARLK	417364
359257R91	IH	471224!
359303R91	IH	471567!
359309R91	IH	471567!
35936	SPG	8996S=
35938	SPICE	2146
35938	VIC	2146
35938-1	SPICE	2146
3593B	JN-MN	455576!
359419	WHITE	417159
359448R91	IH	473215!
359449R91	IH	470380!
35947	DENCO	471466!
359496	WHITE	416288
359497	WHITE	416288!
3594S	SPG	3594=
359506R91	IH	470380!
359547	GMC	2440
359559R91	IH	470380!
359588R91	IH	471567!
3596	CHAMP	415991
3597	CHAMP	417366!
359786R91	IH	416738!
359786R91	IH	450096
359787R91	IH	473419
359788R91	IH	200640
359789R91	IH	470059
359789R91	IH	470380!
359790R91	IH	472179
3597B	JN-MN	472492!
359813R91	IH	450869
35986	CONTI	416956
3598F	OSHKO	471766!
359917C91	IH	370001A
359917C91	IH	6638S
359919C1	IH	JX1125
359919C1	ROCKW	JX1125
35992	CONTI	455079!
359922C91	NAVST	370048A
359922C91	NAVST	380048A
359926C92	IH	370023A
359926C92	IH	456873=
359927C1	IH	JX1128
359928C92	IH	415064
359951R92	IH	473517!
359952R91	IH	473517!
359952R92	IH	473517!
359D6	WHITE	5473
359W212	C-R	415857
35A10019	MINNM	472258!
35A12244	WHITE	417254
35A1803	WHITE	6542=
35A2190	MINNM	473441
35A3596	MINNM	471224!
35A4130	MINNM	471224!
35A4130	WHITE	471224!
35A4130EXP	MINNM	471224!
35A4461	MINNM	415458!
35A5174	MINNM	365008
35A5174	WHITE	365008
35A6303	MINNM	6668S
35A6404	MINNM	327303!
35A8008	MINNM	471442!
35A8008	WHITE	471442!
35A8629	WHITE	476470
35H021	SHOV	474276!
35H027	SHOV	474276!
35P129	WHITE	45825S
35P2744	WHITE	472258!
35P613	MINNM	470898=
35P613	WHITE	470898=
35X45X7SC	TRSCM	35X45X7
35X45X7TC	TRSCM	35X45X7
35X47X7SC	TRSCM	35X47X7
35X47X7TC	TRSCM	35X47X7
35X48X8AS	ISP	714436
35X48X8SC	TRSCM	35X48X8!
35X48X8TC	TRSCM	35X48X8!
35X50X7AN	ISP	35X50X7
35X50X8	CEW	35X50X8!
35X50X8SC	TRSCM	35X50X8!
35X50X8TC	TRSCM	35X50X8!
35X52X7AN	ISP	35X52X7
35X52X8SC	TRSCM	35X52X8!
35X52X8TB	TRSCM	35X52X8!
35X52X8TC	TRSCM	35X52X8!
35X54X8SC	TRSCM	35X54X8!
35X54X8TC	TRSCM	35X54X8!
35X55X11SC	TRSCM	35X55X11
35X55X11TC	TRSCM	35X55X11
35X55X8SC	TRSCM	35X55X8!
35X55X8TC	TRSCM	35X55X8!
35X56X10SC	TRSCM	35X56X10!
35X56X10TC	TRSCM	35X56X10!
35X56X8AN(35)	ISP	35X56X8
35X58X10	SIMRT	35X58X10
35X58X10SC	TRSCM	35X58X10
35X58X10TC	TRSCM	35X58X10
35X60X10	FORSH	35X60X10!
35X60X10	SIMRT	35X60X10!
35X60X10SC	TRSCM	35X60X10!
35X60X10TC	TRSCM	35X60X10!
35X62X10SC	TRSCM	35X62X10
35X62X10TC	TRSCM	35X62X10
35X62X7SC	TRSCM	35X62X7!
35X62X7TC	TRSCM	35X62X7!
35X62X8SB	TRSCM	35X62X7!
35X62X9SC	TRSCM	1955
35X64X8SC	TRSCM	35X64X8!
35X64X8TC	TRSCM	35X64X8!
35X65X10SC	TRSCM	35X65X10!
35X65X10TC	TRSCM	35X65X10!
35X65X8ASN(32)	ISP	35X65X8
35X68X10	FORSH	35X68X10!
35X70X8SC	TRSCM	35X70X8
35X70X8TC	TRSCM	35X70X8
35X72X10SC	TRSCM	35X72X10
35X72X10TC	TRSCM	35X72X10
35X72X8AS	ISP	35X72X8
35X80X8SC	TRSCM	35X80X8
35X80X8TC	TRSCM	35X80X8
36	BL-KN	415988
36005	C-R	229210
36006J	DIA	412943
36006M	DIA	411500
360076R92	IH	476838!
36013	C-R	92X120X13!
360135R91	IH	470059
360135R91	IH	470380!
360136R91	IH	415458!
360137R91	IH	471567!
36015	C-R	92X120X13!*
3601B	JN-MN	455117*
360251R91	IH	415001!
360252R91	IH	416444
360253R91	IH	473232
360254R91	IH	471570!
360255R91	IH	470898
36030	GARLK	417365
36030400	WHITE	473237!
360304B	HERCU	473237!
360306B	HERCU	475996H=
360374R91	IH	471466!
360375R91	IH	472924!
360388R91	IH	450869
360436R91	IH	473215!
360438R91	IH	450869
360440R91	IH	416654!
360440R92	IH	416654!
360457R91	IH	417316!
3604B	JN-MN	455462*
36050	GARLK	415072
360507	WHITE	410694!
36060	VICK	6590S
360662R91	IH	417350!
360692R91	IH	472924!
360693R91	IH	410737!
360694R91	IH	473459
360694R92	IH	473459
3607	NATL	3907
3607CA1	SPG	3607
3608RC	SUL	471866!
3609	NATL	1962
360964R92	IH	473459
3609CA1	SPG	3609
360A26010	TROS	416500
360FF130-L	C-R	6074
360HC28-L	C-R	3095
36101	TROS	5756
361017	LILIS	471192
361025R91	IH	417316!
361049R91	IH	410737!

! Industrial Size/Type * Minor Width Difference

= The U.S. customer service number is 877-4-TIMKEN. The Canadian customer service numbers are 800-565-4927 (English) and 800-565-0438 (French-Canadian).

Mfr. No.	Name	Zero Duplication or Recommended Industrial
36106	*WAYNE*	**470596**
3610RC	*SUL*	**417073**
3611035	*WOOL*	**418028**
3611035	*WOOL*	455137!
361165	*GMC*	9613S
361170	*HYST*	**455144**
36120	*C-R*	39882
361248R91	*IH*	**416654**!
361248R92	*IH*	**416654**!
361261	*WHITE*	50631
36128	*C-R*	**415234**!
3612A	*JN-MN*	**472354**!
36140	*TROS*	**473450**!
36145	*C-R*	3909
36145	*C-R*	5277
36146	*C-R*	3909
36147	*C-R*	3909
36155	*C-R*	**417698**
36156	*C-R*	456744N
36157	*C-R*	**417698**
36158	*C-R*	456744N
36161	*C-R*	456744N
361648	*GMC*	483488
36166	*C-R*	**415389***
36174	*C-R*	**416332**!
361746	*GMC*	3357
36175	*C-R*	**416332**!
361750	*GMC*	3348
36177	*C-R*	**416332***
36177	*C-R*	**416332**!
36178	*C-R*	**416332**!
36179	*C-R*	487397V
3618	*C-R*	340827
36180	*C-R*	**416332**!
36181	*C-R*	**416332**!
36183	*C-R*	**416332**!
36184	*C-R*	476332N=
36185	*C-R*	**416332***
36185	*C-R*	**416332**!
36186	*C-R*	**416332**!
36186	*C-R*	**416332***
36194	*C-R*	**416332**!
36195	*C-R*	**416557**
3619687	*CHRYS*	17780
3619687	*CHRYS*	**470354**
361A220	*C-R*	**415458**!
361AM220	*C-R*	**415458**!
361AM224	*C-R*	**415984**!*
361B220	*C-R*	**415458**!
361BM220	*C-R*	**415458**!
361FM220	*C-R*	**415458**!
36202	*C-R*	255833=
36202	*CUSH*	6832S
36202E	*CUSH*	205004
36202F	*CUSH*	205004
36208M	*DIA*	**455151**
3620B	*JN-MN*	**470625**!
3620S	*SPG*	**416476**=
362119R91	*IH*	**470334**!
362119R92	*IH*	**470334**!
362119R93	*IH*	**470334**!
36220	*C-R*	**415937**!*
36221	*C-R*	200603
362212	*C-R*	**410825***
362212M1	*C-R*	**410825**
362216	*C-R*	**416273**!
362216M1	*C-R*	**416273**!
362218	*C-R*	**415988***
362218M1	*C-R*	**415988***
36222	*C-R*	**455260***
362220	*C-R*	**415458**!
362220	*GR-DV*	**415458**!
362220K	*SUL*	**415458**!
362220M1	*C-R*	**415458**!
362224	*C-R*	**415984**!*
362224M1	*C-R*	**415984**!*
362228	*C-R*	**415303**!*
362228M1	*C-R*	**415303**!*
36223	*C-R*	**415937**!
36224	*C-R*	**455080***
36226	*C-R*	**415350***
36227	*C-R*	**415937**!
362272C91	*IH*	**471466**!
36228	*BUC-E*	**415234**!
36228	*C-R*	**415234**!*
36229	*C-R*	**415937**!*
36230	*C-R*	**415937**!
36231	*C-R*	**415937**!
36232	*C-R*	**415937**!
36233	*C-R*	**415937**!
36234	*C-R*	**415937**
362398R91	*IH*	**417247**!
362399R91	*IH*	**470530**!
3623B	*JN-MN*	**416664**!
3623RC	*SUL*	**415066**
3623VG3	*SPG*	**416654**=
362400R91	*IH*	**415066**
362401R91	*IH*	**417316**!
362402	*SPICE*	**415458**!
362402	*VIC*	**415458**!
362402R91	*IH*	**416339**
362402R91	*IH*	455031!
362403R91	*IH*	**410987**!
362404R91	*IH*	50075=
362405R91	*IH*	**410694**!
362406R91	*IH*	**471554**!
362407R91	*IH*	**450084**!
362408R91	*IH*	**471750**!
362409R91	*IH*	**415043**
362410R91	*IH*	**416288**!
362411R91	*IH*	**412119**!
362412R91	*IH*	**474253**
362413R91	*IH*	240009
362414R91	*IH*	**471466**!
362420R91	*IH*	**416288**!
3624S	*SPG*	**417601**=
3625B	*JN-MN*	**473245**!*
362648	*GMC*	483488
36269	*C-R*	**415937**!
362767R91	*IH*	**413246**
36277	*SPICE*	**415085**!
36277	*VIC*	**415085**!
36282	*C-R*	370012A
36285	*C-R*	370012A
36289	*C-R*	55353
3628B	*JN-MN*	**415035**
3628B	*JN-MN*	**415035**!
362A220	*C-R*	**415458**!
362AM220	*C-R*	**415458**!
362B220	*C-R*	**415458**!
362CHA220	*C-R*	**415458**!
362F220	*C-R*	**415458**!
362F220	*TRANG*	**415458**!
362FM220	*C-R*	**415458**!
362N212	*C-R*	**410825***
362RC	*SUL*	**471766**!
362W216	*C-R*	**416273**!
362W216-M1	*C-R*	**416273**!
362W218	*C-R*	**415988***
362W220	*C-R*	**415458**!
362W220-M1	*C-R*	**415458**!
362W224	*C-R*	**415984**!*
362W224-M1	*C-R*	**415984**!*
362W228	*C-R*	**415303**!*
362W26	*C-R*	**415350***
362W28	*C-R*	**415234**!*
362W475	*CONE*	5167
363	*IDECO*	**415035**
363	*IDECO*	**415035**!
3630051	*GMC*	**473179**!
36304	*C-R*	**417355**!
36304	*C-R*	485497
36305	*C-R*	**417355**!
36305	*C-R*	485497
3630681	*CUMMI*	39701
36309	*C-R*	**417355**!
36309F	*DIA*	**472924**!
36310	*C-R*	**417355**!
36314	*C-R*	**417355**!
36314	*C-R*	485497*
36315	*C-R*	**417355**!
363157R91	*IH*	**415027**!
363157R91	*IH*	**415027**
36320	*C-R*	**417355**!
36321	*C-R*	**417158**=
36321	*C-R*	**417158**
36322	*C-R*	**417355**!
36323	*C-R*	**417158**
36323	*C-R*	**417158**=
3633416	*CHRYS*	**323138**!
3633518	*GMC*	2043
363374C91	*IH*	482267
3633CA	*SPG*	3633
3633CA	*SPG*	8871
36340	*C-R*	**417355**!
3634349	*CHRYS*	6808N
36345	*C-R*	**417355**!
36345	*C-R*	485497
363511R91	*IH*	**472924**!
363512R91	*IH*	**476470**
363513R91	*IH*	450313
363514R91	*IH*	**470334**!
363514R92	*IH*	**470334**!
363514R93	*IH*	**470334**!
36352	*ACF*	**415219**
36352	*HYST*	**415219**
36355	*C-R*	**416125**!*
36357	*C-R*	370011A
36358	*C-R*	370011A
36361	*C-R*	**416125**!*
36361	*SPICE*	722108
363615	*WAGMA*	**473010**!
36362	*C-R*	**416125**!*
36362	*SPICE*	710068
36363	*C-R*	**416125**!*
36364	*C-R*	**416125**!*
36365	*C-R*	370011A
36366	*SPICE*	**471271**!
36367	*C-R*	**416125**!
36368	*C-R*	**416125**!
36369	*C-R*	**416125**!
36369	*SPICE*	**416273**
36370	*C-R*	**416125**!
36371	*C-R*	**416125**!
363716	*WHITE*	5751
36372	*C-R*	**416125**!
3637203	*CHRYS*	**410496**!
36374	*C-R*	**416125**!
36376	*C-R*	**416125**!
36377	*C-R*	**416125**!
363771R91	*IH*	**413246**
36378	*C-R*	370002A
36382	*C-R*	**417499***
363821R91	*IH*	**472439**
36383	*C-R*	370012A
36383	*C-R*	380023A
36385	*C-R*	415832
36386	*C-R*	415832
36387	*C-R*	**417499**
36388	*C-R*	**417499**
36389	*C-R*	417500
36390	*C-R*	455436=
36391	*C-R*	415832!*
363G214	*C-R*	3210
363R224-Y12	*C-R*	5951
363SH15	*MACK*	350942
363SH47	*MACK*	**472636**!
36408	*OLIVE*	**415995**!
3643184	*CHRYS*	322353
3643321	*CHRYS*	7188S
36433VTB	*TRSCM*	456744N
364341	*SPICE*	**471141**!
364341	*VIC*	**471141**!
364468R91	*IH*	**471224**!
364469R91	*IH*	**471750**!
364470R91	*IH*	470059
364470R91	*IH*	**470380**!
364471R91	*IH*	**476838**!
364472R91	*IH*	**473215**!
364473R91	*IH*	**476838**!
364474R91	*IH*	470059
364474R91	*IH*	**470380**!
364475R91	*IH*	**471750**!
364476R91	*IH*	**471224**!
364477R91	*IH*	**473215**!
3644D	*GOODM*	**416888**!
3644F	*GOODM*	**416888**!
3645	*C-R*	311189*
36454TA	*TRSCM*	**415389**
364561	*WHITE*	**474278**!
364578	*WHITE*	**474276**!
3645Z137	*MACK*	**417159**=
36464TA	*TRSCM*	**416332**!
364692R91	*IH*	**417350**!
364707B	*HARWA*	36X47X7
364759	*WHITE*	**450593**!
364800	*GMC*	3698
364808	*WHITE*	**472164**!
364861R91	*IH*	**417350**!
36487	*SPICE*	**470682**
36487-1	*SPICE*	**470682**
364874	*WHITE*	**415001**!
3648E	*GOODM*	**416154**!
364SZ101	*MACK*	**410825**
364SZ109	*MACK*	**471820**
364SZ111	*MACK*	**417484**!
364SZ112	*MACK*	**471267**!
364SZ115	*MACK*	5471
364SZ118	*MACK*	240414
364SZ119	*MACK*	**415991**
364SZ122	*MACK*	**471424**!
364SZ129	*MACK*	**412119**
364SZ136	*MACK*	**415960**
364SZ13A	*MACK*	**417181**!
364SZ14	*MACK*	**323138**!
364SZ145	*MACK*	**472560N**!
364SZ148	*MACK*	**416500**
364SZ15	*MACK*	**473473**
364SZ151	*MACK*	**413469**!
364SZ17	*MACK*	**472636**!
364SZ174	*MACK*	**472475**
364SZ18	*MACK*	**472636**!
364SZ181	*MACK*	5405
364SZ188	*MACK*	**416364**!
364SZ189	*MACK*	7866S
364SZ24	*MACK*	5957S
364SZ25	*MACK*	5951
364SZ34	*MACK*	**472164**!

! Industrial Size/Type * Minor Width Difference

= The U.S. customer service number is 877-4-TIMKEN. The Canadian customer service numbers are 800-565-4927 (English) and 800-565-0438 (French-Canadian).

Mfr. No.	Name	Zero Duplication or Recommended Industrial
364SZ35	*MACK*	**416654**!
364SZ35A	*MACK*	**416654**
364SZ36	*MACK*	**416654**
364SZ38	*MACK*	**472636**!
364SZ40	*MACK*	**473228**!
364SZ43	*MACK*	**472394**
364SZ44	*MACK*	**472016**
364SZ45	*MACK*	**472394**
364SZ47	*MACK*	**450400**
364SZ52	*MACK*	**415458**!
364SZ53	*MACK*	**417316**!
364SZ54	*MACK*	**473464**!
364SZ54	*MACK*	**473464**
364SZ56	*MACK*	**410308**!
364SZ59	*MACK*	**471787**!
364SZ61	*MACK*	**415041**
364SZ62	*MACK*	**416282**
364SZ66	*MACK*	**472164**!
364SZ66A	*MACK*	**472164**!
364SZ70	*MACK*	**480630**!
364SZ81	*MACK*	**417344**!
364SZ83	*MACK*	**417171**!
364SZ84	*MACK*	**471231**!
364SZ86	*MACK*	**471570**!
364SZ88	*MACK*	**471442**!
364SZ88A	*MACK*	**471442**!
364SZ90	*MACK*	**472015**!
364SZ91	*MACK*	**413246**
364SZ95	*MACK*	**472015**!
36500	*HYST*	**473245**!
365046	*WHITE*	**415960**
36506	*EATON*	370023A
3650633	*GMC*	**410987**!
3651493	*GMC*	**415234**!
365207A	*HARWA*	36X52X7
3652523	*GMC*	**470606**!
365277	*GMC*	5246
3653	*C-R*	**330385**!
36531	*CHRYS*	**471231**!
36536	*MALL*	**350974**!
3653617	*GMC*	5M89
3653618	*GMC*	**411330**!
3654	*C-R*	**330385**!
365416R91	*IH*	**470530**!
365434R91	*IH*	**415449**!
36544C	*DIA*	**473010**
365458	*WHITE*	**416282**
36549F	*DIA*	**470334**!
365525R91	*IH*	**450040**
365526R91	*IH*	**473238**
365528R91	*IH*	**473010**!
365576R91	*IH*	**471224**!
365610A	*HARWA*	36X56X10
365618	*GMC*	**411330**!
3656536	*GMC*	6064
3656537	*GMC*	6064
3656538	*GMC*	6064
3656817	*GMC*	**450666**
3657	*C-R*	**330385**!
3657616	*GMC*	**471192**
365766R91	*IH*	**470530**!
365767R91	*IH*	**415449**!
365810A	*HARWA*	36X58X12
365874	*WHITE*	**415001**!
3659486	*CLARK*	353141!
3659486	*GMC*	353141!
3659542	*GMC*	**470530**!
3660	*C-R*	**330385**
3660089	*GMC*	6090S
3660091	*GMC*	6090S
366207A	*HARWA*	36X62X7!
3663166	*GMC*	**450666**
36634M	*DIA*	**415001**!
3664	*US-EL*	**481443**!
36644M	*DIA*	**417484**!
3664520	*GMC*	**473313**
36649	*CHRYS*	**410308**!
36650	*C-R*	710266
36655	*C-R*	710145
36660	*C-R*	710219
3668	*C-R*	**330385**!*
3668B	*JN-MN*	**413469**!*
3669	*C-R*	**330385**!*
3669156	*GMC*	**412119**!
3669157	*GMC*	**417316**!
36691A	*C-R*	**473460**
366937C91	*IH*	**416654**
366982C91	*IH*	712937
367	*CHEL*	**471766**!
36701A	*C-R*	9613S
3670B	*JN-MN*	**417316**!
367162R91	*IH*	**470380**!
367163R91	*IH*	**473215**!
3671B	*JN-MN*	**472185**!
36727	*SPERY*	204013
36727	*VICK*	204013
3672B	*JN-MN*	**415449**!
3673B	*JN-MN*	**416706**!
36740	*C-R*	**416919**!
36740	*C-R*	**416919***
3674B	*JN-MN*	**416654**!
36750	*C-R*	**416919**
3675072	*GMC*	**411330**!
3675098	*GMC*	**472439**
36769J	*DIA*	**473215**!
3677	*C-R*	**330385**
36770	*C-R*	**417501***
36771	*C-R*	**417501**
3677B	*JN-MN*	**416332**!
3677CA	*SPG*	3677
3678151	*GMC*	**411330**!
367956R91	*IH*	340771
367957R91	*IH*	340771
3680	*C-R*	**330385**!
3680095	*CUMMI*	977105
3680706	*CUMMI*	977122
3680994	*GMC*	2081
3680S	*SPG*	3680
3681302	*CHRYS*	**415349**
3681B	*JN-MN*	**415458**!
3682	*C-R*	**330385**!
368240	*WAGMA*	**417562**
368252C91	*IH*	7600S
3683	*C-R*	240385
3683	*C-R*	**330385**
3684530	*GMC*	6358
36850	*C-R*	55030*
36850F	*DIA*	**415458**!
36851	*C-R*	55030*
368621C91	*IH*	**471138**!
368629R91	*IH*	200895=
3686530	*GMC*	6358
3686537	*GMC*	6358
3686551	*GMC*	6358
3686563	*GMC*	2081
3686571	*GMC*	**450666**
3686593	*GMC*	**414045**!
36868	*GMC*	**471705**!
3687	*C-R*	**330385**!
368723R91	*IH*	**470334**!
368724R91	*IH*	**473459**
368725R91	*IH*	**416654**!
36880	*C-R*	55030
368829R91	*IH*	**455500**
3688B	*JN-MN*	**470774**!
3689176	*GMC*	**473227**
36895	*C-R*	55646=
36897	*GMC*	**471554**!
3689758	*GMC*	**472015**!
36897C	*DIA*	6532S=
36898J	*DIA*	**415371**
36899R	*DIA*	**415697**!
36899R	*DIA*	455547
368D6	*WHITE*	**415960**!
368RC	*SUL*	470059
368RC	*SUL*	**470380**!
36904W	*DIA*	5957S
369072	*DIA*	**415991**
3690A	*HERCU*	**470712**
3690B	*JN-MN*	455402=
3691B	*JN-MN*	**471821**!
3692B	*JN-MN*	**416271**!
369316R91	*IH*	**415001**!
369317R91	*IH*	**418029**!
369318R91	*IH*	**455500**
369319R91	*IH*	**417316**!
369380R91	*IH*	7208S
3693B	*JN-MN*	**416339**
3693B	*JN-MN*	455031!
36940	*C-R*	55646*=
36944	*C-R*	5532
36945	*C-R*	416670
36946	*C-R*	416670
36949	*C-R*	417502
3694B	*JN-MN*	**472636**!
3694T2	*DIA*	240731
36950	*C-R*	417502
3695B	*JN-MN*	**473213**!
3697029	*GMC*	6985
3697114	*GMC*	**473227**
3697B	*JN-MN*	**472394***
3698B	*JN-MN*	**416229***
3699678	*CHRYS*	3087
369978	*GMC*	**414045**!
3699B	*JN-MN*	**417247**!
36A2883661	*GE*	**417349**
36A290628AB001	*GE*	**472018**=
36SR-13	*MACK*	370007A
36X47X7	*SIMRT*	36X47X7
36X47X7SC	*TRSCM*	36X47X7
36X47X7TC	*TRSCM*	36X47X7
36X50X7SC	*TRSCM*	36X50X7!
36X50X7TC	*TRSCM*	36X50X7!
36X52X7	*SIMRT*	36X52X7
36X52X7SC	*TRSCM*	36X52X7
36X52X7TC	*TRSCM*	36X52X7
36X54X7.5-35	*ISP*	36X54X7.5
36X54X8SC	*TRSCM*	36X54X8
36X54X8TC	*TRSCM*	36X54X8
36X56X10	*SIMRT*	36X56X10
36X56X10SC	*TRSCM*	36X56X10
36X56X10TC	*TRSCM*	36X56X10
36X58X10	*NATL*	36X58X8!
36X58X12	*SIMRT*	36X58X12
36X58X12SC	*TRSCM*	36X58X12
36X58X12TC	*TRSCM*	36X58X12
36X58X8SC	*TRSCM*	36X58X8!
36X58X8TC	*TRSCM*	36X58X8!
36X60X7SC	*TRSCM*	36X60X7!
36X60X7TC	*TRSCM*	36X60X7!
36X62X7	*SIMRT*	36X62X7!
36X62X7SC	*TRSCM*	36X62X7!
36X62X7TC	*TRSCM*	36X62X7!
36X68X10SC	*TRSCM*	36X68X10
36X68X10TC	*TRSCM*	36X68X10
37-463-3	*SPICE*	**474276**
370-7005	*STEM*	370013A
370-7006	*STEM*	370002A
370-7007	*STEM*	386025A
370-7007	*STEM*	**416158**
370-7008	*STEM*	370029A
370-7009	*STEM*	370002A
370-7011	*STEM*	370002A
370-7013	*STEM*	370036A
370-7013	*STEM*	370037A
370-7013	*STEM*	370338A
370-7013	*STEM*	370349A
370-7015	*STEM*	370192A
370-7016	*STEM*	AR20+370004A
370-7018	*STEM*	370008A
370-7022	*STEM*	AR2+370026A
370-7023	*STEM*	370065A
370-7023	*STEM*	376590A
370-7024	*STEM*	370107A
370-7025	*STEM*	370027A
370-7031	*STEM*	370036A
370-7031	*STEM*	370349A
370-7031	*STEM*	380036A
370-7043	*STEM*	386025A
370-7043	*STEM*	**416158**
370-7044	*STEM*	370037A
370-7044	*STEM*	370338A
370-7046	*STEM*	**417134**
370-7048	*STEM*	370046A
370-7049	*STEM*	**417172**
370-7055	*STEM*	370013A
370-7091	*STEM*	370107A
370-7095	*STEM*	370037A
370-7095	*STEM*	370338A
370-7097	*STEM*	386025A
370-7097	*STEM*	**416158**
370-7098	*STEM*	370036A
370-7098	*STEM*	370349A
370-7099	*STEM*	370065A
370-7099	*STEM*	376590A
3700	*NATL*	7044NA
370000	*NATL*	370000N
370001A	*NATL*	6638S
370001T	*NATL*	380001A
370003T	*NATL*	380003A
37002	*HYST*	**417562**
370020A	*NATL*	370021A
370023A	*NATL*	456618
370025T	*NATL*	**416158**
370025X	*FRUEH*	386025A
370025X	*FRUEH*	**416158**
37003	*SPICE*	**413248**
370032	*WHITE*	**410496**!
370036A	*NATL*	370349A
370065A	*NATL*	376590A
370086	*WHITE*	**472636**!
3700BX0	*SPG*	3700
3700OS	*JN-MN*	**417549**!*
3700RC	*SUL*	**411376**!
37012	*HYST*	**415072**
37013	*DET*	55350
37015	*C-R*	717005
37015	*C-R*	95X110X10!
370173A	*NATL*	370005A
370178A	*NATL*	**416888**
370179A	*NATL*	9339S
370179BG0	*SPG*	370179A!
370199V	*SPG*	370199A
37020	*C-R*	95X115X13*
370201A	*NATL*	**416158**
3702068	*GMC*	**473179**
370216A	*NATL*	**416158**
370219BG	*NATL*	370219A

! Industrial Size/Type * Minor Width Difference

= The U.S. customer service number is 877-4-TIMKEN. The Canadian customer service numbers are 800-565-4927 (English) and 800-565-0438 (French-Canadian).

Mfr. No.	Name	Zero Duplication or Recommended Industrial
3702255	GMC	**417355**!
3702255	GMC	485497
37025	C-R	95X115X12
370254R91	IH	200763
37026	C-R	4359V
37026	C-R	5274
37026	C-R	95X115X13V!
37027	C-R	717006
37029	VICK	204007=
3702R	SPG	710159
3702RA	SPG	710159
37030	C-R	710060
370338A	NATL	370037A
370349A	NATL	370036A
37039	C-R	95X120X12!
37040	C-R	229510
37040	C-R	95X120X12!
37041	C-R	229510
37041	C-R	95X120X12V!
37042	C-R	229510
37042	C-R	95X120X12V!
3704463	GMC	**450666**
3704483	GMC	6785
370463	BENDI	**471442**!
37047	C-R	95X125X12!
370492	GMC	**471466**!
3704B	JN-MN	**417605***
37050	C-R	95X125X12
370509	WHITE	**472015**!
370510R91	IH	**472560N**!
370513R91	IH	**470625**!
370517R91	IH	**472164**!
370570	WHITE	**416654**
3705725	GMC	6818
3705796	GMC	**450666**
3705B	JN-MN	**415379**
3705B	JN-MN	**415379**!
3706126	GMC	**472164**!
370651C91	IH	**412119**
3706B	JN-MN	**416288**!*
370714	WHITE	5M867
3707356	GMC	**417355**!
3707356	GMC	485497
3707389	GMC	5458
37075	C-R	229520
37075	C-R	95X130X12!
3707CA	SPG	**415449**
37081	C-R	95X130X12!
37087	GEM	**471224**!
3708819	GMC	5453$
37089	C-R	**415027**
37089	C-R	**415027**!
3708B	JN-MN	**415645**!
3708B	JN-MN	455104
37096A	C-R	45013S
37097D	IH	**473229**
3709B	JN-MN	**471424**!*
371-0013	STEM	370036A
371-0013	STEM	370349A
371-0023	STEM	370065A
371-0023	STEM	376590A
371-0043	STEM	386025A
371-0043	STEM	**416158**
3710	C-R	**474279N**
37101	TROS	5070
37103	HYST	**416476**!
37103	TROS	6064
37104	TROS	6064
3711	C-R	**474279N**
3711412	GMC	**417355**!
3711412	GMC	485497
3711B	JN-MN	**415072***
3711LUP	JN-MN	**415072**
3711RC	SUL	**473450**
37120	AMC	**474281**!
3712726	GMC	240698
3712738	GMC	340797
37129	AMC	**473448**
3712B	JN-MN	**416107**!
3712B	JN-MN	455073
3712RC	SUL	**474265**
37132	DENCO	450165
37132	DENCO	**471801**!
3713B	JN-MN	**417555**!*
371409R91	IH	**470625**!
37141	GEM	**323138**!
37141	TROS	5836
371410R91	IH	**472560N**!
371411R91	IH	**472164**!
3714713	GMC	5458
3714771	GMC	**411330**!
3714786	GMC	6818
371498C91	IH	100495
371498C91	IH	**417349**
371498C91	IH	476023N
3714RC	SUL	451469
3715RC	SUL	**417485**
371671	GMC	5458$
3716B	JN-MN	**473459**
3716RC	SUL	**416738**!
3716RC	SUL	450096
3717671	GMC	5458
3717672	GMC	**417355**!
3717672	GMC	485497
371797C91	IH	**473459**
3718	C-R	**474279N***
371876	SPICE	**473235**!
3718RC	SUL	**473446**
3719	C-R	**474279N***
3719	C-R	**474279N**
37194	SPICE	**411348**!
37194	VIC	**411348**!
371D6	WHITE	6270
371SL16	MACK	240356
372-7005	STEM	370013A
372-7006	STEM	370002A
372-7008	STEM	370029A
372-7009	STEM	370002A
372-7015	STEM	370192A
372-7018	STEM	370008A
372-7022	STEM	AR2+370026A
372-7024	STEM	370107A
372-7025	STEM	370027A
372-7046	STEM	**417134**
372-7048	STEM	370046A
372-7049	STEM	**417172**
372-7055	STEM	370013A
372-7091	STEM	370107A
372-7095	STEM	370037A
372-7097	STEM	386025A
372-7097	STEM	**416158**
372-7098	STEM	370036A>
372-7098	STEM	370349A%
372-7098	STEM	380036A>
372-7099	STEM	380065A
3720002	GMC	6818
37201	TROS	**450666**
37202	TROS	**450666**
372068	GMC	**473179**
3721328	GMC	50419
372187R91	IH	**416239**!
3721RC	SUL	**476838**!
3722	C-R	350156
3722	C-R	**473096**
37222	SPICE	2081
37224	CHRYS	**473367**!
37229	SPICE	**415960**
3722RC	SUL	**473446**
372301	BENDI	50883=
372394R91	IH	**473214**
3723B	JN-MN	**415076***
3723RC	SUL	**415196**!
37240	TROS	5797
372438R91	IH	200763
372439R91	IH	80313
372440R91	IH	200895=
372442R91	IH	7208S
372474R91	IH	200763
372475R91	IH	200897=
372476R91	IH	200895=
3725	C-R	350156
3725	C-R	**473096**!
37257	AMC	**472016**
3725850	GMC	6985
3725883	GMC	5458
3725884	GMC	5458
3725885	GMC	5458
37260	TROS	5871
3726RC	SUL	**416229**
3727	C-R	350156
3727	C-R	**473096**!
37275	AMC	**470334**!
372759	VICK	**471649**=
372762R91	IH	**471267**!
372763R91	IH	**471267**!
3727B	JN-MN	**417262**!
372823	WHITE	**473179**
3728543	GMC	**470898**
373	IDECO	**415128**
373-0113	STEM	370036A
373-0113	STEM	380036A
373-0123	STEM	370065A
373-0123	STEM	380065A
373-0143	STEM	386025A
373-0143	STEM	**416158**
373-0213	STEM	370349A
373-0213	STEM	380036A
373-0223	STEM	380065A
373-0243	STEM	386025A
373-0243	STEM	**416158**
373002	BENDI	**471103**!
3730317	GMC	5458
37305	WITTE	**472179**
37306	SPICE	710304
373105	HYST	**415035**=
37311	SPICE	710045
373156R91	IH	**413469**!
373157R91	IH	**416921**!
373159R91	IH	**416921**!
3732	NATL	3732S
37328	C-R	415983V*
37330	C-R	415983N!
37332	C-R	415983V
37334	C-R	415983N!
37335	C-R	415983N!
37336	C-R	713750
3733703	CHRYS	HU024A
3733704	CHRYS	HU028A
3733705	CHRYS	HU042A
3733708	CHRYS	730004
3733709	CHRYS	730001
3733710	CHRYS	730016
37338	C-R	2377
37340	C-R	2377
37340	C-R	5278
37341	C-R	2377
37342	C-R	2377
373468	CHRYS	HU149A
3735006	CHRYS	**412119**!
37351	C-R	416041
37352	C-R	416041
3735211	CHRYS	**417316**!
37354	C-R	416041
37357	C-R	**415379**!
37358	C-R	**415379**!
37358	C-R	**415379**
37360	C-R	**415379**
37360	C-R	**415379**!
37361	C-R	**415379**!
37361	C-R	**415379**
373768	BENDI	**471192**
37376A	C-R	**415449**!
3737779	GMC	451117N=
3737894	GMC	**473179**
3737LPD	JN-MN	**417608**
3737RC	SUL	**417606**
37381	C-R	**415379**
373822	WHITE	**473179**
373823	WHITE	**473179**
37386	C-R	**415379***
37387	C-R	486544N=
37388	C-R	**415379***
37389	C-R	**415379***
3738B	JN-MN	**415938***
3738RC	SUL	**472636**!
37390	C-R	415963N=
37391	C-R	**415379**
37391	C-R	**415379**!
3739112	GMC	5499=
37392	C-R	**415379**!
37392	C-R	**415379**
37393	C-R	**415379**
37394	C-R	**415379**!
37395	C-R	**415379**!
37396	C-R	**415379**
37396	C-R	**415379**!
37397	C-R	**415379***
37398	C-R	**415379**
37399	C-R	**415379**
37400	C-R	**415379**
37400	C-R	**415379**!
374006R91	IH	335924N
37401	C-R	**415379**
37402	C-R	**415379**
37403	C-R	415963N!=
37405	C-R	3893V
37405	C-R	**415379**!
37407	C-R	**415379***
37408	C-R	710085
3740B	JN-MN	**473214**
3740LPD	JN-MN	**473214**!
3740LUP	JN-MN	**473214**
3740RC	SUL	**473239**
37410	C-R	**415379**
37412	C-R	**415379**
37412	C-R	**415379**!
37413	C-R	**415379**!
37413	C-R	**415379**
3741786	GMC	6818
3742042	GMC	6936S
374216	BENDI	**474278**!
37421A	C-R	**472924**!*
3742392	GMC	7107A=
3742402	GMC	6936S
3742583	GMC	2081
374286	WHITE	**410987**!
374287	WHITE	**415458**!
374293	WHITE	**416332**!

! Industrial Size/Type * Minor Width Difference > Hub Mount % Spindle Mount $ F-M Number Is Part Of A Kit
= The U.S. customer service number is 877-4-TIMKEN. The Canadian customer service numbers are 800-565-4927 (English) and 800-565-0438 (French-Canadian).

Mfr. No.	Name	Zero Duplication or Recommended Industrial
3742B	*JN-MN*	**472397**!
3742RC	*SUL*	**471868**
3743200	*GMC*	**417355**!
3743200	*GMC*	485497
3743201	*GMC*	6358
3743202	*GMC*	2081
37433	*C-R*	**417205**!*
37435	*C-R*	**417205**!
37436	*C-R*	**417205**!
3743698	*GMC*	**417355**!
3743698	*GMC*	485497
3743719	*CHRYS*	**471652**
3743719	*CHRYS*	482208!
3743915	*GMC*	**415991**
3743B	*JN-MN*	**411245**!
37446	*C-R*	**417205**!
3744991	*GMC*	**415991**
3744991	*GMC*	455146!
3744RC	*SUL*	**473232**
374527R91	*IH*	**471267**!
3745384	*GMC*	5072$
37454PTA	*TRSCM*	415983N!
37457	*C-R*	**417205**!
37458	*C-R*	**417205**!
37459	*C-R*	**417205**!
3745RC	*SUL*	**473426**
37460	*C-R*	**417205**!
3746212	*GMC*	9613S
3746213	*GMC*	9613S
3746465	*GMC*	5092
37466	*C-R*	**417205**!
3746601	*GMC*	**473179**
3746788	*GMC*	5499=
3746B	*JN-MN*	**472572**!
3746RC	*SUL*	**415027**
3746RC	*SUL*	**415027**!
37473	*C-R*	55329=
37474STA	*TRSCM*	**415379**!
37480	*C-R*	**416339**
37480	*C-R*	455031!
3748347	*GMC*	5072
374841R1	*IH*	JX1136
3748568	*GMC*	**473473**
37490	*C-R*	**416339**
37490	*C-R*	455031!
37491	*C-R*	**416339**
37491	*C-R*	455031!
374947	*WHITE*	50327
37494TA	*TRSCM*	**416339**
37494TA	*TRSCM*	455031!
3749981	*GMC*	5499=
374A224	*C-R*	**417316**!
374AMM224	*C-R*	**417316**!
374B224	*C-R*	**417316**!
374B228	*C-R*	**417344**!*
374BN224	*C-R*	**417316**!
374H224-T8	*C-R*	**417316**!
374SK43	*MACK*	240733
3750	*C-R*	**471103**!
3750	*UNIVE*	**470530**!
375000R91	*IH*	**416239**!
375001R91	*IH*	**416239**!
37500A	*IH*	**473446**
3750231	*GMC*	**415437**
375035X1	*MASSE*	**415458**!
37504	*C-R*	5512
3750867	*GMC*	6358
375094	*HERCU*	**417350**=
3750E	*GOODM*	415064
3751	*C-R*	**471103**!
37511	*C-R*	**416339**
37511	*C-R*	455031!
3751233	*CHRYS*	3095
3751235	*CHRYS*	3103!
37518A	*C-R*	**471787**
375208A	*HARWA*	37X52X8
37521	*C-R*	**416339**
37521	*C-R*	455031!
375210	*C-R*	455321
375212	*C-R*	**416071**
375216	*C-R*	**455079**!
375216M1	*C-R*	**455079**!
375218	*C-R*	**417481**
37522	*C-R*	**416339**
37522	*C-R*	455031!
375220	*C-R*	**417343**!
375220M1	*C-R*	**417343**!
375222	*C-R*	**455151**
375224	*C-R*	**417316**!
375224	*CABOT*	**417316**!
375224	*GR-DV*	**417316**!
375224	*JA-MI*	**417316**!
375224	*JAE*	**417316**!
375224K	*FAIRB*	**417316**!
375224K	*SUL*	**417316**!
375224M1	*C-R*	**417316**!
375224M1	*GOODM*	**417316**!
375226	*C-R*	**455005**
375226M1	*C-R*	**455005**
375228	*C-R*	**417344**!
375228M1	*C-R*	**417344**!
375230	*C-R*	**416956**
375230M1	*C-R*	**416956**
37524	*C-R*	455031
37525	*C-R*	**416339***
37526	*C-R*	**416339**
37528	*C-R*	**415259**!
3753	*C-R*	100495
3753	*C-R*	**417349**
37530	*CHRYS*	**473457**!
37532	*C-R*	**416339**
37532	*C-R*	455031!
37533	*C-R*	**416339***
37538	*C-R*	**416339**
37539	*C-R*	**416339**
3753B	*JN-MN*	**415066***
3753M1	*C-R*	100495
3753M1	*C-R*	**417349**
3753T8	*C-R*	100495
3753T8	*C-R*	**417349**
375416	*CABOT*	**416892**!
375424	*SUL*	**415138**!
3754B	*JN-MN*	**416229**
375501	*WHITE*	**471255**!
3755974	*GMC*	**473179**
3755B	*JN-MN*	**471504**!
37560	*C-R*	**416339**
37560	*C-R*	455031!
37560	*HYST*	455251H
37560	*TROS*	**412871**!
37561	*C-R*	**416339**
37561	*C-R*	455031!
37561	*HYST*	**470898**
37561	*TROS*	**473473**
37561A	*C-R*	**473232**
37565	*C-R*	45031S
37565	*VIC*	BS16192
3756B	*JN-MN*	455290
37570	*C-R*	710262
37574	*BR-ST*	**481644**
37574	*C-R*	**415150**!*
37575	*C-R*	**415150**!
37577	*C-R*	**415150***=
3757B	*JN-MN*	**416865**!
3757V	*SPG*	**471466**
37580	*C-R*	**415150**!*
375831	*WHITE*	5405
37584	*HYST*	**415991**
37584	*HYST*	455146!
37586A	*C-R*	**472179**
37590	*C-R*	**415150**!*
37591	*C-R*	**415150**!*
37592	*HYST*	**472234**
3759306	*GMC*	7107A=
37597	*HYST*	**473473**
375981	*BENDI*	**481073**
375A224	*C-R*	**417316**!
375A228	*C-R*	**417344**!*
375AMM28	*C-R*	**417344**!*
375B220	*C-R*	**417343**!
375B224	*C-R*	**417316**!
375B228	*C-R*	**417344**!*
375BM224	*C-R*	**417316**!
375BMM224	*C-R*	**417316**!
375C220	*C-R*	**417343**!
375CHA224	*C-R*	**417316**!
375F224	*C-R*	**417316**!
375F225	*C-R*	**417316**!
375F228	*C-R*	**417344**!*
375FF224	*C-R*	46997S*
375FM224	*C-R*	**417316**!
375FM224-T8	*C-R*	**417316**!
375FM228	*C-R*	**417344**!*
375FR224	*C-R*	**417316**!
375G224	*C-R*	46997S
375G34	*C-R*	45825S
375HD224	*C-R*	46997S
375HD34	*C-R*	45825S
375N224	*C-R*	**417316**!
375N224-T8	*C-R*	**417316**!
375T228	*C-R*	**417344**!
375W212	*C-R*	**416071**
375W216	*C-R*	**455079**!
375W216-M1	*C-R*	**455079**!
375W218	*C-R*	**417481**
375W220	*C-R*	**417343**!
375W220-M1	*C-R*	**417343**!
375W222	*C-R*	**455151**
375W224	*C-R*	**417316**!
375W224-M1	*C-R*	**417316**!
375W226	*C-R*	**455005**
375W228	*C-R*	**417344**!
375W228-M1	*C-R*	**417344**!
375W230	*C-R*	**416956**
375W230-M1	*C-R*	**416956**
375W3	*C-R*	100495
375W3	*C-R*	**417349**
376	*CHEL*	**471763**
37601	*TROS*	6936S
376016	*GMC*	**473459**
37605	*C-R*	**416282**
376077	*WITTE*	**471442**!
37609H	*IH*	**417344**!
3760B	*JN-MN*	**472213**
3761234	*GMC*	2055
3761361	*GMC*	**481181**!
37619	*HYST*	**415995**!
3761933	*GMC*	7412S
376215R91	*IH*	**471684**!
37626	*HYST*	**472394**
3762B	*JN-MN*	**473214**
37631	*C-R*	**416127**
3763B	*JN-MN*	**472394**
3764554	*GM*	72665
37649	*C-R*	417503
3765	*NATL*	4539H
376590	*SPG*	376590A%
376590A	*NATL*	370065A
3765HX1	*SPG*	3765
3766493	*GMC*	205044
3766706	*GMC*	8976S
3766B	*JN-MN*	**472439***
37670	*C-R*	370023A
37670	*C-R*	5667
37675	*JAC*	**471649**!
376755C91	*IH*	40316S
376761	*GMC*	3638
376764	*ALLCH*	**472924**!
3767702	*GMC*	5092
3767OS	*JN-MN*	**481073***
376851	*GMC*	722109
376855	*GMC*	722108
3768598	*GMC*	8243
376930R91	*IH*	**473230**!
3769588	*GMC*	**471341**!
3769B	*JN-MN*	**473228**
376G222	*C-R*	**455151**
377-7713	*STEM*	370036A
377-7713	*STEM*	370349A
377-7713	*STEM*	380036A
377-7723	*STEM*	370065A
377-7723	*STEM*	376590A
377-7743	*STEM*	386025A
377-7743	*STEM*	**416158**
377-7744	*STEM*	370037A
377-7744	*STEM*	370338A
3770169	*GMC*	7107A=
3770297	*GMC*	**471267**!
37707	*NEHO*	**481181**!
3771094	*GMC*	**418028**
377167A	*HERCU*	240698
3772034	*GMC*	5573$
377239R91	*IH*	**473419**
377240R91	*IH*	**473419**
3772445	*GMC*	8976S
3772748	*GMC*	**473179**
37728	*GMC*	**473235**!
37729	*SPICE*	**415960**
37729	*VIC*	**415960**
3772999	*GMC*	5573$
3773	*C-R*	**471103**!
3773B	*JN-MN*	**473423***
3774	*C-R*	**471103**!
3775184	*GMC*	7934S
37753	*HYST*	**472572**!
37754	*HYST*	450111
3776800	*GMC*	6818
3776S	*SPG*	3776S
377786R91	*IH*	**415001**!
377787R91	*IH*	**415001**!
377788R91	*IH*	**417316**!
377789R91	*IH*	**417316**!
3777B	*JN-MN*	450463
377826	*HYST*	6872S
3779385	*GMC*	**470954**
377959R91	*IH*	**471684**!
37802	*VIC*	370048A
37802	*VIC*	380048A
37802	*WHITE*	370048A
37802	*WHITE*	380048A
37802D	*IH*	**417356**!
37802D	*IH*	455188
3780374	*GMC*	**416273**!
378040R91	*IH*	**415389**
378077R91	*IH*	**455500**!
378077R91	*IH*	**455500**
378078R91	*IH*	**455500**
378078R91	*IH*	**455500**!

! Industrial Size/Type * Minor Width Difference % Spindle Mount $ F-M Number Is Part Of A Kit
= The U.S. customer service number is 877-4-TIMKEN. The Canadian customer service numbers are 800-565-4927 (English) and 800-565-0438 (French-Canadian).

Mfr. No.	Name	Zero Duplication or Recommended Industrial
378157R91	*IH*	**472179**
378158R91	*IH*	**472179**
3781810	*GMC*	9613S
378191R91	*IH*	**472319**
378192R91	*IH*	J990=
378193R91	*IH*	5599$=
3782343	*GMC*	8421S
37825	*C-R*	710205
3783B	*JN-MN*	**470334**!
3785	*SPG*	1953
3785	*SPG*	42X60X7!
37850	*C-R*	**455032**!
37857	*SPERY*	340356
37857	*VICK*	340356
378673C91	*IH*	**470898**
378674C91	*IH*	**471272**!
378717	*SPICE*	6808N
37872	*CHAMP*	**415683**
3787296	*GMC*	9613S
378796R91	*IH*	**417492**
3788429	*GMC*	5337$
3788430	*GMC*	5337$
37901350	*JAE*	6283S
37902	*TROS*	**450173**
37903	*TROS*	**470606**!
37904325	*JAE*	**417205**!
37904375	*JAE*	**417247**!
3790606	*GMC*	8293S
3790622	*GMC*	8610
37908	*GEM*	**471270**!
37908	*ROSS*	**471270**!
37908286	*JAE*	**410102**
37909550	*JAE*	**450472**!
37909730	*JAE*	**415303**!
37909757	*JAE*	**473454**
37909762	*JAE*	**417254**
379144	*WHITE*	**473010**
37919	*GEM*	6597S
37921A	*C-R*	470059
37921A	*C-R*	**470380**
3792463	*GMC*	5337
379247R91	*IH*	**416294**!
379248R91	*IH*	**416294**!
379249R91	*IH*	**416294**!
3792564	*GMC*	8293S
3792806	*GMC*	8293S
3793	*C-R*	**471103**!
37932A	*C-R*	**471535**!
3794002	*GMC*	9178S
3794006	*GMC*	5113
3794B	*JN-MN*	**417020**
3795B	*JN-MN*	**412119**!
379643	*WHITE*	**472636**!
379654	*GMC*	5756
3796564	*GMC*	**417506**
3796575	*GMC*	**417506**
3796903	*GMC*	9015S
3796B	*JN-MN*	**417344**!
3797B	*JN-MN*	**418028**
3797B	*JN-MN*	455137!
3799B	*JN-MN*	**416239**!*
37X52X8	*SIMRT*	37X52X8
37X52X8SC	*TRSCM*	37X52X8
37X52X8TC	*TRSCM*	37X52X8
380-8001	*STEM*	**417507**
380-8009	*STEM*	370145A
380-8010	*STEM*	AR5+370014A
380-8011	*STEM*	AR4+370011A
380-8014	*STEM*	370015A
380-8017	*STEM*	**418028**
380-8018	*STEM*	**417134**
380-8020	*STEM*	AR1+370011A
380-8025	*STEM*	370002A
380-8027	*STEM*	370179A!
380-8028	*STEM*	370007A
380-8030	*STEM*	AR+370018A
380-8032	*STEM*	AR6+370012A
380-8034	*STEM*	370012A
380-8035	*STEM*	370012A
380-8036	*STEM*	370001A
380-8039	*STEM*	AR12+370033A
380-8042	*STEM*	370002A
380-8044	*STEM*	370054A
380-8045	*STEM*	370057A
380-8046	*STEM*	370124A
380-8052	*STEM*	370015A
380-8053	*STEM*	370124A
380-8054	*STEM*	370131A
380-8056	*STEM*	370131A
380-8060	*STEM*	AR10+370020A
380-8063	*STEM*	370132A
380-8064	*STEM*	370048A
380-8066	*STEM*	370150A
380-8067	*STEM*	370131A
380-8071	*STEM*	370011A
380003TX	*SPG*	380003A
380003TXO	*SPG*	380003A
38000968	*CUMMI*	5742
380019C91	*IH*	370023A
380023TXO	*SPG*	380023A
380031TX	*SPG*	**415058**
3800643	*CUMMI*	39861
3800968	*CUMMI*	39861
3800969	*CUMMI*	5741
3800969	*CUMMI*	927312
3801138	*CUMMI*	39875
380157R91	*IH*	476124=
380158R91	*IH*	476124=
380182R91	*IH*	**471504**
380183R91	*IH*	**471504**
380185R91	*IH*	**417492**
380186R91	*IH*	**450621**
380186R92	*IH*	**450621**
380200R91	*IH*	**471271**!
380200R92	*IH*	**471271**!
380201R91	*IH*	**471271**!
380212R91	*IH*	**471271**!
380213R91	*IH*	**471271**!
3802B	*JN-MN*	**470898**
3802SS0	*SPG*	3802=
3803477	*CUMMI*	600462
3803727	*CUMMI*	39861
3803894	*CUMMI*	5728
3803894	*CUMMI*	600211$
38040	*C-R*	8370S
3804304	*CUMMI*	5734
38046	*EATON*	**415351**!
3804744	*CUMMI*	5732
38053	*ALLCH*	**415007**
380637R91	*CASE*	200335
3806744	*CUMMI*	100467$
380750	*GMC*	**472439**
380768R91	*IH*	**412119**!
380769	*GMC*	7188S
380769R91	*IH*	**412119**!
380770R91	*IH*	**411394**!
380771R91	*IH*	**411394**!
38085	*C-R*	455178=
380890R91	*IH*	**472439**
380921R91	*IH*	**472179**
380922R91	*IH*	**472179**
380959R91	*IH*	**476838**!
380960R91	*IH*	**476838**!
381-0036	*STEM*	370001A
381-0053	*STEM*	370124A
381-0056	*STEM*	370131A
381-0064	*STEM*	370048A
381041R91	*IH*	**415001**!
381042R91	*IH*	**417316**!
381043R91	*IH*	**455500**!
381043R91	*IH*	**455500**
381055R91	*IH*	476124=
3811035	*WOOL*	**417158**!
38114	*C-R*	**417504**
38115	*C-R*	**417504**
38116	*C-R*	**417504**
38121	*TROS*	5924
381232R91	*IH*	**471267**!
38128	*SPICE*	722109
381299	*WHITE*	**455151**
38133	*OLIVE*	**471192**
3813621	*GMC*	**471193**
381363C91	*IH*	**474276**
381363C92	*IH*	**474276**
38141	*TROS*	493291
3814160	*GMC*	7537S
3814280	*GMC*	**414045**!
38145	*C-R*	**455032**!*
38147	*OLIVE*	**471689**!
381480R1	*IH*	**472258**!
381480R91	*IH*	**472258**!
3814R	*SPG*	3814N
3815	*FWD*	**471192**
38159	*SPICE*	**472258**!
38159	*VIC*	**472258**!
3815B	*JN-MN*	**470625**!
38160	*C-R*	**455032**!
381653	*WHITE*	**415995**!
3817	*FWD*	**473228**
381721R91	*IH*	**471224**!
3817308	*GMC*	**417355**!
3817308	*GMC*	485497
381742R91	*IH*	**470380**!
381743R91	*IH*	**472924**!
3817883	*GMC*	8460N
3818896	*GMC*	8975S
38190	*C-R*	**455189***
381907R91	*IH*	**473367**
381908R91	*IH*	**473419**!
381917R91	*IH*	**415483**
3819584	*GMC*	8477S
3819774	*CUMMI*	99650
382-8028	*STEM*	370007A
382-8032	*STEM*	AR6+370012A
382-8034	*STEM*	370012A
382-8035	*STEM*	370012A
382-8036	*STEM*	370001A
382-8039	*STEM*	AR12+370033A
382-8042	*STEM*	370002A
382-8044	*STEM*	370054A
382-8045	*STEM*	370057A
382-8052	*STEM*	370015A
382-8053	*STEM*	370124A
382-8056	*STEM*	370131A
382-8056	*STEM*	**417507**
382-8060	*STEM*	AR10+370020A
382-8063	*STEM*	370132A
382-8066	*STEM*	370150A
382-8071	*STEM*	370011A
3820196	*CHRYS*	3210
3820197	*CHRYS*	493291
3820419	*GMC*	**472258**!
3820917	*CUMMI*	99351
3820918	*CUMMI*	99333
3821	*FWD*	**472179**
382119	*WHITE*	**418028**
382119	*WHITE*	455137!
3821395	*CHRYS*	**473204**
3821401	*CHRYS*	710005
382150	*WHITE*	**471141**!
3821519	*CHRYS*	**415960**!
3821656	*GMC*	8974S
3821783	*CUMMI*	5741
38220	*C-R*	**455189**
38220	*TROS*	5877
3822107	*CHRYS*	**472015**!
3822192	*CHRYS*	**415379**
382220R91	*IH*	**472070**
382229R91	*IH*	**471649**!
382230R91	*IH*	**471765**!
3822829	*CHRYS*	**413248**
3823	*FWD*	**473238**
382386	*WHITE*	**415449**!
382387	*WHITE*	**472636**!
3824	*FWD*	**472394**
3824B	*JN-MN*	**415027**
3824B	*JN-MN*	**415027**!
3825	*FWD*	**472397**!
38250	*C-R*	**455189***
3825136	*GMC*	8460N
3825B	*JN-MN*	**455008**
3826129	*GMC*	**411330**!
382663	*GMC*	**472082**
3827	*FWD*	**472016**
3827712	*CHRYS*	370132A
382776R91	*IH*	**416664**!
382778R91	*IH*	**417349**!
382779R91	*IH*	**417349**!
3827B	*JN-MN*	**415138**!*
3828009	*STEM*	370145A
3828010	*STEM*	AR5+370014A
3828011	*STEM*	AR4+370011A
3828017	*STEM*	**418028**
3828018	*STEM*	**417134**
3828025	*STEM*	370002A
3828027	*STEM*	370179A!
3828585	*GMC*	7934S
382868C91	*IH*	**473463**
3828916	*GMC*	2081
3828B	*JN-MN*	**415227**!
3829	*FWD*	**472636**!
3829B	*JN-MN*	**415076***
383-0136	*STEM*	370001A
383-0136	*STEM*	380001A
383-0139	*STEM*	370033A
383-0153	*STEM*	370124A
383-0156	*STEM*	370131A
383-0156	*STEM*	380131A
383-0164	*STEM*	380048A
383-0171	*STEM*	370011A
383-0264	*STEM*	380048A
38301	*TROS*	42763
3830108	*CHRYS*	3095
3830109	*CHRYS*	3103!
3830B	*JN-MN*	**417621**!
3831	*FWD*	**413247**!
383133R91	*IH*	472129=
383159R91	*IH*	**473238**!
383160R91	*IH*	**473238**!
3831716	*GMC*	240735
3832368	*GMC*	8610
3832418	*GMC*	8660S
383287	*WHITE*	**417344**!
3833	*FWD*	**415449**!
383314R91	*IH*	**473367**
383315R91	*IH*	**473419**!
383328R91	*IH*	**471224**!
383332R91	*IH*	**471649**!

! Industrial Size/Type * Minor Width Difference $ F-M Number Is Part Of A Kit
= The U.S. customer service number is 877-4-TIMKEN. The Canadian customer service numbers are 800-565-4927 (English) and 800-565-0438 (French-Canadian).

Mfr. No.	Name	Zero Duplication or Recommended Industrial
383333R91	IH	471765!
383340R91	IH	470380!
383341R91	IH	472924!
3833648	GMC	8835S
383387R91	IH	472070
383394R91	IH	416664!
383395R91	IH	416664!
3833OS	JN-MN	450593!
3835	FWD	415458!
383516C91	IH	410308!
383516C91	IH	473468
383524	GM	424
3835625	GMC	450375!
3835625	GMC	6936S!
3835625	GMC	9845
3835774	GMC	5419$
3835946	GMC	6936S
38360	TROS	50402
3836B	JN-MN	415303!*
3837	FWD	417316!
3837	OLIVE	417316!
383701R91	IH	472129=
383727-C1	IH	730008
383728-C1	IH	730030
38373	JOY	42352S
383733R91	IH	472129=
383748R91	IH	473474
3837560	GMC	8705S
3837716	GMC	240735
3837B	JN-MN	472015!
3837E	GOODM	450400
383860R91	IH	473423
3838B	JN-MN	411394!
3839	FWD	417158!
383968R1	IH	J1113
384	IDECO	417603!
38407	OLIVE	473179
384090R91	IH	471424!
3841	FWD	417487
384115	WHITE	472636!
384116	WHITE	415449!
384132	GMC	9015S
3841372	GMC	8750S
3841532	GMC	9015S
384156R91	IH	472018
38427	DANA	9316
384272	SPICE	9316
384301	WHITE	471271!
384334R91	IH	473230!
384342	WHITE	370036A
384342	WHITE	370349A
3843648	GMC	8835S
384386R91	IH	472164!
384387R91	IH	472164!
3844	FWD	417354!
3845021	GMC	473016!
3846D	GOODM	415138!
3846E	GOODM	415138!
384804	WHITE	416271!
3848353	GMC	9613S
3848354	GMC	9613S
384879R91	IH	416294!
3848OS	JN-MN	471532
38493TB	TRSCM	415458!
3849OS	JN-MN	471646!
384K1	DIA	474276!
385	IDECO	455251H
385038R91	IH	471466!
385039R91	IH	471466!
38504	HYST	413469!
385042	CHRYS	473234!
385043	CHRYS	472439
385076R91	IH	471653!
385077R91	IH	471653!
3850E	GOODM	415066
385134R91	IH	471413!
38514SA	TRSCM	455033
3851703	GMC	481181!
3851853	GMC	7338N
38520	C-R	98X120X13
38524TA	TRSCM	417366!
3852984	GMC	8460N
38531A	HERCU	470712!
38534SA	TRSCM	415958!
385397	WHITE	455612=
38544	EATON	416956
38551	EATON	416956
38551602	IVECO	713131
3855K	MINNM	5756
385692R91	IH	471413!
385703R91	IH	471267!
385703R92	IH	471267!
385704R91	IH	471267!
385766R91	IH	472299
3857716	GMC	8975S
3857731	GMC	8974S
3858096	GMC	9195S=
385819-C91	IH	HU012A
385820-C1	IH	730026
3858316	GMC	8976S
385864R91	IH	452222!
385865R91	IH	452222!
385871R91	IH	473419
385872R91	IH	473419
3858832	GMC	470380!
38590	C-R	200948
38597	CHRYS	410308!
385FM224	C-R	415960*
3860095	GMC	3945
386169C91	IH	470565=
38618	C-R	476098N=
38625	C-R	417210!
3862674	CUMMI	40392
38631	C-R	417210!*
38633	C-R	417210!
3863B	JN-MN	415294!
38640	C-R	417210!
38641	C-R	417210!
3864171	GMC	9015S
38643	C-R	417210!
386455R91	IH	472924!
386456R91	IH	472924!
386460R91	IH	472299
386461R91	IH	417492
38647	C-R	417210!
38649	C-R	3893V
38653	C-R	417210!
3865358	GMC	6818
38654	C-R	417210!
38654	DENCO	418028
38654	DENCO	455137!
386590TD	SPG	386590A
3865924	GMC	473179
3866	FWD	457874
38666	C-R	417211!
38667	C-R	417211!
3866719	GMC	472705!
38668	C-R	417211!
3866845	GMC	471707N
38669	C-R	417211!
3866992	GMC	470530!
38670	C-R	417211!
3867349	CHRYS	370023A
38676	C-R	417211!
38677	C-R	417211!
3867960	GMC	471271!
3867961	GMC	471272!
38680	C-R	417211!
38682	C-R	416345!
38686	C-R	416345!
38686	C-R	455033
38687	C-R	416345!
38687	C-R	455033
38691	C-R	416345!*
38692	C-R	416345!*
38695	C-R	416345!
38695	C-R	455033
38696	C-R	416345!
38696	C-R	455033
3869AB	CASE	476838!
386W222	C-R	455008
386W224	C-R	415960
386W224-M1	C-R	455008
386W226	C-R	417485
387-8736	STEM	370001A
387-8755	STEM	370131A
387-8756	STEM	370131A
387-8763	STEM	370132A
387-8764	STEM	370048A
38700	C-R	416345!
38701	C-R	416345!
387015C1	IH	5111
387015C1	IH	5111S
38703	C-R	415697!*
387036C1	IH	321460
387036C91	IH	321460
38704	C-R	416345!
387054	WHITE	473367
387054	WHITE	473367!
38706	C-R	415697!
38706	C-R	455547
38707	C-R	415697!
38708	C-R	415697!
3870890	CUMMI	39715
38709	C-R	370033A
38710	C-R	415697!
38710	C-R	455547
38711	C-R	415697!
38712	C-R	417366!*
38713	C-R	415697!*
3871619	GMC	9613S
3871649	GMC	470380!
3871649	GMC	472189A!
387178	WHITE	472636!
38718	C-R	417366!*
38719	C-R	417366!*
3872	FWD	455584
387212	C-R	417480!
387216	C-R	415082
387216	GAL	415082
387216M1	C-R	415082
387218	C-R	455280
387218M1	C-R	455280
387220	C-R	415007
387220	GAL	415007
387220	GWI	415007
387220M1	C-R	415007
387222	C-R	455008
387222M1	C-R	455008
387224	C-R	455008!
387224	FAIRB	415960!
387224	GOODM	415960!
387224M1	C-R	415960
387226	C-R	417485
387226M1	C-R	417485
387228	C-R	417158!
387230	C-R	417159
38724	C-R	55087=
38728	C-R	55337
3873	C-R	417350!
38730	C-R	417366!*
387309C91	IH	417316=
38731	C-R	417366!*
38732	C-R	417366!
387328	GR-DV	417211!
38733	C-R	417366!
38734	C-R	417366!
38739	C-R	415148!
3873M1	C-R	417350!
3873T8	C-R	417350!
3874	C-R	6358
3874	FWD	416077
387408R91	IH	480268N=
3874340	GMC	5119
3874368	GMC	9128S
3874372	GMC	AR21
38745	C-R	415958!
38745	C-R	415958
38746	C-R	370023A
38747	C-R	415958
38748	C-R	417505
387487	WHITE	470334!
38749	C-R	417505
38750	C-R	380023A
387596	WHITE	415371
3875B	JN-MN	417211!*
3876191	GMC	8705S
3876192	GMC	7934S
3876B	JN-MN	473229
38774	C-R	370023A
38774	C-R	416892
38774	C-R	456618
38777	C-R	456618
38778	C-R	456618
38779	C-R	370023A
38779	C-R	380023A
3877B	JN-MN	472164!
3878	SPG	1873
38780	C-R	370023A
38780	C-R	380023A
38782	C-R	370023A
38782	C-R	380023A
38783	C-R	370023A
3878447	CHRYS	471539
3878447	GMC	471539!
3878753	STEM	370124A
3878B	JN-MN	472144!*
3879527	GMC	411330!
3879529	GMC	417196!
3879536	GMC	417355!
3879536	GMC	485497
387B224	C-R	415960
387BMM224	C-R	415960
387F224	C-R	415960
387FF218	C-R	455280
387FM224	C-R	415960!
387FM224	C-R	415960
387HMS217	C-R	415082
387N224-T8	C-R	415960*
387N230	C-R	417159
387W218	C-R	455280*
387W220	C-R	415007*
387W220-M1	C-R	415007*
387W222	C-R	455008*
387W224-M1	C-R	415960
387W226	C-R	417485*
387W230	C-R	417159*
387W230-M1	C-R	417159*

! Industrial Size/Type * Minor Width Difference $ F-M Number Is Part Of A Kit
= The U.S. customer service number is 877-4-TIMKEN. The Canadian customer service numbers are 800-565-4927 (English) and 800-565-0438 (French-Canadian).

Mfr. No.	Name	Zero Duplication or Recommended Industrial
387W3	C-R	417350!
387W3-M1	C-R	417350!
387WL224	C-R	415960!
3880	GARLK	471760
3880674	GMC	6358
3880944	GMC	AR22
3880B	JN-MN	470530!
38810	C-R	416043
38816D	IH	474253
3881B	JN-MN	473463
388247C92	IH	HU009A
3883	SPG	55X82X12!
3883386	GMC	2081
38835	CHRYS	470898
388357	GMC	8940S
3883621	CUMMI	37586
3883621	CUMMI	600394
3883774	CUMMI	5742
3883775	CUMMI	5741
388506	WHITE	412119!
3885295	GMC	8750S
388770	WHITE	415137!
388770	WHITE	418028
38880	C-R	710526
388822C91	IH	476470
388823C91	IH	416130!
388974	GMC	9049
388974	GMC	9049N
3889B	JN-MN	471504!
388WL222	C-R	455008
389083R91	IH	415871
389160001	WHITE	472636!
3891B	JN-MN	417356!
3891B	JN-MN	455188
3892794	CUMMI	5734
3892B	JN-MN	416364!*
3893105	CHRYS	370001A
3893105	CHRYS	380001A
3893149	CHRYS	HU009A
3893298	GMC	5072
3893299	GMC	5072$
389405R91	IH	470530!
389405R92	IH	470530!
389406R91	IH	470530!
389407R91	IH	472439
389407R92	IH	472439
389408R91	IH	472439
3894121	CHRYS	710044
3894131	CHRYS	41461S
3894147	CHRYS	710304
389445R91	IH	471750!
389446R91	IH	471750!
3895020	CUMMI	5728
3895023	CUMMI	5732
3895034	CUMMI	39869
3895B	JN-MN	472409!
3896837	CUMMI	5734
3897B	JN-MN	473215!*
389879	WHITE	415041
389880	WHITE	415021
389881	WHITE	5751
389RC	SUL	472016
38G42	OSHKO	416654
38GX42	OSHKO	416654
38H021	SHOV	474276!
38X50X10.5	FME	223800
38X50X10.5	SPG	223800
38X50X7SC	TRSCM	38X50X7!
38X50X7TC	TRSCM	38X50X7!
38X52X6VAY	TRSCM	1196
38X52X7ASN	ISP	38X52X7
38X52X85SC	TRSCM	38X52X8.5!
38X52X85TC	TRSCM	38X52X8.5!
38X53X8SC	TRSCM	38X53X8
38X53X8TC	TRSCM	38X53X8
38X54X10SC	TRSCM	38X54X10
38X54X10TC	TRSCM	38X54X10
38X54X7SC	TRSCM	38X54X7!
38X54X7TC	TRSCM	38X54X7!
38X55X7SC	TRSCM	38X55X7!
38X55X7TC	TRSCM	38X55X7!
38X56X10SC	TRSCM	38X56X10
38X56X10TC	TRSCM	38X56X10
38X58X8SC	TRSCM	38X58X8
38X58X8TC	TRSCM	38X58X8
38X60X10SC	TRSCM	38X60X10
38X60X10TC	TRSCM	38X60X10
38X60X8ASN(32)	ISP	38X60X8
38X62X7SC	TRSCM	38X62X7
38X62X7TC	TRSCM	38X62X7
38X65X8SC	TRSCM	38X65X8!
38X65X8TC	TRSCM	38X65X8!
38X68X10SC	TRSCM	38X68X10
38X68X10TC	TRSCM	38X68X10
38X68X8SC	TRSCM	38X68X8!
38X68X8TC	TRSCM	38X68X8!
38X70X10SC	TRSCM	38X70X10
38X70X10TC	TRSCM	38X70X10
38X72X10SC	TRSCM	38X72X10
38X72X10TC	TRSCM	38X72X10
38X74X11SC	TRSCM	38X74X11
38X74X11TC	TRSCM	38X74X11
38X74X8SC	TRSCM	38X74X8!
38X74X8TC	TRSCM	38X74X8!
39	WGEAR	470565!
390-7008	STEM	370029A
390-7025	STEM	370027A
390-7048	STEM	370046A
390-9001	STEM	AR20+370004A
390-9002	STEM	416892
390-9003	STEM	416892
390-9004	STEM	415058
390-9005	STEM	370021A
390-9006	STEM	370019A
390-9007	STEM	416865
390-9010	STEM	370033A
390-9012	STEM	370023A
390-9015	STEM	417505
390-9018	STEM	370008A
390-9019	STEM	370057A
390-9021	STEM	370027A
390-9022	STEM	370005A
390-9024	STEM	370006A
390-9025	STEM	370019A
390-9026	STEM	370019A
390-9032	STEM	370036A
390-9032	STEM	370349A
390-9032	STEM	380036A
390-9033	STEM	416888
390-9034	STEM	370195A
390-9035	STEM	370047A
390-9036	STEM	415437
390-9038	STEM	370046A
390-9039	STEM	370191A
390-9046	STEM	370027A
390-9048	STEM	370069A
390-9048	STEM	380069A
390-9050	STEM	370069A
390-9050	STEM	380069A
390-9053	STEM	AR23+370120A
390-9056	STEM	370023A
390-9056	STEM	415958
390-9056	STEM	417505
390-9057	STEM	417506
390-9060	STEM	370005A
390-9061	STEM	370030A
390-9062	STEM	370121A
390-9063	STEM	2081
390-9064	STEM	370021A
390-9065	STEM	370019A
390-9070	STEM	370006A
390-9073	STEM	370003A
390-9081	STEM	370173A
390-9087	STEM	370006A
390-9088	STEM	370021A
390-9089	STEM	370069A
390-9089	STEM	380069A
390-9090	STEM	415058
390-9092	STEM	370019A
390-9094	STEM	416892
390-9095	STEM	370030A
390-9096	STEM	370019A
390-9097	STEM	370005A
390-9098	STEM	370003A
390-9099	STEM	370023A
390-9099	STEM	415958
390-9099	STEM	417505
390-9111	STEM	370220A
3900709	COND	39803
3900709	CUMMI	39803
3900709080	CUMMI	39803
3901014	GMC	5453
390106	HYST	417247!
3901979	COND	39804
39022	OLIVE	470334!
3904087	COND	39805
3904088	COND	39806
3904089	COND	39805
3904090	COND	39806
3904353	CUMMI	39803
390490C91	IH	476574N
390491C91	IH	416500
3904B	JN-MN	471141!
3905405	GMC	481181!
390558	AUTOZ	35634
39058	OLIVE	473215!
390586	AUTOZ	35633
390589	AUTOZ	35641
390603	AUTOZ	TCS45987
390606	AUTOZ	35652
3906080	CUMMI	99253
3906081	CUMMI	99491
390613	AUTOZ	BS40654
390659	WHITE	476838!
390680	AUTOZ	16270
390681	AUTOZ	16271
390683	AUTOZ	16272
390684	AUTOZ	16273
390697	AUTOZ	70725
39070	C-R	710278
390734	AUTOZ	TCS45979
3907B	JN-MN	415150!*
39085	C-R	476517
3909410	CUMMI	39805
390RC	SUL	473245!
391-0003	STEM	416892
391-0004	STEM	415058
391-0012	STEM	370023A
391-0060	STEM	370005A
391-0064	STEM	370020A
391-0064	STEM	370021A
391-0070	STEM	370006A
391-0073	STEM	370003A
3910B	JN-MN	417205!*
3911035	WOOL	455406!
39111	FI-CO	472439
39114	FI-CO	474278!
39115	FI-CO	474256
39118	C-R	100X120X10
39118	SPICE	5778
39118	VIC	5778
39118-2	DANA	5778
3911917	GMC	470530!
3911B	JN-MN	455151
3912	FI-CO	471344
39120	C-R	100X120X12!
39120	C-R	231002
3912016	GMC	416273!
39122	C-R	231002
3912202	GMC	472164!
3912446	GMC	481181!
39125	C-R	100X120X12V!
39125	C-R	231004
3912RC	SUL	474265
3913	FI-CO	471571
39135	C-R	100X125X12!
39135	C-R	231003
39136	C-R	100X125X12V!
39139	C-R	231003
39140	TROS	3210
3914761	COND	39806
391483	BR-ST	471267!
3914B	JN-MN	55223*=
39155	C-R	100X130X12!
39156	C-R	100X130X12!
39158	C-R	100X130X12!
39159	C-R	100X130X12V
39160	TROS	470625!
39161	TROS	6489
39162	TROS	480630
3917	FI-CO	474255
39170	C-R	710351
39180	C-R	100X140X13
3918B	JN-MN	415938
3919309	GMC	471424!
391975R91	IH	412119!
391976R91	IH	412119
392-9001	STEM	AR20+370004A
392-9007	STEM	416865
392-9010	STEM	370033A
392-9012	STEM	370023A
392-9018	STEM	370008A
392-9019	STEM	370057A
392-9021	STEM	370027A
392-9032	STEM	370036A
392-9032	STEM	380036A
392-9033	STEM	416888
392-9035	STEM	370047A
392-9036	STEM	415437
392-9038	STEM	370046A
392-9046	STEM	370027A
392-9048	STEM	370069A
392-9048	STEM	380069A
392-9053	STEM	AR23+370120A
392-9057	STEM	417506
392-9062	STEM	370121A
392-9063	STEM	2081
392-9081	STEM	370173A
392-9087	STEM	370006A
392-9088	STEM	370021A
392-9089	STEM	370069A
392-9089	STEM	380069A
392-9090	STEM	415058
392-9092	STEM	370019A
392-9094	STEM	416892
392-9095	STEM	370030A
392-9096	STEM	370019A
392-9097	STEM	370005A

! Industrial Size/Type * Minor Width Difference $ F-M Number Is Part Of A Kit

= The U.S. customer service number is 877-4-TIMKEN. The Canadian customer service numbers are 800-565-4927 (English) and 800-565-0438 (French-Canadian).

Mfr. No.	Name	Zero Duplication or Recommended Industrial
392-9098	*STEM*	370003A
392-9099	*STEM*	**417505**
392-9111	*STEM*	370220A
392-9112	*STEM*	**415058**
392-9131	*STEM*	380003A
3920121	*MARMO*	**473215**!
3920122	*MARMO*	**473367**!
3920122	*MARMO*	**473367**
3920123	*MARMO*	**470088**
3920125	*MARMO*	**415458**!
3920126	*MARMO*	**472636**!
39202	*TROS*	40369S
392048	*WHITE*	**415027**
39210	*FI-CO*	**471765**!
3921012	*GMC*	9845
3921072	*GMC*	8611N
3921194	*GMC*	9845
39216	*FI-CO*	**471567**!
3921927	*COND*	39804
3921927	*CUMMI*	39804
392194	*HYST*	**416130**!
3921972	*GMC*	5092$
3921B	*JN-MN*	**471271**!
3922	*FI-CO*	**450604**
3922598	*CUMMI*	907104
3922B	*JN-MN*	**416345**!
3922B	*JN-MN*	455033
39235	*FI-CO*	**472924**!
39236	*FI-CO*	**472636**!
392363R91	*IH*	**415995**!
392363R91	*IH*	**415995**!
39237	*FI-CO*	**473225**!
392378R91	*IH*	340724!
3924031	*GMC*	8460N
3924032	*GMC*	712598
3924033	*GMC*	**411330**!
3924127	*GMC*	**473179**
39245	*C-R*	**417967**!*
39246	*SPICE*	710067
392461	*DANA*	710067
392462	*DANA*	710067
392463	*DANA*	710067
392464	*DANA*	710067
392465	*DANA*	710067
3924987	*CUMMI*	100310
3924B	*JN-MN*	55223=
39250	*C-R*	**417967**!
39251	*C-R*	**417967**!
3925529	*CUMMI*	917157
39265	*C-R*	**415034**!
39266	*C-R*	**415034**!
3926B	*JN-MN*	**472287**!*
39275	*C-R*	**415034**!*
39276	*C-R*	**415034***=
39279	*C-R*	**415034**!
39280	*C-R*	**415034**!
3929	*FI-CO*	**471765**!
3929034	*STEM*	370195A
3929130	*STEM*	**415058**
392929C91	*IH*	**472164**!
392929C92	*IH*	**472164**!
3929B	*JN-MN*	**415645**!
3929B	*JN-MN*	455104
392RC	*SUL*	**471766**!
393-0103	*STEM*	**416892**
393-0104	*STEM*	**415058**
393-0112	*STEM*	370023A
393-0112	*STEM*	380023A
393-0148	*STEM*	380069A
393-0173	*STEM*	370003A
393-0173	*STEM*	380003A
393-0203	*STEM*	**416892**
393-0204	*STEM*	**415058**
393-0273	*STEM*	380003A
3930B	*JN-MN*	**411376**!
39310	*C-R*	**455191***!
39316	*C-R*	**416654**!
393180R91	*IH*	335924N
39320	*C-R*	**455191***
39320	*TROS*	450044
3932255	*GMC*	9613S
3932283	*GMC*	**253747**=
3932286	*GMC*	**471341**=
3932288	*GMC*	7412H=
39325	*C-R*	**455191***
39326	*C-R*	**455191***
3932B	*JN-MN*	**417562***
3933B	*JN-MN*	**417562***
3934486+600363	*SPG*	600363
393453R91	*IH*	**450621**
3935	*NATL*	5699
39350	*C-R*	**415263***
393516C91	*IH*	**410308**!
393516C91	*IH*	473468
393544R91	*IH*	**472258**!
393545R91	*IH*	**471424**!
393546R91	*IH*	**472018**
39355	*C-R*	**415263**
3935959	*CUMMI*	39803
3936B	*JN-MN*	**416865**!*
3937	*UNIVE*	**471984**
39370	*C-R*	**415263***
39371	*C-R*	**415263***
39378	*C-R*	370008A
3937B	*JN-MN*	**472354**!
39380	*C-R*	370008A
39380	*C-R*	**417506**
39382	*CHRYS*	**413469**!
39385	*C-R*	6270
393879	*WHITE*	**470712**!
39388	*CHRYS*	**472179**
3938B	*JN-MN*	**473232**
3940	*C-R*	10X19X7!
3940	*C-R*	221040
3940108	*GMC*	9316
39407A	*C-R*	**470530**!
3940B	*JN-MN*	450311*
39410	*C-R*	**417506**
39412	*SHOV*	**415991**
39412	*SHOV*	**415991**!
394163	*WHITE*	**476838**!
3941847	*GMC*	**473228**
3941B	*JN-MN*	**455280***
3942	*C-R*	10X22X7V
39420	*C-R*	**417506**
394224	*C-R*	55469
394227	*C-R*	2081
39422A	*C-R*	**415449**!
39423	*C-R*	370005A
39423	*C-R*	**417506**
394233	*WHITE*	**416865**!
39425	*C-R*	**417506**
3942535	*CUMMI*	39804
39426	*C-R*	AR25+370198A
3942CAO	*SPG*	3942
3943	*C-R*	455509
39430	*C-R*	**417506**
39431	*MISSI*	**471785**!
394312	*MISSI*	**471785**!
394313	*MISSI*	**474274**
394314	*MISSI*	**473239**
394316	*MISSI*	**471224**!
39432	*MISSI*	**474274**
394322	*MISSI*	455321
394323	*MISSI*	**411376**!
39433	*MISSI*	**473239**
39435	*MISSI*	**471554**
39439	*VIC*	9316
39439-2	*SPICE*	9316
39440	*C-R*	6270
39440	*TROS*	5921
394451C91	*IH*	**470898**
39448	*MATHR*	**417433**
3945	*C-R*	10X22X7!
394504	*WHITE*	417267
394511	*WHITE*	**415711**
3945B	*JN-MN*	**476470**
394629	*WHITE*	**472354**!
394686C91	*IH*	9912
3947	*C-R*	10X22X7V
394735C91	*IH*	HU036A
394745	*WHITE*	475348N
394746	*WHITE*	5M466
394761	*WHITE*	**472636**!
3948889	*GMC*	730031
394894C91	*IH*	370001A
3948BHR	*SPG*	5604
39494SA	*TRSCM*	**415034**
394976	*VICK*	**474260**
3950	*C-R*	10X24X7
3951	*CALSO*	**471870**!
395125C91	*IH*	9773
3952	*C-R*	10X25X7
39524SA	*TRSCM*	**455191**
3952B	*JN-MN*	**416107**!
3952B	*JN-MN*	455073
3953412	*GMC*	9406S
395500R91	*IH*	**450639**
395591	*WHITE*	**471567**!
3956523	*FORD*	4162
3958001	*GMC*	5092
3958078	*GMC*	8835S
3960	*C-R*	10X26X7
3960335	*GMC*	8660S
3960860	*GMC*	**471466**!
396148C91	*IH*	**415995**!
396148C91	*IH*	**415995**!
3961VGO	*SPG*	2260
3962863	*GMC*	5072
39636	*SPG*	39636
396395-C92	*IH*	370021A
396470	*GMC*	2043
3964B	*JN-MN*	**416706**!
3964BXR	*SPG*	1969
3964BXR	*SPG*	48X63X9!
3965092	*GMC*	4739
3965129	*GMC*	**472394**
396524	*WHITE*	**473462**
396526C91	*IH*	370019A
3965B	*JN-MN*	**473010**
3965LPD	*JN-MN*	**473010**
3965LUP	*JN-MN*	**473010**
39667A	*C-R*	6098=
3966B	*JN-MN*	**473211**!
3966BX	*SPG*	3966
3967875	*GMC*	**473313**
3967876	*GMC*	**410308**!
3967876	*GMC*	473468
3967B	*JN-MN*	470059
3967B	*JN-MN*	**470380**!
3967CA	*SPG*	3967
3967CAR	*SPG*	1962
3968050	*GMC*	**473214**!
3968B	*JN-MN*	**472185**!
39693	*DANA*	9864S
39693	*SPICE*	9864S
396993	*WHITE*	**415995**!
3969B	*JN-MN*	**417362**!
397-9703	*STEM*	**416892**
397-9704	*STEM*	**415058**
397-9712	*STEM*	370023A
397-9715	*STEM*	370023A
397-9748	*STEM*	370069A
397-9748	*STEM*	380069A
397-9757	*STEM*	**417506**
397-9760	*STEM*	370005A
397-9761	*STEM*	370030A
397-9764	*STEM*	370021A
397-9765	*STEM*	370019A
397-9770	*STEM*	370006A
397-9773	*STEM*	370003A
39708	*MATHR*	50568
397143	*WHITE*	**472185**!
397144	*WHITE*	**473010**
3971B	*JN-MN*	**415725**!
3973135	*GMC*	5115
397325	*WHITE*	**473228**!
3973462	*GMC*	9845
397470	*GMC*	**470380**!
3974846	*GMC*	370106A
3974847	*GMC*	2081
3974848	*GMC*	2055
3974849	*GMC*	**417355**!
3974849	*GMC*	485497
3974850	*GMC*	6358
3975731	*GMC*	**473229**
3975B	*JN-MN*	**471870**!
39760	*C-R*	710371
3976B	*JN-MN*	**412473**!
3977359	*GMC*	2286
3979613	*GMC*	9316
3979614	*GMC*	5778
3979615	*GMC*	6808N
3979616	*GMC*	5778
3979626	*GMC*	**470954**
3979735	*STEM*	370047A
3979B	*JN-MN*	**473367**!
3979B	*JN-MN*	**473367**
3980267	*GMC*	9845
39805	*MATHR*	39805
39807	*MATHR*	39807
39813	*MATHR*	**415937**
3982B	*JN-MN*	**417171**!
3983	*NATL*	8835S
398311	*WHITE*	**473231**!
398321R91	*IH*	**470625**!
3983488	*GMC*	5132
39838	*C-R*	335924N
39842	*C-R*	457294
39850	*C-R*	**415187**
39851	*C-R*	**415187**
39852	*C-R*	**415187**
3985CA	*SPG*	3985
3985CAR	*SPG*	1992
3985CAR	*SPG*	45X65X8!
39860	*C-R*	45187S
3986B	*JN-MN*	**472258**!*
3986CAR	*SPG*	224820
3986CAR	*SPG*	48X62X8!
39870	*C-R*	**415187**
398744	*CATER*	**417562**
398770	*GMC*	HU009A
3987936	*GMC*	7412S
3987937	*GMC*	**481181**!
39880	*C-R*	**415035**
39880	*C-R*	**415035***
39883	*C-R*	**415035***
39885	*C-R*	**415035**

! Industrial Size/Type * Minor Width Difference $ F-M Number Is Part Of A Kit
= The U.S. customer service number is 877-4-TIMKEN. The Canadian customer service numbers are 800-565-4927 (English) and 800-565-0438 (French-Canadian).

Mfr. No.	Name	Zero Duplication or Recommended Industrial
39895	C-R	**415035**
39895	C-R	**415035**!
3989505	GMC	8835S
3989506	GMC	8835S
3989CA	SPG	1974
398GX	OSHKO	**416654**
39905	C-R	**415035**
39906	C-R	**415035**
39906	C-R	**415035**!
39915	C-R	**415035***
39915	MATHR	5609
399162	WHITE	**470898**!
39920D	IH	**470334**!
39921	C-R	**415035***
39921	C-R	456967V!
39922	C-R	**415035***
39922	C-R	475845!
39923	C-R	**415035**
39923	C-R	475845!
39926	C-R	**415035**
39926	C-R	**415035**!
39927	C-R	**415035**!
39927	C-R	**415035**
39930	C-R	**415035**=
39931	C-R	**415035**!
39931	C-R	**415035**
39932	C-R	456967V
39933	C-R	**415035**!
39933	C-R	**415035**
39934	C-R	**415035**
39935	C-R	**415035***
39935	CLARK	**471689**!
399356	WHITE	**415043**
39937	C-R	**415035**
39938	C-R	**415035**
3993RC	SUL	**415938**
399499	HYST	**417247**!
3995B	JN-MN	**416921**!
39961	C-R	345035
39970	C-R	**415035**!
39970	C-R	**415035**
39971	C-R	**415035**
39971	C-R	**415035**!
399736C91	IH	**415483**!
39975	C-R	**417356**!
39975	C-R	455188
39979	C-R	AR12+370033A
39979	C-R	AR25+370198A
399798R91	IH	**416664**!
3998	CINMI	**470712**!
39980	C-R	**417356**!
39980	C-R	455188
39981	C-R	**417356**!
39981	C-R	455188
39982	C-R	**417356**!
39983	C-R	**417356**!
39984	C-R	**417356**!
39984	C-R	455188
39985	C-R	**417356**!
3998519	GMC	8660S
399857	WHITE	**470530**!
39988	C-R	AR12+370033A
3998OS	JN-MN	**415196**!*
39990	C-R	AR12+370033A
39991	C-R	**417357**
39991	C-R	455192!
39993	C-R	**417357**
39994	C-R	**417357**
39997	C-R	**417357**
39997	C-R	455192!
39998	C-R	**417357**
39999	C-R	**417357**
3999B	JN-MN	**418028**
3999B	JN-MN	455137!
399AMM3	C-R	**415995**!
399B230	C-R	**416654***
399B3	C-R	**415995**
399B3	C-R	**415995**!
399BM3	C-R	**415995**!
399BM3	C-R	**415995**!
399C3	C-R	**415995**!
399C3	C-R	**415995**
399E3	C-R	**415995**
399FM28	C-R	**471341**!*
399N230	C-R	**416654**
399W228	C-R	**416921**!
399W228-M1	C-R	**416921**!
399W3-M1	C-R	**415995**!
3A100	AT IM	**476470**
3A2701	FMC	**471870**!
3A2702	FMC	**471271**!
3A2836	AT IM	**474260**
3A2925	AT IM	450545
3A653	AT IM	**471570**!
3A669	AT IM	**473467**!
3A75	AT IM	**471267**!
3A76	AT IM	**471760**
3A89	AT IM	**472705**!
3B1226	CATER	**471821**!
3B1508	CATER	**471442**!
3B3355	CATER	**471224**!
3B3443	CATER	**473460**
3B3443	WESTR	**473460**
3B3657	CATER	**415196**!
3B3716	CATER	**415021**
3B3887	CATER	**473426**
3B3888	CATER	**471504**!
3B5657	CATER	**415196**!
3B5746	CATER	**472287**!
3B7360	CATER	**415458**!
3B7360	WESTR	**415458**!
3B8188	CATER	415899N
3B8188	CATER	**416624**
3B8564	CATER	**474253**!
3B8984	CATER	**471137**
3B9008	CATER	**417191**
3B9008	CATER	456585
3B9116	CATER	**415991**
3B9116	CATER	455146!
3B9369	CATER	**416956**
3B9378	CATER	**417211**!
3B9387	CATER	**417211**!
3BLA0236	WHITE	**470898**!
3CF1157	OLIVE	40085S
3CF1209	OLIVE	**411253**!
3CF1231	OLIVE	**450400**
3D8417	CATER	**415128**
3F0984	CATER	**415351**!
3F1395	CATER	**415196**!
3F3211	CATER	**472439**
3F3709	CATER	**472492**!
3F4991	CATER	**471689**!
3F5791	CATER	**415035**!
3F6605	CATER	**471138**!
3F690	CATER	**480630**!
3F885	CATER	**472439**
3F9351	NATEN	**417191**
3F9351	NATEN	455165!
3F9497	NATEN	**416891**!
3F9498	NATEN	**416891**!
3F984	CATER	**415351**!
3FT39	OSHKO	**417181**!
3G19426	NATEN	**415551**
3H1397	CATER	**473228**
3H1589	LEYLD	**470898**
3H1590	CATER	**415035**
3H2008	CATER	415899N
3H2008	CATER	**416624**
3H2019	CATER	**471787**!
3H2118	LEYLD	**472164**!
3H2129	AU-WS	**471192**
3H7047	AU-WS	**473228**!
3H995	CATER	**417343**!
3HF14	GEM	6597S
3J0366	CATER	**412871**!
3J0370	CATER	413479*
3J0371	CATER	**416271**!
3J0374	CATER	**415938**
3J0375	CATER	**415960**
3J0377	CATER	**415938**
3J0378	CATER	**472572**!
3J1516	CATER	**416380**!
3J1813	CASE	**417487**
3J1813	CATER	**417487**!
3J1813	CATER	**417487**
3J1814	CATER	**416364**!
3J3153	FMC	**472636**!
3J3154	FMC	**417191**
3J3602	FMC	**471271**!
3J365	CATER	**415458**!
3J366	CATER	**412871**!
3J368	CATER	**415295**=
3J369	CATER	**415988**
3J371	CATER	**416271**!
3J372	CATER	**415138**!
3J373	CATER	**471138**!
3J374	CATER	**415938**
3J375	CATER	**415960**
3J377	CATER	**415938**
3J378	CATER	**472572**!
3J4407	CATER	**471554**
3J4544	CATER	**471466**
3J4776	CATER	**473464**
3J4777	CATER	**410987**!
3J484	CATER	**415379**
3J8517	CATER	**415295**
3J8518	CATER	**415138**!
3J8519	CATER	**415938**
3J8520	CATER	**416364**!
3J8521	CATER	**415027**
3J8523	CATER	**415295**
3J9091	CATER	**472016**
3J9092	CATER	**472016**
3J9681	CATER	**415379**
3K0158	CATER	**455948**
3K158	CATER	**455948**
3K2876	CATER	**417484**!
3K2969	CATER	**480630**!
3K3065	CATER	**473237**!
3K3354	CATER	416037=
3K5093	CATER	457808*=
3K6454	CATER	452157!
3K9061	CATER	416037=
3K9121	CATER	**415035**!
3K9612	CATER	**476470**!
3K9615	CATER	**411253**=
3K9619	CATER	**476470**!
3K9704	CATER	**411376**!
3L0642	CATER	**415302**
3L3313	CATER	**416891**!
3L3314	CATER	**417262**=
3L642	CATER	**415302**
3M188	CATER	**471442**!
3M6839	CATER	455029H=
3M6853	CATER	**451583**!
3N0533	CATER	**417171**!
3NE-08	GEM	6597S
3NF-01	GEM	240949
3NF12	GEM	6597S
3PS396	C-P	**415449**!
3R12521	GMC	416102
3R8555	GMC	**415683**
3R8556	GMC	**416364**!
3R8557	GMC	**415294**!
3R963	GMC	**416865**!
3S2214	CATER	**473234**!
3S2845	CATER	**417555**=
3SPC22A	NOVO	470059
3SPC22A	NOVO	**470380**!
3T1003	HU-WR	**415379**
3T1003	HU-WR	**415379**!
3T1004	HU-WR	**470625**!
3T1014	HU-WR	**415449**!
3T1015	HU-WR	**472636**!
3T1026	HU-WR	**471689**!
3T1549	HU-WR	**471765**!
3T1554	HU-WR	**415442**!
3T1554	HU-WR	55442
3T1555	HU-WR	**471652**
3T1572	HU-WR	**473244**
3T1641	HU-WR	7208S
3T1746	HU-WR	240319
3W5694	CATER	**416892**
3XE446	PARGN	**411253**!
3Y224	GWI	**415001**!
3Y393	CHRYS	**471141**!
3Y393	GWI	**471141**!
3Y393	IH	**471141**!
3Y393	WHITE	**471141**!
3Y569	GWI	**472409**!
4-1056	TW-CO	50631
4-1062	TW-CO	5M497
4-4055	IPS	473823
4-7198	FLXIB	**416865**!
4-7198	TW-CO	**416865**!
4-AL1327	MACK	240023
4-AL1328	MACK	**471571**
40-0003205	WHITE	485197H=
40-01642	TW-CO	**473444**
40-01643	TW-CO	**473238**!
400	UNIVE	**417357**
400	UNIVE	455192!
4000-1660	MERCE	1999
4000-1900	IVECO	229005
4000-1900	IVECO	229006
4000-1920	MERCE	**416156**
4000-1940	IVECO	231404
4000-1940	MERCE	231404
4000-3510	IVECO	717006
40000	C-R	**417357**
40000010	FI-AL	713081
40000040	FIAT	227040
40000050	FIAT	224025
40000050	YUGO	224025
400001	WAYNE	**417495**
40000100	FIAT	713027
4000015	GMC	**412920**!
40000170	FIAT	713055
40000220	IVECO	713118
40000230	FIAT	713077
40000240	FIAT	223275
40000240	FIAT	32X56X10!
40000260	FIAT	222860
40000260	FIAT	28X47X7!
40000280	IVECO	713130
40000300	FIAT	224220
40000320	FIAT	713051
400003205	HERCU	485197H=

! Industrial Size/Type * Minor Width Difference

= The U.S. customer service number is 877-4-TIMKEN. The Canadian customer service numbers are 800-565-4927 (English) and 800-565-0438 (French-Canadian).

Mfr. No.	Name	Zero Duplication or Recommended Industrial
400003239	*WHITE*	**416332**!
40000350	*FIAT*	713032
40000410	*IVECO*	713133
40000450	*FIAT*	226480
40000450	*FIAT*	713160
40000460	*FIAT*	226480
40000470	*FIAT*	223035
40000470	*YUGO*	223035
40000480	*IVECO*	713108
40000490	*FIAT*	713065
40000520	*IVECO*	713126
40000560	*IVECO*	713114
40000620	*FI-AL*	713085
40000620	*IVECO*	713139
40000690	*IVECO*	713112
40000720	*FI-AL*	713086
40000730	*FI-AL*	713083
40000740	*FI-AL*	713079
40000770	*FIAT*	223620
40000810	*FIAT*	223014
40000850	*IVECO*	713096
40000880	*FI-AL*	713080
40000950	*IVECO*	713109
40000LDS	*JN-MN*	**473214**!
40001	*C-R*	**417357**
40001	*C-R*	455192!
40001010	*IVECO*	713098
40001020	*IVECO*	713088
40001050	*IVECO*	713105
40001060	*IVECO*	713099
40001150	*MERCE*	222510
40001150	*MERCE*	25X35X7!
40001320	*FI-AL*	713082
40001440	*IVECO*	713100
40001460	*FIAT*	713028
40001570	*IVECO*	713120
4000160	*FIAT*	713060
40001650	*IVECO*	713110
40001720	*YUGO*	222510
40001720	*YUGO*	25X35X7!
40001790	*FIAT*	713102
40001790	*IVECO*	140X160X13!
40001790	*MERCE*	140X160X13!
40001860	*FIAT*	713048
40001880	*IVECO*	227540
40001880	*IVECO*	227550
40001880	*IVECO*	75X100X12!
40001910	*IVECO*	100X130X12!
40001910	*IVECO*	713090
40001930	*IVECO*	125X150X12!
40001930	*IVECO*	231250
40001930	*MERCE*	125X150X12!
40001930	*MERCE*	231250
40001LDS	*JN-MN*	**415379**
40001LDS	*JN-MN*	**415379**!
40002	*C-R*	**417357**
40002	*C-R*	455192!
40002050	*IVECO*	713137
40002120	*FIAT*	713041
40002130	*FIAT*	713047
40002180	*FIAT*	713037
40002310	*IVECO*	713093
40002440	*FI-AL*	713084
40002450	*IVECO*	713125
40002540	*AUTOB*	713021
40002600	*IVECO*	713144
40002690	*IVECO*	713121
40002741	*FIAT*	227409
40002810	*FI-AL*	713078
40002850	*IVECO*	713092
40002900	*FIAT*	1963
40002900	*YUGO*	1963
40003	*C-R*	**417357**
40003	*C-R*	455192!
40003	*JN-MN*	HU024A
40003-33	*TW-CO*	**471765**!
400030	*C-R*	800030
40003080	*FIAT*	713068
40003260	*IVECO*	713127
40003270	*FIAT*	713025
40003300	*FIAT*	713061
40003310	*FIAT*	713056
400034	*C-R*	800034
40003610	*AUTOB*	713020
4000370	*IVECO*	713122
40003710	*IVECO*	713124
40003990	*YUGO*	226480
40004	*C-R*	**417357**
400040	*C-R*	800040
40004000	*FIAT*	713072
40004030	*FIAT*	713030
40004110	*FIAT*	713049
40004170	*FIAT*	713058
40004190	*FIAT*	713071
40004200	*FIAT*	713033
40004210	*FIAT*	713052
40004230	*FIAT*	713026
40004240	*FIAT*	713039
40004250	*FIAT*	713042
40004270	*FIAT*	224025
40004270	*FIAT*	713159
40004280	*FIAT*	226480
40004280	*FIAT*	713161
40004280	*FIAT*	713162
40004290	*FIAT*	227040
40004310	*FIAT*	713075
40004320	*FIAT*	713043
40004330	*ALFAR*	713004
40004350	*FIAT*	713069
400044	*C-R*	800044
40004400	*FIAT*	713040
40004450	*AUTOB*	713022
40004460	*FIAT*	223035
40004620	*FIAT*	713067
40004630	*FIAT*	713066
40004670	*FIAT*	713029
4000467R91	*IH*	**416404**!
40004750	*FIAT*	713050
40004760	*FIAT*	713038
40004780	*FIAT*	713035
40004810	*AUTOB*	713019
40004840	*FIAT*	713036
40004870	*FIAT*	713053
40004880	*FIAT*	713062
400050	*C-R*	800050
400051	*C-R*	800051
4000527R91	*IH*	**417351**!
4000531R91	*IH*	**476470**!
4000531R91	*IH*	**476470**
400054	*C-R*	800054
400055	*C-R*	800055
400060	*C-R*	800060
400061	*C-R*	800061
400064	*C-R*	800064
400065	*C-R*	800065
400070	*C-R*	800070
400071	*C-R*	800071
400074	*C-R*	800074
400075	*C-R*	800075
400080	*C-R*	800080
400081	*C-R*	800081
400084	*C-R*	800084
400085	*C-R*	800085
40009	*DENCO*	**471766**!
40009	*JN-MN*	HU013A
40009	*SPG*	240009
40009S	*SPG*	**471466**
400100	*C-R*	800100
400101	*C-R*	800101
400104	*C-R*	800104
4001040	*IVECO*	713129
400105	*C-R*	800105
400120	*C-R*	800120
400121	*C-R*	800121
400124	*C-R*	800124
400125	*C-R*	800125
400130	*C-R*	800130
400134	*C-R*	800134
400140	*C-R*	800140
400141	*C-R*	800141
400144	*C-R*	800144
4001449	*ALLCH*	**472394**
40014490	*ALLCH*	**472394**
400145	*C-R*	800145
4001456	*ALLCH*	**472394**
4001459	*GWI*	**415295**
400160	*C-R*	800160
400161	*C-R*	800161
400164	*C-R*	800164
400165	*C-R*	800165
40018	*SPG*	**471264**
400180	*C-R*	800180
400181	*C-R*	800181
400184	*C-R*	800184
400185	*C-R*	800185
40019	*AMC*	6356
4001OS	*JN-MN*	**472636**!
4002	*C-R*	55524
400200	*C-R*	800200
400201	*C-R*	800201
400204	*C-R*	800204
400205	*C-R*	800205
40021	*C-R*	**416130**!
400216	*C-R*	**455655**!
400216M1	*C-R*	**455655**!
400220	*C-R*	800220
400221	*C-R*	800221
400224	*C-R*	800224
400224M1	*C-R*	**416706**!
400225	*C-R*	800225
400226	*C-R*	**475384**
400226M1	*C-R*	**475384**
400228	*C-R*	**416921**!
400228K	*CLARK*	**416921**!
400228M1	*C-R*	**416921**!
40023	*C-R*	**416130**!
40023	*GEM*	**480630**!
40023	*MACK*	**480630**!
400230	*C-R*	**416654**!
400230M1	*C-R*	**416654**!
400235	*JEFF*	**473231**
40024807	*TROS*	**416706**!
40024807C	*TROS*	**416706**
400250	*C-R*	800250
400251	*C-R*	800251
400254	*C-R*	800254
400255	*C-R*	800255
40025607.5	*TROS*	**416921**!
40025610	*TROS*	**416921**!
40026004	*TROS*	43086S
40026007.5	*TROS*	**416654**!
40026009.25	*TROS*	**416654**
40026010	*TROS*	**416654**
40027	*SPG*	**471554**
40028	*C-R*	**415254**
40028	*CLARK*	**416921**!
400280	*C-R*	800280
400281	*C-R*	800281
400284	*C-R*	800284
400285	*C-R*	800285
4003	*C-R*	**415995**!
4003	*CABOT*	**415995**!
4003	*FAIRB*	**415995**!
4003	*GR-DV*	**415995**!
4003	*GWI*	**415995**!
400300	*C-R*	800300
40030004	*TROS*	45013S
40030007	*TROS*	**415995**!
40030007.5	*TROS*	**415995**!
40030007C	*TROS*	**415995**!
40030007C	*TROS*	**415995**!
40030009.25	*TROS*	**415995**!
40030009.25	*TROS*	**415995**!
40030010	*TROS*	**415995**!
40030010	*TROS*	**415995**!
400301	*C-R*	800301
400304	*C-R*	800304
400305	*C-R*	800305
40030807.5	*TROS*	**416404**!
40030812	*TROS*	**416404**!
400320	*C-R*	800320
400321	*C-R*	800321
400324	*C-R*	800324
400325	*C-R*	800325
40034	*C-R*	**417158**!
40034M1	*C-R*	**416404**!
40035	*C-R*	370015A
400350	*C-R*	800350
400351	*C-R*	800351
400354	*C-R*	800354
400355	*C-R*	800355
40036	*C-R*	**416130**!*
40037	*GEM*	**471224**!
40038	*C-R*	**417433**
400380	*C-R*	800380
400381	*C-R*	800381
400384	*C-R*	800384
400385	*C-R*	800385
40039LDS	*JN-MN*	65X100X10*
4003CR	*F-R-H*	**415995**!
4003DBL	*GWI*	**415995**!
4003DBL	*GWI*	**415995**!
4003M1	*C-R*	**415995**!
4003T	*C-R*	**415995**!
40040	*C-R*	370015A
400400	*C-R*	800400
400401	*C-R*	800401
400404	*C-R*	800404
400405	*C-R*	800405
40041	*C-R*	**416130**!*
40041	*JN-MN*	HU066A
4004130	*EUCLD*	**417554**!
4004130	*GMC*	**417554**!
4004136	*GMC*	J1138
4004199	*GMC*	J1136
40042	*C-R*	**416130**!
40042LDS	*JN-MN*	**416271**!
40043	*C-R*	**416130**!
40043LDS	*JN-MN*	**473231**!
40044	*C-R*	**416130**!
4004496	*GMC*	**415303**!
40045	*C-R*	**416130**!
400450	*C-R*	800450
400451	*C-R*	800451
400454	*C-R*	800454
400455	*C-R*	800455
4004652+600392	*SPG*	600392
4004653	*CUMMI*	600394

! Industrial Size/Type * Minor Width Difference

NUMERICAL INTERCHANGE

Mfr. No.	Name	Zero Duplication or Recommended Industrial
400487	UNIVE	415187
400488	MICH	415187
40049	C-R	415036*
400499	UNIVE	415035!
4005	STEM	HU005A
400500	C-R	800500
400500	MICH	415035
400500	MICH	415035!
400500D	OLIVE	204007=
400501	C-R	800501
400504	C-R	800504
400505	C-R	800505
40051	C-R	415036
400512	UNIVE	417356!
400512	UNIVE	455188
400513	MICH	417356!
400513	MICH	455188
40052	C-R	415036
400525	MICH	417357
400525	MICH	455192!
40053	SPG	473213!
40053S	NATL	473213!
40055	SPG	43089S
400550	C-R	800550
400550	MICH	415036
400550	UNIVE	415036*
400551	C-R	800551
400554	C-R	800554
400555	C-R	800555
400575	MICH	415041
400575	UNIVE	415041*
40059	SPG	40059S
40060	GARLK	471442!
400600	C-R	800600
400600	MICH	417509
400600	UNIVE	417509
400601	C-R	800601
400604	C-R	800604
400605	C-R	800605
40061S	SPG	6241S
400625	MICH	417223
4006253	EUCLD	417017=
4006253	GMC	417017=
4006255	EUCLD	417607
4006255	GMC	417607
4006256	GMC	JV1808=
4006257	EUCLD	417115
4006257	GMC	417115
4006258	GMC	JV1759=
4006259	EUCLD	417016
4006259	GMC	417114=
4006260	GMC	JV1760=
4006261	GMC	417018=
4006263	EUCLD	416951
4006263	GMC	416951
4006264	GMC	JV1850=
40063	SPG	7886S
40064	SPG	471821!
40064S	NATL	471821!
400650	C-R	800650
400651	C-R	800651
400654	C-R	800654
400655	C-R	800655
400659	C-R	710045
400667	RACIN	450188
40067	TROS	40067S=
4006B	JN-MN	416476!
4007	STEM	HU007A
40070	SPG	472185!
400700	C-R	800700
400701	C-R	800701
400704	C-R	800704
400705	C-R	800705
40071	SPG	40071S
40072	C-R	415036
40072	GARLK	471526!
40075	MASTE	340413
40075	TROS	450073
400750	C-R	800750
400751	C-R	800751
4007535	GMC	JV1127=
400754	C-R	800754
400755	C-R	800755
40077	C-R	417507
40078	C-R	417507
4007B	JN-MN	418028
4007B	JN-MN	455137!
4007B391	WGEAR	450536
4007B391	WGEAR	471535!
40080	C-R	417507
40080	C-R	417507!
400800	C-R	800800
400801	C-R	800801
400804	C-R	800804
4008049	ALLCH	J1929
400805	C-R	800805
40081	GARLK	471472!
40082	C-R	417507
40082	C-R	417507!
40084	AMC	450040
40084	C-R	417507
40084	C-R	417507!
400842R91	IH	410737!
40085	C-R	417507
40085	SPG	40085S
400850	C-R	800850
400851	C-R	800851
400854	C-R	800854
400855	C-R	800855
400855C91	IH	370007A
40086	C-R	417507
40088	C-R	417507
40089	C-R	417507=
4008999	GWI	472439
4008BX	SPG	1012
4008BX	SPG	1012N
4008BX	SPG	45X62X8!
400900	C-R	800900
400901	C-R	800901
400904	C-R	800904
400905	C-R	800905
40091	C-R	370065A
40091	C-R	370349A
40091	C-R	380036A
40092	C-R	415041
400927	CONTI	417191
400927	CONTI	455165!
400929	WAYNE	473467!
40094	SPG	40094S
400950	C-R	800950
400951	C-R	800951
400954	C-R	800954
400955	C-R	800955
400966D	OLIVE	254270
40097	SPG	40097S
40098	TROS	473464!
40098	TROS	473464
400A228	C-R	416921!*
400A3	C-R	415995!
400AM3	C-R	415995!
400AMM3	C-R	415995!
400B224	C-R	416706*
400B228	C-R	416921!*
400B3	C-R	415995
400B3	C-R	415995!
400BM228	C-R	416921!*
400BM3	C-R	415995
400BM3	C-R	415995!
400C3	C-R	415995
400C3	C-R	415995!
400C3	GWI	415995!
400C3	GWI	415995!
400CMM3	C-R	415995
400CMM3	C-R	415995!
400D550	CONE	5170
400F224	C-R	416706!
400F3	C-R	415995!
400FF3	C-R	45013S
400G228	C-R	43086S
400G3	C-R	45013S
400HD3	C-R	45013S
400M3-L	C-R	415995!
400N230	C-R	416654
400W22-M1	C-R	416921!
400W226	C-R	475384*
400W228	C-R	416921!
400W230	C-R	416654!
400W230-M1	C-R	416654!
400W230-T8	C-R	416654!
400W3	C-R	415995!
400W3-M1	C-R	415995!
400W500	CONE	5526
401000	C-R	801000
40100050	IVECO	713104
401001	C-R	801001
40100110	IVECO	713091
40100140	IVECO	713128
40100350	FIAT	713046
401004	C-R	801004
40100460	IVECO	713089
40100480	IVECO	713135
401005	C-R	801005
40100670	IVECO	713111
40100790	IVECO	713116
40101	C-R	415041
40101	SPG	40101S
40101340	IVECO	713095
40101620	IVECO	713142
40101730	IVECO	713113
401024	GMC	5109
401026	GMC	5123
40103	TROS	6064
4010470	IVECO	713141
4010490	IVECO	713138
40107	IRON	471270!
4010784	GWI	417501
40108	C-R	415041
40108	IRON	474254
40108	SPICE	3543
40108-1	SPICE	3543
40108-2	SPICE	3543
40109	SPICE	330385
40109-3	SPICE	340835
4010900	FIAT	222860
4010900	FIAT	28X47X7!
40110	C-R	415041
401100	C-R	801100
401101	C-R	801101
4011035	WOOL	55301S
401104	C-R	801104
401105	C-R	801105
40111	C-R	415041
40115616	TROS	6127
40117	SPG	42421S
401179	ALLCH	472016
401180	ALLCH	417134
40119	SPG	240119
4011CG-13	IH	473228!
40120	C-R	415041*
40120	NATL	471224
401200	C-R	801200
401201	C-R	801201
401204	C-R	801204
401205	C-R	801205
401218C91	IH	472015!
401218C92	IH	472015
401219C91	IH	415379
401219C92	IH	3893V!
401219C92	IH	415379!
40129	C-R	370036A
40129	C-R	370349A
40129	C-R	380036A
4012X	SPG	4012
40130	C-R	370036A>
40130	C-R	370349A%
40130	C-R	380036A
401300	C-R	801300
401301	C-R	801301
401304	C-R	801304
401305	C-R	801305
40132SA	SPG	412920
40133	AMC	473215!
40133	C-R	370036A>
40133	C-R	370349A%
40133	C-R	380036A>
40134	C-R	370036A>
40134	C-R	370349A%
40134	C-R	380036A>
4013493	WABCO	456799=
40135	C-R	370036A>
40135	C-R	370349A%
40135	C-R	380036A>
40136	C-R	370036A>
40136	C-R	370349A%
40136	C-R	380036A>
40136	OLIVE	415001!
40138	C-R	417509
40139	C-R	370036A>
40139	C-R	370349A%
40139	C-R	380023A
40139	C-R	380036A>
4014	STEM	HU014A
40140	C-R	417509
40140	SPG	471413
401400	C-R	801400
401401	C-R	801401
401402	C-R	801402
401404	C-R	801404
401405	C-R	801405
401406	C-R	801406
40141	C-R	417509
40141	NATL	470954
401418D	OLIVE	472560N
401418E	OLIVE	472560N
401418E	WHITE	472560N
401440D	OLIVE	6590S
401440E	MINNM	6590S
401440E	OLIVE	205009=
401450R91	IH	450096H=
401451R91	IH	450096H=
401452R91	IH	472185=
401453R91	IH	472185=
40146	C-R	370023A
40146	C-R	370036A
40146	C-R	370349A
40146	C-R	380036A
401468	CONTI	471442!
401469	CONTI	471538!

! Industrial Size/Type * Minor Width Difference > Hub Mount % Spindle Mount

= The U.S. customer service number is 877-4-TIMKEN. The Canadian customer service numbers are 800-565-4927 (English) and 800-565-0438 (French-Canadian).

Mfr. No.	Name	Zero Duplication or Recommended Industrial
40147	C-R	370036A
40147	C-R	380023A
401470	CONTI	**471267**!
401471	CONTI	**471652**
401472	ALLCH	**450173**
401472	CONTI	**450173**
401500	C-R	801500
401501	C-R	801501
401502	C-R	801502
401504	C-R	801504
401505	C-R	801505
401506	C-R	801506
40151	AMC	**450084**!
40154	SPG	40154S
4015601	EUCLD	**415035**
4015602	EUCLD	**416865**
40157	SPG	**471760**
40158	C-R	**417223**
40160	C-R	**417223**
40160	SPG	**471763**
401600	C-R	801600
401601	C-R	801601
401602	C-R	801602
401604	C-R	801604
401605	C-R	801605
401606	C-R	801606
40161	C-R	**417223**
40162	SPG	**471765**
40162C29	IH	**450084**!
40163	SPG	**471766**
40166	GMC	**416654**!
40166	TROS	224045
40166	TROS	40X62X12!
40169	SPG	40169S
401700	C-R	801700
401701	C-R	801701
401702	C-R	801702
401704	C-R	801704
401705	C-R	801705
401706	C-R	801706
40175	AMC	**473367**
40175	AMC	**473367**!
401774	WAYNE	**413247**!
401775	WAYNE	**416654**!
401783	JEFF	**415449**!
401800	C-R	801800
401801	C-R	801801
401802	C-R	801802
401804	C-R	801804
401805	C-R	801805
401806	C-R	801806
4018068	GMC	**415379**
4018069	GMC	**412473**!
4018377	GMC	**415227**!
40184	NATL	**471571**
401872R91	IH	295113=
4019	STEM	HU019A
401900	C-R	801900
401901	C-R	801901
401902	C-R	801902
401904	C-R	801904
401905	C-R	801905
401905R91	IH	**417509**
401906	C-R	801906
40191	SPICE	473814
40191	VIC	473814
401914R91	IH	**412943**
4019164	EUCLD	9555S
401918	GMC	9762S
401990	C-R	801990
401991	C-R	801991
401994	C-R	801994
401995	C-R	801995
401D2	WHITE	**417134**
401HH101	DANA	4624N
401HH101	DANA	4624V
401HH102	DANA	710008
401HH103	DANA	4624V
402000	C-R	802000
4020015	ALLCH	**416888**
402002	C-R	802002
402004	C-R	802004
402006	C-R	802006
40201	GARLK	**471466**!
40201	TROS	**414045**!
40202	CUSH	**471571**
40202C	CUSH	**471571**
40210	C-R	370023A
40210+77801	C-R	370023A
40213	GARLK	**471264**!
40217	SPG	**471647**
40218	AMC	**481864**
402200	C-R	802200
402202	C-R	802202
402204	C-R	802204
402206	C-R	802206
4022497	CUMMI	5741
40225	C-R	102X125X12
40225	GARLK	**471255**!
40230	SPG	**471689**
40236	ALLCH	**415196**!
40237	GARLK	**471564**
40244	SPG	**471787**
40245	C-R	102X130X13
4024561	ALLCH	**473239**
4024562	ALLCH	456641
402477	JEFF	**472397**!
40248	C-R	102X130X13!
402480	JEFF	**415035**!
402480	JEFF	**415035**
4024B	JN-MN	**415482**
402500	C-R	802500
402502	C-R	802502
402504	C-R	802504
402506	C-R	802506
402525	MICH	55193*=
402525	UNIVE	55193*=
402550	MICH	455037
402550	UNIVE	455037*
402575	MICH	455024
40259	GEM	**450593**!
40260	TROS	1012
40260	TROS	1012N
40263	TROS	**415437**
40267	MANT	**416229**
4026706	ALLCH	J1081
402726	ALLCH	**411253**!
402750	C-R	802750
402752	C-R	802752
402754	C-R	802754
402756	C-R	802756
40285	SPICE	6358
402856R91	IH	**416125**!
4028862	ALLCH	7568
4028922	ALLCH	7568
4028992	ALLCH	J1828=
4028OS	JN-MN	**415984**!
4029399	ALLCH	**417360**
4029502	ALLCH	**417360**
4029556	ALLCH	J1828=
402Y128	C-R	6127
403000	C-R	803000
403002	C-R	803002
403004	C-R	803004
403006	C-R	803006
40301	SPG	40301S
40301XAR	SPG	40301S
40301XXR	SPG	40301S
40302	TROS	450274
403066R91	IH	335924N
4030B	JN-MN	**471192**
4031	STEM	HU031A
40316	SPG	40316S
4032450	CHRYS	4250
403250	C-R	803250
403252	C-R	803252
403254	C-R	803254
403256	C-R	803256
403284	GMC	9762S
4033	EATON	**415988**
403307	GMC	9912
40330807	TROS	6754S=
4033261	ALLCH	**416865**!
40337	SPG	40337S
40350	C-R	455037
403500	C-R	803500
403502	C-R	803502
403504	C-R	803504
403506	C-R	803506
40351	SPG	43071S
4035756	EUCLD	**417608**
4035756	GWI	**417608**
4035RBR	SPG	712937
40360	C-R	6864S
40360	SPG	40360S!
4036046	ALLCH	**417360**
403689	WHITE	**473473**
40369	SPG	40369S
403692D	OLIVE	204002
4036RBR	SPG	722250
40370	SPG	40370S
403750	C-R	803750
403752	C-R	803752
403754	C-R	803754
403756	C-R	803756
40379300	FIAT	713073
4037B	JN-MN	**417541***
4037RBR	SPG	712625
40385S	NATL	**330385**!
40389	SPG	40389S
403899	GMC	8705S
4038RBR	SPG	712375
40395S	NATL	**472354**
40398	SPG	**471267**!
403VB7	MARI	**415035**!
403VB7	MARI	**415035**
404	UNIVE	**416891**!*
40400	GMC	**470088**
40400	NATL	42352S
40400	SPICE	8312
404000	C-R	804000
404002	C-R	804002
404004	C-R	804004
404006	C-R	804006
40402	NATL	42763
40402	WMG	42763
40403	DANA	710065
40403	SPICE	710065
404031	SPICE	710065
40408	ALLCH	**470530**!
4040H20	JA-MI	**416288**!
4040H20	JAE	**416288**!
40410	SPG	40410S
404116	GMC	8705S
40416	NATL	351487
40420	ALLCH	**415001**!
40427	GARLK	**470954**!
404294	GMC	2043
40434Q6	C-R	6754S=
40435	SPG	240435
40438	SPG	40438S
4043977	ALLCH	**415035**!
4043977	ALLCH	**415035**
40439770	ALLCH	**415035**
40439770	ALLCH	**415035**!
4044	STEM	HU044A
40440	VIC	5MR1300
40446	GARLK	**471554**!
404489R91	IH	**415025**
404499	UNIVE	**455134**!*
404500	C-R	804500
404502	C-R	804502
404503	C-R	804503
404504	C-R	804504
404506	C-R	804506
404525	MICH	**415142***
404525	UNIVE	**415142***
404550	MICH	**417512**
404550	UNIVE	**417512***
404575	MICH	**415043**
404575	UNIVE	**415043***
40458	GARLK	**471567**!
4045D	SHEP	**411253**!
404600	MICH	455203
404600	UNIVE	455203
404625	MICH	455056
404625	UNIVE	455056*
40463-4-1X	SPICE	39930
40463-6-1X	SPICE	39920
404631	SPICE	330749V
40488	GARLK	**471643**!
4048B	JN-MN	**416666**
4049266	CHRYS	5650
40492SA	TRSCM	345035
40492SA	TRSCM	**415035**
40492SA	TRSCM	475845!
40494	SPG	40494S
404941	O-M	**471737**
40494TA	TRSCM	**415035**!
404VB7	MARI	**415036**
405000	C-R	805000
405002	C-R	805002
405003	C-R	805003
405004	C-R	805004
4050229	ALLCH	**470088**
4050298	ALLCH	**410694**!
4050B	JN-MN	**473225**!*
4050D	GOODM	**416865**!
4050LPD	JN-MN	**473225**!
4051	NATL	5697
405103	C-R	805103
40519	SPG	442380
4051B	JN-MN	**415090***
40520	SPG	40520S
405203	C-R	805203
405225	H-S	43086S
4052468	FIAT	224220
4052468	FIAT	42X56X7!
4052468	FIAT	494117
4052SA	TRSCM	455192!
405285	JEFF	**417600**
405297	JEFF	**472492**!
4052D	GOODM	**417541**
40530	C-R	55193*=
405303	C-R	805303
405366C91	IH	**417487**
405366C91	IH	**417487**!
405367C91	IH	**417484**!

! Industrial Size/Type * Minor Width Difference

= The U.S. customer service number is 877-4-TIMKEN. The Canadian customer service numbers are 800-565-4927 (English) and 800-565-0438 (French-Canadian).

Mfr. No.	Name	Zero Duplication or Recommended Industrial
405368C91	*IH*	**415960**
4053B	*JN-MN*	**417344**!
40540	*C-R*	55193*=
405403	*C-R*	805403
4054B	*JN-MN*	**417181**!*
405500	*C-R*	805500
405502	*C-R*	805502
405503	*C-R*	805503
405504	*C-R*	805504
4055358	*FIAT*	1077=
4055358	*FIAT*	223535
40554	*SPICE*	4244
40555S	*NATL*	40555
40556	*SPG*	**471821**!
40558S	*SPG*	240435
40560	*TROS*	1163=
405603	*C-R*	805603
40564SA	*TRSCM*	**417507**!
40566	*NATL*	40566S
40566	*TROS*	40566S
40566	*WMG*	40566S
405661	*ALLCH*	**416706**
40568	*SPG*	40568S
40570	*SPICE*	710204
4057006	*CHRYS*	3173
4057006	*CHRYS*	710928
405703	*C-R*	805703
40576	*SPG*	40576S
4057B4	*WGEAR*	**471651**
4057B5	*WGEAR*	**416664**!
405803	*C-R*	805803
4058047	*CHRYS*	2506
40590	*C-R*	455037
405903	*C-R*	805903
405VB7	*MARI*	**416891**!
40600	*CASE*	**473214**
406000	*C-R*	806000
406002	*C-R*	806002
406003	*C-R*	806003
406003	*US-EL*	**481537**
406004	*C-R*	806004
40601	*CASE*	**417486**
40602	*CASE*	**471795**
40603	*CASE*	**473228**
40604DM	*IH*	**417196**!
40607	*CASE*	**471795**
406078	*GMC*	9912
406085	*BUC-E*	**412871**!
406089	*GMC*	8940S
40610	*CASE*	**415991**
40610	*CASE*	**415991**!
406103	*C-R*	806103
40613	*CASE*	**471466**!
40614	*CASE*	**471689**!
40615	*CASE*	**471424**!
40616	*CASE*	**472299**
40619	*CASE*	**470898**
4061919	*ALLCH*	**472164**!
406203	*C-R*	806203
40622	*CASE*	**455151**
40627	*SPG*	40627S=
406279	*CATER*	**471689**!
406295R2	*IH*	JV1673=
40629S	*SPG*	**481537**
406303	*C-R*	806303
40633	*AMC*	**471141**
40633	*CASE*	**471141**
40634	*CASE*	**471835**!
40635	*CASE*	**415498**
40635	*HYST*	**415498**
40635	*VIC*	9613S
40637	*CASE*	**470954**!
40638	*CASE*	**473229**
40639	*CASE*	**473228**
40640	*CASE*	**417344**!
406403	*C-R*	806403
40641	*CASE*	**416865**!
40642	*CASE*	**471224**!
40646	*CASE*	200110
406464	*CATER*	473196=
406500	*C-R*	806500
406503	*C-R*	806503
406525	*MICH*	**455194***
406525	*UNIVE*	**455194***
406550	*MICH*	417513
406550	*UNIVE*	417513*
406575	*MICH*	**417514**
406575	*UNIVE*	**417514***
40658	*CASE*	43089S
40659	*CASE*	**472439**
4065B	*JN-MN*	**455121***
406600	*MICH*	455024
406600	*UNIVE*	417515
406625	*MICH*	417516
406625	*UNIVE*	417516
406651R91	*IH*	**470625**!
406660	*US-EL*	**471466**
406748	*GMC*	225230
406748	*GMC*	52X72X8!
406752	*GMC*	224520
406752	*GMC*	45X60X10!
40678	*GARLK*	**471267**!
406812A	*HARWA*	40X68X12
40684	*SPICE*	8314
40684-1	*SPICE*	8314
40687	*GARLK*	**471570**!
406898	*EATON*	**416865**
4068B	*JN-MN*	**416892**!
406902R91	*IH*	**471341**!
406903	*C-R*	806903
40699A	*C-R*	6846S=
4069B	*JN-MN*	**471272**!
406VB7	*MARI*	**415045**!
406W550	*CONE*	5170
406W600	*CONE*	5537
407000	*C-R*	807000
407003	*C-R*	807003
40701	*TROS*	5419
407011	*BUC-E*	**474278**!
407039	*FALKC*	**415991**
407039	*FALKC*	455146!
407071	*BUC-E*	**450400**
40709	*SPICE*	4250
4070B	*JN-MN*	**418028**
4070B	*JN-MN*	455137!
40710	*SPICE*	710043
40712	*DANA*	722109
407135	*CATER*	**417211**!
407136	*CATER*	**415991**
407136	*CATER*	455146!
40715	*GARLK*	**471646**!
4071B	*JN-MN*	**473245**!
407207A	*HARWA*	40X72X7
407250	*C-R*	807250
407288	*BUC-E*	**412040**
40730	*GARLK*	**470590**
407407	*BUC-E*	**471341**!
4075	*STEM*	H075
407500	*C-R*	807500
407503	*C-R*	807503
407543	*ALLCH*	**472164**!
407544	*ALLCH*	40494S
4075HG	*SPG*	714075
40760	*TROS*	226020
40760	*TROS*	60X80X8!
407636700	*REINZ*	25598
40769	*SPG*	40769S
40771S	*NATL*	340771
40773	*SPICE*	470672
407760	*EATON*	370094A
407803	*C-R*	807803
407810	*EVERS*	204035
40782S	*SPG*	6815
40787	*SPG*	340787
40787S	*NATL*	340787
4078S	*SPG*	710650
40793	*SPICE*	5778
40793-2	*DANA*	5778
4079B	*JN-MN*	**471231**!
4079T2	*WHITE*	**417316**!
407VB7	*MARI*	**415058**
408	*UNIVE*	**416892**!
408000	*C-R*	808000
408003	*C-R*	808003
408010A	*HARWA*	40X80X10
4080B	*JN-MN*	**471646**!
408239	*ALLCH*	**470530**!
40825613	*TROS*	**417134**
40830009	*TROS*	**417351**!
40830409	*TROS*	55155=
40830809	*TROS*	**417621**!
40830811	*TROS*	5578
408342	*CATER*	**471760**
408450	*CATER*	**471224**!
408500	*C-R*	808500
408503	*C-R*	808503
408525	*MICH*	**472157**!
408525	*MICH*	**472157**
408525	*UNIVE*	416556!
408525	*UNIVE*	**472157**
408537	*GMC*	9912
408537	*UNIVE*	**415196**!*
408538	*MICH*	**415196**!
408550	*MICH*	**416891**!
408550	*UNIVE*	**416891**!*
408575	*MICH*	**415045**!
408575	*UNIVE*	**415045**!*
408600	*MICH*	**416137**
408600	*UNIVE*	**416137**
408605	*ALLCH*	200912=
408612	*UNIVE*	**417518**
40861A	*C-R*	8996S=
40861S	*TROS*	5976S
408625	*MICH*	**415058**
408638	*H-S*	**412027**
408662	*BUC-E*	**417349**
4086649	*CHRYS*	710005
4087B	*JN-MN*	**473016**!
40880D	*IH*	**415379**
408900	*RACIN*	**471224**!
4089297	*CHRYS*	710044
408A15204.5	*TROS*	6930
408VB7	*MARI*	**415351**!
409000	*C-R*	809000
409003	*C-R*	809003
409145	*WHITE*	415060
409145	*WHITE*	455060
40920	*TROS*	6098=
409208	*GMC*	9049
409208	*GMC*	9049N
40922	*TROS*	**472015**!
409235	*GMC*	5778
4093S	*SPG*	5452
409456	*BENDI*	340413
4094810	*CHRYS*	228480
4094829	*CHRYS*	474288
409500	*C-R*	809500
409503	*C-R*	809503
4095OS	*JN-MN*	**471737***
40965	*HYST*	**472157**!
40965	*HYST*	**472157**
4097	*STEM*	HU007A
409704	*WHITE*	**417488**!
40973	*SPG*	40973S
4097B	*JN-MN*	**417191**
4097B	*JN-MN*	455165!
4098B	*JN-MN*	**417525***
409910	*CATER*	**471567**!
409RC	*SUL*	**416892**!
409VB7	*MARI*	417536
40X50X8AN(35)	*ISP*	40X50X8
40X52X7SC	*TRSCM*	224010
40X52X7SC	*TRSCM*	40X52X7!
40X52X7TC	*TRSCM*	40X52X7!
40X54X55TB	*TRSCM*	**1213N**
40X54X6SC	*TRSCM*	40X54X6!
40X54X6TC	*TRSCM*	40X54X6!
40X55X6SC	*TRSCM*	40X55X6
40X55X6TC	*TRSCM*	40X55X6
40X55X7	*NATL*	224020
40X55X7	*NATL*	3392
40X55X7	*NATL*	40X55X8!
40X55X8SB	*TRSCM*	473677
40X55X8SC	*TRSCM*	40X55X8!
40X55X8TC	*TRSCM*	40X55X8!
40X56X10SC	*TRSCM*	40X56X10
40X56X10TC	*TRSCM*	40X56X10
40X56X7ASN	*ISP*	40X56X7
40X57X10SC	*TRSCM*	40X57X10
40X57X10TC	*TRSCM*	40X57X10
40X58X10	*NATL*	2000
40X58X10	*NATL*	224235
40X58X10	*NATL*	42X58X7!
40X58X10SC	*TRSCM*	40X58X10!
40X58X10TC	*TRSCM*	40X58X10!
40X58X8AN	*ISP*	40X58X8
40X60X10SC	*TRSCM*	40X60X10!
40X60X10TC	*TRSCM*	40X60X10!
40X60X9	*ISP*	44X60X7
40X62X11	*NATL*	224045
40X62X12SC	*TRSCM*	40X62X12
40X62X12TC	*TRSCM*	40X62X12
40X62X7AN(35)	*ISP*	40X62X7
40X65X10SC	*TRSCM*	40X65X10
40X65X10TC	*TRSCM*	40X65X10
40X68X12	*SIMRT*	40X68X12
40X68X12SC	*TRSCM*	40X68X12
40X68X12TC	*TRSCM*	40X68X12
40X68X8(35)	*ISP*	40X68X8
40X70X8SC	*TRSCM*	40X70X8
40X70X8TC	*TRSCM*	40X70X8
40X72X7	*FORSH*	40X72X7
40X72X7	*SIMRT*	40X72X7
40X72X7SC	*TRSCM*	40X72X7
40X72X7TC	*TRSCM*	40X72X7
40X75X8AS	*ISP*	40X75X8
40X78X10SC	*TRSCM*	40X78X10
40X78X10TC	*TRSCM*	40X78X10
40X78X8SC	*TRSCM*	40X78X8!
40X78X8TC	*TRSCM*	40X78X8!
40X80X10	*FORSH*	40X80X10
40X80X10	*SIMRT*	40X80X10
40X80X10SC	*TRSCM*	40X80X10
40X80X10TC	*TRSCM*	40X80X10
40X90X8AN(35)	*ISP*	40X90X8
410000	*C-R*	810000
410003	*C-R*	810003
410005	*SPG*	**471526**!

! Industrial Size/Type * Minor Width Difference

= The U.S. customer service number is 877-4-TIMKEN. The Canadian customer service numbers are 800-565-4927 (English) and 800-565-0438 (French-Canadian).

Mfr. No.	Name	Zero Duplication or Recommended Industrial
410027	NATL	471554!
41004	GARLK	471224!
41004	TROS	330385!
410040	SPG	450040
410049	NATL	471750!
410055	SPG	473215!
410059	NATL	470059
410060V	C-R	452222
410066	NATL	473367
410066	SPG	473367
410067	SPG	473228!
410069	SPG	473232!
410070	SPG	472185!
410071	NATL	472439
410076	NATL	470334!
41008	TROS	1110
410082	SPG	473238!
410083	NATL	472924!
410083	WMG	472924!
410095	SPG	473464
410099	NATL	411253!
4100B	JN-MN	415142*
410101	NATL	412119!
410101SS0	SPG	412119
410102	NATL	410102
410115	SPG	473467
410119	NATL	471442
410120	NATL	471224!
41013	SPG	41013S
410132	NATL	412920!
410136	NATL	470625!
410141	NATL	470954
410153	SPG	472287!
410154	NATL	473234!
410160	SPG	471763
410163	NATL	471766
410165	SPG	471801!
410169	SPG	473214!
410183	SPG	472179
410194	SPG	473010!
410194VGR	SPG	473010
4101BG	SPG	5109
41020	GARLK	471649!
410219	SPG	471649!
410230	NATL	471689!
410236	SPG	470712!
410241	SPG	471785!
410244	SPG	471787!
410261	SPG	473466
410265	SPG	473235!
41028	GARLK	471689!
410298	WMG	473239!
4103-5000-545227	MACK	717005
410301	SPG	472397!
410303	SPG	472015!
410308	NATL	410308
410308	NATL	473468
410309	SPG	471391!
410310	SPG	473242
410312	SPG	472016!
410312L	C-R	415442
410312L	C-R	55442
410312N	WMG	472016
410314	SPG	473243
410322	SPG	412040
410330	SPG	470605!
41035	SPICE	455194
410350	SPG	413247!
41035000470837	MACK	120X140X13!
41035000470837	MACK	717004
410352	NATL	472164!
410358	NATL	473231!
410359	SPG	473448
410360	SPG	471870!
410365	SPG	470898
410389	SPG	472492!
410394	SPG	473227!
4103B	JN-MN	455584
410410	NATL	471424!
410424	SPG	471730
410433	NATL	471138!
410438	SPG	472299
410441	NATL	471341!
41048	GARLK	471733
410496	NATL	410496
4104B	JN-MN	481163!*
410500	C-R	810500
410520X54	SPG	471272
410522	SPG	472258!
410530	SPG	470530!
410537	NATL	5711
410537SSR	SPG	5711
410538	CHRYS	3655
4105389	CHRYS	3655
4105395	CHRYS	3655
4105396	CHRYS	4040N
4105397	CHRYS	713655
410543	SPG	474272
410550	MICH	455197N
410550	UNIVE	455197N*
410552	NATL	470565!
410553	NATL	471224
410554S	NATL	40154S
410565	SPG	470565!
410574	SPG	413246
410575	MICH	417520
410575	UNIVE	417520*
410600	MICH	416144
410600	UNIVE	416144
410603	C-R	810603
410605	SPG	470605!
410614	SPG	472636!
410625	MICH	417238
410680	SPG	471570!
410694	NATL	410694
410719	SPG	471984
410737	NATL	410737!
41075	SPG	41075S
410755	SPG	473230!
41079	HYST	470954!
410791VGR	SPG	471466
4107B	JN-MN	416921!
4108542	FIAT	2000
4108542	FIAT	224235
4108542	FIAT	42X58X7!
410855	TW-CO	470625!
410857	TW-CO	40468
410867	SPG	470898
410895	SPG	471554!
410987	NATL	410987
410987	NATL	450686
410989	NATL	470989
410989SSR	BRWNG	470989
4109B	JN-MN	417349
410AM3	C-R	417351!
410VB7	MARI	415066
411000	C-R	811000
411003	C-R	811003
411035	WOOL	415072
4110CAR	SPG	5123
411100	SPG	471652
4111035	WOOL	415447
4111171	FIAT	2000
4111171	FIAT	224235
4111171	FIAT	42X58X7!
41113	GARLK	471652
411138	SPG	471138!
41117	GARLK	471692!
4111S	SPG	711200
4112001	CHRYS	9316
411234N	SPG	473473
411245	NATL	411245
411246	NATL	471737
41125	C-R	455134!
411251	TW-CO	412119
411252	TW-CO	473231!
411253	NATL	411253
41126	C-R	455134*=
41126702CA	RELEE	415559
411271	SPG	471271!
411272	SPG	471272!
411275	WMG	476470!
411275	WMG	476470
411275R	PAARS	476470!
41128	GARLK	470712!
4112S	SPG	711000
41130	C-R	455134!
41130SA	SPG	441130
411324	SPG	471255!
411330N	NATL	411330
411330SSR	SPG	411330!
411336	WHITE	472164!
411336A	WHITE	472164!
411337	NATL	471337
411376	NATL	411376=
41138	GARLK	471763
411394	NATL	411394
4113B	JN-MN	471762!
4113S	SPG	710800
411414	SPG	412473!
4114S	SPG	710925
41150	C-R	455134!
411500	C-R	811500
411501315	VW	1969
411501315	VW	48X63X9!
411509RA	SPG	411509N*
41151	C-R	455134!
41152	C-R	5526
41155	C-R	455134!
41156	C-R	455134!
411627-02-BD	RELEE	471272!
411627-02-BH	RELEE	471138!
411627-02-CA	RELEE	415559
411627-02-CF	RELEE	415138=
411627-02-CJ	RELEE	416865!
411627-02-DE	RELEE	473228!
41162702BJ	RELEE	415995!
41162702CE	RELEE	416888!
41162702CE	RELEE	475200
41162702CL	RELEE	416107!
41162702CL	RELEE	475638
41162702CR	RELEE	416664!
41162702CX	RELEE	470898
4116366	CHRYS	5131
4116366AB	CHRYS	5131
411656	SPG	471643!
411659	SPG	471646!
4116806	FIAT	226480
411698	SPG	471684!
41170	C-R	417511*
411706	SPG	471692!
411708	SPG	473203
41180	C-R	417511
41185	C-R	415142*
4118B	JN-MN	417603!
41190D	IH	471224!
411944	NATL	472924
411949	SPG	473204
41195	C-R	415142*
41195YA	AVCO	240470
41198	C-R	415142*
411A30805	TROS	8976S
411EM38	C-R	455566
411VB7	MARI	416167!
412	UNIVE	417247!
412000	C-R	812000
412003	C-R	812003
412018	SPG	472018
412020	SPG	472020
412028SSR	SPG	412028
412065	WHITE	410694!
412066	WHITE	416921!
412119	NATL	412119
412178	CATER	471652
412179	CATER	472258!
412180	CATER	471612
412181	CATER	472649
412187	CATER	472164!
41220	SPICE	473227
41220	VIC	473227!
412217	SPG	410059
412217	SPG	470380!
412230	C-R	417486
412230M1	C-R	417486
41224	GARLK	471413!
41224S	WMG	471224
41228	C-R	417134
4122B	JN-MN	415085!
4122B	JN-MN	456648
4123	C-R	417351!
4123	MINMA	417351!
412310	C-R	455500*
41232	C-R	55155=
41232	GARLK	471737
41234	C-R	417621!
41234M1	C-R	417621!
41238	C-R	455566
41238M1	C-R	455566
4123M1	C-R	417351!
41240	C-R	415142*
41240	TROS	6077
41241	TROS	455536
41246	GARLK	471766!
412473	NATL	412473
412500	C-R	812500
41255	C-R	415142*
412550	MICH	415196!
412550	UNIVE	415196!*
41257	NATL	3677
412575	MICH	415047
412575	UNIVE	415047*
412600	MICH	416149
412600	UNIVE	416149
41262	GARLK	471795
412625	MICH	415060
412625	MICH	455060
41263	IH	415551
412636	SPG	472636!
41264	IH	417254
41265	C-R	417512*
412669C91	IH	415483
4126893	CHRYS	3677
412699C91	IH	415483
41270	C-R	417512
41271	C-R	417512
4127B	JN-MN	417073
4127RA	SPG	4127
4128	SKIL	471554

! Industrial Size/Type * Minor Width Difference

= The U.S. customer service number is 877-4-TIMKEN. The Canadian customer service numbers are 800-565-4927 (English) and 800-565-0438 (French-Canadian).

Mfr. No.	Name	Zero Duplication or Recommended Industrial
41281S	NATL	471281!
41286	C-R	415043
41287	C-R	415043*
412871	NATL	412871
4128B	JN-MN	413469!*
412920	NATL	412920=
412A34	C-R	417621!
412B34	C-R	5578
412BM34-T8	C-R	5578
412F3	C-R	417351!
412G316	C-R	45525S
412HD316	C-R	45525S
412K1	WHITE	450400
412RC	SUL	471567!
412VB7	MARI	417357
412VB7	MARI	455192!
412W126-L	C-R	6930*
412W228	C-R	417134
412W228M1	C-R	417134
412W230	C-R	417486
412W230-M1	C-R	417486*
412W3	C-R	417351!
412W3-M1	C-R	417351!
412W310	C-R	455500
412W312	C-R	415442
412W312	C-R	55442
412W32	C-R	55155=
412W34	C-R	417621!
412W34-M1	C-R	417621!
413000	C-R	813000
413003	C-R	813003
41305	C-R	455203*
41306	C-R	455203
41308	AVCO	472311!
4130B	JN-MN	470334!
41315	MALL	350974!
4131CAR	SPG	4131
413244	SPG	473244!
413245	SPG	473245!
413246N	NATL	413246!
413247	NATL	413247=
413248	NATL	413248
413248	NATL	413248=
41325	C-R	455056
41328	C-R	55268
4133B	JN-MN	457874
413469	NATL	413469!
413470	NATL	413470=
41348	GARLK	472258!
41350	C-R	455203
413500	C-R	813500
413503	C-R	813503
41351	MALL	481644
413536	H-S	412119!
413539	H-S	470334!
413561	H-S	416664!
413577	H-S	473467
4136	TEKNI	471649!
41360	GARLK	471192
413619	WHITE	415351!
41368	GARLK	473214!
4137283	CHRYS	9316
4137314	CHRYS	710067
4137426	CHRYS	8835S
413752C91	IH	415027
413753C1	IH	415138!
413753C91	IH	415138!
4137744	CHRYS	473814
4137765	CHRYS	722108
4137766	CHRYS	4250
41378	GARLK	473215!
413799	SPG	1950
4138B	JN-MN	471532*
4139B	JN-MN	473471*
413VB7	MARI	415196!
413W126-L	C-R	6930*
414	UNIVE	417267
414000	C-R	814000
414003	C-R	814003
41401	C-R	231052
41403	CHRYS	473450!
414072	SPG	226285
414072	SPG	62X85X8!
414072SC	SPG	226285
41408924	NOK	110X150X12!
41408924	NOK	110X150X15
4140B	JN-MN	471413!*
41410	C-R	105X125X13
41413S	NATL	471413
41413S	SPG	471413
41425	C-R	105X130X12!
41425	C-R	231053
41426	C-R	105X130X12V!
41426	C-R	712004
414268	NATL	414268=
41430	C-R	105X130X12!
41432	OLIVE	415001!
41433	C-R	105X135X12
41436D	IH	417211!
4143D5	WHITE	416500
41440	C-R	105X135X12!
41443	C-R	105X135X12!*
414467-C91	IH	370037A
414467-C91	IH	370338A
414500	C-R	814500
414503	C-R	814503
41452	HYST	472016
41453	HYST	472409!
41454	GARLK	473227!
41454	HYST	415074
41455	C-R	105X140X12
41455	HYST	417172
41455	SPICE	5778V
41455-1	SPICE	5778V
414550	MICH	55199=
414550	UNIVE	55199*=
41456	C-R	105X140X12!
41456	HYST	473475
414575	MICH	417525
414575	UNIVE	417525*
414598	GMC	1187
414598	GMC	47X68X10!
41460	WAUKE	471785!
414600	MICH	417526
414600	UNIVE	417526
41460A	WAUKE	471785!
41462	GARLK	470625!
414625	MICH	415351!
4146908	FIAT	1174
4146908	FIAT	38X52X8.5!
4146912	FIAT	224220
4146912	FIAT	42X56X7!
4146912	FIAT	494117
4146916	FIAT	224040
4146916	FIAT	40X60X10!
414692	WHITE	412473!
41470	C-R	105X145X12
41472	GARLK	470380!
41475	C-R	105X160X15
41484	VICK	6465
414858	WHITE	472287!
4148B	JN-MN	411253!
4148BJO	SPG	4148
41492	GARLK	473228!
41494SA	TRSCM	455134!
414958	WHITE	472287!
41498	GARLK	473228!
4149B	JN-MN	471224!
414M228-L	C-R	417134
414VB7	MARI	416888!
414W228-M1	C-R	417134*
415000	C-R	815000
415001	NATL	415001
415003	C-R	815003
415006	NATL	417344!
415011	NATL	416921!
415012VGR	SPG	416654!
415018	SPG	476470!
415018	SPG	476470
415027	NATL	415027
415027HC9	SPG	415027
415029	SPG	416125!
415029BG	SPG	416125!
415034	NATL	415034
415034VA	SPG	415034V
415035	NATL	415035!
415040	SPG	416891!
415045	NATL	415045
415049	SPG	416892!
415053	NATL	415138!
415053	WMG	415138!
415062	SPG	415351!
415068	NATL	417269!
41507	ALLCH	415035!
41507	ALLCH	415035
415070	NATL	416865!
415073	SPG	416107!
415084	SPG	416239!
415084R	ROCKW	416239=
415085	NATL	456648
415086RA	SPG	417487
415088	NATL	415088
415094	SPG	416444
415095	NATL	416271!
4150N	WMG	710096
415104RA	SPG	415645!
415104RA	SPG	455104
415105	NATL	415938
415107	SPG	416666
415111BX	SPG	416229
415115	NATL	416077
415134N	SPG	455134
415138	NATL	415138=
415146N	WMG	415991
415146N	WMG	415991!
415149	SPG	417343!
415154	SPG	417351!
415156	SPG	417621!
415162	SPG	417181!
415164	SPG	412473!
415165	SPG	417191
415172	SPG	416332!
415177	SPG	415379
415192	SPG	417357
415195	SPG	416556!
415195	SPG	472157
415196	NATL	475196=
415198	SPG	416380!
4151R	SPG	710160
415200	NATL	416888!
415209	SPG	416154!
415213	SPG	417247!
415227	NATL	417756
4152319	FIAT	222860
4152319	FIAT	28X47X7!
415234	NATL	415234
415248	SPG	412861
415259	NATL	415259=
415265	SPG	456305
415269	SPG	417502
415270	SPG	417605
415271	SPG	415725!
415273	SPG	417254
415281	NATL	417349
415281N	WMG	417349!
415294	NATL	415294
415299	SPG	417600
4152A	WAYNE	472015!
415303	NATL	415303=
415315	SPG	415984!
415315RA	SPG	415984!
415319RR	SPG	417495
415322VGR	SPG	417484
415351	NATL	370020A
415351	NATL	415351
415354	NATL	416404!
415355	SPG	417158!
415363	SPG	417362!
415364	SPG	416664!
415368	SPG	415483
415377	SPG	417541
415379	NATL	415379=
415436SSR	SPG	415436
415437	NATL	415437
415437	NATL	475437=
415442	NATL	55442
415449	NATL	415449!
415458	NATL	415458=
415469	WHITE	415458!
415479RA	SPG	417350!
415483	NATL	415483
415489	NATL	417603!
41550	C-R	9128S
415500	C-R	815500
415503	C-R	815503
41555	C-R	2064
415551VGR	SPG	415551
41560	TROS	473463
41561S	TROS	473435
415627SSR	SPG	415627
415645	NATL	455104
41566	GARLK	473230!
415697	NATL	415697=
415697	NATL	455547
41572S	NATL	43076S
41576	GARLK	473231!
41579	SPICE	474278
415857	NATL	415857
415861C91	IH	412473
4159	WAYNE	476838!
41590	GARLK	473010!
415915C91	IH	712625
415937	NATL	415937=
415953	NATL	415035!
415958	NATL	415958
415960	NATL	415960!
415972	SPG	415988
41598	GARLK	473232!
415983N	NATL	415983
415983SSR	SPG	415983
415983SSR	SPG	415983N!
415983VGR	SPG	415983V
415983VGR	SPG	713750
415984	NATL	415984=
415991	NATL	415146!
415991	NATL	415991
415991	NATL	455146
415991	SPG	415991

! Industrial Size/Type * Minor Width Difference

= The U.S. customer service number is 877-4-TIMKEN. The Canadian customer service numbers are 800-565-4927 (English) and 800-565-0438 (French-Canadian).

Mfr. No.	Name	Zero Duplication or Recommended Industrial
415991	*SPG*	**415991**!
415991SSR	*SPG*	**415991**
415991VGR	*SPG*	**415991**
415995	*NATL*	**415995**!
415995V	*NATL*	**415995**!
4159A	*WAYNE*	**476838**!
4159B	*JN-MN*	**481163**!*
415VB7	*MARI*	**416154**!
416000	*C-R*	816000
416003	*C-R*	816003
416011	*NATL*	**417621**
416011HAR	*WMG*	5509
416029N	*NATL*	416029
416029SSR	*SPG*	416029
416029SSR	*SPG*	416029N!
41605	*VIC*	5M406=
416055	*SPG*	**415683**
416107	*NATL*	455073
416107	*NATL*	475638
416135	*NATL*	476135=
416153	*NATL*	**416153**
416154	*NATL*	**416154**
416167	*NATL*	**416167**
416176	*SPG*	**417544**
416190	*SPG*	**417361**
4161B	*JN-MN*	**416339**
4161B	*JN-MN*	455031!
4162	*O-M*	**471442**!
416219	*SPG*	**417365**
41623208	*TROS*	355732
416239	*NATL*	**416239**=
416239	*NATL*	**416239**
41624810	*TROS*	**416282**
41624812	*TROS*	**416282**
41625207.5	*TROS*	**411348**!
416270SSR	*SPG*	**416270**
416273	*NATL*	**416273**
416273	*NATL*	**416273**=
416285SSR	*SPG*	**416285**
416289	*SPG*	**417171**!
416294	*NATL*	**416294**=
416294V	*SPG*	**416294**
4162B	*JN-MN*	**472924**!
41630007.5	*TROS*	**417487**
41630010	*TROS*	**417487**
41630810	*TROS*	**416288**
41631210	*TROS*	**456105**
41631606	*TROS*	**476470**
41631607.5	*TROS*	**476470**
41631610	*TROS*	**476470**
41632010	*TROS*	**416292**
416332	*NATL*	**416332**
416339	*NATL*	**416339**=
416339	*NATL*	455031
416345	*NATL*	**416345**=
416345	*NATL*	455033
416362	*SPG*	416362
416364	*NATL*	**416364**=
416370	*NATL*	**416370**=
416370SSR	*SPG*	**416370**!
416380	*NATL*	**415196**
4163B	*JN-MN*	**415725**!*
416403	*SPG*	**417602**!
416404	*NATL*	**416404**=
416414	*NATL*	**415991**
416414	*NATL*	**415991**!
416414	*SPG*	**415991**!
416414	*SPG*	**415991**
41647	*SPICE*	2146
416476	*NATL*	**416476**
416500	*C-R*	816500
416500RAR	*SPG*	**416500**
416500SSR	*SPG*	**416500**!
416503	*C-R*	816503
416550	*MICH*	**416888**!
416550	*UNIVE*	**416888**!
416563	*MICH*	**416153**!
416575	*MICH*	**416892**!
416575	*UNIVE*	**416892**!*
416600	*MICH*	**416154**!
416600	*UNIVE*	**416154**!
416624	*NATL*	**416624**=
416625	*MICH*	**415351**!
416638C91	*IH*	710021
416654	*NATL*	**416654**
416664	*NATL*	**416664**
416706	*NATL*	**416706**
416738	*NATL*	450096
41675F	*VIC*	5M406=
4167735	*CHRYS*	**472572**
4167917	*CHRYS*	**482163**!
4167929	*CHRYS*	3173
4167929	*CHRYS*	710928
4167930	*CHRYS*	**472572**
41682	*VIC*	5M445
416865	*NATL*	**416865**
416888	*NATL*	355200
416888	*NATL*	**416888**
416892	*NATL*	**416892**=
4168B	*JN-MN*	**327303**!
4168LUP	*JN-MN*	**327303**!
4169	*SKIL*	240119
41690	*GARLK*	**473237**!
416919N	*NATL*	**416919**
416919SSR	*SPG*	**416919**!
416919SSR	*SPG*	**416919**
416921	*NATL*	**416921**=
41698	*VIC*	722109
416VB7	*MARI*	417267
417000	*C-R*	817000
417003	*C-R*	817003
41704	*GARLK*	**472164**!
4170B	*JN-MN*	**417196**!*
41714	*GARLK*	**472185**!
417158	*NATL*	**417158**!
417158	*NATL*	9864S
417159VGR	*SPG*	**417159**=
417171	*NATL*	**417171**=
417181	*NATL*	**417181**=
417191	*NATL*	**417191**!
417191	*NATL*	455165
417191	*NATL*	456585!
417196	*NATL*	**417196**=
417205	*NATL*	**417205**=
417210	*NATL*	486985=
41726	*GARLK*	**472179**
417262	*NATL*	**417262**
417269	*NATL*	**417269**
417316	*NATL*	**417316**!
41733	*HYST*	**416364**!
417344	*NATL*	**417344**=
417349	*NATL*	**417349**
417350	*NATL*	**417350**=
417351	*NATL*	**417351**=
417353	*NATL*	**417353**=
417354	*NATL*	**417354**=
417355	*NATL*	**417355**=
417355	*NATL*	485497
417356	*NATL*	**417356**
417356	*NATL*	**417356**=
417356	*NATL*	455188
417357	*NATL*	455192
417362	*NATL*	415363=
417366	*NATL*	**417366**=
41737	*HYST*	**415085**!
417374	*SPG*	**417606**
4173789	*CHRYS*	3459
41738	*HYST*	**413478**
417433	*NATL*	**417433**
4174631	*SPICE*	470328
4174631	*SPICE*	**481213**!
4174632	*SPICE*	**473231**
4174633	*SPICE*	**471529**
417480	*NATL*	**417480**
417483SSR	*SPG*	**415007**
417484N	*NATL*	**417484**!
417487	*NATL*	**417487**!
417488	*NATL*	**417488**
417489SSR	*SPG*	**415088**
41750	*C-R*	**415295**
417500	*C-R*	817500
417500VGR	*SPG*	417500V
417503	*C-R*	817503
417507	*NATL*	**417507**
41751	*C-R*	**415295**
417516VGR	*SPG*	417516V
417537	*CATER*	**470898**
417546	*NATL*	**417546**
417549	*NATL*	**417549**=
417554	*NATL*	**417554**=
417555	*NATL*	415487
417598VGR	*SPG*	**417598**
4175BX	*SPG*	4175
4175BXO	*SPG*	4175
417602	*NATL*	**417601**
417603	*NATL*	**417603**=
41761	*C-R*	**455194***
417621	*NATL*	**417621**
4177	*EATON*	**416239**!
41771	*C-R*	**455194***
41772	*C-R*	**455194***
41777	*SPICE*	710304
41778	*SPICE*	710095
4177B	*JN-MN*	**455019**!
4177CA	*SPG*	1993
41785S	*SPG*	**471785**!
4178B	*JN-MN*	**415001**!
4179496	*CHRYS*	4405V
4179497	*CHRYS*	5414
4179498	*CHRYS*	2146
417967	*NATL*	**417967**
417VB7	*MARI*	**473215**!
418000	*C-R*	818000
418003	*C-R*	818003
41802	*GARLK*	**472439**
418028	*NATL*	415137!
418028	*NATL*	**418028**
418028	*NATL*	455137
418029	*NATL*	**418029**
41804	*HYST*	**417349**
41809	*HYST*	**415302**
41812	*C-R*	417513
41813	*C-R*	417513
41814	*GARLK*	**472572**!
41818	*ALLCH*	**471766**!
41826	*GARLK*	**473238**!
41833	*C-R*	**417514**
41833C	*HYST*	**472394**
41838	*GARLK*	**473239**!
4183LPD	*JN-MN*	**416500**
41840S	*TROS*	**474278**!
41840S	*TROS*	6859S
418456	*TW-CO*	**415036**
41848	*GARLK*	**473240**!
4184B	*JN-MN*	**472070***
4185	*NATL*	5698
418500	*C-R*	818500
418503	*C-R*	818503
418553	*TW-CO*	5405
418575	*MICH*	**417533**
418575	*UNIVE*	**417533***
4185B	*JN-MN*	**415988***
418600	*MICH*	417534
418600	*UNIVE*	417534
4186220	*CHRYS*	3476
418625	*MICH*	457585
41862D	*IH*	**417351**!
41869	*GMC*	**415991**
41869	*GMC*	455146!
41874	*C-R*	417515
41875	*C-R*	417515
41876	*C-R*	417515
418772	*WHITE*	**450593**!
4187B	*JN-MN*	**471267**!
41888	*VIC*	**416888**!
41899	*C-R*	417516
418E-71	*IH*	**416153**!
418HA3-L	*C-R*	7338N
418VB7	*MARI*	**473225**!
41900	*C-R*	417516
419000	*C-R*	819000
419003	*C-R*	819003
419032C91	*IH*	**470954**
4191B	*JN-MN*	**472319***
4193LPD	*JN-MN*	**473439**!
4194B	*JN-MN*	**472924**!
41950	*C-R*	455625=
419500	*C-R*	819500
419503	*C-R*	819503
41962	*TROS*	7107A=
4197B	*JN-MN*	417780*
41999	*VIC*	**472636**!
419990	*C-R*	819990
4199B	*JN-MN*	473437
419VB7	*MARI*	**416154**!
41A62	*O-M*	**471442**!
41N1568	*WGEAR*	**471466**!
41SR-28	*MACK*	HU036A
41X10133A	*JOHND*	**473231**
41X10836A	*JOHND*	2081
41X50056D	*JOHND*	**471272**!
41X51990A	*JOHND*	200854
41X53X7TA	*TRSCM*	1950
41X55X7SC	*TRSCM*	41X55X7!
41X55X7TC	*TRSCM*	41X55X7!
41X56X7SC	*TRSCM*	41X56X7!
41X56X7TC	*TRSCM*	41X56X7!
420003	*C-R*	820003
4200156	*AMC*	25598
42002	*EATON*	370023A
42006	*GARLK*	**471424**!
4200669	*US-EL*	55386
4201	*CLARK*	**471818**
420140C91	*IH*	**474276**
42015	*IH*	**473426**
4201B	*JN-MN*	**416071**
42023	*GARLK*	**472492**!
42031	*C-R*	**456141**
42031	*TROS*	5246
42035	*GARLK*	**472924**!
42039S	*TROS*	5401
42041	*TROS*	5403
42042	*GARLK*	**417351**!
42043	*TROS*	5405
42043	*VIC*	5M81
42044	*TROS*	5406
42045	*TROS*	5408
42045	*VIC*	5M81

! Industrial Size/Type * Minor Width Difference

= The U.S. customer service number is 877-4-TIMKEN. The Canadian customer service numbers are 800-565-4927 (English) and 800-565-0438 (French-Canadian).

Mfr. No.	Name	Zero Duplication or Recommended Industrial
42046	SPICE	473212
42047	TROS	5410
42047	VIC	5M81
42049	VIC	5M293
42050	VIC	55367=
42053	TROS	5460
42055S	TROS	5462
42056	GARLK	472397!
42057	TROS	370002A
420575	UNIVE	415371*
42058S	TROS	417506
42060	TROS	370019A
420600	MICH	416158
420600	UNIVE	416158
42061S	TROS	370005A
420625	MICH	415064
420625	UNIVE	415064
42063	DANA	4131
42063S	TROS	5471
42064S	TROS	5472=
42065S	TROS	5473
42068S	TROS	5481
4206B	JN-MN	472164!
42070S	TROS	5589
42071	GARLK	473242
42071	TROS	5494
42072S	TROS	5495
42073	TROS	370003A
42075	TROS	5578
42076	US-EL	416664!
42079	TROS	7600S
42089	TROS	7886S
42093	TROS	472016
420953	CATER	470380!
420984C91	IH	100495
420984C91	IH	476023N
42099	TROS	5751
4209B	JN-MN	411245!
421	KRSE	411376!
4210	C-R	343101
421001C	EMSCO	416865!
421002C	EMSCO	415074
421003C	EMSCO	417298
42101	SPG	42101S
42103	SPICE	473452
42103	TROS	5759=
4210530	CHRYS	471271!
42106	TROS	5778
4210603	CHRYS	341022
4210952	CHRYS	722109
4210B	JN-MN	473224!
42116	TROS	450307
42117	TROS	470898
42120	C-R	710295
42121	TROS	472179
42122	TROS	473228
42125	VIC	5M289
42126	TROS	471224
421268	WHITE	6635S
42130	TROS	5865
42132	TROS	472258
42132S	TROS	472258
42134	TROS	455280
42140D	IH	415142
42143	TROS	473228
42146	TROS	200354
421462	CATER	6760S
42146S	TROS	204002
42148	TROS	455151
4214B	JN-MN	417546!*
42150	GMC	415991!
42150	GMC	415991
42150	US-EL	415302
42152	TROS	5951
42153S	TROS	5957S
42154	TROS	370036A
42154	TROS	370349A
42155	TROS	203034
42156	TROS	5971
42159	GARLK	473204
4215B	JN-MN	416921!
42165C	VIC	5M403
42166	TROS	415899N
42166	TROS	416624
42167	EATON	6754S=
42169	VIC	5M356
42171	GARLK	470898
421732C91	IH	442874
42176	TROS	413478
42177	TROS	6074
42177D	IH	473367!
42177D	IH	473367
42179	TROS	353141!
42179D	IH	455008
42181	TROS	6090S
42182D	IH	415034!
42183D	IH	471750!
42183DA	IH	471750!
42186	GARLK	472015!
42187	TROS	410708
42188	TROS	470954
42197	TROS	472924
42198	GARLK	472016!
42198	TROS	452222!
4219B	JN-MN	455406!
421W38	C-R	455566
422	KRSE	415449!
42201	TROS	6180=
42204	TROS	473214
42205D	VIC	5M403
42207	TROS	410987=
4220B	JN-MN	415458!
4220LPD	JN-MN	415458!
4220LUP	JN-MN	415458!
42210	GARLK	473243
42212	TROS	471271!
42214	TROS	6245S=
42215	MID-R	471466!
42215	SPECI	471344
42216	MID	471267!
42216	MID-R	471267!
4221A144	KOEH	415458!
4221B	JN-MN	415991
4221B	JN-MN	455146!
42220	TROS	6270
42221S	TROS	6283S
42225	TROS	6312
42226	TROS	6324S=
42229	TROS	6336S
422309	WOOL	455576!
42231S	TROS	472258
42233S	TROS	6357S
42237S	TROS	6370N
42238S	TROS	471526!
4224	SKIL	471647
42241S	TROS	6402S=
42243	TROS	471442!
42244	TROS	483054N
42248	TROS	472354!
42249	TROS	417267
42250	TROS	473228
42256	TROS	370002A
422575	UNIVE	415284*
42257S	TROS	473179
42258	MID	473227
42258	MID-R	473227
42259	TROS	6465
4225B	JN-MN	416292*
422600	MICH	417535
422600	UNIVE	417535
422625	MICH	417536
422625	UNIVE	417536
42263	TROS	455566
42266	TROS	471829
42268	TROS	6513
42270	TROS	410708
42272S	TROS	6532S=
42273	TROS	6547
422743C91	IH	471424!
422744C91	IH	473232!
42276	TROS	6532S=
42277	TROS	455134
42279	TROS	416888!
42280	AMC	473444
42280	TROS	6575S
42280S	NATL	7840S
42282	TROS	418028
42284	TROS	6590S
42284S	TROS	6590S
422857	WHITE	416654
42285S	TROS	6592S=
422878	ADAMS	416892!
422881	ADAMS	415027!
422881	ADAMS	415027
422881	LETN	415027
422881	LETN	415027!
422881	WABCO	415027
422881	WABCO	415027!
42288S	TROS	6597S
4228B	JN-MN	474276!
42290	TROS	6612S
422920	ADAMS	476838!
42295S	TROS	6635S
42296S	TROS	6638S
42298S	TROS	471570!
42299	TROS	471267!
422997	ADAMS	473215!
42300	TROS	6644
42301S	TROS	9613S
42302	TROS	6649
42303	GARLK	471272!
42303S	TROS	473234!
42304	TROS	6663S
42306	TROS	471413!
42308	TROS	470605!
4231012	EARTH	450398
4231012	EARTH	471267!
42311S	TROS	6703S
42312	TROS	470712
42313	TROS	205004
42315S	TROS	412473!
42316	TROS	416892
42317	GARLK	471138!
42317	TROS	6759S
42317S	TROS	6759S
42320S	TROS	417134
42322S	TROS	471466!
42323S	TROS	471264!
42324S	TROS	481443!
42325S	TROS	6808N
42328S	TROS	6832S
42329	GARLK	472636!
42329S	TROS	470954
4232B	JN-MN	472070*
42330	TROS	6840S
423314	C-R	418029!
423314M1	C-R	418029!
42331S	TROS	6846S=
42332R	DIA	470898!
42332S	TROS	6847S
42336S	TROS	410496!
42337S	TROS	417210!
42338S	TROS	6863S!
42340S	TROS	370005A
42341	GARLK	412920!
42341S	TROS	6872S
42342S	TROS	417254
42343S	TROS	473234!
4234493	WGEAR	417210!
42344R	TROS	470898!
42345	TROS	6886S
42346	TROS	6897=
42347S	TROS	6906S
42351	TROS	6922=
42352S	TROS	471141
42353R	TROS	473459
42354	TROS	370006A
42354S	TROS	7006S
42355S	TROS	7014S
42357S	TROS	473234!
42358S	TROS	410059
42358S	TROS	470380!
4235B	JN-MN	471567!*
42366	TROS	7376=
42367	TROS	7378
42368S	TROS	7381S
42369	VIC	5MR71
42369S	TROS	370005A
42372	GMC	417343!
42372S	TROS	471750
42373S	TROS	8370S
42375S	TROS	8059S
42376	MID	470590
42376	MID-R	470590
423843	ADAMS	472924!
423843	LETN	472924!
423843	LK-BT	472924!
423843	WABCO	472924!
42385	MWKEL	412920
42385	TROS	5313
4238570	CHRYS	4099
4238789	CHRYS	4249
4238B	JN-MN	415088
4238B	JN-MN	415088!
42395	C-R	472157
42395	C-R	472157!
42396	C-R	472157
42396	C-R	472157!
42396	TROS	5965
4239B	JN-MN	473447*
423F38	C-R	476470!
423F38	C-R	476470
423FF38	C-R	476470
423FM38	C-R	476470
423FM38	C-R	476470!
42400	VIC	5MR71
4240044	CHRYS	5414
4240101	CHRYS	5127
4240150	CHRYS	5650
42410	C-R	416556!
42410	C-R	472157
42411	C-R	472157!
42411	C-R	472157
42411S	TROS	6668S
42416	TROS	370004A
42418	C-R	416556!
42418	C-R	472157
42419	C-R	472157

! Industrial Size/Type * Minor Width Difference

= The U.S. customer service number is 877-4-TIMKEN. The Canadian customer service numbers are 800-565-4927 (English) and 800-565-0438 (French-Canadian).

Mfr. No.	Name	Zero Duplication or Recommended Industrial
42420	TROS	7131
42422	C-R	**472157**
42422	GARLK	**470565**!
42422410	TROS	455650=
42423S	TROS	7896S
42424	TROS	7131
42425	C-R	452157!
42426	C-R	**472157**
42426	C-R	**472157**!
42427	C-R	416556!
42427	C-R	**472157**
42427	SPICE	4525V
42427	VIC	4525V
42428	C-R	416556!
42428	C-R	**472157**
42429	C-R	416556!
42429	C-R	**472157**
4243	C-R	**417487**
42430	C-R	**472157**
42430	C-R	**472157**!
42430010	TROS	**417488**!
42430810	TROS	**417171**!
42431	C-R	416556!
42431	C-R	**472157**
42432408	TROS	**412473**!
42432410	TROS	**412473**!
42433	C-R	**472157***=
42433212	TROS	415899N
42433212	TROS	**416624**
42434	GARLK	**413246**
42436M1	C-R	**456105***
42438	C-R	**476470**
42438M1	C-R	**476470**
4243M1	C-R	**417487**
4243V	SPG	713750
42440	C-R	416556!
42440	C-R	**472157**
42440	VIC	5MR71
42446	GARLK	**413247**!
424469C91	IH	452742
42448	C-R	**472157**
42448	C-R	**472157**!
42449	SPICE	719316
42449-1	DANA	719316
424525	UNIVE	**415150**!*
42455	C-R	**472157***
42457	C-R	416556!
42457	C-R	**472157**
424575	MICH	**415138**!
424575	UNIVE	**415138**!*
42458	C-R	416556!
42458	C-R	**472157**
424588	MICH	**417538**
424600	MICH	**417247**!
424600	UNIVE	**455123**
42461	GARLK	**416271**!
424625	MICH	**415066**
424625	UNIVE	**415066***
42469	BUDD	5924
42470	C-R	47150S
424740	ADAMS	**415449**!
42475	C-R	**415196**!*
42477	C-R	**415196**!
42478	C-R	**415196**!
42479	C-R	**415196**!
4248	C-R	**472810**!
42480	C-R	**415196**!
42481	C-R	**415196**!
42482	C-R	**415196**!
42485	C-R	**415196**!*
42486	C-R	**415196**!*
424872	ADAMS	**415025**
42490	IH	**471733**
42490D	IH	**471733**
4249CA	SPG	4249
424A38	C-R	**476470**!
424A38	C-R	**476470**
424AM3	C-R	**417487**!
424AM3	C-R	**417487**
424AM38	C-R	**476470**!
424AM38	C-R	**476470**
424AMM38	C-R	**476470**!
424AMM38	C-R	**476470**
424B3	C-R	**417487**!
424B3	C-R	**417487**
424B34	C-R	**416288**
424B38	C-R	**476470**!
424B38	C-R	**476470**
424BM34	C-R	**416288**
424BM38	C-R	**476470**!
424BM38	C-R	**476470**
424BM38-T8	C-R	**476470**!
424BM38-T8	C-R	**476470**
424C32410	TROS	**412473**!
424F38	C-R	**476470***!
424FM38	C-R	**476470**!
424FM38	C-R	**476470**
424HMS226-Q6	C-R	**411348**!
424W3-M1	C-R	**417487**
4250	C-R	**472810**!
42500	SPICE	710202
4250222	ALLCH	**473016**!
4250224	ALLCH	**473016**!
4250225	ALLCH	**472070**
425025	ADAMS	**471787**!
425025	LETN	**471787**!
4250604	ALLCH	**474281**!
425067	ADAMS	**416107**!
425067	ADAMS	455073
425068	ADAMS	**472185**!
425068	LETN	**472185**!
425069	ADAMS	**417357**
425069	ADAMS	455192!
425076	O-M	**481537**
4250832	ALLCH	**415035**!
4250832	ALLCH	**415035**
4250833	ALLCH	**473228**
4250B	JN-MN	**473227**
4251	C-R	**472810**!
4251203	ALLCH	**410308**!
4251705	ALLCH	**472409**!
4251784	ALLCH	**472012**
4251862	ALLCH	**471341**!
42518621	ALLCH	**471341**!
42518S	NATL	312518!
42518S	NATL	342518
4251D	GOODM	**417278**
4251F	GOODM	**417278**
42520	MID	**471689**!
42520	MID-R	**471689**!
42520001	IVECO	713097
42521	MID	**471649**!
42521	MID-R	**471649**!
4252117	ALLCH	**415379**!
4252117	ALLCH	**415379**
4252153	ALLCH	**417316**!
4252154	ALLCH	**411376**!
4252177	ALLCH	**415379**!
4252177	ALLCH	**415379**
425224	C-R	**416282**
42523	IH	**471827**!
42523TB	TRSCM	**472157**
4252491	ALLCH	**473475**
42524SB	TRSCM	**472157**
4252612	ALLCH	**471192**
4252649	ALLCH	**472287**!
4252796	ALLCH	425RR
42528	C-R	**416891**!*
4252815	ALLCH	**472179**
4252825	ALLCH	**472636**!
4252849	ALLCH	**472258**!
4252F	GOODM	**415645**!
4252F	GOODM	455104
4253	C-R	**417487**
4253052	ALLCH	**416271**!
42530527	ALLCH	**416271**!
425310	C-R	**416292**
4253106	ALLCH	424
425312	C-R	**416294**!
4253124	ALLCH	450457
425312M1	C-R	**416294**!
425314	C-R	**418029**!
425314M1	C-R	**418029**!
42532	C-R	455734=
4253248	ALLCH	**473463**
4253264	ALLCH	40438S
4253265	ALLCH	**473367**!
4253265	ALLCH	**473367**
4253297	ALLCH	40438S
42532M1	C-R	455015
4253341	ALLCH	**471571**
42533414	ALLCH	**471571**
4253382	ALLCH	**417316**!
4253388	ALLCH	**416892**!
42534	C-R	**416288**!
42534	GR-DV	**416288**!
42534M1	C-R	**416288**!
4253541	ALLCH	**472185**!
42536	C-R	**456105**
42536	FAIRB	**456105**
42536	GARLK	**471271**!
4253670	ALLCH	40370S
42536706	ALLCH	40370S
4253690	ALLCH	**473243**
4253691	ALLCH	**472636**!
42536M1	C-R	**456105**
4253764	ALLCH	**415001**!
4253765	ALLCH	**473231**!
4253769	ALLCH	**455583N**!
4253781	ALLCH	**417171**!
4253792	ALLCH	55141
42538	C-R	**476470**
42538	GR-DV	**476470**
4253838	ALLCH	**415001**!
42538M1	C-R	**476470**
4253930	ALLCH	**472234**
4253982	ALLCH	**472287**!
42539825	ALLCH	**472287**!
4253999	ALLCH	**455336**
4253M1	C-R	**417487**
4254	C-R	**472810**!
4254026	ALLCH	**473473**
4254050	ALLCH	**471570**!
42540690	ALLCH	**415027**!
42540690	ALLCH	**415027**
4254079	ALLCH	**471787**!
42541	C-R	**416891**!
4254101	ALLCH	**473010**
42541011	ALLCH	**473010**
4254104	ALLCH	**473010**
4254122	ALLCH	**470606**!
4254152	ALLCH	**470898**
4254177	ALLCH	**471413**
42541771	ALLCH	**471413**
42542	C-R	**416891**!
4254227	ALLCH	40301S
4254228	ALLCH	**415458**!
4254269	ALLCH	**470954**!
4254277	ALLCH	**471413**
42543	C-R	**416891**!
4254341	ALLCH	40973S
42544	C-R	**416891**!
42545	C-R	**416891**!
4254544	ALLCH	**416339**
42546	C-R	**416891**!
4254670	ALLCH	**471787**!
42548	GARLK	**470605**!
4254838	ALLCH	**472636**!
4254874	ALLCH	**473228**!
4254875	ALLCH	**471649**!
4254912	ALLCH	**470530**!
4254932	ALLCH	40389S
4254936	ALLCH	**472258**
4254954	ALLCH	**450639**
42549543	ALLCH	**450639**
4254963	ALLCH	**471554**!
4254976	ALLCH	40433S
4254986	ALLCH	40433S
42549865	ALLCH	40433S
42550	C-R	AR22+370106A
42550+455024	C-R	380065A
4255130	ALLCH	**471829**
42551309	ALLCH	**471829**
42553123	ALLCH	**472439**
4255587	ALLCH	**471424**!
42557	C-R	**416135**!*
42557	GARLK	**415449**!
4255839	ALLCH	**471787**!
42558395	ALLCH	**471787**!
4255851	ALLCH	40389S
425587	ALLCH	**471424**!
4255B	JN-MN	**417602**!
4256	C-R	240470
42560	C-R	**416891**!
4256022	ALLCH	**470530**
425643	ADAMS	**450593**!
425643	LETN	**450593**!
425643	WABCO	**450593**!
42565	C-R	**416891**!
42568	C-R	**416135**!
42569	C-R	**416135**!
42569	GARLK	**416273**
42570	C-R	**416135**!
42571	C-R	**416135**!
42573	C-R	**415045**!*
425748	WHITE	**417316**!
42575	C-R	**416891**!
42576	C-R	**415045**!
425824	ADAMS	**471821**!
425824	LETN	**471821**!
42591	CHRYS	**471354**!
425931	MC-CL	**472287**!
4259OS	JN-MN	**472492**!
425CHA38	C-R	**476470**!
425CHA38	C-R	**476470**
425F38	C-R	**476470**!
425F38	C-R	**476470**
425FM38	C-R	**476470**!
425FM38	C-R	**476470**
425N224T-8	C-R	**416282***
425N230	C-R	475348N
425N3	C-R	**417487**!
425N3	C-R	**417487**
425W224	C-R	**416282**
425W24-L	C-R	6180=
425W3	C-R	**417487**
425W310	C-R	**416292**
425W314	C-R	**418029**!

! Industrial Size/Type * Minor Width Difference

= The U.S. customer service number is 877-4-TIMKEN. The Canadian customer service numbers are 800-565-4927 (English) and 800-565-0438 (French-Canadian).

Mfr. No.	Name	Zero Duplication or Recommended Industrial
425W34	C-R	**416288**!
425W34-M1	C-R	**416288**!
425W36	C-R	**456105**
425W38	C-R	**476470**
425W38-M1	C-R	**476470**
4260	C-R	**472810**!
4261	C-R	**472810**!
42612	C-R	55333=
42615	AMC	50327
42616	C-R	**416137**
42617	C-R	457661V=
42617	GARLK	**413248**
42620	C-R	**416137**
42621	C-R	**416137**
42622	C-R	370065A>
42622	C-R	376590A%
42622	C-R	380065A>
42623	C-R	370065A>
42623	C-R	376590A%
42623	C-R	380065A>
42624	C-R	370107A
42624	C-R	380065A
42625	C-R	370065A>
42625	C-R	376590A%
42625	C-R	380065A>
42626	C-R	370030A
42626	C-R	380065A
42627	C-R	370048A
42627	C-R	370349A
42627	C-R	380048A
42627	C-R	386025A
42627	C-R	386590A
4262B	JN-MN	**471224**!
42630	C-R	370065A
42630	C-R	376590A%
42630	C-R	380065A
42631	C-R	370065A
42631	C-R	**415058**
42632	GARLK	**415483**
42635	C-R	**417518**
4263B	JN-MN	**471763**
42640	TROS	**470354**
42644	C-R	**415058***
42644	GARLK	**415458**!
4264B	JN-MN	**471760***
42650	C-R	**415058**
426512	ADAMS	**417356**!
426512	ADAMS	455188
426512	LETN	**417356**!
426512	LETN	455188
426513	ADAMS	**471570**!
426513	LETN	**471570**!
426514	ADAMS	**472394**
426514	WABCO	**472394**
426515	ADAMS	**416271**!
426515	LETN	**416271**!
42656	GARLK	**417343**!
426575	UNIVE	455251H*
4265B	JN-MN	**417351**!
426600	MICH	416163
426600	UNIVE	416163
426625	MICH	456890
426625	UNIVE	456890
4266B	JN-MN	**415711***
42670	C-R	**415058**
42671	C-R	**415058**
42672	C-R	**415058**
42673	C-R	**416158**
4267B	JN-MN	**327303**!
4268	DURA	**450039**
42683	GARLK	**416664**!
426834-C1	IH	HU065A
4268B	JN-MN	**417349***
4269	SPG	5667
4269057	CHRYS	331228H
4269183	CHRYS	3173
4269183	CHRYS	710928
42698	GARLK	**415984**!
4269956	CHRYS	710058
4269B	JN-MN	55155=
4269BX	SPG	**417505**
4269BX	SPG	5667
4270	C-R	50199S
4270	C-R	6863S
4270	SPG	224560
4270	SPG	45X68X7!
4270B	JN-MN	**417343**!*
4271	C-R	50199S
4271	C-R	6863S
42710	GARLK	**417316**!
427112	WHITE	**417344**!
42719	GARLK	**415960**
427290	ADAMS	**473228**
427290	LETN	**473228**
4273275	CHRYS	3638
427394	WHITE	**472164**!
4273S	SPG	55103S
427424-R92	IH	370001A
42746D	IH	**471442**!
4274B	JN-MN	**472012***
427552R91	IH	370001A
427553R91	IH	HU066A
427554R1	IH	730016
4275B	JN-MN	**455026**
42770	GARLK	**415303**!
4277B	JN-MN	**416077**
42780	HYST	**472636**!
42782	GARLK	**417344**!
42791	GARLK	**417158**!
4279M	BRAD	**471554**!
4280	C-R	50199S
4280	C-R	6863S
42800	C-R	370030A
42800	C-R	370338A
428119C91	IH	370023A
42812	GARLK	**416921**!
4281B	JN-MN	**472299**
428455C91	IH	370003A
42847	KELSE	**416297**
428472	ADAMS	**415938**
428472	LETN	**415938**
428472	WABCO	**415938**
428489	ADAMS	**417196**!
428489	LETN	**417196**!
428600	MICH	**416167**!
428600	UNIVE	**416167**!
428613	MICH	417267
428625	MICH	**417269**!
428625	UNIVE	**417269**!
42867	SPICE	710389
42867	VIC	710389
4286B	JN-MN	**416666**
42875	HYST	455308
4287B	JN-MN	450129
4287B	JN-MN	**472826**!
428806	ADAMS	**415991**
428806	ADAMS	455146!
428806	LETN	**415991**
428806	LETN	455146!
428806	WABCO	**415991**
428806	WABCO	455146!
42884	HYST	**473448**
4288B	JN-MN	**473228**
4289B	JN-MN	**412473**!
429-2979	STEM	**417484**!
4290B	JN-MN	**456105***
42933205	TROS	9339S
42940D	IH	**471733**
4295904	CHRYS	3459
4297B	JN-MN	**417316**!
4298	DICO	203015
4298S	SPG	722109
429932	ADAMS	**416888**!
429932	LETN	**416888**!
429972	ADAMS	**473228**!
429972	LETN	**473228**!
429972	WABCO	**473228**!
42E29X60777	FWD	**473462**
42E3Y393	FWD	**471141**!
42E3Y569	FWD	**472409**!
42E7Y1039	FWD	**473215**!
42E7Y1040	FWD	**450593**!
42N1568	WGEAR	240009
42X51514A	JOHND	340787
42X51927A	JOHND	**481181**!
42X53103A	JOHND	240733
42X55X7ASN	ISP	42X55X7
42X55X8SC	TRSCM	42X55X8!
42X55X8TC	TRSCM	42X55X8!
42X56916A	JOHND	**471267**!
42X56X7SC	TRSCM	42X56X7!
42X56X7TC	TRSCM	224220
42X56X7TC	TRSCM	42X56X7!
42X56X8SB	TRSCM	**473573**
42X58X7SC	TRSCM	42X58X7!
42X58X7TC	TRSCM	42X58X7!
42X60X7SC	TRSCM	42X60X7!
42X60X7TC	TRSCM	42X60X7!
42X60X8SB	TRSCM	1953
42X62X8SC	TRSCM	42X62X8
42X62X8TC	TRSCM	42X62X8
42X65X10SC	TRSCM	42X65X10!
42X65X10TC	TRSCM	42X65X10!
42X68X10	SIMRT	42X68X10
42X68X10SC	TRSCM	42X68X10
42X68X10TC	TRSCM	42X68X10
42X68X8SC	TRSCM	42X68X8
42X68X8TC	TRSCM	42X68X8
42X70X10SC	TRSCM	42X70X10
42X70X10TC	TRSCM	42X70X10
42X72X10SC	TRSCM	42X72X10!
42X72X10TC	TRSCM	42X72X10!
42X72X8ASN	ISP	42X72X8
42X80X10SC	TRSCM	42X80X10
42X80X10TC	TRSCM	42X80X10
42X80X8SC	TRSCM	42X80X8
42X80X8TC	TRSCM	42X80X8
43	GARLK	320457
43000	BLUE	**412920**
43000	TROS	**471526**!
43000239	AMC	470547
4300121	FULLE	710211
43001S	TROS	**473215**!
43002	TROS	410059
43002	TROS	**470380**!
4300204	FULLE	**473454**
430032	CATER	**417349**!
43003S	TROS	410059
43003S	TROS	**470380**!
43006	TROS	**473228**!
43007	TROS	**472185**!
430082A	SPG	712127
43008S	TROS	**472439**
43009	GARLK	**417349**!
43009	TROS	**472924**!
4300B	JN-MN	**415035**!
4300B	JN-MN	**415035**
4300D5	WHITE	**410737**!
43011	TROS	**470530**!
4301106	ALLCH	**418028**
4301106	ALLCH	455137!
43012	TROS	**473464**
43013	TROS	**412119**!
430131A	SPG	712128
43014	TROS	**473467**!
4301461	ALLCH	**471137**
43015	DANA	**472258**
43015	TROS	**471224**!
4301537	ALLCH	**471763**
43015379	ALLCH	**471763**
43016S	TROS	**472409**
43018	GARLK	**417350**!
43018	TROS	**412920**!
43019	TROS	**471192**
4302	NATL	710067
43020S	TROS	**470625**!
43021	TROS	**470954**!
430218A	SPG	**471267**
430218N	SPG	**471267**
43022	TROS	**472287**!
430220A	SPG	712129
4302452	ALLCH	**450040**
43024S	TROS	**471763**
43025	TROS	**471765**!
43026S	TROS	**471766**!
43027	TROS	**471801**!
43028S	TROS	**473016**!
430298	ALLCH	**470380**!
43030	TROS	**472179**
430304	ALLCH	**472572**!
430305	ALLCH	**416125**!
430306	ALLCH	**473258**
430307	ALLCH	**472258**!
43032	TROS	**471649**!
43033	GARLK	**415995**!
43033	GARLK	**415995**!
43034	TROS	**470712**!
43035	TROS	**473466**
43036	TROS	**473235**!
43039	TROS	**472636**!
43040	TROS	**412040**
4304084	ALLCH	**471570**!
430413R91	IH	**471504**
43042	GARLK	**417351**!
43043S	TROS	**410496**!
43044	TROS	**471689**!
43045S	TROS	**471442**!
43046S	TROS	**471827**
43047S	TROS	**410708**
43048	TROS	**471829**
43050	C-R	455197N
43051	C-R	455197N
43051S	TROS	**471344**
43054S	TROS	**476470**
43054S	TROS	**476470**!
43055	TROS	**415458**!
43055	VIC	5M89
4305534	ALLCH	**471554**!
43056	TROS	**417316**!
43057	TROS	**417344**!
4305798	ALLCH	**415023**
43058	TROS	**415960**
430600	ALLCH	487945
430600	MICH	**417539**!
430600	UNIVE	**417539**!
43060S	TROS	**415995**!
430625	MICH	**417273**
430625	UNIVE	**417273**

! Industrial Size/Type * Minor Width Difference > Hub Mount % Spindle Mount
= The U.S. customer service number is 877-4-TIMKEN. The Canadian customer service numbers are 800-565-4927 (English) and 800-565-0438 (French-Canadian).

Mfr. No.	Name	Zero Duplication or Recommended Industrial
43063	*TROS*	**476470**
43064	*TROS*	**415023**
43065	*TROS*	**416891**!
43066	*TROS*	**415041**
43067S	*NATL*	240319
43067S	*TROS*	**416271**!
43068	*TROS*	**415449**!
43069	*TROS*	**417351**!
43070S	*TROS*	**415379**
43071	*C-R*	455197N
43071	*TROS*	**417205**!
43071	*VIC*	2205
43072	*C-R*	455197N*
43073	*C-R*	455197*
43073	*TROS*	416556!
43073	*TROS*	**472157**
4307359	*ALLCH*	**417354**!
43074	*TROS*	**416888**!
43075	*HYST*	**473442**!
43075	*TROS*	**417247**!
43077	*TROS*	**416706**!
43078	*TROS*	**415991**
43079S	*TROS*	**415379**
43080	*TROS*	**417492**
43083	*TROS*	415656
43084	*TROS*	**471264**!
43085	*SPICE*	714675
43085	*TROS*	**473215**!
430852-2	*FORD*	714675
43086	*TROS*	**470380**!
43089S	*TROS*	**470334**!
43092	*TROS*	**470530**!
43093	*TROS*	**471192**
43094	*TROS*	**470954**!
43095	*TROS*	**473460**
43095S	*NATL*	340847
43096	*TROS*	**471760**
43097	*TROS*	**471763**
43098	*TROS*	**471765**!
4309B	*JN-MN*	**473231**
430D5	*WHITE*	**473215**!
4310	*C-R*	50199S
4310	*C-R*	6863S!
4310	*NATL*	5699
43100	*TROS*	**472397**!
4310030	*ALLCH*	**450593**!
43101	*TROS*	**472636**!
43103	*TROS*	**472258**!
43104	*GARLK*	**417621**!
4310467	*ALLCH*	**471750**!
4310487	*ALLCH*	**471750**!
4310523	*ALLCH*	**471192**
43105279	*ALLCH*	**471643**!
43107	*TROS*	**417316**!
4310986	*ALLCH*	**471466**!
4311035	*WOOL*	455022
431106	*ALLCH*	**418028**
431106	*ALLCH*	455137!
43110S	*TROS*	**416288**!
4311125	*ALLCH*	**474281**!
43113	*TROS*	**415072**
4311323	*ALLCH*	**416332**!
43113232	*ALLCH*	**416332**!
43114	*TROS*	**416229**
43115S	*TROS*	**415449**!
43116	*GARLK*	**416288**!
43116	*TROS*	**417621**!
43117	*TROS*	**417181**!
43119	*TROS*	**415991**!
43119	*TROS*	**415991**
431194C91	*IH*	**473243**
4312	*C-R*	50199S
4312	*C-R*	6863S
43121	*TROS*	**417191**
43123	*TROS*	**415960**
43124	*TROS*	**471554**!
43125	*TROS*	**473215**!
43127	*TROS*	**473367**
43128	*TLSMI*	**415645**!
43128	*TLSMI*	455104
43128	*TROS*	**473228**!
43129	*TROS*	**473232**!
43130	*C-R*	**417520**
43130	*TROS*	**472185**!
43131	*C-R*	**417520**
43132	*TROS*	**470530**!
43133	*TROS*	**411253**!
43134	*TROS*	**412119**
43135	*TROS*	**471192**
43137	*TROS*	**471766**!
43138	*TROS*	**472179**
43139	*TROS*	**473179**!
4313B	*JN-MN*	**415036***
43140	*TROS*	**472394**
43141	*C-R*	55611=
43141	*TROS*	**472397**!
43142S	*TROS*	**472015**!
43143	*GARLK*	**417171**!
43143	*TROS*	**410308**
43145	*TROS*	**472636**!
43146	*SPICE*	**417158**!
43146	*TROS*	**472164**!
431461	*ALLCH*	**471137**
43147	*C-R*	416144
43148	*TROS*	**470898**
43149	*TROS*	**472492**!
4314976	*FIAT*	710359
4314B	*JN-MN*	**417487**
4315	*C-R*	50199S
4315	*C-R*	6863S
4315	*SKIL*	50209
43150	*TROS*	**473227**!
43151	*C-R*	416144
43151	*TROS*	**471271**!
43152	*C-R*	416144
43153	*TROS*	**415001**!
431537	*ALLCH*	**471763**
43154	*SPICE*	710241
43154	*TROS*	**415458**!
431543	*WHITE*	**455336**
43155	*TROS*	**417316**!
43156	*TROS*	**417344**!
4315694	*ALLCH*	**415234**!
43157	*TROS*	**415960**
43158	*TROS*	**416921**!
43159S	*TROS*	**416654**
4315B	*JN-MN*	**415025***
43160	*TROS*	**415995**!
43160	*TROS*	**415995**!
431616R91	*IH*	370021A
431616R92	*IH*	370021A
431619R91	*IH*	370036A
431619R91	*NAVST*	370349A
43161S	*TROS*	**416288**
431620R92	*IH*	HU009A
431621R2	*IH*	733067
43162S	*TROS*	**476470**
43162S	*TROS*	**476470**!
4316315R1	*IH*	2261
4316316R1	*IH*	2261
43164	*TROS*	**415035**
43167	*TROS*	**416865**!
43168	*TROS*	**416239**!
43169S	*TROS*	**416271**!
4316B	*JN-MN*	**450765**!
43170	*TROS*	**416282**
43170	*VIC*	5M867
43171	*TROS*	**417602**!
43173	*TROS*	415137!
43173	*TROS*	**418028**
43174S	*TROS*	415146!
43174S	*TROS*	**415991**
43175	*TROS*	**415449**!
43176	*TROS*	**417343**!
43177	*TROS*	5578
43178	*TROS*	**417171**!
43179	*TROS*	**417181**!
43180	*TROS*	**412473**!
43184	*TROS*	**416706**
43185	*TROS*	**417484**!
43186S	*TROS*	**417159**
43189	*TROS*	**410825**
4319	*WOODB*	**415458**!
43190	*TROS*	**415437**
43194	*SPG*	43194
43194	*TROS*	**416394**
43196	*TROS*	8996S=
43198	*TROS*	**471264**
4320	*C-R*	50199S
4320	*C-R*	6863S
43200	*C-R*	**417238**
43201	*C-R*	**417238**
43203	*TROS*	**471554**
43205	*TROS*	**473213**!
43206	*TROS*	43089S
43207	*TROS*	40059S
432079C1	*IH*	**473444**
43208	*TROS*	7886S
43211	*TROS*	**472185**!
43212	*TROS*	40071S
43214	*TROS*	40085S
43215	*TROS*	40101S
43218	*TROS*	240119
43219	*TROS*	**471224**
43220	*TROS*	**471413**
43221	*TROS*	**470954**
43224	*TROS*	**471760**
43225	*TROS*	**471763**
43226	*TROS*	**471766**
43228	*TROS*	40169S
43229	*TROS*	40183S!
43230	*TROS*	**471571**
43230807.5	*TROS*	**417172**
43231607.5	*TROS*	**418028**
43231607.5	*TROS*	455137!
43231610	*TROS*	**418028**
43231610	*TROS*	455137!
43232007.5	*TROS*	**415085**!
43232007.5	*TROS*	456648
43232010	*TROS*	**415085**!
43232010	*TROS*	456648
43232410	*TROS*	**417191**
43232410	*TROS*	456585
43233207	*TROS*	**415991**
43233207	*TROS*	**415991**!
43233207.5	*TROS*	**415991**!
43233207.5	*TROS*	**415991**
43233207C	*TROS*	**415991**
43233207C	*TROS*	**415991**!
43233209	*TROS*	**415991**!
43233209	*TROS*	**415991**
43233210	*TROS*	**415991**
43233210	*TROS*	455146!
43233213	*TROS*	**415991**
43233213	*TROS*	**415991**!
43234	*TROS*	40208
43234408	*TROS*	**416919**
43235	*TROS*	**471647**
43236	*GARLK*	**417181**!
43237	*TROS*	**471689**
43239	*OLIVE*	**418028**
43239	*OLIVE*	455137!
43239	*TROS*	40286
43241	*TROS*	40301S
43242	*TROS*	40316S
43243	*TROS*	240319
43244	*TROS*	40328
43245	*TROS*	40337S
432452	*ALLCH*	**450040**
43248	*TROS*	40360S!
43249	*TROS*	40370S
43250	*TROS*	40973S
43251	*TROS*	**474276**
43251	*VIC*	5MR1008
43252-M0200	*CEW*	1128
43253	*TROS*	40389S
43254	*TROS*	**472354**!
43255	*TROS*	417267
43256	*TROS*	42352S
43257S	*TROS*	40401
43259	*TROS*	351487
43260S	*TROS*	40433S
43261S	*TROS*	**471647**
43262	*TROS*	40468
43263	*TROS*	442380
43264	*TROS*	40520S
43267S	*TROS*	40555
43267S	*TROS*	40555S!
43269	*TROS*	40566S
43269S	*TROS*	40555
43269S	*TROS*	40555S!
4327	*C-R*	11X17X4
43270	*TROS*	40568S
43272	*TROS*	40627S=
43274	*TROS*	**471737**=
43275	*GARLK*	**417353**!
43276	*TROS*	40769S
43278	*TROS*	340787
43279D	*IH*	**450065**
43280	*TROS*	41013S
432802C91	*IH*	331227H
43281D	*IH*	450260
43282	*TROS*	41075S
43283	*TROS*	46997S
43283D	*IH*	**473467**
43284	*TROS*	43086S
43285	*TROS*	45013S
4328B	*JN-MN*	**455330**!*
43291	*TROS*	45187S
43293	*TROS*	45525S
43294	*TROS*	45031S
43295	*TROS*	45825S
43296	*TROS*	45827S
43297S	*TROS*	**470565**!
43298S	*TROS*	**417563**
43299S	*TROS*	475348N
432A31207.5	*TROS*	**455336**
432A31607.5	*TROS*	**418028**
432A31607.5	*TROS*	455137!
432A31609.5	*TROS*	415137!
432A31609.5	*TROS*	**418028**
432A32007.5	*TROS*	**415085**!
432A32007.5	*TROS*	456648
432A32407.5	*TROS*	**417191**
432A32407.5	*TROS*	455165!
432A33207.5	*TROS*	**415991**
432A33207.5	*TROS*	455146!
432B31606.5	*TROS*	**418028**

! Industrial Size/Type * Minor Width Difference

= The U.S. customer service number is 877-4-TIMKEN. The Canadian customer service numbers are 800-565-4927 (English) and 800-565-0438 (French-Canadian).

Mfr. No.	Name	Zero Duplication or Recommended Industrial
433	*CARVR*	**471766**!
43300	*C-R*	110X130X12V
433001	*LIMA*	**451583**!
433003	*LIMA*	**480821**!
43301	*C-R*	110X130X12V
4330186	*ALLCH*	**473228**
43303	*C-R*	2261
43304	*TROS*	**471750**!
43308D	*IH*	**472287**!
43309	*TROS*	**471391**!
4330B	*JN-MN*	**471649**!
43310	*C-R*	110X130X12
43311	*C-R*	2261
43311	*TROS*	**471267**!
4331142	*ALLCH*	**476838**!
43313S	*TROS*	**471984**
43317	*TROS*	**415036**
43317R	*DIA*	**474278**!
43318	*TROS*	**417343**!
4331846	*ALLCH*	470059
4331846	*ALLCH*	**470380**!
4331983	*ALLCH*	**417484**!
433202A	*LIMA*	**472394**
433204A	*LIMA*	**470774**!
43320S	*TROS*	415192N
43322S	*TROS*	**417349**
43324S	*TROS*	415899N
43324S	*TROS*	**416624**
43325	*C-R*	110X135X12
43327	*C-R*	110X135X13!*
43328	*C-R*	455310
43331	*TROS*	**472924**!
43338	*C-R*	110X140X12V
43340	*C-R*	110X140X12!
43340	*C-R*	110X140X13!*
43340	*C-R*	231108
43340	*TROS*	**481537**
43340	*VIC*	5M559
433407A	*LIMA*	**472299**
43341	*C-R*	110X140X12
43341	*TROS*	45653S
43342	*C-R*	110X140X12
43343	*C-R*	110X140X12
43343S	*TROS*	**417316**!
4335	*C-R*	11X22X7!
4335	*C-R*	221122
4335255	*ALLCH*	**415938**
43355	*C-R*	110X145X12
43355	*C-R*	110X145X13
43356	*GMC*	6703S
43359D	*IH*	**416738**!
43359D	*IH*	450096
433602A	*LIMA*	**470898**
433603A	*LIMA*	**411376**!
43364	*GARLK*	**412473**!
43370	*C-R*	110X150X12!
43370	*C-R*	110X150X15
433708	*WHITE*	**416125**!
433759	*WHITE*	455614
43381	*GMC*	**472179**
43385	*C-R*	110X155X15*
4338553	*CHRYS*	710502
4338655	*AMC*	**473235**
43387	*SPICE*	710388
43387	*VIC*	710388
4338893	*CHRYS*	710046
4338968	*CHRYS*	**472572**
4338993	*CHRYS*	710046
4338B	*JN-MN*	**416738**!
4338B	*JN-MN*	450096
43390	*C-R*	110X160X15*
43394	*GARLK*	**417354**!
4339B	*JN-MN*	450275
434	*CARVR*	**471766**!
4340	*C-R*	50199S
4340	*C-R*	6863S
43401	*TROS*	8460N
434049	*WHITE*	50501
4340655	*ALLCH*	**471570**!
434084	*ALLCH*	**471570**!
4340B	*JN-MN*	**472397**!
4341209	*ALLCH*	**417621**!
4341925	*ALLCH*	240385
434241	*WHITE*	**471689**!
43430-60810	*SUZUK*	4904
43431-50G00	*SUZUK*	710394
43431-50G10	*SUZUK*	710394
43431-60820	*SUZUK*	4904
43431-60B20	*SUZUK*	1188
43431-60G00	*SUZUK*	710394
43431L	*C-R*	55276=
4343903	*CHRYS*	4462N
43442D	*IH*	40071S
4344631	*SPICE*	**415437**
4344631	*SPICE*	**415437**!
4344663	*ALLCH*	**473448**
4345	*C-R*	11X26X7
43451	*GMC*	**470712**!
4345207	*ALLCH*	**417344**!
4345B	*JN-MN*	55692=
43460	*GARLK*	**416624**!
4346231	*ALLCH*	**415938**
43463D	*IH*	200640
4346686	*ALLCH*	**450639**
434686C1	*IH*	352637
43473	*ALLCH*	**473205**
4347933	*ALLCH*	**415001**!
4348	*C-R*	11X30X7
434877R91	*IH*	**417254**
434878R91	*IH*	**417254**
4348B	*JN-MN*	**417533**
4349736	*ALLCH*	**472234**
43499	*GARLK*	**417196**!
4349B	*JN-MN*	**415995**!
4350	*C-R*	50199S
4350	*C-R*	6863S
43500	*VIC*	5MR1009
435012N	*SPG*	**416654**
435013N	*SPG*	**415995**!
43502S	*TROS*	**473179**
4350319	*ALLCH*	**472394**
43504	*SPICE*	4525V
43509D	*IH*	**471192**
435101N	*SPG*	**416282**
4351142	*ALLCH*	**476838**!
4351188	*ALLCH*	**471341**!
4351731	*ALLCH*	**471820**
4353	*C-R*	6863S!
435316	*C-R*	55309*=
435316M1	*C-R*	**416624**!
43535POSA	*TRSCM*	7354N
4353982	*ALLCH*	**472287**!
4353VG3	*SPG*	4353
43543A	*HYST*	**323138**!
4355	*C-R*	50199S
4355	*C-R*	6863S
435534	*ALLCH*	**471554**!
43554SA	*TRSCM*	**416380**
43554SA	*TRSCM*	455198
4355645	*ALLCH*	**472394**
4355646	*ALLCH*	**471271**!
4355648	*ALLCH*	**471271**!
4356591	*ALLCH*	240119
43568	*GARLK*	**416332**!
4356B	*JN-MN*	**416271**!*
435798	*ALLCH*	**415023**
43580	*GARLK*	**415937**!
435805	*WHITE*	**450065**
43592-65D00	*SUZUK*	710522
435F220	*C-R*	5971
43601	*GARLK*	**417355**!
4360255	*ALLCH*	**473419**
4360256	*ALLCH*	**474264**
4360B	*JN-MN*	**415088**!
4360B	*JN-MN*	**415088**
4360LPD	*JN-MN*	**415088**
4360LUP	*JN-MN*	**415088**
43613	*GARLK*	**416125**!
4361B	*JN-MN*	**470334**!
4362642	*ALLCH*	**455583N**!
43630819.25	*TROS*	5751
436312	*C-R*	**412473**!
436316	*C-R*	55309*=
436316M1	*C-R*	**416624**!
43644	*RENAU*	224045
43644	*RENAU*	40X62X12!
4364411	*ALLCH*	**471539**!
436449-R91	*IH*	370023A
43646	*GARLK*	416041
43650	*C-R*	415425*
4365282	*ALLCH*	**471649**!
43660D	*IH*	**472287**!
43667	*GARLK*	**417205**!
43670	*C-R*	**415196**!
43671	*C-R*	**415196**!
4367238	*ALLCH*	**470596**
4367592	*ALLCH*	**472397**!
43675925	*ALLCH*	**472397**!
43682	*GARLK*	**416339**
4368323	*ALLCH*	**471472**!
4368324	*ALLCH*	**413246**
4368578	*ALLCH*	**474254**!
4368B	*JN-MN*	**415082**
43690	*C-R*	**415196**!*
4369005	*ALLCH*	472951
4369005	*ALLCH*	**474252**
43691	*C-R*	**416380**!*
4369324	*ALLCH*	**413246**
436A38	*C-R*	**417181**!
436B38	*C-R*	**417181**!
436BM312	*C-R*	**412473**!
436C312	*C-R*	**412473**!
436D5	*WHITE*	470059
436D5	*WHITE*	**470380**!
436F312	*C-R*	**412473**!
436FM312	*C-R*	**412473**!
436H312	*C-R*	**412473**!
436W3-M1	*C-R*	**417488**!*
43700	*C-R*	**415196**!
43701A	*C-R*	6906S
4370359	*ALLCH*	**417354**!
4370419	*ALLCH*	**471763**
43714	*C-R*	416147
4371692	*ALLCH*	**473214**!
43716927	*ALLCH*	**473214**!
43721	*GARLK*	**417211**!
437212	*C-R*	455650=
437228	*C-R*	455556
43722D	*IH*	**415001**!
4373	*C-R*	**417488**!
4373014	*ALLCH*	**455583N**!
437310	*C-R*	**417491**
437310M1	*C-R*	**417491**
437312	*C-R*	**412473**!
437312M1	*C-R*	**412473**!
437315	*C-R*	55309=
43733	*GARLK*	**416345**!
43734	*C-R*	**417171**!
43734M1	*C-R*	**417171**!
437359	*ALLCH*	**417354**!
43736	*C-R*	417490
43736M1	*C-R*	417490
43738	*C-R*	**417181**!
43738M1	*C-R*	**417181**!
4373M1	*C-R*	**417488**!
43745	*GARLK*	**415697**!
4374B	*JN-MN*	**451143**
43750	*C-R*	**415047**
43751	*C-R*	**415047***
43752	*C-R*	370037A>
43752	*C-R*	370338A%
43753	*C-R*	370037A>
43753	*C-R*	370338A%
43754	*C-R*	370037A
43754	*C-R*	370338A
43754	*C-R*	380048A
4375625	*ALLCH*	**455583N**!
4376	*AT SU*	**471766**
4376	*SPG*	717006
43761	*C-R*	370173A
43761	*C-R*	380036A
43762	*C-R*	380048A
43763	*C-R*	380048A
43763	*GARLK*	**417366**!
43764	*C-R*	370048A
43764	*C-R*	380048A
4376B	*JN-MN*	**471652***
43771	*C-R*	**416149**
43772	*C-R*	**416149**
4377B	*JN-MN*	55155*=
4378510	*ALLCH*	**455583N**!
43793	*C-R*	6635S
43795	*C-R*	6635S
43795	*C-R*	JV1210=
43797	*AMC*	6356
4379747	*ALLCH*	**471649**!
4379960	*ALLCH*	**415001**!
4379B	*JN-MN*	**472354**!
437B34	*C-R*	**417171**!
437W3	*C-R*	**417488**!
437W310	*C-R*	**417491**
437W312	*C-R*	**412473**!
437W312-M1	*C-R*	**412473**!
437W34	*C-R*	**417171**!
437W34-M1	*C-R*	**417171**!
437W36	*C-R*	417490
437W38	*C-R*	**417181**!
437W38-M1	*C-R*	**417181**!
43800	*C-R*	AR10+370020A
43800D	*IH*	**471224**!
43800DA	*IH*	**471224**!
438031	*WHITE*	**471103**!
4380B	*JN-MN*	**415303**!*
43810	*C-R*	417522
43811	*C-R*	417522
43820	*C-R*	415060*
43820	*WHITE*	**415025**
43838	*GEHL*	**470088**
43839	*GEHL*	**471192**
4384188	*CHRYS*	9316
438454-R92	*IH*	370001A
43850	*C-R*	415060
43850	*C-R*	455060
43860	*C-R*	370019A
43861	*C-R*	370019A
43865	*C-R*	370019A
4386879	*ALLCH*	**471649**!
43875	*C-R*	370034A

! Industrial Size/Type * Minor Width Difference > Hub Mount % Spindle Mount

= The U.S. customer service number is 877-4-TIMKEN. The Canadian customer service numbers are 800-565-4927 (English) and 800-565-0438 (French-Canadian).

Mfr. No.	Name	Zero Duplication or Recommended Industrial
4387605	*ALLCH*	**471688** =
4390	*C-R*	**474277** *
4390	*C-R*	**474277**
4390171	*ALLCH*	**455583N** =
4391019	*ALLCH*	**471472** !
43915	*VIC*	5M497
4393969	*ALLCH*	J1838 * =
4394689	*ALLCH*	77322V =
43950	*KELSE*	203025
4395B	*JN-MN*	**415150** ! *
43964D	*IH*	**415458**
4397500	*TAYLR*	**410308** !
4397500	*TAYLR*	473468
4397623	*CHRYS*	5650
4397712	*CHRYS*	5414
4397B	*JN-MN*	**417196** !
43995	*VIC*	5M466
4399B	*JN-MN*	**473232**
4399T2	*WHITE*	**415988**
43G	*OSHKO*	**455008**
43X55X8SC	*TRSCM*	43X55X8
43X55X8TC	*TRSCM*	43X55X8
43X65X8SC	*TRSCM*	43X65X8
43X65X8TC	*TRSCM*	43X65X8
44000	*C-R*	328039
440001	*WAYNE*	**471554** !
44001	*TROS*	**474277**
44001	*VIC*	**471195** !
440012	*WAYNE*	**471730**
44002	*TROS*	**470004** !
44004	*TROS*	**471530**
44005	*TROS*	**471281** !
44006	*TROS*	**471532**
44007	*VIC*	**470712** !
440070	*SPG*	**472185** !
44008	*TROS*	**471466** !
44008	*VIC*	**330385** !
44009S	*TROS*	**471466** !
4400RX	*SPG*	4400 =
44010	*C-R*	112X135X15 *
44010	*TROS*	50010
44011	*VIC*	**330385** !
44013	*TROS*	**471472** !
440132	*SPG*	**412920**
44014	*TROS*	**471535** !
44014	*VIC*	1062 =
440148SS	*SPG*	440148
44016	*VIC*	2551
44018	*TROS*	**471549** !
44018	*VIC*	224045
44018	*VIC*	40X62X12 !
4401RX	*SPG*	4401 =
44020	*TROS*	**471551** !
44020	*VIC*	1097N
44021	*TROS*	**471558**
44022	*TROS*	**471255** !
44022	*VIC*	1094 =
44023	*TROS*	**471553** !
44024	*TROS*	50026
44024	*VIC*	222510
44024	*VIC*	25X35X7 !
44025	*TROS*	**471554** !
44025	*VIC*	1097N
44026S	*TROS*	**471554** !
44027	*TROS*	**471567** !
44027	*VIC*	**471737**
44028	*VIC*	1163 =
44028S	*TROS*	**471567** !
44029	*TROS*	**474253**
4403	*FULLE*	**472179**
44030	*C-R*	112X140X13
44030	*TROS*	473414
44030	*VIC*	**472258** !
44030809	*TROS*	**416297**
44030809.75	*TROS*	370046A
44031	*TROS*	**471570** !
44031207	*TROS*	6358
44031608	*TROS*	**417353** !
44032	*SPERY*	204013
44032	*TROS*	450033
440324C1	*IH*	**451143**
440324C2	*IH*	**451143**
440325C1	*IH*	**471413**
44033	*TROS*	**474273**
44033009	*TROS*	2055
44033210	*TROS*	**417196** !
44034	*VIC*	**472299**
44034010	*TROS*	**416332** !
44035	*GARLK*	**417356** !
44035	*TROS*	**473415**
44036	*TROS*	**471137**
44038	*TROS*	**450039**
44039	*TROS*	**450040**
44040S	*TROS*	**450040**
44041	*TROS*	**450593** !
44043	*TROS*	**476838** !
44044	*VIC*	**472492** !
44045	*TROS*	**473426**
44045S	*TROS*	**473215** !
44046	*TROS*	**450048**
44047	*TROS*	**471750** !
44047	*VIC*	1035 =
44048	*TROS*	470050
44049	*TROS*	**473427**
44050	*TROS*	**471354** !
44051	*TROS*	**473213** !
44052	*TROS*	450054
44053	*TROS*	**473215** !
44054	*TROS*	**471354** !
44054	*VIC*	**472164** !
44054S	*TROS*	**473215** !
44055	*GARLK*	**417357**
44056	*TROS*	**473225** !
44057	*TROS*	**473438**
44057	*VIC*	**471192**
44058	*TROS*	470059
44058	*TROS*	**470380** !
44059	*TROS*	470059
44059	*TROS*	**470380** !
44059S	*TROS*	470059
44059S	*TROS*	**470380** !
44061	*TROS*	470950 !
44061	*TROS*	6241S
44062	*TROS*	**474264**
44063	*TROS*	**471820**
44064	*TROS*	**471821** !
44065	*TROS*	**450065**
44066	*TROS*	**473367** !
44066	*TROS*	**473367**
44067S	*TROS*	**473367** !
44067S	*TROS*	**473367**
44068S	*TROS*	**473228**
44069	*TROS*	**450068**
44069	*VIC*	1040 =
4406B	*JN-MN*	**415196** ! *
44070	*TROS*	**473232**
44071	*VIC*	**472164** !
44071S	*TROS*	**473232**
44072	*TROS*	**472185** !
44073	*TROS*	**472439**
44073	*VIC*	**470898**
44074	*TROS*	**481864**
44075	*GARLK*	**416130** !
44075	*TROS*	450073
44076	*TROS*	**474265**
44076	*VIC*	224045
44076	*VIC*	40X62X12 !
44077	*TROS*	50075 =
44078	*TROS*	**470334** !
44078	*VIC*	224045
44078	*VIC*	40X62X12 !
44079	*TROS*	**474281** !
44080	*TROS*	**473444**
44081	*VIC*	1070 =
44082	*TROS*	**473446**
44083	*TROS*	50081
44084	*TROS*	**473238**
44085	*TROS*	**472924** !
44085	*VIC*	1012
44085	*VIC*	1012N
44086	*TROS*	**450084** !
44087	*VIC*	**473238** !
44087S	*TROS*	**450084** !
44088	*TROS*	**470530** !
440883R91	*IH*	**471267** !
44089	*TROS*	470086
4408B	*JN-MN*	**451583** ! *
44090	*C-R*	112X150X15 *
44090	*TROS*	**473313**
440905	*SPG*	4148
440905	*SPG*	**471424** !
44091S	*TROS*	**470088**
44092	*TROS*	450089
44092	*VIC*	224040
44092	*VIC*	40X60X10 !
44093	*TROS*	**450090**
44094	*VIC*	**471827**
44095	*TROS*	**473458** !
44096	*VIC*	1091 =
44097	*TROS*	**473462**
44098	*TROS*	**473464** !
44098	*TROS*	**473464**
44099	*TROS*	**416738** !
44099	*TROS*	450096
4409B	*JN-MN*	**471765** !
440RC	*SUL*	**415035** !
440RC	*SUL*	**415035**
44100	*TROS*	**413469** !
44101	*TROS*	**412943**
44102	*TROS*	**411253** !
44102	*VIC*	**472492** !
44103	*TROS*	**410694** !
44104	*TROS*	**412119** !
44105	*TROS*	**410102**
44106	*TROS*	**410987** !
44107	*TROS*	450104
44108	*TROS*	**414045** !
4410B	*JN-MN*	**471571** *
44110	*TROS*	**473471**
4411035	*WOOL*	**417604**
44112	*TROS*	**473441**
441130S	*WMG*	441130
44114	*TROS*	450111
44116	*TROS*	**473467**
44116	*VIC*	1077 =
44117	*TROS*	**473450**
44118	*TROS*	**472572** !
44119	*TROS*	**473449**
4411B	*JN-MN*	**471231** !
44120	*TROS*	**471442** !
44121S	*TROS*	**471442** !
44122	*TROS*	**471224** !
44123	*TROS*	**472409** !
44124	*TROS*	473437
44124	*VIC*	226020
44124	*VIC*	60X80X8 !
4412475	*CHRYS*	331228H
44125	*TROS*	450124 =
4412522	*CHRYS*	3459
4412522AB	*CHRYS*	3459
441260C91	*IH*	370150A
441260C91	*IH*	**417158** !
44127	*TROS*	**471735**
4412836	*CHRYS*	**471539**
44128S	*TROS*	450129
44128S	*TROS*	**472826** !
44129	*TROS*	**412920** !
441298R91	*IH*	**471267** !
4412990	*CHRYS*	**472572**
44130	*TROS*	**450133**
44131	*TROS*	**471192**
44132S	*TROS*	**471192**
44133	*TROS*	**470625** !
44134S	*TROS*	**470625** !
44135	*TROS*	**471529**
44136	*TROS*	**473459**
44137S	*TROS*	**473459**
44138	*TROS*	**472234**
44142	*TROS*	**473226**
44143	*TROS*	**473460**
44145	*TROS*	450147
44146	*TROS*	**473463**
44147	*TROS*	40769S
44147	*VIC*	1020
44148	*TROS*	**471750** !
44148	*VIC*	**472258**
44149	*TROS*	**472560N** !
44150	*TROS*	**473205**
44151	*TROS*	**472287** !
441515C1	*IH*	472635
44152	*TROS*	**473234**
44152	*VIC*	**472572** !
44153	*TROS*	**473447**
44154	*TROS*	350156
44154	*TROS*	**473096**
44155	*TROS*	**471760**
44156S	*TROS*	**471760**
44157	*TROS*	**471762** !
44158	*TROS*	450159
44158	*VIC*	**471787** !
44159	*TROS*	**471763**
441595	*WHITE*	**412473** !
4415B	*JN-MN*	**415379**
4415B	*JN-MN*	**415379** !
44160	*TROS*	**471764** !
44161	*TROS*	**471765** !
44162	*TROS*	**471766** !
44163S	*TROS*	**471766** !
44164	*TROS*	**473424** !
44165	*TROS*	450165
44165	*TROS*	**471801** !
44166	*TROS*	**473212** !
44168	*TROS*	**473214**
4416B	*JN-MN*	**470606** !
44170	*TROS*	**473016** !
44171	*TROS*	**473016** !
44171S	*TROS*	**473016** !
44173	*TROS*	450177
44174	*VIC*	223005
44174	*VIC*	30X40X7 !
44174S	*TROS*	415146 !
44174S	*TROS*	**415991**
44175	*TROS*	**473421**
44176	*TROS*	**471747** !
44177	*TROS*	**472179**
44178S	*TROS*	**472179**
44179	*TROS*	**471571**
441790	*WHITE*	**472015** !

! Industrial Size/Type * Minor Width Difference

= The U.S. customer service number is 877-4-TIMKEN. The Canadian customer service numbers are 800-565-4927 (English) and 800-565-0438 (French-Canadian).

Mfr. No.	Name	Zero Duplication or Recommended Industrial
44180	TROS	473229
44181	TROS	473236!
44182	TROS	471619!
44183	TROS	450188
44184	TROS	471692!
44185	TROS	410190
44186	TROS	50191
44187	TROS	473473
44189	TROS	473010
4418LA	JN-MN	470950!
4418LA	JN-MN	6241S
44190S	TROS	473010
44192	TROS	471103!
44193S	TROS	471103!
44195	TROS	50199S!
44195	TROS	6863S!
44196S	TROS	50199S!
44196S	TROS	6863S!
44197	TROS	320457
441989	WHITE	330385!
44199	TROS	472705!
44199	VIC	2551
441SZ70	MACK	5M466
44200S	TROS	472705!
44201	TROS	481443!
44202S	TROS	481443!
44203	TROS	471231!
44204	TROS	471579
44205	VIC	471192
44206	VIC	70X90X10!
44207	TROS	451583!
44208S	TROS	451583!
44209	TROS	50209
442096	WHITE	471553!
44210	TROS	480210!
44212	TROS	481644
44212	VIC	1110
442128	SPG	6815
44213	TROS	471645
44214	TROS	473414
44215	TROS	471646!
44216	TROS	471648
44217	TROS	471649!
442177	GMC	6270
44218	TROS	481650
44219	TROS	471651
44220	TROS	471684!
44222	TROS	471686
442224	SPG	40154S
44224	TROS	470590
44226	TROS	472951
44226	TROS	474252
44227	TROS	471688
442270	NATL	412920
44228	TROS	471689!
44229S	TROS	471689!
44230	TROS	471705!
44231	TROS	471705!
44231	VIC	471224!
44232	TROS	471733
44234	TROS	470712!
44235S	TROS	470712!
44236	TROS	471744!
442369	WHITE	330385
44237	TROS	450342
44237	VIC	1209
44238	TROS	471785!
44239	TROS	471787!
4423B	JN-MN	471766!
44240	TROS	471795
4424059	CHRYS	223801!
44241	TROS	473211!
44242	TROS	473211!
44243	TROS	473436
44243	VIC	1165
44244	VIC	1195
44245	TROS	50254=
44247	TROS	450260
44248	TROS	470682
44249S	TROS	470682
44250	C-R	55199=
44250	TROS	451469
44251	C-R	55199=
44251	WAUKE	450165
44251	WAUKE	471801!
44252	TROS	473235!
44253	TROS	50266
44254	TROS	473451!
44255	GARLK	416556!
44255	GARLK	472157
44255	TROS	450269
44255	VIC	450269
44256	TROS	471866!
44258	TROS	471868
44259	TROS	450273
44263	TROS	450279
44266	TROS	473179!
44267	TROS	450285
442671C1	IH	415027!
442671C1	IH	415027
44268	TROS	474274
44269	C-R	7354N
44271	TROS	470334!
44271	TROS	50289
44272	TROS	471141!
44273	TROS	473453
44275	C-R	457295*
44275	TROS	472144!
44276	TROS	473239
44277	C-R	457295
44277	TROS	472394
44278S	TROS	472394
44279	TROS	472397!
44280	TROS	472012
44281	TROS	472015!
44282S	TROS	472015!
44283	TROS	473457!
44285	TROS	473461!
44286	TROS	450307
442862	WHITE	450472!
44287	TROS	410308!
44288	TROS	471391!
44289	TROS	473242
4428B	JN-MN	471820*
4429	CLIN	471267!
44290	TROS	450311
44291	TROS	472016
44293	TROS	473245!
4429353	CHRYS	39803
44294	TROS	472636!
4429410	CHRYS	39805
44295	C-R	417525
44295	TROS	411394!
44296	C-R	417525
44297	GARLK	416891!
44297	TROS	481163!
44298	TROS	473475
44299	TROS	412040
44300	TROS	472029
44301	TROS	413478
44302	ALLCH	476838!
44303	SPICE	418028
44303	TROS	450326
44304	TROS	50327
44305	TROS	470328
44305	TROS	481213!
44306	TROS	412871!
44307	TROS	470605!
44308	TROS	450332
44309	TROS	470334!
44310	C-R	110X130X12
44310	TROS	474255
44311	TROS	450339
443126C1	IH	415379!
44313	TROS	450341
44314	TROS	450343
44315	TROS	50345=
44316	TROS	474254
44317	TROS	413247!
443174	WHITE	416892!
44317C	DIA	470625!
44318	TROS	471504!
44319S	TROS	471504!
4431BX8	SPG	9316
4431RR8	SPG	9316
4431VJ8	SPG	719316
4431VJ8	SPG	9316
4431VJO	SPG	719316
44320	C-R	417526
44320	TROS	472164!
44321	C-R	417526
44321S	TROS	472164!
44322	TROS	470354
44323	TROS	471538!
44324	TROS	474278!
44325	TROS	473231
44326S	TROS	473231
44327	TROS	473448
44328	TROS	471870!
44329	TROS	472193!
44330	TROS	450362
44331	TROS	350364
44335	TROS	411500
44336	GMC	471224!
44336	TROS	471652
44337	TROS	474276!
44338	TROS	330385!
44339	TROS	472492!
44340	TROS	473407
44341	TROS	473227
44342S	TROS	473227
44344	TROS	450400
44345	TROS	352541
44346	TROS	470774!
44347S	TROS	470774!
44349	TROS	50405
4434RR8	SPG	5778
443508	WHITE	473203
44351	TROS	470409!
44351	TROS	50409
44352	TROS	471424!
44353	TROS	450412
44354	TROS	353132
44355	TROS	450415
44356	TROS	473442!
44358	TROS	450765!
44360	TROS	471730
44362	TROS	450430
44363	TROS	471539!
44364	TROS	471138!
44366	TROS	350435
44367	TROS	471341!
44368S	TROS	471341!
44369	TROS	471835!
44370S	TROS	471835!
44371	TROS	50445
44372	TROS	450446
44374	TROS	471270!
44375	TROS	480630!
44376	TROS	473197
44377	TROS	473224!
44378	TROS	450456!
44379	TROS	450457
44380	TROS	473440!
44381	TROS	50462
443814	WHITE	471192
44382	TROS	450463
44383	TROS	450467
44384	TROS	50468
44385	TROS	481537
44386	TROS	472810!
44387S	TROS	472810!
44388	TROS	450472!
44389	TROS	450474
4439	SPG	2000
4439	SPG	224235
4439	SPG	42X58X7!
44390	TROS	471344
44393	TROS	473445
44394	TROS	323138!
44395	TROS	471818
44396	GMC	471442!
44396	TROS	450482
44398	TROS	411330!
44400	TROS	50490=
44401	TROS	480491
444020	KEN	415027!
444020	KEN	415027
44403	TROS	472164!
44404	TROS	410496!
44405	TROS	450497=
44406	TROS	50501
44407	TROS	474260
44408	TROS	450503=
44409	TROS	472843
44410S	TROS	472843
44412	TROS	470506!
44413	TROS	50514
44415	TROS	450516
44417	TROS	471271!
44418	TROS	471272!
44419S	TROS	471272!
44420	TROS	473423
44421S	TROS	473423
44422	TROS	472258!
44423S	TROS	472258!
44424	TROS	450523
44425	TROS	410524
44426	TROS	471887
44427S	TROS	474276!
44428	TROS	50528
44429	TROS	450984
44430	TROS	470530!
44431	TROS	450532
44432	TROS	450533
44432408	TROS	455249!
44433	TROS	450535
44433	TROS	471264!
44434	TROS	450536
44434	TROS	471535!
44436	TROS	414268!
44438	TROS	471689!
44439	TROS	474272
44440	TROS	450545
444409C1	IH	43290S
44441	TROS	470625!
44442	TROS	472150
44443	TROS	470565!

! Industrial Size/Type * Minor Width Difference

= The U.S. customer service number is 877-4-TIMKEN. The Canadian customer service numbers are 800-565-4927 (English) and 800-565-0438 (French-Canadian).

Mfr. No.	Name	Zero Duplication or Recommended Industrial
44444	TROS	471224!
444456	HYST	351487
44445S	TROS	471224!
44446	TROS	471808!
44447	TROS	50560
44448	TROS	471267!
44449S	TROS	471267!
44450	HYST	415294!
44450	TROS	412027
44451	TROS	413246
44452	HYST	473460
44453	HYST	417562
44454	HYST	417474
44454	TROS	450588
44455	GARLK	416888!
44455	HYST	50501
44456	HYST	351487
44457	HYST	417254
44457	TROS	470596
44458	HYST	473242
44459	HYST	417205!
44459	TROS	450604
4445B	JN-MN	415995!
44460	HYST	416666
44460S	TROS	450604
44461	HYST	417254
44461	TROS	470390
4446143	FORD	240733
44463	HYST	50081
4446411	CHRYS	710046
4446452	FORD	471271=
44465	TROS	450621
44466	TROS	470625!
44467S	TROS	413248
44468	HYST	415146!
44468	HYST	415991
44468	TROS	473420
44469	HYST	416229
4446A	HERCU	472394
44470	C-R	55501=
44470	HYST	416404!
44470	TROS	50631
44471	HYST	473367
44471	TROS	471276
44472	HYST	416282
44472	TROS	472475
44473	TROS	450639
44475	HYST	471413!
44475	TROS	470645
44476	HYST	345448
44476	TROS	481073
44477	HYST	473232!
44478	HYST	455079!
44478	TROS	450655=
44479	HYST	416664!
4447A	HERCU	473232
44480	HYST	473367!
44480	HYST	473367
44480S	TROS	472020
44481	HYST	470530!
44481	TROS	471737
44482	HYST	472179
44482	TROS	410737!
44483	HYST	240736
44484	HYST	416154!
44484	TROS	474279N
44485S	TROS	472018
44486	HYST	411253!
44486	TROS	471984
44487	HYST	415146!
44487	HYST	415991
44487	TROS	473240!
44489	HYST	415867
44489	TROS	410737!
44490	HYST	415023
44490	TROS	471862
44491	HYST	471271!
44491	TROS	470764!
44491	TROS	50764
44492	HYST	472924!
44493	HYST	455375=
44493	TROS	471633!
44494	TROS	471195!
44495	HYST	472144!
44496	HYST	470898
44496	TROS	480889
44497	HYST	471766!
44497	TROS	450803
44498	GARLK	416892!
44498	HYST	471271!
44498S	TROS	470806
44499	HYST	473435
44499	TROS	450808
444GC1110	MACK	473117N=
44500	HYST	40520S
44501	HYST	417181!
44501	TROS	473380
44502	TROS	450819
44503	HYST	472164!
44504	HYST	455509
44504S	TROS	470898
44505	DANA	710413
44505	HYST	6270
44505	SPICE	710413
44505	TROS	473203
44506	DANA	710414
44506	SPICE	710414
44506	TROS	450869
44507	HYST	40555
44507	HYST	40555S!
44507	TROS	50883=
44508	HYST	365008
44509	HYST	45827S
44510	HYST	450400
44511	TROS	413479
44512	HYST	415449!
44513	HYST	415995!
44513	TROS	473237!
44514	HYST	473475
44515	HYST	451948
44515S	TROS	471736
44517	HYST	240735
44517S	TROS	471646!
44518	HYST	470764!
44518	HYST	50764
44519	HYST	55386
44519S	TROS	471564
4451B	JN-MN	417349
44520	HYST	470565!
44521	HYST	416404!
44521	TROS	410987!
44522	HYST	415551
44522	TROS	473474
44523	HYST	472150
44523S	TROS	480630!
44524	TROS	474256
44525	HYST	415072
44526	HYST	416865!
44526	TROS	472185!
44527	HYST	417601
44528	HYST	415482
44529	HYST	472397!
4452SH	JN-MN	455194*
44530	HYST	415302
44530S	TROS	481443!
44531	HYST	240733
445312C1	IH	5112
445312C1	IH	5112S
445319C1	IH	3404!
44532	HYST	240731
44533	HERCU	240119
44533	HYST	240119
44533	TROS	481792
44534	HYST	473413
44534S	TROS	471571
44535	HYST	416271!
44535S	TROS	451078!
44536	HYST	416775
44537	HYST	471413!
44537	MINNM	415449!
44537	OLIVE	415449!
44537	TROS	471413
44538	HYST	6270
44538S	TROS	472213
44539	HYST	5401
44540	HYST	411330!
44540	TROS	481568!
44542	HYST	200851
44542	TROS	482253
44544S	TROS	473243
44545O	IH	473463
44546	HYST	411330!
44546	TROS	451948
44547	HYST	417507
44547	HYST	417507!
44547	TROS	473244
44548	HYST	415027
44548	HYST	415027!
44548	TROS	474253
44549S	TROS	471570!
4454E	GOODM	416107!
4454E	GOODM	455073
44551S	TROS	481073
44552	HYST	411253!
44552S	TROS	451143
44553	HYST	415725!
44553S	TROS	473405
44554	HYST	471633!
44554S	TROS	471570!
44555	HYST	350974!
44555	TROS	473228
44556	AMC	473459
44556	HYST	7105S
44556S	TROS	473466
44557	HYST	415960!
44557S	TROS	410308!
44558	HYST	200752
44558	TROS	470898
44559	HYST	410737!
44559	TROS	472354!
44560	HYST	417298
44560	TROS	450398
44560	TROS	471267!
44561	HYST	417501
44561S	TROS	471270!
44562	HYST	474272
44562S	TROS	480630!
44563	HYST	415960
44563S	TROS	323138!
44564S	TROS	470565!
44565	HYST	416077
44566	HYST	470625!
44566	TROS	471224!
44567	HYST	472164!
44567S	TROS	450911N!
44568	HYST	470565!
44568S	TROS	471652
44568S	TROS	482208!
44569	HYST	416107!
44569	HYST	455073
44569S	TROS	472560N!
4456B	JN-MN	470328
4456B	JN-MN	481213!
4456D5	WHITE	470565!
44570	HYST	416666
44570S	TROS	471141!
44571S	TROS	471354!
44575TA	TRSCM	417525
4457B	JN-MN	471750!
44587	TROS	323138!
44589	AMC	471141!
4458B	JN-MN	470712!
4458VGR	SPG	472324
4459B	JN-MN	473231
446	C-R	473452
4460B	JN-MN	473474
44625	GARLK	415138!
44626	GRAY	470334!
4462RX	SPG	4462N
4463B	JN-MN	415025
4463LPD	JN-MN	415025
4463LUP	JN-MN	415025*
44645	GARLK	417247!
446479C1	IH	415379!
4464B	JN-MN	417485
446508C1	IH	3894V
446510A	HARWA	44X65X10!
4465B	JN-MN	472179
4465LUP	JN-MN	472179
446GC1112	MACK	471354=
446GC1113	MACK	471354=
446GC1115	MACK	417433$
446GC1115	MACK	5609
446GC1116	MACK	417433=
446GC112	MACK	471354=
446GC1127	MACK	417082=
446GC1204	MACK	473117N=
446GC132	MACK	471267!
446GC148	MACK	425RR
446GC155	MACK	425RR
446GC181	MACK	100494
446GC181	MACK	476470!
446GC2116	MACK	904229
446GC218	MACK	39807
446GC235	MACK	5645
446GC235B	MACK	4165V=
446GC238	MACK	2297V!
446GC264	MACK	417433
446GC310	MACK	39807
446GC310P11	MACK	39807
446GC310P2	MACK	417433
446GC312	MACK	BS40446
446GC313	MACK	924404
446GC317	MACK	39920
446GC321	MACK	471255
446GCA310P2	MACK	5609
446GCA310PZ	MACK	5609
446GCX157	MACK	471354=
446GCX169	MACK	471224!
44701	WAUKE	471267!
4470365	AMC	PSK-1
4470B	JN-MN	415058
4470VD	SPG	416404!
44711	VIC	474260
44716	AMC	473467!
447290	WHITE	5494
447291A	COC	7376=
447291A	WHITE	7376=

! Industrial Size/Type * Minor Width Difference $ F-M Number Is Part Of A Kit
= The U.S. customer service number is 877-4-TIMKEN. The Canadian customer service numbers are 800-565-4927 (English) and 800-565-0438 (French-Canadian).

Mfr. No.	Name	Zero Duplication or Recommended Industrial
447292	*WHITE*	7378
4472B	*JN-MN*	**417298**
4473B	*JN-MN*	**417606***
4474B	*JN-MN*	**416154!***
447551C91	*IH*	370036A
447551C91	*IH*	370349A
447559C91	*IH*	370007A
447560C91	*IH*	370008A
447561C91	*IH*	370001A
447565C91	*IH*	370033A
447566C91	*IH*	370023A
4475B	*JN-MN*	**418028**
4475B	*JN-MN*	455137!
4476B	*JN-MN*	**456105**
44774	*AMC*	**470530!**
4477B	*JN-MN*	**476470**
44793	*GMC*	**471705!**
4482	*ALOY*	2081
4482	*ALOY*	**416921!***
448236C1	*IH*	**415035**
44830810	*TROS*	**416024**
44833210	*TROS*	**415437**
44834010	*TROS*	**415937!**
4483456	*CHRYS*	5106
44834807.75	*TROS*	**415379**
44834807.75	*TROS*	**415379!**
44834807.75C	*TROS*	**415379!**
44834808	*TROS*	**415379!**
44834808	*TROS*	**415379**
44834810	*TROS*	**415379**
44834810	*TROS*	**415379!**
44834814	*TROS*	**415379**
44835610	*TROS*	**417210!**
4485	*ALOY*	8974S
4485691	*AMC*	8549S
4485B	*JN-MN*	**415234!***
4486	*GRAY*	**473464!**
4486	*GRAY*	**473464**
4486111	*CHRYS*	710501
4486140	*AMC*	313842
4486141	*AMC*	474131
448644C91	*IH*	370131A
4487B	*JN-MN*	**417210!**
4488330	*AMC*	**480821!**
44895	*DANA*	5778V
4489VAO	*SPG*	713750
4489VX	*SPG*	4489V=
4489VX	*SPG*	713750
4489VXO	*SPG*	714489
4489VXR	*SPG*	4489V=
4489VXR	*SPG*	713750
448A32809	*TROS*	**455858**
448WL316-M1	*C-R*	**415991**
448WL316-M1	*C-R*	455146!
44900	*VIC*	1110
44908	*VIC*	1110
4490B	*JN-MN*	55532=
44912	*C-R*	**327303!**
44913	*C-R*	**327303**
44915	*C-R*	**327303**
44916	*C-R*	**417507**
4491713	*TEREL*	**415379**
4491713	*TEREL*	**415379!**
44919	*C-R*	370124A
4491B	*JN-MN*	**417601**
44920	*C-R*	**417530**
44922	*C-R*	370124A
449228	*C-R*	**455144**
449230	*C-R*	**455356**
44924	*C-R*	370124A
4493	*C-R*	**415088**
4493	*C-R*	**415088!**
44930	*C-R*	**416888!**
449310	*C-R*	**415085!**
449310	*C-R*	456648
449312	*C-R*	**417191**
449312	*C-R*	455165!
449312M1	*C-R*	**417191**
449312M1	*C-R*	455165!
449313	*WHITE*	5494$
449314	*C-R*	**417492***
449316	*C-R*	**415991**
449316	*C-R*	455146!
449316M1	*C-R*	**415991**
449316M1	*C-R*	455146!
449316Q6	*C-R*	**415991**
449316Q6	*C-R*	455146!
449318	*C-R*	**415498**
449318M1	*C-R*	**415498**
44932	*C-R*	55141
449320	*C-R*	**415389**
449322	*C-R*	**416919**
44934	*C-R*	**417172**
44934M1	*C-R*	**417172**
44936	*C-R*	**455336**
44936M1	*C-R*	**455336**
44938	*C-R*	**418028**
44938	*C-R*	455137!
44938M1	*C-R*	**418028**
44938M1	*C-R*	455137!
4493M1	*C-R*	**415088**
4493M1	*C-R*	**415088!**
4494	*UNIVE*	5452
449425M1	*MASSE*	JV933
44952	*C-R*	**416888!**
44959	*C-R*	**416888!**
4496	*ALOY*	8792S
44960	*C-R*	**416888!**
44963	*C-R*	**416888**
44964	*C-R*	**416888**
44966	*C-R*	**416888**
44967	*C-R*	**416888!**
44967	*C-R*	**416888***
44968	*C-R*	**416888!***
44969	*C-R*	**416888!**
4496B	*JN-MN*	**415036**
44970	*C-R*	**416888!**
44971	*C-R*	**416888!**
44972	*C-R*	**416888!**
44973	*C-R*	**416888=**
44975	*C-R*	**416888!**
44975	*WAYNE*	**471730**
44976	*C-R*	**416888!**
4498	*ALOY*	8835S
4499	*ALOY*	8460N
4499B	*JN-MN*	**470565!***
449BM318-L	*C-R*	**415498***
449F314	*C-R*	**417492**
449F316	*C-R*	**415991**
449FM314	*C-R*	**417492**
449FM316	*C-R*	**415991!**
449FM316	*C-R*	**415991**
449FM38	*C-R*	**418028**
449W312-M1	*C-R*	**417191**
449W312-M1	*C-R*	455165!
449W34	*C-R*	**417172**
44G	*OSHKO*	**415960!**
44X60X10SC	*TRSCM*	44X60X10!
44X60X10TC	*TRSCM*	44X60X10!
44X62X8SC	*TRSCM*	44X62X8!
44X62X8TC	*TRSCM*	44X62X8!
44X65X10	*SIMRT*	44X65X10!
44X65X10SC	*TRSCM*	44X65X10!
44X65X10TC	*TRSCM*	44X65X10!
44X72X10SC	*TRSCM*	44X72X10!
44X72X10TC	*TRSCM*	44X72X10!
4500	*GOODM*	**416154!**
45000	*TROS*	**417073**
450005	*NATL*	**471526**
450006	*SPG*	**471530**
450007	*NATL*	**471281!**
450008	*NATL*	**471532**
45001	*TROS*	**415001!**
450010	*C-R*	J712
450014	*NATL*	**471472**
450016	*SPG*	**471535!**
450017	*SPG*	**473405**
450018	*NATL*	**471264**
450019	*NATL*	**471549!**
45002	*TROS*	**415988**
450021	*NATL*	**471551!**
450022	*SPG*	**471558**
450024	*SPG*	**481073**
4500266	*TW-CO*	6465
450027	*NATL*	**471554**
450027SSR	*SPG*	**471554!**
45003	*TROS*	**415458**
4500305	*ALLCH*	**416888!**
4500307	*ALLCH*	**472439**
4500309	*ALLCH*	**471442!**
450033	*NATL*	470033
450034	*NATL*	**474273**
450035	*SPG*	473412
450037	*NATL*	**471137**
450039	*NATL*	**450039**
45004	*NATL*	46997S
45004	*TROS*	46997S
450041	*NATL*	**450593**
450042	*TW-CO*	6465
450045	*NATL*	**476838**
450046	*SPG*	473428
450047	*NATL*	**473426**
450049	*NATL*	**471750**
45005	*TROS*	**417316!**
450050	*SPG*	470050
4500504	*ALLCH*	**416888!**
450051	*NATL*	**473427**
450052	*NATL*	**471354!**
450055	*NATL*	**473215!**
450055N	*NATL*	**473215**
450057	*NATL*	**473225!**
450058	*SPG*	**473438**
45006	*TROS*	**455005**
450061	*NATL*	470950!
450061	*NATL*	6241S
450062	*NATL*	**474264**
450063	*NATL*	**471820**
450064	*NATL*	**471821**
450066	*NATL*	**473367**
45007	*TROS*	**417344!**
450071	*NATL*	**472439**
450072	*SPG*	**481864**
450074	*SPG*	**474265**
450077	*NATL*	**474281!**
450080	*SPG*	**473446**
450084	*NATL*	**450084=**
450086	*SPG*	470086
450088	*NATL*	**470088**
45008S	*TROS*	**417344!**
45009	*TROS*	**415007**
450092	*NATL*	**473458!**
450093B	*SPG*	712130
450094B	*SPG*	712131
450094RAR	*SPG*	**473462**
450097	*NATL*	**413469!**
450098	*NATL*	**412943**
45010	*C-R*	**416888**
45010	*TROS*	**455008**
450100	*NATL*	**410694!**
450102	*NATL*	**410102**
450109	*SPG*	**473441**
45011	*SPG*	43086S
450118	*NATL*	**473449!**
45011D	*IH*	**472924!**
45012	*TROS*	**417485**
450122	*SPG*	473437
450127	*SPG*	**471735**
450129	*NATL*	**472826**
45013	*SPG*	45013S
45013	*TROS*	**415995!**
450136	*NATL*	**470625!***
450137	*NATL*	**471529**
450138	*NATL*	**473459**
450139	*NATL*	**472234**
45014	*TROS*	**416654!**
450140	*NATL*	**471413!**
4501424	*ALLCH*	**416888!**
450144	*NATL*	**473226**
450145	*NATL*	**473460**
4501458	*ALLCH*	**471765!**
4501459	*ALLCH*	**473426**
4501464	*ALLCH*	**471466!**
45015	*TROS*	**415995!**
450152	*NATL*	**473205!**
450153	*SPG*	**472287!**
450155	*C-R*	**471760**
450155	*NATL*	**473447**
450157	*SPG*	**471760**
450158	*NATL*	**471762!**
450160	*NATL*	**471763**
450162	*NATL*	**471765**
450163	*NATL*	**471766**
450164	*SPG*	**473424!**
450167	*SPG*	**473212!**
450169	*NATL*	**473214**
4501690659AM	*CHALL*	370020A
45016S	*TROS*	**415995!**
45017	*TROS*	**417487**
450171	*NATL*	**473016!**
450179	*SPG*	**473421**
45018	*TROS*	**473467**
450180	*SPG*	473435
450182	*NATL*	**471747!**
450184	*NATL*	**471571**
450185	*WMG*	6828S
450186	*NATL*	**473236!**
450187	*NATL*	**471619!**
450189	*NATL*	**471692**
45019	*TROS*	**416288!**
450190	*SPG*	**410190**
45020	*TROS*	**456105**
450202	*NATL*	**472705!**
450203	*SPG*	**481443!**
450205	*SPG*	**471579**
450208	*NATL*	**451583!**
45021	*TROS*	**476470**
450210	*SPG*	**480210!**
450211	*NATL*	**471643**
450213	*SPG*	**471645**
450215	*NATL*	**471646**
450217	*SPG*	**471647**
450218	*SPG*	**471648**
450219	*NATL*	**471649**
45022	*TROS*	**455019!**
450221	*SPG*	**471651**
450222	*NATL*	**471684!**
450224	*SPG*	471686
450226	*NATL*	**470590**

! Industrial Size/Type * Minor Width Difference $ F-M Number Is Part Of A Kit
= The U.S. customer service number is 877-4-TIMKEN. The Canadian customer service numbers are 800-565-4927 (English) and 800-565-0438 (French-Canadian).

Mfr. No.	Name	Zero Duplication or Recommended Industrial
450228	SPG	472951
450228	SPG	**474252**
450229	SPG	**471688**
450230	C-R	**455356***
450230	CABOT	**455356**
450230	NATL	**471689**
450230M1	C-R	**455356***
450232	NATL	**471705!**
450233	NATL	**471733**
450236	NATL	**470712**
450237	WMG	**471744!**
450239	SPG	**450342**
45024	TROS	**415021**
450245	NATL	**471795**
450247	NATL	**473211!**
450248	NATL	473436
45025	C-R	355200*
45025	C-R	**416888!***
45025	TROS	455022
450255	SPG	**473439!**
450258	NATL	**482253**
45026	TROS	**415023**
450261	SPG	**473466**
450262	NATL	**470682**
450265	NATL	**473235!**
450267	NATL	**472070**
450268	SPG	473451!
45027	TROS	455024
450270	SPG	**471866!**
450272	SPG	**471868**
45028	TROS	**415025**
450283	SPG	**473179!**
450284	C-R	733067
450286	NATL	**474274**
450287	C-R	733067
45029	TROS	**455026**
450290	C-R	733067
450293	C-R	733067
450293	SPG	473453
450295	NATL	**472144!**
4502B	JN-MN	450532*
4503	C-R	**415088**
4503	C-R	**415088!**
45030	GARLK	**415725!**
450300	NATL	**472394**
450302	C-R	730022
450302	NATL	**472012**
450304	SPG	**473457!**
450306	NATL	**473461!**
450309	NATL	**471391!**
450310	SPG	**473242**
450312	C-R	**417191**
450312	C-R	455165!
450312	GR-DV	**417191**
450312	GR-DV	455165!
450312N	NATL	**472016**
450314	C-R	**417492**
450314	CABOT	**417492**
450314	FAIRB	**417492**
450314M1	C-R	**417492**
450315	NATL	**473245!**
450316	C-R	**415991**
450316	C-R	455146!
450316	GOODM	**415991**
450316	GOODM	455146!
450316	MINMA	**415991**
450316	MINMA	455146!
450316G	CLARK	**415991**
450316G	CLARK	455146!
450316M1	C-R	**415991**
450316M1	C-R	455146!
45031K	ALLCH	**417181!**
45032	C-R	**416153!***
450320	NATL	**473475**
450322	NATL	**412040**
450323	SPG	**472029**
450324	SPG	**413478**
45032S	TROS	**415027**
45032S	TROS	**415027!**
45033	TROS	55028
450330	SPG	**470605!**
450331	SPG	**473452**
450336	NATL	**474255**
45034	C-R	**417172***
45034	TROS	**416125!**
450340	NATL	**450340**
450344	SPG	**473425**
45035	TROS	55030
450351	NATL	**471504**
450354	NATL	**470354**
450355	SPG	**471538!**
450358N	NATL	**473231**
450358RRR	SPG	**473231**
450359	NATL	**473448**
45036	C-R	**455336***
45036	TROS	**416339**
45036	TROS	455031!
450360	NATL	**471870!**
45036M1	C-R	**455336***
45037	TROS	**471570!**
450373	NATL	**451948**
450374	NATL	**411500**
45038	C-R	**418028**
45038	C-R	455137!
45038	GOODM	**418028**
45038	GOODM	455137!
45038	TROS	**416345!**
45038	TROS	455033
450381	NATL	**471652**
4503830	ALLCH	**416888!**
45039	TROS	**415034!**
4503M1	C-R	**415088!**
4503M1	C-R	**415088**
45040	C-R	**416153!**
45040	TROS	**415035**
45040	TROS	**415035!**
450403	NATL	**470774**
45041	C-R	**416153!**
450414	SPG	**472311!**
450418	SPG	**473442!**
45041S	TROS	**415035**
45041S	TROS	**415035!**
45042	TROS	**415036**
450421	C-R	733067
450424	SPG	**471730**
450433	NATL	**471138!**
450434	C-R	B299
450438	NATL	**472299**
45043S	TROS	**415036**
45044	C-R	**416153!**
45044	TROS	455037
450449	NATL	**471270!**
45045	C-R	**416153!**
45045	TROS	**417512**
450451	NATL	**480630**
450453	NATL	**473224!**
450454	C-R	730149
450455	NATL	**472319**
450456	NATL	323125
45046	C-R	**416153!**
45046	TROS	417513
450464	C-R	730031
450466	C-R	730016
450467	C-R	730001
450468	C-R	730019
45047	C-R	**416153!**
45047	TROS	**416891!**
450470	C-R	730027
450471	C-R	733067
450472	NATL	7751H
4504729	ALLCH	**415449!**
450479	NATL	**473445**
450479	WMG	**472810!**
45048	TROS	**415041**
450481	SPG	**471818**
450482	C-R	730034
450487	NATL	**470487!**
450489	C-R	730001
45049	TROS	**415138!**
4504939	ALLCH	**470898!**
450495	C-R	730035
450496	C-R	730017
450496VGR	SPG	450496V
450497	C-R	730004
450498	C-R	730030
450499	C-R	730003
45050	TROS	**415043**
450502	C-R	730009
450503	NATL	470503
450504	SPG	**472843**
450505	C-R	730009
4505098	CHRYS	**471539**
45051	TROS	**417514**
450519SGR	SPG	**471271**
45051S	TROS	**415035!**
45051S	TROS	**415035**
45052	TROS	**415045!**
450520	NATL	**471272!**
450521	SPG	**473423**
450522	NATL	**472258!**
450524	SPG	**410524**
45053	TROS	**417520**
45054	TROS	**415047**
450541	NATL	**471689**
450543	NATL	**474272!**
4505469	CHRYS	**472572**
450549	NATL	**471744!**
45055	TROS	**417525**
450551	SPG	**472150**
450552	NATL	**470565!**
450553	NATL	**471224**
450559	SPG	**471808!**
45056	TROS	**416892!**
450565	SPG	**470565!**
45057	TROS	**417533**
450571	NATL	**412027**
450574	NATL	**413246**
450574N	WMG	480574H
45058	TROS	**415371**
450580	SPG	**471498**
450584	C-R	733067
450587	C-R	733067
45059	TROS	**415138!**
450590	C-R	733067
450591	SPG	471729
450593	C-R	733067
450596	C-R	730018
450596	SPG	**470596**
4505961	CHRYS	3816
450599	C-R	730026
45060	TROS	**417223**
4506005	CHRYS	710241
4506005AB	CHRYS	710241
450602	C-R	730022
450604	NATL	**450604**
450605	SPG	**470605!**
450606	C-R	730008
45061	AMC	**473444**
45061	C-R	**416892!**
45061	TROS	455056
450610	SPG	**470390**
45062	C-R	**416892!**
45062	TROS	417516
450628	SPG	**473420**
45063	TROS	**415058**
45064	TROS	**417238**
450645	NATL	470645
450649	SPG	**481073**
45065	C-R	**416892!**
45065	TROS	415060
45065	TROS	455060
45066	C-R	**416892!**
45067	TROS	**415351!**
4506725	ALLCH	**472439**
45068	TROS	457585
450680	WMG	**471570!**
450681	SPG	472020
450683	SPG	**471737**
45069	C-R	**416892!***
45069	TROS	417536
45070	C-R	**416892!**
45070	TROS	**415066**
45071	TROS	456890
450718	SPG	**472018**
450719	NATL	**471984**
45072	C-R	**416892!**
45072	TROS	**417269!**
450720	SPG	**473240!**
45073	TROS	**417273**
450737N	NATL	**410737!**
45073D	IH	**417344!**
45074	C-R	**416892!**
45074	TROS	**416865!**
450741	C-R	730003
450742	C-R	730026
450743	C-R	730149
450745	C-R	733067
450746	C-R	730018
450746	NATL	**471862**
450747	C-R	733067
450748	C-R	730016
450749	C-R	730001
45075	C-R	**416892!**
45075	TROS	**417546!**
450751	C-R	733067
450751	SPG	**471316**
450752	C-R	730030
450755	C-R	730004
450756	C-R	730020
450757	C-R	730031
45076	TROS	**415072**
450760	C-R	730005
450765	C-R	730008
450765	NATL	50421
450766	C-R	730034
450768	C-R	730027
450769	C-R	730022
45077	C-R	**416892!**
45077	TROS	**416107!**
450777	TROS	455073
450771	C-R	730007
450772	C-R	730006
450774	C-R	733067
450774	SPG	**470774!**
450775	C-R	733067
450776	NATL	**450776**
450777	C-R	730009
450778	C-R	730019

! Industrial Size/Type * Minor Width Difference

NUMERICAL INTERCHANGE

Mfr. No.	Name	Zero Duplication or Recommended Industrial
450779	C-R	730017
450779	SPG	**473238**!
45078	C-R	**416892**!
450780	C-R	730033
450780	SPG	**481397**
450781	C-R	730149
450781	SPG	**471633**!
450788	C-R	733067
45078S	TROS	**416107**!
45078S	TROS	455073
45079	C-R	**416892**!
45079	TROS	**415074**
450791	SPG	**471466**!
450791S36	SPG	**471466**!
45080	GARLK	**416865**!
45080	TROS	**416476**!
450804	C-R	730005
450805	C-R	730006
450806	C-R	730004
450806	NATL	**470806**
450808	NATL	470808
45081	TROS	**415076**
450818	SPG	**473380**
45082	TROS	**415077**
450823	SPG	**473454**
45083	TROS	55078S
45084	TROS	**455079**!
45085	C-R	**416892**!
45085	TROS	**455080**
45086	TROS	**415082**
450867	WMG	**470898**
450868	NATL	**473203**
45087	TROS	**416239**!
4508700	CALI	**417486**
45088	TROS	**415085**!
45088	TROS	456648
45089	TROS	**417487**
450895	NATL	**471554**
45090	TROS	55087=
450904	SPG	413479
450911N	NATL	**450911N**
450911SSR	SPG	**450911N**!
45092	TROS	**415090**
450929	NATL	**473237**!
45093	C-R	370021A
45093	C-R	380131A
45093	C-R	**417506**
45093	TROS	**416167**!
45094	TROS	**417596**
450948	SPG	**471736**
45095	C-R	370124A
45095	C-R	380069A
45095	C-R	**416892**
45096	TROS	**411376**!
45096S	TROS	**411376**!
45097	C-R	**416892**
45097	TROS	**416444**
450975	SPG	**471564**
45098	C-R	**416892**
45098	TROS	**416271**!
450988	NATL	**473474**
45099	C-R	**416892**
45099D	IH	**450593**!
45099S	TROS	**416271**!
450A312	C-R	**417191**
450A316	C-R	**415991**
450A316	C-R	**415991**!
450AM316	C-R	**415991**
450AM316	C-R	**415991**!
450AMM316	C-R	**415991**!
450AMM316	C-R	**415991**
450B318	C-R	**415498***
450CP312-M1	C-R	**417191**
450CP312-M1	C-R	456585
450F38	C-R	**418028**
450FF316	C-R	345146*
450G316	C-R	345146
450HD316	C-R	345146
450HD326	C-R	8370S
450N38	C-R	415137!
450N38	C-R	**418028**
450TA840	OSHKO	100495
450TA840	OSHKO	476023N
450W230	C-R	**455356***
450W230-M1	C-R	**455356**
450W3	C-R	**415088**!
450W3	C-R	**415088**
450W312	C-R	**417191**
450W312	C-R	455165!
450W314	C-R	**417492**
450W316	C-R	**415991**
450W316	C-R	455146!
450W316-M1	C-R	**415991**
450W316-M1	C-R	455146!
450W34	C-R	**417172***
450W36	C-R	6358
450W38	C-R	**418028**
450W38	C-R	455137!
450W38-M1	C-R	**418028**
450W38-M1	C-R	455137!
4510	ALOY	7934S
45100	C-R	380131A
45100	C-R	**416892**
45100	TROS	**411245**!
45100D	IH	**480210**!
4510113	JOY	7700S!
4510141	JOY	**415458**!
451016	SPG	**473517**!
45101S	TROS	**411245**!
45102	C-R	370131A
45102	C-R	380131A
45102	TROS	**415302**
451024	NATL	**471653**
45103	C-R	370131A
45103	C-R	380131A
45103	TROS	**416282**
45104	C-R	417531
45104	TROS	**415645**!
45104	TROS	455104
45104D	IH	**415960**
45105	C-R	370131A
45105	C-R	380131A
45105	C-R	**416892**
45105	TROS	**415938**
451060	SPG	**481792**
45106S	TROS	**415938**
45107	C-R	417531
451078	NATL	**451078**=
45108	C-R	**416892**
45108	TROS	**416666**
45109	C-R	**416154**!
45109	TROS	**457874**
451091	SPG	**473463**
45110	C-R	**416154**!
45110	TROS	**417562**
451100	NATL	**471652**
4511035	WOOL	**417158**!
45111	C-R	**416154**!
45111	TROS	**417563**
45112	TROS	**416229**
45113	TROS	**417298**
451138	SPG	**471138**!
45114	TROS	455310
45115	TROS	**455584**
45116	TROS	**416077**
451162N	NATL	**473454**
45117	TROS	**415116**
45118	TROS	**455117**
45119	TROS	**415551**
451198	SPG	**470774**!
45120	TROS	**417598**
45121	TROS	**455406**!
45121L	C-R	5797
45122	TROS	**455121**
45123	TROS	**417602**!
451235	SPG	**471958**
45124	TROS	**455123**
45125	TROS	**415124**
4512559	ALLCH	**416888**
45126	TROS	**417022**
45127	TROS	**417604**
451271	SPG	**471271**!
451272	SPG	**471272**!
451275RA	SPG	**476470**!
45128	TROS	**417567**
45129	TROS	**415128**
451294	SPG	**471526**!
45130	GARLK	**417278**
45130	TROS	455129
45131	TROS	**417474**
45132	TROS	**455134**!
451324	SPG	**471255**!
45133	TROS	455136
45134	TROS	**418028**
45134	TROS	455137!
45134D	IH	**415449**!
45135S	TROS	**418028**
45135S	TROS	455137!
45136	TROS	**417554**!
4513621	ALLCH	**472439**
45136215	ALLCH	**472439**
45137	TROS	55141
45138	TROS	**415142**
451385	SPG	473407
45139	TROS	**455144**
45140	C-R	**416070**
45140	TROS	**417172**
45141	TROS	**415991**
45141	TROS	455146!
451414	SPG	**412473**!
451424	ALLCH	**416888**!
45142S	TROS	**415991**
45142S	TROS	455146!
45143	TROS	**415449**!
451446	WHITE	**480630**
45144S	TROS	**415449**!
45145	TROS	**417366**!
451456	NATL	**472475**
451458	ALLCH	**471765**!
451459	ALLCH	**473426**
45146	TROS	**417343**!
451464	ALLCH	**471466**!
45147	TROS	**415150**!
45148	C-R	**415351**!
45148	TROS	**455151**
4514813	ALLCH	J1238=
45149	C-R	**415351**!
45149	TROS	**417134**
4515	ALOY	7537S
4515	JOHND	**412119**
45150	C-R	**415351**!
45150	TROS	**417486**
45151	C-R	**415351**!
45151	TROS	**417351**!
45152	C-R	370086A
45152	TROS	55155=
45153	TROS	**417621**!
451531	SPG	**471281**!
45155	C-R	**417532**
45155	TROS	**416292**
45157	C-R	370011A
45157S	TROS	**417488**!
45158	C-R	370021A
45158	TROS	**417171**!
451580	SPG	**471567**!
451583	NATL	**451583**
45159	TROS	417490
45160	C-R	370021A
45160	TROS	**417181**!
45161	TROS	**417491**
45162	C-R	370192A
45162	TROS	**412473**!
45163	TROS	**417191**
45163	TROS	455165!
45164	TROS	**417492**
45165	TROS	**417354**!
45166	TROS	**417493**
451662	NATL	**471649**!
45167	TROS	**417196**!
45168	TROS	**415711**
45169	TROS	**416332**!
45170	TROS	**415437**
45170	TROS	**415437**!
451700	SPG	**470590**
451703	SPG	**471689**!
451706	SPG	**471692**!
451709	NATL	**471413**
45171	TROS	417497
45172	TROS	**415937**!
45173	TROS	**417501**
45174	TROS	**415379**!
45174	TROS	**415379**
45175	TROS	455178=
45176	TROS	**417210**!
45177	TROS	417498
45178	C-R	55539*=
45178	TROS	**417355**!
4517LA	JN-MN	**472439***
45180	C-R	55539=
45180	TROS	**417205**!
45182	TROS	**417211**!
45183	TROS	**417967**!
45184	TROS	**415187**
45185	TROS	**417356**!
45185	TROS	455188
451858	SPG	451469
45186	TROS	**455191**
45187	SPG	45187S
451879	SPG	**470334**!
45188	TROS	55193=
451883	SPG	**471870**!
45189	TROS	**455194**
4518H	MALL	**471413**
45190	TROS	**472157**
45190	TROS	**472157**!
45191	TROS	**415196**!
45192	TROS	455197N
45193	TROS	**415196**!
451936	SPG	**473238**
45194	TROS	55199=
451944	SPG	**472924**!
451948	NATL	472579
45195	TROS	**416888**!
45196	TROS	**417509**
45197	TROS	455203
45199	TROS	**416137**
4519LA	JN-MN	**416888**!
4519LUP	JN-MN	**416888**!

! Industrial Size/Type * Minor Width Difference

= The U.S. customer service number is 877-4-TIMKEN. The Canadian customer service numbers are 800-565-4927 (English) and 800-565-0438 (French-Canadian).

Mfr. No.	Name	Zero Duplication or Recommended Industrial
4520	*DURA*	**330385**!
45201	*TROS*	**416149**
452018	*SPG*	**472018**
45202	*TROS*	417526
452020	*SPG*	472020
45203	*TROS*	**416154**!
45205	*TROS*	**416158**
45206	*TROS*	417535
45207	*TROS*	**417247**!
45208	*TROS*	416163
45209	*TROS*	**417539**!
45210	*C-R*	115X135X15!*
45210	*C-R*	710258
45210	*TROS*	417267
45212	*TROS*	**415219**
45213	*TROS*	415871
45215	*TROS*	55222=
452152	*SPG*	**411394**!
45216	*TROS*	55223=
452164N	*NATL*	**472164**!
45217	*TROS*	55224=
45218	*TROS*	**417020**
45219	*TROS*	**415227**!
45220	*C-R*	115X140X12
45220	*TROS*	55228=
45220S	*TROS*	5487
45221	*TROS*	**415482**
45222	*C-R*	115X140X12V
45222	*TROS*	**416153**!
452222	*NATL*	**452222**=
45223	*C-R*	115X140X12!
45223	*TROS*	**417538**
45224	*TROS*	**415234**!
45225	*C-R*	115X140X12!*
45225	*TROS*	55236
45226	*TROS*	55238
452267	*NATL*	482267
45228	*TROS*	55242
45229	*TROS*	**417481**
45230	*C-R*	115X145X13!*
45230	*C-R*	115X145X15*
45231	*TROS*	**416919**
45233	*C-R*	115X145X14!
45233	*TROS*	**412861**
45234	*TROS*	**455249**!
45235	*TROS*	**415303**!
45236	*TROS*	455251H
45237S	*TROS*	455251H
45238	*TROS*	**455253**
45238	*VIC*	5414
45239	*TROS*	**415254**
45239	*VIC*	5414
4524	*ALOY*	7412S
45240	*TROS*	**417198**
45242	*TROS*	**417252**
452424C1	*IH*	100495
452424C1	*IH*	476023N
45243	*TROS*	**415259**!
45244	*TROS*	**455260**
45247	*TROS*	**415263**
45248	*TROS*	**415867**
45249	*TROS*	**416865**!
45250	*C-R*	115X150X12
45252	*C-R*	115X150X12!
45252	*TROS*	55268
45254	*TROS*	**417605**
45255	*TROS*	**415725**!
452554	*NATL*	**474276**
452559	*SPG*	**472475**
45256	*TROS*	**416706**!
45257	*TROS*	**417254**
45259	*TROS*	55276=
45259	*VIC*	5453
45259VJ	*SPG*	4525V
4525VJ0	*SPG*	4525V
45261	*TROS*	**455280**
45262	*TROS*	**417349**
45263	*TROS*	**416364**!
45263	*VIC*	5458
452636	*SPG*	**472636**!
45264	*TROS*	**416865**!
45265	*TROS*	**417602**!
45266	*TROS*	455290
45268	*TROS*	417584
45269	*TROS*	**415294**!
45270S	*TROS*	**415294**!
45271	*TROS*	**415295**
45272	*TROS*	**417082**
45273	*TROS*	**455297**
45274	*TROS*	**417600**
45275	*TROS*	**417601**
45276	*TROS*	**55301S**
45277	*TROS*	**476470**
45278	*TROS*	**415991**
45278	*TROS*	455146!
45279	*TROS*	455308
4528	*SPG*	1174
4528	*SPG*	38X52X8.5!
45280	*C-R*	710372
45280	*TROS*	55309=
45281	*TROS*	455310
45282	*TROS*	455311
45283	*TROS*	**417278**
45285	*TROS*	**415984**!
452867R91	*IH*	40059S
45287	*C-R*	100X130X12!
45287	*TROS*	415317
45288	*TROS*	**417542**
45289	*TROS*	**417495**
45290	*C-R*	115X160X15*
45290	*TROS*	455321
45291	*TROS*	**417484**!
45292	*TROS*	**417532**
452920	*SPG*	**412920**!
45296	*TROS*	**455330**!
45297	*TROS*	**417191**
45297	*TROS*	456585
45298	*TROS*	55333=
45300	*TROS*	**455336**
45301	*TROS*	55337
45302	*TROS*	**415991**
45302	*TROS*	455146!
45304	*TROS*	417494
453062	*SPG*	**472644**
45307	*ALLCH*	**472439**
45308	*TROS*	**417159**
45309	*ALLCH*	**471442**!
45309	*TROS*	**415349**
45310	*GARLK*	**417262**!
45310	*TROS*	**415350**
45311	*TROS*	55353
45312	*TROS*	**416404**!
4531216AB	*CHRYS*	7300S
4531225	*CHRYS*	331227H
45313	*TROS*	**416404**!
45314S	*TROS*	**416404**!
45315	*TROS*	**455356**
453157	*WHITE*	733111
453166	*NATL*	**350974**!
453169	*SPG*	**473224**!
45317	*TROS*	55357
453170	*SPG*	**473016**!
453171	*SPG*	**473440**
45318	*TROS*	55358=
453181	*SPG*	**415995**!
453181	*SPG*	**415995**!
45319	*TROS*	**416865**
45320	*TROS*	**417362**!
45321	*TROS*	**415284**
45321S	*TROS*	**417362**!
45322	*TROS*	**416664**!
45323S	*TROS*	**416664**!
45324	*TROS*	**327303**!
453244	*SPG*	**473244**!
453245	*SPG*	**473245**!
453246	*SPG*	**413246**
453247	*SPG*	**413247**!
453248	*SPG*	**413248**
45326	*TROS*	55367=
45327	*TROS*	**415483**!
45328S	*TROS*	**415483**!
45329	*TROS*	417537
45330	*TROS*	455375=
45331	*TROS*	**417541**
45332	*TROS*	**415284**
45333S	*TROS*	**415284**
45334	*TROS*	**415379**!
45334	*TROS*	**415379**
45335S	*TROS*	**415379**
45335S	*TROS*	**415379**!
45337	*TROS*	**416956**
45338S	*TROS*	**416956**
45339	*TROS*	**475384**
45340	*TROS*	55386
45341	*TROS*	**415389**
45343	*TROS*	55392=
45344	*TROS*	**417511**
45345	*TROS*	**415394**
45346	*TROS*	**417549**!
45347	*TROS*	**455396**
45348	*TROS*	455397
45349	*TROS*	455402=
4534B	*JN-MN*	**470764**!
4534B	*JN-MN*	50764
45350	*GARLK*	**417358**
45350	*TROS*	**417551**
45352	*TROS*	**417492**
45354	*TROS*	55431=
45355	*TROS*	**455434**
45357	*TROS*	**415437**
45358	*TROS*	55441=
45359	*TROS*	**415442**!
45359	*TROS*	55442
45361	*TROS*	**415447**
45362	*TROS*	**417597**
45363	*TROS*	**455576**!
45364	*TROS*	**455462**
45366	*TROS*	55469
45367	*TROS*	**455471**
45368	*TROS*	455472=
45369	*TROS*	**417518**
45371	*TROS*	455476
45372	*TROS*	**417350**!
45373	*TROS*	**455480**!
45374S	*TROS*	**455480**!
45375	*TROS*	417543
45376	*TROS*	**415482**
45378S	*TROS*	**415937**!
45379	*TROS*	**417555**!
45381	*TROS*	417548
45382S	*TROS*	417548
45383	*TROS*	**415498**
453830	*ALLCH*	**416888**!
45383A	*HERCU*	45637S
45384S	*TROS*	**415498**
45385	*TROS*	**418029**!
45386	*TROS*	**455500**
45387	*TROS*	55501=
45388	*TROS*	**455583N**!
45390	*TROS*	455509
45392	*TROS*	**416130**!
45393	*TROS*	**417507**!
45393	*TROS*	**417507**
45394S	*TROS*	**417507**!
45394S	*TROS*	**417507**
45396	*TROS*	55524
45397	*TROS*	55532=
45399	*TROS*	55539=
453996R91	*IH*	**473426**
45400	*GARLK*	**415645**!
45401	*TROS*	**415697**!
45401	*TROS*	455547
45402S	*TROS*	**415697**!
45402S	*TROS*	455547
45403	*TROS*	55548
45404	*TROS*	455556
45405	*TROS*	**415559**
45406	*TROS*	**417433**
45407	*TROS*	**455566**
45408S	*TROS*	**417506**
45409S	*TROS*	**455576**!
45410	*TROS*	**415577**
45412	*TROS*	456618
454136RRR	*SPG*	454136N
45415	*TROS*	**416070**
45418	*TROS*	55611=
45419	*TROS*	455612=
45420	*TROS*	**416294**!
45421	*TROS*	455614
45422	*TROS*	**416024**
45425	*TROS*	**415371**
45426	*TROS*	55646=
45429	*TROS*	**455655**!
45432	*TROS*	**412473**!
45433	*TROS*	**415683**
45433214	*TROS*	370001A
45434	*TROS*	455685
45436	*TROS*	55692=
45437S	*TROS*	**416364**!
45440	*TROS*	**416071**
45443	*TROS*	455820
45445	*TROS*	**410825**
45448	*TROS*	**417604**
45449	*TROS*	**455858**
45450	*GARLK*	417359
45450S	*TROS*	**415379**!
45451	*TROS*	**417550**
45452S	*TROS*	**415458**
45453	*TROS*	**415960**
45454	*TROS*	**416921**!
45455	*TROS*	**411376**!
45456	*TROS*	**415027**!
45456	*TROS*	**415027**
45457	*TROS*	**417556**
45458S	*TROS*	**417621**!
45459	*TROS*	**417488**!
45460	*TROS*	**417357**
45460	*TROS*	455192!
45461	*TROS*	**417606**
45462	*TROS*	6985
45463	*TROS*	41081S=
45465	*TROS*	6864S
45466S	*TROS*	370019A
45467	*TROS*	**417570**
454704C1	*IH*	710007
454705C1	*IH*	711553
454706C1	*IH*	710006
454707C91	*IH*	**410987**!

! Industrial Size/Type * Minor Width Difference

= The U.S. customer service number is 877-4-TIMKEN. The Canadian customer service numbers are 800-565-4927 (English) and 800-565-0438 (French-Canadian).

Mfr. No.	Name	Zero Duplication or Recommended Industrial
454707C91	IH	450686
45471	TROS	416102
454729	ALLCH	**415449**!
45472S	TROS	**416288**!
45473S	TROS	**416865**!
454755C1	IH	711553
45475S	TROS	**455189**
45476S	TROS	**415196**!
45477S	TROS	**416153**!
45478	TROS	**417484**!
45478S	TROS	**417484**!
4548RPD	JN-MN	55316*=
455000	NATL	**417073**
455001	C-R	AR5
455002	NATL	**415988**
455007	NATL	**415007**
455016	NATL	**416288**!
455017	NATL	**456105**
455019	NATL	**455019**=
455021	SPG	**415021**
455023	SPG	**415023**
455024	C-R	AR22
455025	NATL	**415025**
455026C1	IH	**471224**!
455029	NATL	**416125**!
455031	C-R	AR12
455032	NATL	**455032**
455034	C-R	AR10!
455035460	WMG	**415035**
455036	NATL	**415036**
455039	SPG	417513
45504	ALLCH	**416888**!
455040	NATL	**416891**!
455040	SPG	**416891**!
455041	NATL	**415041**
455044	SPG	**417514**
455045	SPG	**415045**!
455046	SPG	**417520**
455047	SPG	**415047**
455049	NATL	**416892**!
455053	NATL	**415138**!
455054	NATL	**417223**
455054SSR	SPG	**417223**
455057	SPG	417516
455058	NATL	**415058**
455059	SPG	**417238**
455060	NATL	370019A
455064	SPG	415064
455065	SPG	417536
455066	SPG	**415066**
455069	SPG	**417273**
455070N	NATL	**416865**
455071	NATL	**417546**!
455072	NATL	**415072**
455074	SPG	**415074**
455079	NATL	**455079**=
455079	NATL	55079
455082	NATL	**415082**
455082	WMG	**415082**
455084	NATL	**416239**!
455090	SPG	**415090**
455094	NATL	**416444**
455095	NATL	**416271**!
455098	NATL	**415302**
4550A	DIA	**471689**!
4550A	HERCU	**471689**!
4550B	JN-MN	**417621**!
455105	NATL	**415938**
455106	NATL	**417556**
455107	NATL	**416666**
455107	SPG	**416666**
455109	C-R	AR20
455109	NATL	**417562**
455111	NATL	**416229**
455111SSR	SPG	**416229**
455114	SPG	**455584**
455121VGR	SPG	**455121**
455122	SPG	**417602**!
455126	SPG	**417604**
455128	SPG	**415128**
455130	SPG	**417474**
455134	NATL	**455134**=
455137	NATL	**416888**
455138	SPG	**415138**!
455140	SPG	**417554**!
455142	SPG	**415142**
455145	NATL	**417172**
455148	SPG	**417366**!
455149	SPG	**417343**!
455150	NATL	**415150**!
455152	SPG	**417134**
455153	NATL	**417486**
455156	NATL	**417621**!
455158	NATL	**417488**!
455160	SPG	**417171**!
455161	SPG	417490
455162	NATL	**417181**!
455162	SPG	**417181**!
455163	SPG	**417491**
455164	SPG	**412473**!
455164S	SPG	**412473**!
455164S60	SPG	**412473**!
455166	SPG	**417492**
455168	SPG	**417354**!
455170	NATL	**417196**!
455172	NATL	**416332**!
455172N	NATL	**416332**!
455172N	NATL	455172
455174	SPG	417497
455175	SPG	**415937**!
455177	NATL	**415379**!
455177	NATL	**415379**
455181	SPG	**417355**!
455183	NATL	**417205**!
455183	SPG	**417205**!
455185	NATL	**417211**!
455186	NATL	**417967**!
455186	NATL	**417967**=
455196	NATL	**415196**!
455197	SPG	455197N
455197SSR	SPG	455197
455200	NATL	**416888**
455200SSR	SPG	**416888**!
455201	SPG	**417509**
455204	SPG	417515
455205	SPG	**416137**
455206	SPG	416144
455207	SPG	**416149**
455208	CLARK	**474278**!
455209	SPG	**416154**!
45521	HYST	**473226**
455211	NATL	**416158**
455212	SPG	417535
455213	NATL	**417247**!
455214	CLARK	**471570**!
455214	SPG	416163
455217	SPG	417267
455219	SPG	**415219**
455225	SPG	**417020**
455233	SPG	**417538**
455234	NATL	**415234**!
455244	NATL	**417481**
455245	SPG	**416024**
455247	SPG	417540
455248	SPG	**412861**
455249	NATL	**455249**
45525	SPG	45525S
455250	SPG	**415303**!
455254	SPG	**415254**
455255	SPG	**417198**
455258	SPG	**417252**
455258R91	IH	41013S
455259	SPG	**415259**!
455262	SPG	**417496**
455263	NATL	**415263**
455265	SPG	**456305**
455270	SPG	**417605**
455271	NATL	**415725**!
455273	SPG	**417254**
455281	NATL	**417349**
455282	NATL	**416364**!
455295	SPG	**415295**
455296	SPG	**417082**
455299	SPG	**417600**
455300	NATL	**417601**
455301SSR	SPG	**55301S**
455303	SPG	**415303**!
455304	SPG	**476470**
455309	CLARK	**472179**
45531	SPG	45031S
455312	SPG	**417278**
455315	NATL	**415984**!
455318	SPG	**417542**
455319	SPG	**417495**
45531S	SPG	45031S
455325	SPG	**417532**
455330	NATL	**455330**=
455341	SPG	417494
455342	SPG	417531
455347	NATL	**417159**
45534TA	TRSCM	**417530**
455350	SPG	**415350**
455354	NATL	**416404**!
455370	SPG	417537
455371	NATL	**415371**
455377	NATL	**417541**
455378	NATL	**415284**
455379V	NATL	3893V
455380	SPG	**410825**
455383	NATL	**416956**
455389	SPG	**415389**
455393	SPG	**417511**
455394	SPG	**415394**
455395	SPG	**417549**!
4553B	JN-MN	**473245**!
455406	NATL	**455406**=
455421	SPG	417564
455423	SPG	417503
455437	NATL	**415437**
455437N	NATL	**415437**
455437RRR	SPG	**415437**
455446R91	IH	**413469**!
455447	NATL	**415447**
455447R91	IH	**470088**
455448R91	IH	**471795**
455449	NATL	**415449**!
455449R91	IH	**450593**!
455450R91	IH	**473463**
455451R91	IH	**471466**!
455452	SPG	**417597**
455452R91	IH	**481443**!
455453R91	IH	**471827**!
455458	SPG	**415458**!
455460	SPG	**417545**
455461	SPG	**455576**!
455464	SPG	**417550**
455473	NATL	**417518**
455479	WMG	**417350**!
455480	NATL	**455480**=
455480V	SPG	**455480**
455483	SPG	**415483**
455486	SPG	**415937**!
455487	SPG	**417555**!
455489	SPG	**417603**!
455495	SPG	417547
455498	SPG	**415498**
45550	C-R	**417533**
455500	NATL	**455500**
455502	SPG	**455583N**!
45551	C-R	**417533**
455511	NATL	2081
455512	SPG	**416130**!
455513SSR	SPG	**417507**
455513SSR	SPG	**417507**!
455517	SPG	**416364**!
45554S	TROS	**471570**!
45555	TROS	**473228**
455551	NATL	**415551**
455559	SPG	**415559**
45555TA	TRSCM	**416888**!
455575	SPG	**417506**
455576	NATL	**455576**=
455577	SPG	**415577**
455583N	NATL	**455583N**
455583SSR	SPG	**455583N**!
45560	C-R	457585!
455601	SPG	**416070**
455613	SPG	**416294**!
455615	NATL	**418028**
455615	NATL	455137!
455618	SPG	416029N!
45561D	IH	**470530**!
455645	SPG	**415645**!
45564SA	TRSCM	**416153**
455655	NATL	**455655**=
455659	SPG	**416267**!
455685	NATL	370131A
455697	SPG	**415697**!
455699	SPG	**416364**!
455725	SPG	**415725**!
455728	SPG	**416071**
455807A	HARWA	45X58X7!
455824	SPG	**417258**
455828V	SPG	455828V
455832	SPG	415832
455836	SPG	**415995**!
455836	SPG	**415995**!
455854	SPG	**415854**
455861	SPG	6635S
455867V	SPG	**415867**
45587	HYST	**471354**!
455871	SPG	415871
455872	SPG	**457291**
455894	SPG	**412473**!
4558B	JN-MN	**417600***
455937	SPG	**415937**!
455953	NATL	**415035**
455953	NATL	**415035**!
455953	WMG	**415035**!
455960	SPG	**415960**
455963H	NATL	**415379**!
455963H	SPG	**415379**!
455984	SPG	**415984**!
455D6	WHITE	6635S
45600	C-R	417534
456011	SPG	**417621**!
456026	SPG	**417487**
456026	SPG	**417487**!

! Industrial Size/Type * Minor Width Difference

= The U.S. customer service number is 877-4-TIMKEN. The Canadian customer service numbers are 800-565-4927 (English) and 800-565-0438 (French-Canadian).

Mfr. No.	Name	Zero Duplication or Recommended Industrial
456041	*SPG*	416041
456047	*SPG*	**416332**!
456055VG0	*SPG*	456055
4560719	*MERCE*	140X160X13!
456107	*SPG*	**416107**!
456125	*SPG*	**416125**!
456130	*SPG*	**416130**!
456135	*SPG*	**416135**!
456174	*SPG*	**417551**
456197	*CLARK*	240119
45620	*GARLK*	**417254**
45621	*HYST*	**473226**
456239	*SPG*	**416239**!
45625SA	*TRSCM*	**415351**!
456271	*SPG*	**416271**!
456273	*SPG*	**416273**
456288	*SPG*	**416288**!
456292	*NATL*	**416292**
456294	*CLARK*	**471267**
456294	*SPG*	**416294**!
4563	*ALOY*	**411330**
456339	*SPG*	**416339**
45634	*C-R*	6644
45634008.5	*TROS*	**417355**!
45634008.5	*TROS*	485497
45634010	*TROS*	**417355**!
456345	*SPG*	**416345**!
456350	*SPG*	**415034**!
45635610	*TROS*	**417211**!
45640004	*TROS*	45187S
456414	*NATL*	**415991**
456414	*NATL*	455146!
45645	*GARLK*	**417247**!
456472RA9	*SPG*	**410825**
456476RAR	*SPG*	**416476**
456493	*WHITE*	**473215**!
456494	*NATL*	**417530**
4564B	*JN-MN*	**418028**
4564B	*JN-MN*	455137!
45650	*GARLK*	**417360**
456500	*PACIF*	**416500**!
45652	*SPICE*	710453
45653	*SPG*	45653S
456556	*SPG*	416556!
456556	*SPG*	**472157**
456618	*NATL*	370023A
456618	*WMG*	370023A
456618-S61	*IH*	370023A
456624	*SPG*	**416624**!
456664	*SPG*	**416664**!
456666	*SPG*	**416666**
45667D	*IH*	**471442**!
45670	*DANA*	**473227**
4567809	*CHRYS*	4889=
4567811	*CHRYS*	4890=
456865	*SPG*	**416865**!
456888	*SPG*	**416888**!
456891	*SPG*	**416891**!
456892	*SPG*	**416892**!
4568R	*JN-MN*	**472150***
4569	*ALOY*	**416273**
456919VGR	*SPG*	**416919**
456921	*SPG*	**416921**!
45699	*C-R*	370006A
45699	*C-R*	380003A
456A34010	*TROS*	**417355**!
456FF2-L	*C-R*	6465
45701K	*TROS*	5401
45702D	*IH*	**473214**
45705	*C-R*	370003A
45705	*C-R*	386025A
45705	*C-R*	**416158**

Mfr. No.	Name	Zero Duplication or Recommended Industrial
457050	*C-R*	370003A
457096V	*SPG*	457096V
45710	*GARLK*	**417361**
457158	*SPG*	**417158**!
457171	*SPG*	**417171**!
457172	*SPG*	**417172**
457181	*SPG*	**417181**!
457191	*SPG*	**417191**
457196	*SPG*	**417196**!
457205	*SPG*	**417205**!
457211	*NATL*	**417211**!
457211	*WMG*	**417211**!
457226	*FMC*	**473232**!
457247	*SPG*	**417247**!
457247R	*SPG*	**417247**=
457254	*SPG*	**417254**
457262	*SPG*	**417262**!
457278	*SPG*	**417278**
45729	*HYST*	**455280**
457297	*SPG*	**417562**
457316	*SPG*	**417316**!
45734	*C-R*	5751
457343	*SPG*	**417343**!
457344	*SPG*	**417344**!
457349	*SPG*	**417349**!
457350	*SPG*	**417350**!
457351	*SPG*	**417351**!
457352	*SPG*	**418028**
457353	*SPG*	**417353**!
457354	*SPG*	**417354**!
457355	*SPG*	**417355**!
457356	*SPG*	**417356**!
457357	*SPG*	**417357**
457358	*SPG*	**417358**
457359	*SPG*	417359
457360	*SPG*	**417360**
457361	*SPG*	**417361**
457362	*SPG*	**417362**!
457363	*SPG*	417363
457364	*SPG*	417364
457365	*SPG*	**417365**
457366	*SPG*	**417366**!
4573927	*CHRYS*	714655
457461	*WHITE*	6513
45750	*C-R*	457585
4576	*DURA*	**476838**!
45788	*VICK*	450545
457FF2-L	*C-R*	6465
4580562	*RCA*	**471571**
4580563	*RCA*	**415379**
4580563	*RCA*	**415379**!
4580566	*RCA*	**470625**!
4580567	*RCA*	**415449**!
458111C1	*IH*	**481181**!
458112C1	*IH*	**412871**!
45816	*EATON*	**415458**!
45825	*SPG*	45825S
45827	*SPG*	45827S
458428	*IH*	**415995**!
45850	*GARLK*	**417362**!
458510A	*HARWA*	45X85X10
4585OS	*JN-MN*	470059
4585OS	*JN-MN*	**470380**!
45866	*SPICE*	710430
4587B	*JN-MN*	**450639***
4587LUP	*JN-MN*	**450639**
458858	*GMC*	8622
458859	*GMC*	8622
45890	*GARLK*	417363
458925R91	*IH*	203006!
4589A	*HERCU*	**473238**
4589EL	*SUL*	**415995**!

Mfr. No.	Name	Zero Duplication or Recommended Industrial
45906	*US-EL*	**415035**!
45906	*US-EL*	**415035**
45910	*GARLK*	**416666**
4592	*ALOY*	6936S
4592	*ALOY*	9845
459243C1	*IH*	**415035**
45925	*GARLK*	417364
4592B	*JN-MN*	481650*
459322	*FWD*	**471554**!
4594B	*JN-MN*	**415697**!
4594B	*JN-MN*	455547
4594EL	*SUL*	**415001**!
4596A	*HERCU*	**471192**
4596EL	*SUL*	**416654**!
4597EL	*SUL*	**417196**!
4598	*ALOY*	7107A=
45X58X7	*SIMRT*	45X58X7!
45X58X7SC	*TRSCM*	45X58X7!
45X58X7TC	*TRSCM*	45X58X7!
45X60X10SC	*TRSCM*	45X60X10!
45X60X10TC	*TRSCM*	45X60X10!
45X60X7AN(35)	*ISP*	45X60X7
45X60X8SC	*TRSCM*	45X60X8
45X60X8TC	*TRSCM*	45X60X8
45X62X8SB	*TRSCM*	1012
45X62X8SB	*TRSCM*	1012N
45X62X8SC	*TRSCM*	45X62X8!
45X62X8TC	*TRSCM*	45X62X8!
45X65X5TB	*TRSCM*	1992
45X65X8SC	*TRSCM*	45X65X8!
45X65X8TC	*TRSCM*	45X65X8!
45X68X7SC	*TRSCM*	45X68X7!
45X68X7TC	*TRSCM*	45X68X7!
45X70X10SC	*TRSCM*	45X70X10
45X70X10TC	*TRSCM*	45X70X10
45X72X10SC	*TRSCM*	45X72X10
45X72X10TC	*TRSCM*	45X72X10
45X72X12SC	*TRSCM*	45X72X12!
45X72X12TC	*TRSCM*	45X72X12!
45X72X7SC	*TRSCM*	45X72X7!
45X72X7TC	*TRSCM*	45X72X7!
45X72X95SC	*TRSCM*	45X72X95
45X72X95TC	*TRSCM*	45X72X95
45X75X7SC	*TRSCM*	45X75X7!
45X75X7TC	*TRSCM*	45X75X7!
45X75X8SB	*TRSCM*	1979
45X80X10SC	*TRSCM*	45X80X10
45X80X10TC	*TRSCM*	45X80X10
45X85X10	*SIMRT*	45X85X10
45X85X10SC	*TRSCM*	45X85X10
45X85X10TC	*TRSCM*	45X85X10
45X85X13SC	*TRSCM*	45X85X13
45X85X13TC	*TRSCM*	45X85X13
460-6001	*STEM*	475003N+99262
460-6002	*STEM*	9773+99262
460-6003	*STEM*	**416500**
460-6004	*STEM*	475322N+99274
460-6005	*STEM*	475009N+99274
460-6006	*STEM*	475012N+99293
460-6007	*STEM*	415013N+99300
460-6008	*STEM*	476283N+99274
460-6009	*STEM*	475458+99262
460-6011	*STEM*	415304+99324!
460-6012	*STEM*	415086N+99300!
460-6013	*STEM*	415004+99274
46000	*VIC*	41081S=
46002	*TROS*	**471192**
46002	*VIC*	6626S
46003	*VIC*	**415302**
46004	*SPICE*	9864S
46006	*VIC*	6636S
46007	*VIC*	**476470**

Mfr. No.	Name	Zero Duplication or Recommended Industrial
46008	*VIC*	6815
46009	*VIC*	**473016**!
46010	*VIC*	**473228**!
46011	*VIC*	**451857**
46012	*VIC*	**474281**!
46013	*VIC*	**472164**!
46013S	*TROS*	75251S
46014	*VIC*	**410308**
46015	*VIC*	**415001**!
46017	*VIC*	**417134**
46018	*VIC*	**450666**
46019	*VIC*	**471195**!
46020	*TROS*	200600
46020	*VIC*	240733
46021	*TROS*	80313
46025	*TROS*	200640
46025	*VIC*	204017
46026	*VIC*	6759S
46027	*VIC*	340413
46028	*VIC*	**473224**!
46030	*GARLK*	**417365**
46030	*VIC*	6952S=
460300R91	*IH*	**471692**!
46032	*VIC*	323119
46033	*TROS*	7208S
46033	*VIC*	7886S
46036	*VIC*	712260
46038	*VIC*	**473226**
46038Q6	*C-R*	**417353**!
46039	*VIC*	1192
46039	*VIC*	**473231**!
46039	*VIC*	**473231**!
46040	*VIC*	**470565**!
46041	*VIC*	7537S
46042	*TROS*	200642
46043	*VIC*	3103!
46044	*VIC*	**451948**
46045	*TROS*	**450040**
46046	*VIC*	470059
46046	*VIC*	**470380**!
46047	*TROS*	**473367**
46047	*VIC*	40185
46048	*TROS*	**473228**!
46048	*VIC*	6960
46049	*VIC*	**471829**
46050	*GARLK*	**415072**
46050PM	*VIC*	**417158**!
46052	*VIC*	415899N
46052	*VIC*	**416624**
46052M4	*VIC*	**416624**
46053	*TROS*	**472287**!
46053	*VIC*	5778
46055	*TROS*	**473010**!
46055	*VIC*	**472560N**!
46057	*VIC*	5589$
46057	*VIC*	6957=
46058	*TROS*	**415449**!
46058	*VIC*	**253099**
46058	*VIC*	**471652**
46058	*VIC*	482208!
46060	*C-R*	710089
46060	*TROS*	**417344**!
46060	*VIC*	6840S
46061	*VIC*	**472015**!
46062	*VIC*	**471829**
46063	*VIC*	**471442**!
46065	*DANA*	710429
46065	*TROS*	**416444**
46065	*VIC*	**473234**!
46066	*DANA*	710428
46068	*TROS*	**415379**
46068	*VIC*	7994S

! Industrial Size/Type * Minor Width Difference $ F-M Number Is Part Of A Kit
= The U.S. customer service number is 877-4-TIMKEN. The Canadian customer service numbers are 800-565-4927 (English) and 800-565-0438 (French-Canadian).

Mfr. No.	Name	Zero Duplication or Recommended Industrial
46070	VIC	**473231**!
46073	VIC	**473224**
46076	VIC	205017
46077	VIC	340771
46078	VIC	**474278**!
46078	VIC	6859S
46080	VIC	**473367**
46080	VIC	**473367**!
46081	VIC	5128N
46084	VIC	**471413**
46085	VIC	710409
46087	VIC	**416273**
46087	VIC	**473367** *
46087	VIC	**473367**
46089	VIC	6808N
46090	VIC	9150S
46091	VIC	**473467**
46093	VIC	7044NA
46095	VIC	324941
46096	VIC	3095
46097	VIC	**473215**!
46098	VIC	9613S
46099	VIC	6985
460W36-Y13	C-R	6358
46100	VIC	6930
4610001	KOEH	**471619**!
46101	TROS	40973S
46102	VIC	**472287**!
4610204	KOEH	470086
46103	VIC	**471689**!
4610309	KOEH	**471341**!
4610314	KOEH	**410825**
4610323	KOEH	55238
46104	VIC	323133
4610400	KOEH	**417549**!
4610401	KOEH	**415047**
4610402	KOEH	**415150**!
4610409	KOEH	**456105**
4610411	KOEH	**415035**!
4610411	KOEH	**415035**
4610413	KOEH	**415066**
4610423	KOEH	**412473**!
4610426	KOEH	**415027**
4610441	KOEH	**417254**
4610502	KOEH	**415072**
4610506	KOEH	**415116**
4610B	JN-MN	**471466**!
46110	VIC	**417621**
4611035	WOOL	**417602**!
46111	VIC	**470954**
46112	VIC	**470487**!
46113	VIC	323126
46113	VIC	**474278**!
4611315	KOEH	**415483**
46114	VIC	**473234**!
4611441	KOEH	**415991**
4611441	KOEH	455146!
4611442	KOEH	**417158**!
46115	VIC	**471553**!
4611502	KOEH	**416364**!
46116	VIC	**470625**!
4611773	ALLCH	**471567**!
46117735	ALLCH	**471567**!
46120	VIC	7018N=
46121	VIC	9568
46122	VIC	44053
46123	VIC	6703S
4612310	KOEH	**412040**
4612319	KOEH	**417484**!
46125	C-R	456641
46125	VIC	**470334**!
46128	VIC	**472287**!
46130	VIC	**473317**
46131	VIC	7686S
461312M1	C-R	**417354**! *
46132	VIC	**472705**!
46133	VIC	**472185**!
46134	VIC	321460
46135	VIC	**417316**!
46136	VIC	**455500**
46140	VIC	410059
46140	VIC	470059
46140	VIC	**470380**!
46140SF	VIC	470059
46141	VIC	**473234**!
46143	VIC	7188S
4614392	ALLCH	**455008**
46144	C-R	**416156**
46144	VIC	**473234**
461449	ALLCH	**472394**
46145	VIC	342805
461456	ALLCH	**472394**
46148	VIC	**474276**!
46149	VIC	**471442**!
46150	C-R	**416156**
46150	VIC	**470605**!
4615166	ALLCH	**471766**!
4615167	ALLCH	**471735**
46153	VIC	5072
46156	VIC	7044NA
46157	VIC	**411253**!
46158	VIC	8362
46159	VIC	5126
46160	VIC	**472164**!
46162	VIC	7216
46163	VIC	**470605**!
461642R91	IH	**471808**!
46165	VIC	**331107N**
4616570	ALLCH	**415041**
46165S	TROS	6626S
46166	VIC	7107A=
46167	TROS	40576S
46167	VIC	7107A=
4616954	ALLCH	**411253**!
4616VJ	SPG	714616
46171	VIC	**323138**!
46172	VIC	**471267**!
46173	VIC	204020
46173	VIC	204505!
46174	VIC	**471763**
46175	VIC	311189
46176	VIC	7412S
46177	VIC	203006!
46179	VIC	40316S
46181	HYST	50528
46181	VIC	**417350**!
46182	VIC	**471652**
461823-P60	IH	JX1120
46183	VIC	**471341**!
46186	VIC	311189
46188	VIC	470328
46188	VIC	**481213**!
46189	VIC	**417343**!
46190	C-R	**415371**
46190	VIC	6906S
46192	VIC	6863S!
46194	VIC	343101
46195	VIC	**471466**!
46196	VIC	**254270**
461964	WHITE	5473
46197	VIC	**471270**!
461970	WHITE	5406
46198	VIC	**471652**
46199	VIC	353135
46199	VIC	**474278**!
4619EL	SUL	**473461**!
461V1502	KOEH	**416364**!
461W316-M1	C-R	**417196**! *
461W316-Y13	C-R	**417196**! *
461W320	C-R	**416332**!
461W320-M1	C-R	**416332**!
461W34	C-R	**416297**
4620	CLIN	340724!
46200	C-R	**415371**
46200	VIC	8139
46201	TROS	6358
46201	VIC	**480630**!
46202	CUSH	**471652**
46202	TROS	**417355**!
46202	TROS	485497
46202	VIC	**352541**
46202M	DIA	5957S
46202S	TROS	**417355**!
46202S	TROS	485497
46203	TROS	2081
46203	VIC	**473214**
46205	VIC	**471195**!
46206	VIC	**472354**!
46208	VIC	5092
46209	VIC	7456N
46210	VIC	**473179**
46211	C-R	**415371**
46211	VIC	**417344**!
46213	VIC	7014S
46214	VIC	**472705**!
46215	VIC	5113
46215	VIC	7721
46217	VIC	**415995**!
46219	VIC	**472572**!
4621939	CHRYS	710056
46220	VIC	**471138**!
46220PH	VIC	**471138**!
46221	C-R	**415371**
462214	C-R	55346
46227	VIC	7338N
462271	VIC	7338N
46230	VIC	**472705**!
46231	VIC	**470712**!
4623109	SCOT	240119
462312	C-R	**417354**!
462312M1	C-R	**417354**!
462314	C-R	**417493**
462314M1	C-R	**417493**
462316	C-R	**417196**!
462316	GOODM	**417196**!
462316	GR-DV	**417196**!
462316M1	C-R	**417196**!
462318	C-R	**415711**
462318M1	C-R	**415711**
462320	C-R	**416332**!
462320	MINMA	**416332**!
462320M1	C-R	**416332**!
46235	VIC	7107A=
46239	VIC	**471267**!
46240	VIC	5113
46240	VIC	7721
46241	TROS	6241S
46241	VIC	342805
46242S	TROS	6241S
46243	VIC	7840S
46244	VIC	**473237**!
46246	VIC	**451182**
46247	VIC	**415995**!
46247	VIC	**415995** *
46248	VIC	7456N
46249	VIC	7235S
4624N	WMG	4624V
4624VX8	SPG	4624V
46250	VIC	**417316**!
46251	VIC	**415449**!
46252	VIC	7537S
46253	VIC	**472287**!
46254	VIC	**473214**
46255	VIC	**450400**
46256	VIC	**471538**
46257	VIC	**473214**!
46258	VIC	7457N
46260	TROS	**472164**!
46260	VIC	**472354**!
46261	VIC	41257!
46263	VIC	313842
4626515	CHRYS	7412S
4626696	CHRYS	**473227**
46268	VIC	**471554**!
46269	VIC	350877
46269	VIC	**471633**!
4626A	HERCU	**471554**!
46270	VIC	**472394**
46271	VIC	8421S
46272	VIC	**473237**!
46274	VIC	**481181**!
46276	C-R	455685
46276	VIC	**472185**=
46277	VIC	3103!
46278	VIC	**471341**!
46279	VIC	**470898**!
46280	VIC	**472560N**
462805	GMC	710304
46281	VIC	**473367**!
462811	GMC	710045
46282	VIC	**352541**
46282D	IH	**452222**!
46283	VIC	**471193**!
462837	WHITE	**412119**
46284	VIC	291295
46285	C-R	**416158**
46285	VIC	7442H
462857	GMC	**470682**
46286	VIC	**415449**!
462864	GMC	9316
46288	VIC	205044
46289	VIC	**473454**
46290	VIC	**480581**
46291	C-R	**416158**
46291	VIC	**416404**!
46292	C-R	**416158**
46292	VIC	470950!
46292	VIC	6241S
46293	VIC	**350936**
46293	VIC	**471854**!
46294	VIC	331301N
46295	C-R	**416158**
46296	VIC	**417316**
46297	VIC	**470530**!
46298	VIC	7934S
462W312-M1	C-R	**417354**!
462W314	C-R	**417493**
462W316	C-R	**417196**!
462W316-M1	C-R	**417196**!
462W38	C-R	**417353**! *
463	KRSE	**417343**!
46300	C-R	380023A
46300	C-R	386025A
46300	C-R	**417505**
46300	VIC	1037
4630121	ALLCH	J1123
46302	VIC	8139
463024	GMC	473546

! Industrial Size/Type * Minor Width Difference

= The U.S. customer service number is 877-4-TIMKEN. The Canadian customer service numbers are 800-565-4927 (English) and 800-565-0438 (French-Canadian).

Mfr. No.	Name	Zero Duplication or Recommended Industrial
4630273	*ALLCH*	415165H=
46303	*VIC*	7607
46304	*C-R*	**416158**
46305	*C-R*	**416158**
46306	*C-R*	**416158**
46306	*VIC*	240119
463064	*GMC*	3543
46307	*VIC*	**471821**!
46307	*VIC*	**471821***
46308	*C-R*	**416158**
46308	*VIC*	**450472**!
46308	*VIC*	7751H
4630820	*ALLCH*	**472492**!
4630856	*ALLCH*	**413247**!
46309	*C-R*	2505
46309	*VIC*	**482253**
46310	*VIC*	**481181**!
46313	*VIC*	**473459**
46314	*VIC*	**472439**
46316	*VIC*	**473235**!
46317	*VIC*	7780
46317-4-22	*IH*	**417433**=
46318	*VIC*	40494S!
46318	*VIC*	**472164**
46319	*VIC*	**417621**!
46320	*VIC*	**472409**!
46321	*VIC*	51322
46322	*VIC*	8243
46323	*VIC*	**471795**
46324	*C-R*	415064*
46324	*VIC*	**473517**!
46325	*VIC*	**472354**!
46326	*VIC*	**417316**!
46327	*VIC*	**473231***
46327	*VIC*	**473231**!
46327	*VIC*	710430
46328	*VIC*	**470380**!
46328	*VIC*	9613S
46328SF	*VIC*	9613S
4633	*SPICE*	**472397**!
46330	*C-R*	415064
46330	*VIC*	**472287**!
46331	*C-R*	415064
46331	*VIC*	**473237**!
46333	*VIC*	**417350**=
46334	*VIC*	323119
46336	*C-R*	415064
46336	*VIC*	340847
46337	*VIC*	340850
46338	*VIC*	240735
46340	*TROS*	**471316**
46340	*VIC*	6863S!
463425R91	*IH*	204017
46343	*VIC*	**471643**!
46344	*VIC*	**471554**!
4634451	*RFT*	713156
46346	*VIC*	**471442**!
46347	*VIC*	**472311**!
46348	*VIC*	**471271**!
46349	*VIC*	**471264**!
46350	*VIC*	**411376**!
46356	*VIC*	8429S
46358	*VIC*	456837V
46359	*VIC*	**470954**!
46361	*VIC*	**411500**
46362	*VIC*	40154S
4636502	*CHRYS*	710198
46366	*VIC*	340847
46368	*VIC*	**473258**!
46368	*VIC*	8168=
46369	*VIC*	8293S
46370	*VIC*	8610
46371	*VIC*	9015S
46372	*VIC*	**413248**!
46373	*VIC*	**470954**!
46374	*VIC*	**410825**!
46374	*VIC*	**410825**!
463748	*GMC*	**415960**
46375	*VIC*	**472070**
46376	*VIC*	**470954**!
46377	*VIC*	**472015**!
4637776	*CHRYS*	714655
46377PM	*VIC*	**472015**!
46378	*VIC*	**415458**!
46379	*VIC*	**415995**!
46379PM	*VIC*	**415995**!
46380	*VIC*	**476470***
46380	*VIC*	**476470**!
46383	*VIC*	**471413**!
46383	*VIC*	7412S
46384	*VIC*	**474281**!
46386	*VIC*	**411253**!
46386SE	*VIC*	**411253**!
46388	*VIC*	**415458**!
4638904	*CHRYS*	4370N
4638904	*CHRYS*	7692S
4638941	*CHRYS*	4370N
46390	*C-R*	370026A
46390	*VIC*	**474276**
46392	*VIC*	331227H
46393	*VIC*	**411348**
46394	*VIC*	312140
46395	*C-R*	6886S
46395	*C-R*	7700S!
46395	*VIC*	**471652**
46396	*C-R*	370051A
46396	*VIC*	**472015**!
46397	*VIC*	9363S
46398	*VIC*	**471538**!
4640	*C-R*	320457*
46400D	*IH*	**450065**
46401	*VIC*	240215
46401D	*IH*	450260
46403	*VIC*	**472082**
46404	*VIC*	8429S
46404094	*FIAT*	713034
46408	*VIC*	5124
46409	*VIC*	7934S
4640B	*JN-MN*	55228*=
4641	*C-R*	320457*
46410	*VIC*	**472258**!
46411	*SPICE*	4525V
46411	*VIC*	351487
46411-1	*SPICE*	4525V
46412	*VIC*	6863S!
4641982	*ALLCH*	**471766**!
46423	*VIC*	**474272***
46423	*VIC*	**474272**!
46424	*VIC*	8974S
464244C1	*IH*	710008
464244C2	*IH*	710008
464260	*WHITE*	**417316**!
46431	*VIC*	**471649**!
46431S	*TROS*	**473179**
46432	*VIC*	**481163**!
46433	*VIC*	9449
46434	*VIC*	9178S
46435	*VIC*	5113
46436	*VIC*	8975S
46438	*VIC*	8660S
46439	*VIC*	8705S
46442	*VIC*	**413246**!
46445	*HYST*	55501=
46447	*VIC*	**471737**
46449	*VIC*	7214
46450	*VIC*	**476838**!
46452	*VIC*	8704S
46453	*VIC*	8974S
46454	*VIC*	**471570**!
46456	*VIC*	8430S
46457	*VIC*	7687S
4646	*C-R*	320457
46460	*VIC*	9195S=
46461	*VIC*	4148
46461	*VIC*	**471424**!
464633	*SPICE*	**471271**!
464634	*SPICE*	**481181**!
464638	*SPICE*	411509V*
464649	*WHITE*	50199S!
464649	*WHITE*	6863S!
46467	*VIC*	3945
46467	*VIC*	4131
46469	*VIC*	**470380**!
46469	*VIC*	472189A
46470	*VIC*	203006!
46471	*VIC*	483054N
46473	*VIC*	9116S
46476	*VIC*	2043
46477	*VIC*	**473228**!
46478	*VIC*	**481163**!
46481	*VIC*	**455151**
46482	*HYST*	**417181**!
46482	*VIC*	8695S
46483	*VIC*	472341!
46485	*DANA*	4857
46485	*SPICE*	4857
46485-1	*DANA*	4857
46485-1	*SPICE*	4857
46486	*VIC*	**470530**!
4648608	*CHRYS*	320249
46487	*VIC*	331301N
46489	*VIC*	**471272**
4648B	*JN-MN*	**471705**!*
464910R91	*IH*	**473317**
46494	*VIC*	3210
464967	*WHITE*	**473460**
4649B	*JN-MN*	450165
4649B	*JN-MN*	**471801**!
4649EL	*SUL*	**473179**!
4650	*C-R*	320457
4650B	*JN-MN*	**416125**!
465155C1	*IH*	**473274**
4651899	*SCOT*	343185
46540	*TROS*	**410308**!
465483	*GMC*	710005
4654F	*GOODM*	**416666**
4655	*C-R*	**470004**
465511C91	*IH*	370131A
465611	*WHITE*	**451583**!
46565TA	*TRSCM*	**416156**
4656F	*GOODM*	**416666**
4658	*C-R*	**470004**
4659	*C-R*	**470004**
4660478	*ALLCH*	**471689**!
466174R91	*IH*	341022
466174R92	*IH*	341022
4661872	*ALLCH*	**473474**
46626	*HYST*	**473234**!
4662VJR	*SPG*	714662
46648	*DANA*	5778V
46648	*SPICE*	5778V
46648	*VIC*	5778V
4664872	*ALLCH*	**473474**
466588	*WHITE*	5408
46661TBY	*TRSCM*	7700S!
46671	*HYST*	**416380**!
4667198	*CHRYS*	320348
4667322	*CHRYS*	710056
46676	*VIC*	**415035**
4667904	*CHRYS*	5279
4667904	*CHRYS*	710056
466809	*WHITE*	6270
466810	*WHITE*	5401
46683	*HYST*	**417254**
466867	*WHITE*	**410825**
46688	*VIC*	**416888**!
46689	*VIC*	**416888**!
46690	*VIC*	**416888**!
46691	*VIC*	**416888**!
46697	*HYST*	**471413**!
4670305	*ALLCH*	**472397**!
467141	*BENDI*	340210
4674B	*JN-MN*	**473238**
46750	*KELSE*	203025
46751	*VIC*	**455583N**!
46752	*VIC*	**415938**
46754	*VIC*	**415725**!
46754	*VIC*	485725H=
46755	*VIC*	6864S
46757	*VIC*	**415379**
467574	*WHITE*	**415960**
46758	*VIC*	327215
46758	*VIC*	**415035**!
46759	*VIC*	415213N
4675VA8	*SPG*	714675
46760	*TROS*	5585
46761	*TROS*	5585
46761	*VIC*	**415284**
46763	*VIC*	**455858**
46765	*VIC*	**476842**
46767	*VIC*	**415027**
46767	*VIC*	**415138**!
46768	*VIC*	**416865**!
46769	*VIC*	456618
46770	*VIC*	**415351**!
46773	*VIC*	39807
46774	*VIC*	**415697**!
46774	*VIC*	455547
46776	*VIC*	**415035**
4677B	*JN-MN*	**471466**!
46780	*VIC*	**416865**!
467807	*WHITE*	5403
467812	*WHITE*	6635S
46782	*VIC*	415213N
46783	*VIC*	**415867**
467836	*WHITE*	733114
46784	*VIC*	**416339**
46784	*VIC*	455031!
46785	*VIC*	**415295**
4678B	*JN-MN*	**473445***
46790	*C-R*	**415284**
46790PM	*VIC*	**416364**!
46791	*VIC*	55532=
46794	*VIC*	**415991**
46795	*VIC*	**416364**!
46795M2	*VIC*	**416364**!
46798	*VIC*	416037=
46799	*VIC*	**417247**!
467F	*OSHKO*	**411253**!
46800	*C-R*	**415284**
46801	*VIC*	**417600**
46802	*VIC*	**415379**!
46803	*VIC*	**418028**
46804	*VIC*	**415035**!
46808	*VIC*	**455948**
46809	*VIC*	**415035**
46810	*C-R*	**415284**
46810	*VIC*	**415035**

! Industrial Size/Type * Minor Width Difference

= The U.S. customer service number is 877-4-TIMKEN. The Canadian customer service numbers are 800-565-4927 (English) and 800-565-0438 (French-Canadian).

Mfr. No.	Name	Zero Duplication or Recommended Industrial
46811	*C-R*	**415284**
46811	*VIC*	**417357**
46811	*VIC*	455192!
46812	*VIC*	**417357**
46813	*VIC*	357302
46813	*VIC*	**415991**
46814	*VIC*	**415379**
46815	*VIC*	**415227**!
46817	*VIC*	**416273**
46817PM	*VIC*	**416125**!
46818	*VIC*	**415035**
46820	*VIC*	**415498**
46829	*VIC*	3492V
46831	*HYST*	**415350**
468312	*C-R*	**455249**!
468312M1	*C-R*	**455249**!
46838	*VIC*	BS15868
46839	*VIC*	**415725**!
4683B	*JN-MN*	**471649**!
46841ST	*VIC*	370065A
46842	*VIC*	370036A >
46842	*VIC*	370349A %
46842ST	*VIC*	370036A
46842ST	*VIC*	370349A
46843	*VIC*	**415284**
46844	*VIC*	455956H
46844	*VIC*	BS40116
46845	*VIC*	370036A
46845	*VIC*	370349A
46846	*VIC*	**415035**!
46847	*VIC*	370037A
46847	*VIC*	370338A
46848	*VIC*	370107A
46849	*VIC*	370027A
4684B	*JN-MN*	**471413**! *
46850	*VIC*	**415958**!
46850	*VIC*	**415958**
46851	*C-R*	**415284**
46865	*C-R*	**415284**
46871	*C-R*	**415284**
46876	*SPERY*	204008
46876	*VICK*	204008
468849	*WHITE*	**473245**!
46886	*SPERY*	340853
46886	*VICK*	340853
46890	*C-R*	417535
468961R91	*IH*	41013S
46898	*BOSTN*	**471442**!
46899	*BOSTN*	**471442**!
468W22-L	*C-R*	6077
46900	*BOSTN*	**471526**!
46901	*BOSTN*	**471526**!
46902	*BOSTN*	**471472**!
46903	*BOSTN*	**471472**!
46904	*BOSTN*	**471466**!
46905	*BOSTN*	**471466**!
46906	*BOSTN*	**471264**!
46907	*BOSTN*	**471264**!
46908	*BOSTN*	**471255**!
46908	*KEN*	J1401 =
46909	*BOSTN*	**471255**!
46910	*BOSTN*	**471564**
46911	*BOSTN*	**471564**
46912	*BOSTN*	**470954**!
46913	*BOSTN*	**470954**!
46914	*BOSTN*	**471554**!
46915	*BOSTN*	**471554**!
46916	*BOSTN*	**471567**!
46917	*BOSTN*	**471567**!
46917D	*IH*	**472397**!
46918	*BOSTN*	**471643**!
46919	*BOSTN*	**471643**!
4691B	*JN-MN*	**415025** *
46920	*BOSTN*	**471267**!
46920	*C-R*	45637S *
46921	*BOSTN*	**471267**!
46922	*BOSTN*	**471570**!
46923	*BOSTN*	**471570**!
46924	*BOSTN*	**471646**!
46925	*BOSTN*	**471646**!
46926	*BOSTN*	**470590**
46927	*BOSTN*	**470590**
46928	*BOSTN*	**471224**!
46929	*BOSTN*	**471224**!
46930	*BOSTN*	**471649**!
46930	*C-R*	45637S *
46931	*BOSTN*	**471649**!
46932	*BOSTN*	**471689**!
46933	*BOSTN*	**471689**!
46934	*BOSTN*	**471733**
46935	*BOSTN*	**471733**
46935	*C-R*	417535
46936	*BOSTN*	**471652**
46936	*BOSTN*	482208!
46937	*BOSTN*	**471652**
46938	*BOSTN*	**471692**!
46939	*BOSTN*	**471692**!
4693B	*JN-MN*	50419
46940	*BOSTN*	**470712**!
46941	*BOSTN*	**470712**!
46942	*BOSTN*	**471763**
46943	*BOSTN*	**471763**
46944	*BOSTN*	**473203**
46945	*BOSTN*	**473203**
46946	*BOSTN*	**472475**
469461	*WHITE*	5471
46947	*BOSTN*	**472475**
46948	*BOSTN*	**471765**!
46949	*BOSTN*	**471765**!
4694B	*JN-MN*	**471649**!
46950	*BOSTN*	**473205**!
46950	*C-R*	417536
46951	*BOSTN*	**473205**!
46952	*BOSTN*	**471413**!
46953	*BOSTN*	**471413**!
46954	*BOSTN*	**471737**
46955	*BOSTN*	**471737**
46956	*BOSTN*	**471766**!
46957	*BOSTN*	**471766**!
46958	*BOSTN*	**471795**
46959	*BOSTN*	**471795**
46960	*BOSTN*	**473210**
46960S	*TROS*	**473229**
46961	*BOSTN*	**473210**
46962	*BOSTN*	**473211**!
46963	*BOSTN*	**473211**!
46964	*BOSTN*	**473212**!
46965	*BOSTN*	**473212**!
46966	*BOSTN*	**473213**!
46967	*BOSTN*	**473213**!
46968	*BOSTN*	**472258**!
46969	*BOSTN*	**472258**!
469694	*GMC*	2081
46970	*BOSTN*	**471192**
46970	*C-R*	417537
46971	*BOSTN*	**471192**
46972	*BOSTN*	**473214**!
46973	*BOSTN*	**473214**!
46974	*BOSTN*	**473215**!
46975	*BOSTN*	**473215**!
46975D	*IH*	**410102**
46976	*BOSTN*	**473224**!
46976D	*IH*	**473215**!
46977	*BOSTN*	**473224**!
46977D	*IH*	**473447**
46978	*BOSTN*	**473016**!
46978D	*IH*	**415995**!
46979	*BOSTN*	**473016**!
46979D	*IH*	**410694**!
4697B	*JN-MN*	**471224**!
46980	*BOSTN*	**473225**
46980D	*IH*	**415991**
46980D	*IH*	455146!
46981	*BOSTN*	**473225**
46982	*BOSTN*	**473226**
46982D	*IH*	**481864**
46983	*BOSTN*	**473226**
469835R91	*IH*	7186S
46983D	*IH*	**412119**!
46984	*BOSTN*	**473227**!
469844C1	*IH*	370150A
469845C1	*IH*	**415437**
46984D	*IH*	**416921**!
46985	*BOSTN*	**473227**!
46986	*BOSTN*	**470625**!
46987	*BOSTN*	**470625**!
46988	*BOSTN*	**470380**!
46989	*BOSTN*	**470380**!
4698B	*JN-MN*	**473238**
46990	*BOSTN*	**473228**!
46991	*BOSTN*	**473228**!
46992	*BOSTN*	**472213**
46993	*BOSTN*	**472213**
46994	*BOSTN*	**472299**
46995	*BOSTN*	**472299**
46996	*BOSTN*	**473229**!
46997	*BOSTN*	**473229**!
46998	*BOSTN*	**470682**
46999	*BOSTN*	**470682**
4699B	*JN-MN*	**417492**
46X65X7SC	*TRSCM*	46X65X7!
46X65X7TC	*TRSCM*	46X65X7!
46X70X8SC	*TRSCM*	46X70X8!
46X70X8TC	*TRSCM*	46X70X8!
47000	*BOSTN*	**473230**!
470004	*NATL*	**470004**
4700052404	*BUSHH*	240462
47000S	*TROS*	240009
47001	*BOSTN*	**473230**!
47001	*VIC*	**474279N**
47001S	*TROS*	203029
47002	*BOSTN*	**473231**!
47002	*VIC*	**471564**
470025SSR	*SPG*	**471553**
47003	*BOSTN*	**473231**!
47003	*VIC*	**471529**
470032SSR	*SPG*	**471570**
470039SSR	*SPG*	**450039**
47004	*BOSTN*	**473010**!
47004	*VIC*	353132
470047	*SPG*	**473426**
470049	*SPG*	**471750**!
47005	*BOSTN*	**473010**!
47005	*VIC*	**471267**!
470052	*SPG*	**471354**!
470055	*SPG*	**473215**!
470059	*NATL*	**470380**!
47005S	*TROS*	**481537**
47006	*BOSTN*	**473232**!
470069	*SPG*	**473232**!
47006S	*TROS*	340771
47007	*BOSTN*	**473232**!
47007	*VIC*	**323138**!
470070	*NATL*	**472185**!
47008	*BOSTN*	**473233**!
47008	*VIC*	**472354**!
470085	*SPG*	**470530**!
470087	*WMG*	**473313**!
47009	*BOSTN*	**473233**!
470094	*NATL*	473451
4701	*C-R*	12X20X5
47010	*BOSTN*	**473234**!
47010	*VIC*	5115
47010S	*TROS*	45637S
47011	*BOSTN*	**473234**!
47011	*TROS*	204008
470115	*SPG*	**473467**
470119	*SPG*	**471442**!
47012	*BOSTN*	**473235**!
47012	*VIC*	**471504**!
470120SSR	*SPG*	**471224**
470121	*SPG*	**472409**!
47012S	*TROS*	203003
47013	*BOSTN*	**473235**!
47013	*VIC*	**450472**!
470135	*SPG*	**471192**
470135SSR	*SPG*	**471192**
470136	*SPG*	**470625**!
47013S	*TROS*	203003
47014	*BOSTN*	**473236**!
47014	*VIC*	**450474**
470140RRR	*SPG*	**471413**
470141	*SPG*	**470954**!
470141SSR	*SPG*	**470954**
47014S	*TROS*	203012
47015	*BOSTN*	**473236**!
47015	*VIC*	**450621**
47015S	*TROS*	203013
47016	*BOSTN*	**473237**!
47016	*VIC*	**471138**!
470162	*SPG*	**471765**!
470165	*SPG*	**471801**!
470169	*SPG*	**473214**!
47016S	*TROS*	203016
47017	*BOSTN*	**473237**!
47017	*VIC*	**412920**!
47017S	*TROS*	203025
47018	*BOSTN*	**472164**!
470189RA	*SPG*	**471692**!
47018S	*TROS*	204002
47019	*BOSTN*	**472164**!
470199SSR	*SPG*	470199
47019S	*TROS*	204013
4701RAR	*SPG*	4701N =
4702	*C-R*	12X19X5
47020	*BOSTN*	**472185**!
47020	*VIC*	**416271**!
47020S	*TROS*	204017
47021	*BOSTN*	**472185**!
47021	*TROS*	205004
47021	*VIC*	**412861**
470213R91	*IH*	**472397**!
47022	*BOSTN*	**472179**
47022	*VIC*	**455079**!
47023	*BOSTN*	**472179**
47023	*VIC*	**450412**
470236	*SPG*	**470712**!
47024	*BOSTN*	**472439**
47024	*VIC*	55238
470241SSR	*SPG*	**471785**
470244	*SPG*	**471787**!
470244SSR	*SPG*	**471787**
47025	*BOSTN*	**472439**
47025	*TROS*	205015
47025	*VIC*	**475384**
47026	*BOSTN*	**472572**!
47026	*TROS*	204020
47026	*TROS*	204505!

! Industrial Size/Type * Minor Width Difference > Hub Mount % Spindle Mount
= The U.S. customer service number is 877-4-TIMKEN. The Canadian customer service numbers are 800-565-4927 (English) and 800-565-0438 (French-Canadian).

Mfr. No.	Name	Zero Duplication or Recommended Industrial
47026	*VIC*	455310
47027	*BOSTN*	**472572**!
47027	*TROS*	205035
47027	*VIC*	**455144**
47028	*BOSTN*	**473238**!
47028	*VIC*	**417350**!
47028S	*TROS*	**472144**!
47029	*BOSTN*	**473238**!
47029	*VIC*	**415088**
47029	*VIC*	**415088**!
47029S	*TROS*	210914
47030	*BOSTN*	**473239**!
47030	*VIC*	**455500**
470304	*NATL*	**473457**!*
470304SSR	*NATL*	**473457**!
470308	*SPG*	**410308**!
470308	*SPG*	473468
470308N	*NATL*	**410308**!
470309	*SPG*	**471391**!
47030S	*TROS*	210945
47031	*BOSTN*	**473239**!
47031	*VIC*	455612=
470312	*SPG*	**472016**!
470316	*SPG*	**472636**!
47031S	*TROS*	**411376**!
47032	*BOSTN*	**473240**!
47032	*VIC*	**418029**!
47032S	*TROS*	**415449**!
47033	*BOSTN*	**473240**!
47033	*VIC*	370036A
47033	*VIC*	370349A
470330	*SPG*	**470605**!
470334	*NATL*	**470334**!
470334	*NATL*	50289
47033S	*TROS*	**417343**!
47034	*BOSTN*	**472319**
47034	*VIC*	**415295**
47034S	*TROS*	**412473**!
47035	*BOSTN*	**472319**
470351SSR	*SPG*	**471504**
470358SSR	*SPG*	**473231**
47035S	*TROS*	**411376**!
47036	*BOSTN*	**473241**
47036	*VIC*	**415196**!
47036S	*TROS*	**415458**!
47037	*BOSTN*	**473241**
47037S	*TROS*	415146!
47037S	*TROS*	**415991**
47038	*BOSTN*	**472144**!
47038	*VIC*	40169S
470380	*NATL*	410059
470380	*NATL*	470059
470380	*NATL*	472189A!
470380	*NATL*	9613S
470389	*SPG*	**472492**!
47039	*BOSTN*	**472144**!
47039	*VIC*	**473228**
470394	*SPG*	**473227**!
470394SSR	*SPG*	**473227**
47039S	*TROS*	**410737**!
47040	*BOSTN*	**472394**
47040	*VIC*	203002
470400SSR	*SPG*	470400
470403	*SPG*	**470774**!
470409	*NATL*	50409
47040S	*TROS*	**417487**!
47040S	*TROS*	**417487**
47041	*BOSTN*	**472394**
47041	*VIC*	240009
470410	*SPG*	**471424**!
47042	*BOSTN*	**471424**!
47043	*BOSTN*	**471424**!
470433	*SPG*	**471138**!
47043S	*TROS*	**415984**!
47044	*BOSTN*	**472492**!
47044	*VIC*	**471526**!
470441	*SPG*	**471341**!
470444	*SPG*	**471835**!
47044S	*TROS*	475348N
47045	*BOSTN*	**472492**!
470451	*SPG*	**480630**!
470452	*SPG*	**473197**
47045S	*TROS*	**416404**!
47046	*BOSTN*	**472924**!
470460SSR	*SPG*	**470460**
47046S	*TROS*	**415498**
47047	*BOSTN*	**472924**!
47047S	*TROS*	**416500**
47048	*BOSTN*	**472397**!
47048	*VIC*	**471224**!
470487N	*NATL*	**470487**=
470487SSR	*SPG*	**470487**!
47049	*BOSTN*	**472397**!
47049	*VIC*	**471649**!
47049S	*TROS*	240007=
4704B	*JN-MN*	**470954**!
47050	*BOSTN*	**473242**
47050	*VIC*	**450593**!
47506	*NATL*	**470506**
47051	*BOSTN*	**473242**
47051S	*TROS*	240009
47052	*BOSTN*	**473204**
47052	*VIC*	**471763**
47053	*BOSTN*	**473204**
470530	*NATL*	**470530**!
47054	*BOSTN*	**470898**
47054	*VIC*	**471765**!
470543	*NATL*	40360S
470547	*SPG*	4122
470547	*SPG*	470547
470547CA	*SPG*	4122
470547CA	*SPG*	470547
470547SSR	*NATL*	4122
470547SSR	*NATL*	470547
47054S	*TROS*	240023
47055	*BOSTN*	**470898**
470553	*WMG*	**471224**!
470553VGR	*SPG*	470553V
470557SSR	*SPG*	470557
47055S	*TROS*	240119
47056	*BOSTN*	**472015**!
47056	*VIC*	**471766**!
470565	*NATL*	**470565**=
470567	*NATL*	**471267***!
470567	*SPG*	**471267**!
470567SSR	*SPG*	**471267**
47057	*BOSTN*	**472015**!
47057	*VIC*	**472287**!
470574	*NATL*	**413246**
47057S	*TROS*	240151
47058	*BOSTN*	**472016**!
47058	*VIC*	**473215**!
470588SSR	*SPG*	**450588**
47059	*BOSTN*	**472016**!
47059	*VIC*	**473228**!
470596VDR	*SPG*	**470596**
47060	*BOSTN*	**473243**
47060	*VIC*	**473236**!
470605	*NATL*	**470605**
470606	*NATL*	**470606**
47061	*BOSTN*	**473243**
47061	*VIC*	**472185**!
47062	*BOSTN*	**473244**!
470625	*NATL*	**470625**!
470625	*NATL*	5115
470625V	*NATL*	**470625**=
47062S	*TROS*	240319
47063	*BOSTN*	**473244**!
470632	*SPG*	**1213N**
470632	*SPG*	40X54X6!
47063S	*TROS*	240356
47064	*BOSTN*	**472018**
47064	*VIC*	**472924**!
47065	*BOSTN*	**472018**
47065	*VIC*	**473467***!
47065	*VIC*	**473467**!
470650	*SPG*	**472705**!
47065S	*TROS*	6703S
47066	*BOSTN*	472020
47066S	*TROS*	240414
47067	*BOSTN*	472020
47067	*VIC*	**472409**
470674BX	*SPG*	224870
47068	*BOSTN*	**473245**!
470684	*SPG*	**471827**!
47068S	*TROS*	240435
47069	*BOSTN*	**473245**!
47069	*VIC*	**412920**!
4707	*C-R*	12X22X7!
4707	*C-R*	221207
47070	*BOSTN*	**471272**!
47070	*VIC*	**412040**
47070S	*TROS*	240462
47071	*BOSTN*	**471272**!
47071	*VIC*	**415449**!
470712V	*NATL*	**470712**=
470719	*SPG*	**471984**
47071S	*TROS*	240470
47072	*BOSTN*	**471138**!
47072	*VIC*	**410708**
47072S	*TROS*	6597S
47073	*BOSTN*	**471138**!
47073	*VIC*	**415458**!
470737	*NATL*	**410737**
470737SSR	*SPG*	**410737**!
47073S	*TROS*	240698
47074	*BOSTN*	**472636**!
47074S	*TROS*	240716
47075	*BOSTN*	**472636**!
47075	*VIC*	**417316**!
47075S	*TROS*	240731
47076	*BOSTN*	**412920**!
47076	*VIC*	204017
47076	*VIC*	473117
470764	*NATL*	50764
47076S	*TROS*	240733
47077	*BOSTN*	**412920**!
47077	*VIC*	**417351**!
470774	*NATL*	**470774**
470774VGR	*SPG*	**470774**
47077S	*TROS*	240735
47078	*BOSTN*	**470565**!
47078S	*TROS*	240736
47079	*BOSTN*	**470565**!
470791	*SPG*	**471466**!
47079S	*TROS*	240816
47080	*BOSTN*	**413246**
47080	*VIC*	**476470**
47080	*VIC*	**476470**!
47080S	*TROS*	240949
47081	*BOSTN*	**413246**
47082	*BOSTN*	**413247**!
47082	*VIC*	416556!
47082	*VIC*	**472157**
470825	*SPG*	**410825**
47083	*BOSTN*	**413247**!
47084	*BOSTN*	**416271**!
47084	*VIC*	**450040**
47084S	*TROS*	**481443**!
47085	*BOSTN*	**416271**!
47085S	*TROS*	**471076**
47086	*BOSTN*	**471271**!
47086	*VIC*	**472287**!
470867	*SPG*	**470898**
47087	*BOSTN*	**471271**!
47087	*SPICE*	**473367**
47087	*VIC*	**473367***!
47087	*VIC*	**473367**!
470877	*SPG*	**471633**!
47087S	*TROS*	**470530**!
47088	*BOSTN*	**470605**!
47088	*VIC*	**473010**!
470888N	*SPG*	2043
47089	*BOSTN*	**470605**!
470895	*SPG*	**471554**!
470898	*NATL*	**470898**
4708B	*JN-MN*	472951
4708B	*JN-MN*	**474252**
4709	*C-R*	12X22X7V!
4709	*C-R*	221208
47090	*BOSTN*	**415449**!
47091	*BOSTN*	**415449**!
47092	*BOSTN*	**416273**
47092	*VIC*	**416444**
47093	*BOSTN*	**416273**
47093	*VIC*	**415449**!
47094	*BOSTN*	**413248**
470946SSR	*SPG*	**470946**
47094S	*TROS*	**415995**!
47094S	*TROS*	**415995**!
47095	*BOSTN*	**413248**
47095	*VIC*	**417344**!
470950	*NATL*	483793
470954	*NATL*	**470954**!
470954	*NATL*	**470954**
47096	*BOSTN*	**415483**
47096	*VIC*	**415995***!
47096	*VIC*	**415995**!
47096S	*TROS*	**417211**!
47097	*BOSTN*	**415483**
470974R91	*IH*	**472397**!
47097S	*TROS*	**415437**
47098	*BOSTN*	**415458**!
47098	*VIC*	**415379**
470989SSR	*SPG*	470989
47099	*BOSTN*	**415458**!
4710	*C-R*	12X22X7!
4710	*C-R*	221207
47100	*BOSTN*	**417343**!
47101	*BOSTN*	**417343**!
47101S	*TROS*	331301N
47102	*BOSTN*	**416664**!
47103	*BOSTN*	**416664**!
47104	*AMC*	**473440**!
47104	*BOSTN*	**415984**!
47104	*VIC*	**471192**
47105	*BOSTN*	**415984**!
47105	*TROS*	**471652**
47106	*BOSTN*	**417316**!
47107	*BOSTN*	**417316**!
47107	*VIC*	**472636**!
47108	*BOSTN*	**415960**
471084	*WMG*	**472213**
47109	*BOSTN*	**415960**
47109	*VIC*	**415995***!
47109	*VIC*	**415995**!
4711	*C-R*	221207
47110	*BOSTN*	**415303**!

! Industrial Size/Type * Minor Width Difference

= The U.S. customer service number is 877-4-TIMKEN. The Canadian customer service numbers are 800-565-4927 (English) and 800-565-0438 (French-Canadian).

Mfr. No.	Name	Zero Duplication or Recommended Industrial
47110	*VIC*	**476470**
47110	*VIC*	**476470**!
471100	*SPG*	**471652**
471103	*NATL*	**471103**
4711035	*WOOL*	**415991**
4711035	*WOOL*	455146!
471105	*NATL*	**471105**=
471105SSR	*SPG*	**471105**!
471106	*WHITE*	**416339**
471106	*WHITE*	455031!
47111	*BOSTN*	**415303**!
47112	*BOSTN*	**417344**!
47112	*VIC*	**471526**!
471122	*SPG*	**471504**
47113	*BOSTN*	**417344**!
471138	*NATL*	**471138**
47114	*BOSTN*	**417158**!
47114	*VIC*	**471763**
471141	*NATL*	**471141**
47115	*BOSTN*	**417158**!
47115	*VIC*	**472179**
471150	*SPG*	**473231**!
47116	*BOSTN*	**416921**!
47116	*VIC*	**473460**
471161	*LETN*	**473460**
471169SSR	*SPG*	471169
47117	*BOSTN*	**416921**!
47117S	*TROS*	**471466**
47118	*BOSTN*	**417349**!
47118	*VIC*	**417316**!
47119	*BOSTN*	**417349**!
47119	*VIC*	**415995**!
471193SSR	*SPG*	**471193**
471195	*NATL*	**471195**
4711B	*JN-MN*	**415072***
47120	*BOSTN*	**417350**!
47120S	*TROS*	**471224**!
47121	*BOSTN*	**417350**!
47121	*VIC*	**473214**
47121S	*TROS*	340136
47122	*BOSTN*	**415995**!
47122	*VIC*	**470954**!
471224	*NATL*	350909*
471224	*NATL*	**471224***
471224	*NATL*	**471224***
471224V	*NATL*	**471224**=
47122S	*TROS*	**470954**!
47123	*BOSTN*	**415995**!
471231	*NATL*	353131
471231	*NATL*	**471231**
47123S	*TROS*	**472560N**
47124	*BOSTN*	**417351**!
47125	*BOSTN*	**417351**!
47125	*VIC*	210914
471255	*NATL*	**471255**
47126	*BOSTN*	**417621**!
47126	*VIC*	**452222**!
471264	*NATL*	450535
471267	*NATL*	**471267***
471267	*NATL*	**471267***
471267V	*NATL*	**471267**=
471267V	*NATL*	**471267**=
471268	*WHITE*	6635S
471269	*WHITE*	JV1210=
47126S	*TROS*	**471643**!
47127	*BOSTN*	**417621**!
471270	*NATL*	**471270**
471271	*NATL*	**471271**
471272	*NATL*	**471272**
471272V	*SPG*	**471272**
471276VDR	*SPG*	**471276**
47128	*BOSTN*	**416288**!
47128	*VIC*	210945
471281	*NATL*	**471281**=
471288	*NATL*	**473237**!
47128S	*TROS*	340356
47129	*BOSTN*	**416288**!
47129	*VIC*	**470530**!
471291VGR	*SPG*	471291V
47129S	*TROS*	**350364**
47130	*BOSTN*	**417171**!
471308	*SPG*	**470380**!
47130S	*TROS*	**330385**
47131	*BOSTN*	**417171**!
471312L	*C-R*	55431=
47131S	*SPG*	**472705**!
47131S	*TROS*	**471267**!
47132	*BOSTN*	**417172**
47132	*VIC*	**415449**!
471324	*SPG*	**471255**!
47132S	*TROS*	340400
47133	*BOSTN*	**417172**
47133S	*TROS*	340413
47134	*BOSTN*	**476470**
471341	*NATL*	**471341**
471344	*WMG*	50476
47135	*BOSTN*	**476470**
471354	*NATL*	**471354**
47136	*BOSTN*	**417181**!
47136	*VIC*	**415379**!
47136	*VIC*	**415379**
47136S	*TROS*	**481537**
47137	*BOSTN*	**417181**!
47137	*VIC*	**412473**!
471379SSR	*SPG*	**471379**
47138	*BOSTN*	**418028**!
47138	*VIC*	415899N
47138	*VIC*	**416624**
47138S	*TROS*	**254270**
47139	*BOSTN*	**418028**!
47139	*VIC*	**415437**
471391	*NATL*	**471391**
4713VXR	*SPG*	**415035**
47140	*BOSTN*	**417353**!
471405SSR	*SPG*	**471405**
47141	*BOSTN*	**417353**!
47141	*VIC*	**417211**!
471413	*NATL*	**471413**
471413	*NATL*	7412S
47141S	*TROS*	340724!
47142	*BOSTN*	**416294**!
47142	*VIC*	**471829**
471424V	*NATL*	**471424**=
47143	*BOSTN*	**416294**!
47143	*VIC*	6312
47144	*BOSTN*	**412473**!
471442	*NATL*	**471442**
47145	*BOSTN*	**412473**!
47145S	*TROS*	340787
47146	*BOSTN*	**417191**
471466	*NATL*	**471466**!
471466V	*NATL*	**471466**=
47146S	*TROS*	340797
47147	*BOSTN*	**417191**
471472	*NATL*	**471472**
47147S	*TROS*	340815
47148	*BOSTN*	**417354**!
471486	*SPG*	**470380**!
471486	*SPG*	472189A!
47149	*BOSTN*	**417354**!
47149	*VIC*	**472185**!
47149S	*TROS*	340817
4714B	*JN-MN*	**471750**!
4715	*C-R*	12X24X7
47150	*BOSTN*	**416624**!
47150	*VIC*	**410708**
471502	*DOLE*	25598
471504	*NATL*	**471504**
47150S	*TROS*	340823
47151	*BOSTN*	**416624**!
47151	*VIC*	**415995**
47151	*VIC*	**415995**!
471516	*NATL*	**471516**
47151S	*TROS*	340853
47152	*BOSTN*	**415991**!
47152	*BOSTN*	**415991**
47152S	*TROS*	340872
47153	*BOSTN*	**415991**!
47153	*BOSTN*	**415991**
471535	*NATL*	450536
471538	*NATL*	**471538**
471538VGR	*SPG*	471538V
471539	*NATL*	**471539**
47154	*BOSTN*	**417196**!
471549	*NATL*	**471549**
471549	*NATL*	472467
47154S	*TROS*	340900
47155	*BOSTN*	**417196**!
471551	*NATL*	**471551**
471553	*NATL*	**471553**
471554	*NATL*	**471554**=
471554V	*NATL*	**471554**=
471559	*SPG*	**471553**!
47156	*BOSTN*	**415437**
47156	*VIC*	9613S
471567	*NATL*	**471567**
47156S	*TROS*	340927
47157	*BOSTN*	**415437**
471570	*NATL*	**471570**
47157S	*TROS*	**471267**!
47158	*BOSTN*	**416332**!
47158	*VIC*	**470565**!
471581	*SPG*	**481568**!
47159	*BOSTN*	**416332**!
47159S	*TROS*	341022
47160	*BOSTN*	**415937**!
47160	*VIC*	**473234**!
47161	*BOSTN*	**415937**!
47161	*VIC*	**412871**!
471619	*NATL*	**471619**
47161S	*TROS*	345035
47162	*BOSTN*	**417355**!
47162	*VIC*	**471801**!
47162S	*TROS*	345146
47163	*BOSTN*	**417355**!
47163	*VIC*	**473227**!
471633	*NATL*	350877
47164	*BOSTN*	**416125**!
47164	*VIC*	**415350**
471642SSR	*SPG*	**471642**
471646	*NATL*	**471646**
471649	*NATL*	**471649**
471649V	*NATL*	**471649**=
47165	*BOSTN*	**416125**!
47165	*VIC*	**417481**
471650	*WMG*	481650
471652	*NATL*	482208
471652V	*NATL*	**471652**
471652V	*NATL*	**471652**
471653	*NATL*	**471653**
471653SSR	*SPG*	**471653**!
471656	*SPG*	**471643**!
47166	*BOSTN*	416041
471660	*SPG*	**471647**
47166S	*TROS*	**471413**!
47167	*BOSTN*	416041
47167	*VIC*	**415449**!
47168	*BOSTN*	**415379**
471684	*NATL*	**471684**
471684	*SPG*	**471684**!
471689	*NATL*	**471689**
47168S	*TROS*	**481443**!
47169	*BOSTN*	**415379**
471692	*NATL*	**471692**
47169S	*TROS*	**471646**!
47170	*BOSTN*	**417205**!
47170	*VIC*	**472179**
471702	*SPG*	**471688**
471703	*SPG*	**471689**!
471705	*NATL*	**471705**
471706	*SPG*	**471692**!
471707SSR	*SPG*	471707
471709	*SPG*	**471413**!
47170S	*TROS*	**471689**!
47171	*BOSTN*	**417205**!
47171	*VIC*	**413469**!
471718	*SPG*	**471705**!
47171S	*TROS*	**481163**!
47172	*BOSTN*	**416339**
47172S	*TROS*	**471538**!
47173	*BOSTN*	**416339**
47173	*VIC*	6098=
47173S	*TROS*	**350364**
47174	*BOSTN*	**417211**!
471747	*NATL*	**471747**
47174S	*TROS*	**474272**
47175	*BOSTN*	**417211**!
47175S	*TROS*	**471267**!
47176	*BOSTN*	**416345**!
471762	*NATL*	**471762**
471764	*NATL*	**471764**
471765	*NATL*	**471765**
471766	*NATL*	**471766**
47176S	*TROS*	**473454**
47177	*BOSTN*	**416345**!
471770	*SPG*	**471760**
47178	*BOSTN*	**415697**!
471785	*NATL*	**471785**
471787	*NATL*	**471787**
47178S	*TROS*	**473424**!
47179	*BOSTN*	**415697**!
47179	*VIC*	**481537**
47179S	*TROS*	350909
47179S	*TROS*	**471224**!
4718	*C-R*	12X25X4.5
4718	*C-R*	12X25X7*
47180	*BOSTN*	**417366**!
47180	*VIC*	**471554**!
471801	*NATL*	450165
471808	*NATL*	**471808**=
47180S	*TROS*	350942
47181	*BOSTN*	**417366**!
47181	*VIC*	470645
471817SSR	*SPG*	**451817**
47181S	*TROS*	**350974**!
47182	*BOSTN*	**415035**!
47182	*VIC*	**471270**!
471821	*NATL*	**471821**
471827	*NATL*	**471827**
471829VDR	*SPG*	**471829**
47183	*BOSTN*	**415035**!
47183	*SPICE*	**471689**!
47183	*VIC*	**471689**!
471835	*NATL*	**471835**
471835VGR	*SPG*	471835V
471839	*SPG*	**473010**!
47184	*BOSTN*	**417356**!
47184	*VIC*	**471652**

! Industrial Size/Type * Minor Width Difference

= The U.S. customer service number is 877-4-TIMKEN. The Canadian customer service numbers are 800-565-4927 (English) and 800-565-0438 (French-Canadian).

Mfr. No.	Name	Zero Duplication or Recommended Industrial
47185	*BOSTN*	**417356**!
47185	*VIC*	**474255**
471853	*SPG*	**350936**
471854	*NATL*	**350936**
47185S	*TROS*	**415082**
47186	*BOSTN*	**417357**
471866	*NATL*	**471281**
471869	*NATL*	3173
471869	*NATL*	710928
47186S	*TROS*	**417350**!
47187	*BOSTN*	**417357**
47187	*VIC*	**471413**!
47187	*VIC*	7412S
471870	*NATL*	**471870**
47188	*BOSTN*	**416130**!
47188	*VIC*	**471818**
47189	*BOSTN*	**416130**!
47189	*VIC*	**473423**
47190	*BOSTN*	416556!
47190	*BOSTN*	**472157**
47190	*VIC*	**472179**
471904SSR	*SPG*	**471904**
47190S	*TROS*	**327303**!
47191	*BOSTN*	416556!
47191	*BOSTN*	**472157**
47191	*VIC*	**471984***
47191S	*TROS*	365008
47192	*BOSTN*	**415196**!
47192	*TROS*	455197N
47192	*VIC*	**472185**!
47193	*BOSTN*	**415196**!
47193	*VIC*	203034
471936	*SPG*	**473238**!
47194	*BOSTN*	**416891**!
47194	*VIC*	**472319**
471940	*SPG*	**472144**!
47195	*BOSTN*	**416891**!
47195	*VIC*	**471391**!
471950SSR	*SPG*	**471950**
471952SSR	*SPG*	**471952**
47195S	*TROS*	203006!
47196	*BOSTN*	**416135**!
47196	*VIC*	**471424**!
47197	*BOSTN*	**416135**!
47197	*VIC*	**471870**!
47197S	*TROS*	480950N=
47198	*BOSTN*	**416888**!
47198	*VIC*	**450133**
47199	*BOSTN*	**416888**!
47199	*VIC*	**473475**
47199S	*TROS*	**451143**
4720	*C-R*	12X25X7
47200	*BOSTN*	**416153**!
47200	*VIC*	**413247**!
472005	*SPG*	**473240**!
472008	*SPG*	**470530**!
472009	*SPG*	**472397**!
47200S	*TROS*	240027=
47201	*BOSTN*	**416153**!
47201	*VIC*	**471887**
472015	*NATL*	**472015**
472016	*NATL*	**472016**
47202	*BOSTN*	**416892**!
47202	*VIC*	**415082**
47203	*BOSTN*	**416892**!
47204	*BOSTN*	**415138**!
47204	*VIC*	100495
47204	*VIC*	**417349**
47205	*BOSTN*	**415138**!
47205	*VIC*	**416404**!
47206	*BOSTN*	**417247**!
47206	*VIC*	**473215**!
47207	*BOSTN*	**417247**!
47208	*BOSTN*	**415725**!
47208	*VIC*	**476470**
472082S	*WMG*	**472082**
47209	*BOSTN*	**415725**!
47209	*VIC*	**412473**!
4721	*C-R*	12X25X7
47210	*C-R*	120X140X13!*
47210	*C-R*	710084
47210	*C-R*	717004
47210	*VIC*	200640
47211	*VIC*	**471504**!
47212	*C-R*	712003
47212	*VIC*	**472164**!
47213	*C-R*	712003
472138SSR	*SPG*	**472138**
472144	*NATL*	**472144**
47215	*VIC*	**473235**!
472156	*ADAMS*	**415988**
472156	*LETN*	**415988**
472157	*NATL*	416556
472157	*NATL*	**472157**
472157	*NATL*	476556=
472157	*NATL*	486556=
472164	*NATL*	**472164**=
472164	*NATL*	**472164**=
472164V	*NATL*	**472164**
47217	*VIC*	**473367**
47217	*VIC*	**473367**!
472179	*NATL*	**472179**=
472185	*NATL*	290070=
472185	*NATL*	**472185**
472189	*SPG*	**470380**!
472189	*SPG*	472189A!
472189A	*NATL*	9613S
47219	*VIC*	**415857**!
472193	*NATL*	**472193**
47220	*TROS*	9568
47220	*VIC*	**473474**
47221	*VIC*	**417484**!
472221R91	*IH*	200887
472222R1	*IH*	JV1157
472236H	*SPG*	**472409**
472238SSR	*SPG*	**472238**
472239SSR	*SPG*	**472239**
47224	*VIC*	**416271**!
47225	*C-R*	120X145X12!
472258	*NATL*	**472258**
472258V	*NATL*	**472258**=
472287	*NATL*	**472287**=
47229	*VIC*	**455583N**!
47230	*C-R*	120X145X12!
47230	*C-R*	231204
47230	*VIC*	**470530**!
47231	*VIC*	**415449**!
472311	*NATL*	**472311**
47232	*VIC*	44052
472324E	*NATL*	**472324**!
47233	*VIC*	**473241**
472350	*NATL*	**472350**=
472350SSR	*SPG*	**472350**!
472354	*NATL*	**472354**
47236	*VIC*	6954S
47237	*VIC*	6952S=
472377	*SPG*	**471766**!
47238	*VIC*	**417082**
47239	*VIC*	**471692**!
472397	*NATL*	**472397**=
47240	*C-R*	231206
47240	*TROS*	6966S
47240	*VIC*	**480630**!
472409	*NATL*	**472409**=
472419SSR	*SPG*	**472419**
47243	*VIC*	**470954**!
472439VD	*SPG*	**472439**
47244	*VIC*	205004
472446SSR	*SPG*	**472446**
47245	*C-R*	370220A
472466SSR	*SPG*	**472466**!
47248	*VIC*	**471539**!
47249	*VIC*	240470
472492	*NATL*	**472492**
4724B	*JN-MN*	**415995**!
47250	*C-R*	120X150X12!
47250	*C-R*	370220A
472501	*GMC*	5699
47251	*VIC*	**471076**
47252	*C-R*	120X150X12!
47252	*VIC*	**471747**!
47253	*C-R*	120X150X12V
47253	*VIC*	**471192**
472535SSR	*SPG*	**472535**
472536SSR	*SPG*	**472536**
472538SSR	*SPG*	**472538**
472539SSR	*SPG*	**472539**
47254	*C-R*	120X150X12V
47255	*VIC*	**473016**!
47256	*VIC*	240319
472560N	*NATL*	**472560N**
47257	*VIC*	**470625**!
472572	*NATL*	**472572**
47258	*VIC*	**473228**!
47259	*VIC*	340927
47260	*C-R*	120X150X12!*
47260	*VIC*	6283S
47261	*VIC*	40154S
47262	*TROS*	6465
47263	*VIC*	**472924**
472636	*NATL*	**472636**
472642VDR	*SPG*	472642V
472644VDR	*SPG*	**472644**
472649SSR	*SPG*	**472649**
47265	*BOSTN*	**471829**
47265	*VIC*	40316S
472651VDR	*SPG*	472651V
472653	*NATL*	**472653**=
472653VGR	*SPG*	**472653**
472655SSR	*SPG*	**472655**
47266	*VIC*	50501
472660SSR	*SPG*	**472660**
47267	*VIC*	455556
47269	*VIC*	45013S
47270	*VIC*	**415442**!
47270	*VIC*	55442
47273	*C-R*	120X155X15
47275	*VIC*	5499=
47276	*VIC*	**470774**!
47278	*VIC*	1049
47279	*VIC*	204013
47280	*VIC*	**451078**!
47280C1	*VIC*	**451078**!
47281	*VIC*	**471413**!
472810	*NATL*	252810
472810	*NATL*	**472810**
47282	*VIC*	8059S
472826	*NATL*	450129
47283	*VIC*	**471413**!
47284	*VIC*	7013S
472841	*ADAMS*	**470712**!
472843	*ADAMS*	**472179**
47285	*VIC*	**471413**!
472858VGR	*SPG*	5133
47287	*C-R*	120X160X12!
47287	*VIC*	**471538**!
47288	*VIC*	7013S
47289	*C-R*	120X160X12V
47289	*VIC*	**451078**!
4728B	*JN-MN*	**471570**!*
47290	*C-R*	120X160X12
47290	*VIC*	**472311**!
47291	*C-R*	120X160X12
47291	*VIC*	**480821**!
472920	*SPG*	**412920**!
472924	*NATL*	**472924**=
47293	*VIC*	**472492**!
47294	*VIC*	**471413**!
472950SSR	*SPG*	**472950**
472953SSR	*SPG*	**472953**
472953VDR	*SPG*	**472953**
472954VDR	*SPG*	**472954**
47297	*VIC*	**480210**!
47298	*VIC*	7399S!
47299	*VIC*	**415302**
472HH101	*DANA*	**415995**
4730	*C-R*	12X26X7
473010	*NATL*	**473010**
47304	*VIC*	**471267**!
473049VDS	*SPG*	473049V=
47305	*VIC*	**470954**
473096	*NATL*	350156
473099	*NATL*	**253099**!
47311	*VIC*	**471526**!
473117SSR	*SPG*	473117
47312	*VIC*	7013S
473129	*ADAMS*	**410190**
473135SLR	*SPG*	**474278**!
47316	*VIC*	6590S
47317	*VIC*	204079=
47317	*VIC*	**471854**!
473179	*NATL*	**473179**
47318	*VIC*	**455566**
47319	*VIC*	203008
47319	*VIC*	**473317**
473197	*NATL*	**473197**
473197VGR	*SPG*	**473197**
473205	*NATL*	**473205**
47321	*VIC*	**471193**
473211	*NATL*	**473211**=
473214	*NATL*	**473214**
473215	*NATL*	**473215**
473215	*NATL*	9568
47322	*VIC*	7886S
473225	*NATL*	**473225**=
473227	*NATL*	**473227**
473228	*NATL*	**473228**
473229	*NATL*	**473229**=
473230	*NATL*	471289=
473230	*NATL*	**473230**=
473231	*NATL*	1192
473231	*NATL*	**473231**
473232	*NATL*	**473232**
473234	*NATL*	**473234**
473235	*NATL*	**473235**
473236	*NATL*	**473236**
473237	*NATL*	**473237**
473238	*NATL*	**473238**
473238	*NATL*	50082
473238VDR	*SPG*	**473238**=
473239	*NATL*	**473239**
47324	*VIC*	**473442**!*
473240	*NATL*	**473240**=
473243	*NATL*	**473243**=
473243	*NATL*	**473243**=
473244	*NATL*	**473244**=
473245	*NATL*	**473245**=
473246	*SPG*	**413246**

! Industrial Size/Type * Minor Width Difference

= The U.S. customer service number is 877-4-TIMKEN. The Canadian customer service numbers are 800-565-4927 (English) and 800-565-0438 (French-Canadian).

Mfr. No.	Name	Zero Duplication or Recommended Industrial
473247	SPG	**413247**!
473248	SPG	**413248**
473258	NATL	8168=
473259	NATL	**473259**
47326	VIC	42260S
47327	VIC	7929S
47329	VIC	**473473**
473296	SPG	**472319**
4733	C-R	12X26X7
47330	VIC	**470506**!
47331	VIC	**416500**
473313	NATL	**473313**
473316	C-R	**415437***
473316M1	C-R	**415437**
473316M1	C-R	**415437**!
473328	C-R	**417210**!*
473328M1	C-R	**417210**!*
47333	VIC	55337
47335	VIC	**473448**
47336	VIC	204035
473367	NATL	**473367**=
47337	VIC	340900
47338	VIC	**471271**
47338L	C-R	**415577**
47339	VIC	**473449**
47340	VIC	442380
473406	NATL	450033
47341	VIC	8976S
473419	NATL	**473419**
47342	VIC	**417480**!
473424	GMC	5092
473424	NATL	353137
473428VDR	NATL	473428V=
473439	NATL	**473439**=
47344	VIC	**473228**!
473440	NATL	**473228**
473440	NATL	**473440**
473442	NATL	5778
473444	NATL	**473444**
473444VD	SPG	**473444**
473449	NATL	**473449**
47345	VIC	353135
47345	VIC	**474278**!
473450	NATL	**473450**
473451	NATL	473451
473454	NATL	**473454**
473457	NATL	**473457**=
473458	NATL	**473458**!
473459	NATL	**473459**!
47346	VIC	331228H
473460	NATL	**473460**
473461	NATL	**473461**
473462	NATL	**473462**!
473462	NATL	**473462**!
473464	NATL	**473464**
473467	NATL	**473467**=
47347	VIC	9376
47348	HYST	**416888**!
47348	VIC	**474260**
47349	VIC	6832S
473490SSR	SPG	**473490**
47350	C-R	55367=
47350	VIC	203016
47351	VIC	203013
473517	NATL	**473517**
47352	VIC	204008
47353	VIC	**450400**
47354	VIC	**416071**
47355	VIC	**450593**!
473551SSR	SPG	**473551**
47356	VIC	**330699**!
47356	VIC	340771
473573SSR	SPG	**473573**
47360	TROS	1062=
47361	VIC	7692S
47362	VIC	7300S
47362S	TROS	203006!
47363	VIC	7715S
47364	VIC	**484054**
47364S	TROS	204035
47365	VIC	**473228**
47365S	TROS	**415725**!
47366	VIC	8121S
47366S	TROS	**471554**!
47367	VIC	8133S
473677SAR	SPG	473677
47367S	TROS	**471224**!
47368S	TROS	**471689**!
47369S	TROS	**472164**!
47370	VIC	**471750**
47371	VIC	**450188**
47372S	TROS	**417487**!
47372S	TROS	**417487**
47373	VIC	**473446**
47374	VIC	**471827**!
47375	C-R	**415138**=
47375	VIC	**413469**!
47375S	TROS	240215
47376	VIC	203025
47377	VIC	203029
47378S	TROS	332062
47379	C-R	714750
47380	C-R	**415138**!
47380	VIC	471707!
47380	VIC	471707N
47381	C-R	**415138**!
47381	VIC	9613S
47381S	TROS	**470954**
47382	C-R	**415138**!
47382	VIC	332062
47383	C-R	**415138**!
47383	TROS	**472311**!
47383	VIC	**473228**
47384	C-R	**415138**
47384	C-R	**415138**=
47384	VIC	8597S
47385	VIC	6960
47385S	TROS	415983N!
47386S	TROS	441130
47387	VIC	**472492**!
47388	C-R	39952
47388	VIC	8460N
47388S	TROS	**472179**
47389	VIC	8477S
47390	VIC	**473445**
47392	VIC	8620N
47394	C-R	**415138**!
47394	VIC	**470954**!
47395	C-R	**415138**!
47395	VIC	8594S
47396	C-R	**415138**!
47396	VIC	**473179**
47397	C-R	**415138**!
47398	C-R	**415138**!
47398	VIC	**472082**
47399	C-R	**415138**!
47399	VIC	8792S
473HMS320-Q6	C-R	255833=
4740	C-R	12X27X7
47400	VIC	6808N
474018R91	IH	204038
47403	VIC	417267
47404	VIC	471169
47405	VIC	**411330**!
474051	WHITE	46997S
47405HA	IH	**415449**!
47406	VIC	**470687**
47407	VIC	5666
474094R91	IH	**471750**
474096SCR	SPG	225110
474096SCR	SPG	51X65X7!
474097SCR	SPG	223605
474097SCR	SPG	36X50X7!
474099	WHITE	370191A
474099	WHITE	**415085**!
474099	WHITE	456648
4740BH1	SPG	4740
47410	VIC	**416271**!
474107	WHITE	5408
4741118	CHRYS	4528N
4741119	CHRYS	2465
474119SSR	SPG	223840
474119SSR	SPG	38X58X8!
474125R	SPG	223555
474125R	SPG	35X64X8!
474125RRR	SPG	223555
474125RRR	SPG	35X64X8!
474127SSR	SPG	474127
4741296	CHRYS	4529N
47413	VIC	9569S
474131SSR	SPG	474131
474135RRR	SPG	224255
474135RRR	SPG	42X65X10!
474137SSR	SPG	224320
47415	VIC	8835S
47415SF	VIC	8835S
47416	VIC	2361
47416	VIC	**472466**!*
474161SSR	SPG	474161
47417	VIC	8429S
474176	BENDI	**472560N**
47418	VIC	8940S
47419	VIC	6815
4741908	CHRYS	713103
4741920	CHRYS	4741
47420	VIC	8975S
47421	VIC	8976S
47423	VIC	9150S
474230SS	SPG	474230
47425	VIC	204017!
47425	VIC	205017
474252	NATL	472951
474253	NATL	**474253**
474253	NATL	**474253**=
474254	NATL	**474254**
474255	NATL	**474255**
474256	NATL	**474256**
47426	C-R	**415138**!
474260	NATL	**474260**
474264	NATL	**474264**
474265	NATL	**474265**
47427	VIC	200371
474272	NATL	**474272**
474273	NATL	**474273**
474274	NATL	**474274**
474276	NATL	**474276**!
474277	NATL	**474277**
474278	NATL	322353
474278	NATL	323126
474278	NATL	353135
474278	NATL	**474278**
474278	NATL	50356=
474278	NATL	6859S
47428	VIC	200763
474281	NATL	**474281**
474288	SPG	36X58X8!
47430	VIC	42101S
47431	VIC	**412119**!
474316	C-R	**415437**
474316	C-R	**415437**!
474316M1	C-R	**415437**
474316M1	C-R	**415437**!
47432	VIC	**472016**
474320M1	C-R	**415937**!*
474324	C-R	**415379**!
474324	C-R	**415379**
474324M1	C-R	**415379**!
474324M1	C-R	**415379**
474328	C-R	**417210**!*
474328M1	C-R	**417210**!*
47433	VIC	**472492**!
47435	VIC	9161
47436	ALLCH	**476470**
47436	VIC	9049
47436	VIC	9049N
47438	VIC	**474274***
47438	VIC	8994N=
47439	VIC	9342S
47440	C-R	**417538**
47440	VIC	7245
47441	C-R	**417538**
474411	BENDI	**470954**!
47442	VIC	6808N
47444	VIC	**480844**
47445	VIC	441319
47447	VIC	331173
47448	VIC	8750S
47449	VIC	3604
47450	VIC	8660S
47451	C-R	**417538**
47451	VIC	8935S
47452	VIC	**472394**
47453	VIC	9599S
47454	VIC	200855
47455	C-R	200642
47455	VIC	200110
47456	VIC	6575S
47457	VIC	9569S
47458	VIC	9161
47460	VIC	712146
47460	VIC	9911S
47461	VIC	8660S
47462	VIC	**473179**
4746258	CHRYS	4333N
47463	VIC	9913
47464	VIC	**470380**!
47466	VIC	9912
47467	VIC	**473235**
4746772	AMC	5778
4746772	AMC	5778V
4746772	CHRYS	5778
4746772	CHRYS	5778V
474679	GMC	3667
47469	VIC	9762S
4746B	JN-MN	**417551**
47470	VIC	5109
47471	C-R	**417247**!
47471	VIC	5123
47472	VIC	292594
47473	VIC	5109
47474	C-R	**417247**!
47475	C-R	**417247**!
474757	ADAMS	**415984**!
474757	LETN	**415984**!
47476	C-R	**417247**!
47476	VIC	4250
47477	C-R	**417247**!
47477	VIC	8871

! Industrial Size/Type * Minor Width Difference

= The U.S. customer service number is 877-4-TIMKEN. The Canadian customer service numbers are 800-565-4927 (English) and 800-565-0438 (French-Canadian).

Mfr. No.	Name	Zero Duplication or Recommended Industrial
474770	*ADAMS*	**456105**
474770	*LETN*	**456105**
474772	*ADAMS*	**473460**
474772	*LETN*	**473460**
474773	*BENDI*	240319
474774	*ADAMS*	**471647**
474774	*LETN*	**471647**
47477BV	*VIC*	8871
47478	*VIC*	2689S
474784	*ADAMS*	**471689**!
474784	*LETN*	**471689**!
474784	*WABCO*	**471689**!
47479	*C-R*	**417247**!
47479	*HYST*	**417357**
47479	*VIC*	712146
474795	*BENDI*	240356
474798	*ADAMS*	**416158**
474798	*LETN*	**416158**
47481	*C-R*	39825
47481	*C-R*	487250V!
474824	*ADAMS*	**415483**!
474824	*LETN*	**415483**!
474824	*WABCO*	**415483**
47483	*VIC*	**470625**!
47483	*VIC*	5115
47484	*C-R*	415213N
47484	*VIC*	**472747**
47485	*VIC*	8521S
47486	*VIC*	3394
47488	*VIC*	2642
47489	*VIC*	**417158**!
47490	*VIC*	482267
47491	*VIC*	**415458***
47491	*VIC*	**415458**!
47492	*VIC*	9316
47494	*HYST*	**415294**!
47494	*SPICE*	370033A
47494	*VIC*	370033A
47495	*VIC*	370023A
47496	*VIC*	6808N
47497	*VIC*	40316S
47498	*VIC*	410059
47498	*VIC*	**470380**!
47499	*HYST*	**416706**!
47499	*VIC*	**471652**
47499	*VIC*	482208!
474B316	*C-R*	**415437**
474C316	*C-R*	**415437**
474E324	*C-R*	**415379**
474FM324	*C-R*	**415379***
474M328-L	*C-R*	**417210**!
474W314-Y13	*C-R*	**455858**
474X6-L	*C-R*	200642
4750	*C-R*	12X28X7
47500	*C-R*	**417247**!
47500	*VIC*	2674!
47500	*VIC*	370054A
475003	*NATL*	**415458**!
475004	*SPG*	**417316**!
475009RRR	*SPG*	**415960**
47501	*VIC*	9339S
475012VAR	*SPG*	475012A
475016	*WHITE*	**416476**!
47502	*VIC*	**416273**!
47503	*VIC*	9316
475035	*SPG*	**415035**
47504	*VIC*	486857
47505	*VIC*	9943
47506	*VIC*	200763
47507	*SPICE*	9864S
47507	*VIC*	200870
475072	*SPG*	**415072**
475079	*SPG*	**455079**!
47508	*VIC*	205009=
47509	*VIC*	200855
4751	*C-R*	12X28X7
47510	*C-R*	415213N
47511	*VIC*	200895=
47512	*VIC*	**416956**
47513	*VIC*	**471750**!
475137RAR	*SPG*	415137
475138	*SPG*	**415138**!
47515-1	*VIC*	5397$
475156	*SPG*	**417621**!
47516	*VIC*	2443
47517	*VIC*	**473467**!
47518	*VIC*	473560N
47518	*VIC*	710386
47519	*VIC*	5131
475196	*SPG*	**415196**!
4752	*C-R*	12X28X7
4752	*C-R*	12X30X7
47521	*VIC*	**477069**!
47521	*VIC*	712598
47522	*VIC*	2043
47523	*VIC*	5121
47524	*VIC*	2955
47525	*VIC*	3087
47526	*VIC*	2222
47527	*VIC*	3214
47528	*VIC*	4148
475281	*SPG*	**417349**!
47529	*VIC*	3195
47530	*VIC*	2286
475303	*SPG*	**415303**!
475304	*SPG*	**476470**
475310	*C-R*	**416313**
475316	*C-R*	**415437**!
475316	*C-R*	**415437**
475316	*CABOT*	**415437**!
475316	*CABOT*	**415437**
475316M1	*C-R*	**415437**
475316M1	*C-R*	**415437**!
475318	*C-R*	417497
475318M1	*C-R*	417497
475319RAR	*SPG*	**417495**
47532	*VIC*	3732S
475320	*C-R*	**415937**!*
475320M1	*C-R*	**415937**!
475322	*C-R*	**417501**
475322M1	*C-R*	**417501**
475324	*C-R*	**415379**!
475324	*C-R*	**415379**
475324	*GMC*	**415379**!
475324	*GMC*	**415379**
475324M1	*C-R*	**415379**!
475324M1	*C-R*	**415379**
475326	*C-R*	455178=
475328	*C-R*	**417210**!
475328M1	*C-R*	**417210**!
47534	*VIC*	3667
47534	*VIC*	473546!
47537	*ALLCH*	**473205**
47537	*VIC*	**416404**
475379	*SPG*	**415379**
47538	*C-R*	**416865**!
47538	*VIC*	8429S
47539	*VIC*	40389S
47539	*VIC*	**472492**!
4753B	*JN-MN*	**415047**
47540	*VIC*	**415389**
475423C91	*IH*	711552
47543	*VIC*	**417621**
47543	*VIC*	5509
475437	*SPG*	**415437**
47544	*VIC*	**482163**!
475449	*SPG*	**415449**!
47545	*VIC*	43290S
475458	*WMG*	**415458**!
47546	*VIC*	3794
47547	*VIC*	710068
475483	*SPG*	**415483**
47549	*C-R*	**417252**
47549	*VIC*	**416273**
4755	*C-R*	12X28X7V
47550	*C-R*	**417252**
47550	*VIC*	8610
47551	*C-R*	**417252**
47551	*VIC*	3348
47552	*VIC*	2440
47553	*VIC*	3357
47555	*VIC*	2876
47556	*VIC*	442874
47557	*VIC*	9487
47558	*VIC*	**413248**
47559	*VIC*	**473313**!
4755B	*JN-MN*	**417546**!
47562	*VIC*	2443
475621	*WHITE*	456618
475645	*SPG*	**415645**!
47566	*VIC*	2658
47567	*VIC*	**417158**!
47569	*VIC*	710007
475697	*SPG*	**415697**!
4757	*C-R*	12X28X7V
47570	*HYST*	55276=
47570	*VIC*	2655
475713	*WHITE*	6532S=
47572	*VIC*	3945
475720	*WHITE*	6532S=
475725	*SPG*	**415725**!
475733	*SPG*	**417316**!
47574	*VIC*	1196
47575	*VIC*	**473258**
47575TA	*TRSCM*	**415138**!
47576	*VIC*	1955
47576	*VIC*	52X65X9!
47577	*VIC*	223240
47577	*VIC*	32X48X8!
47578	*VIC*	**473445**
47579	*VIC*	1097N
47580	*VIC*	222510*
47580	*VIC*	25X35X7!*
47581	*VIC*	**416292**
47582	*VIC*	**472572**!
47583	*C-R*	**415066**
47583	*VIC*	**472572**
475831	*WHITE*	5405
475831A	*WHITE*	5405
475831B	*WHITE*	5405
475836	*SPG*	**415995**!
475836	*SPG*	**415995**!
47584	*VIC*	7186S
47585	*VIC*	**455080***
47585TA	*TRSCM*	**417538**
47587	*VIC*	204027
47589	*C-R*	**415066**
47589	*VIC*	712625
475894	*SPG*	**412473**!
4758B	*JN-MN*	**470954**!*
47590	*C-R*	**415066**
47590	*VIC*	2503
47590	*VIC*	2503N
47593	*VIC*	204500!
475937	*SPG*	**415937**!
47594	*C-R*	**415066**
47594	*VIC*	**472164**!
47595	*VIC*	452742
475953	*SPG*	**415035**
47596	*VIC*	370132A
475960	*NATL*	**415960**
47597	*VIC*	456744N
47598	*VIC*	**412119**!
475984	*SPG*	**415984**!
47599	*VIC*	**415995**!
47599	*VIC*	**415995**
475995V	*NATL*	**415995**!
475F324	*C-R*	**415379***
475FF316	*C-R*	**415437**
475FM324	*C-R*	**415379***
475HD316	*C-R*	**415437**
475HM316	*C-R*	**415437**
475W316	*C-R*	**415437**!
475W316	*C-R*	**415437**
475W316-M1	*C-R*	**415437**!
475W316-M1	*C-R*	**415437**
475W320	*C-R*	**415937**!*
475W324	*C-R*	**415379**!
475W324	*C-R*	**415379**
475W625	*CONE*	5527
4760	*C-R*	12X30X7
47600	*VIC*	**415483**
476011	*SPG*	**417621**!
47602	*VIC*	**415988**
47603	*VIC*	3227
47604	*VIC*	1948
47604	*VIC*	50X68X8!
476041	*SPG*	416041
476047	*SPG*	**416332**!
47606	*VIC*	224820
47606	*VIC*	48X62X8!
47606TA	*TRSCM*	415213N
47606TA	*TRSCM*	**417247**!
47607	*VIC*	473812
47608	*VIC*	370003A
47609	*VIC*	**473179**!
4760B	*JN-MN*	**417343**!
47610	*VIC*	**471271**!
476107	*SPG*	**416107**!
47611	*VIC*	**471271**!
4761107	*CHRYS*	3459
47612	*VIC*	**473243**
476125	*SPG*	**416125**!
47613	*VIC*	**470380**!
476130	*SPG*	**416130**!
476135	*SPG*	**416135**!
47614	*VIC*	**411253**!
476153	*SPG*	**416153**!
47616	*VIC*	**471413**!
47618	*VIC*	**473010**!
4761B	*JN-MN*	50266
47620	*VIC*	68X90X10
4762017	*CHRYS*	39803
47621	*VIC*	226018
47622	*VIC*	475996H=
47623	*VIC*	710045
47624	*VIC*	8622
47625	*VIC*	**251511**
47626	*VIC*	5699
476271	*SPG*	**416271**!
476273	*SPG*	**416273**
47628	*VIC*	3543
476282	*TRANG*	**416282**
476288	*SPG*	**416288**!
4762899	*CHRYS*	**472572**
476294	*SPG*	**416294**!
4763	*C-R*	12X30X7
47630	*VIC*	722109

! Industrial Size/Type * Minor Width Difference $ F-M Number Is Part Of A Kit
= The U.S. customer service number is 877-4-TIMKEN. The Canadian customer service numbers are 800-565-4927 (English) and 800-565-0438 (French-Canadian).

Mfr. No.	Name	Zero Duplication or Recommended Industrial
47631	VIC	722108
47632	VIC	2300
47633	VIC	6808N
476339	SPG	**416339**
47634	VIC	370004A
476345	SPG	**416345**!
47636	VIC	476574N
476365	SPG	**417492**
47637	VIC	**415483**!
476375	WHITE	733105
47638	VIC	**470898**
47639	VIC	**471341**!
4763B	JN-MN	**473234**
47640	VIC	**470682**
47641	VIC	3385
476414	SPG	**415991**
476414	SPG	**415991**!
47642	VIC	3199
47643	VIC	3583
47645	VIC	9845
47646	VIC	**413470**!
47647	SPICE	**415082**
47647	VIC	**415082**
476470	NATL	**476470**=
47648	VIC	**451143**
47649	VIC	416426H*=
4764B	JN-MN	**473245**!
4765	C-R	12X30X7V
476512SSR	SPG	476512
476516E	SPG	85X130X13
47655	VIC	1994
47655	VIC	48X70X9!
476556	SPG	416556!
476556	SPG	**472157**
47656	VIC	1992
47656	VIC	45X65X8!
47657	VIC	473823
476573	GMC	331210V
47658	VIC	1994
47658	VIC	48X70X9!
47659	VIC	1992
4765B	JN-MN	**473445***
47660	C-R	6663S
47662	VIC	442251
476624	SPG	**416624**!
47663	VIC	**473239**
47664	VIC	**473274**!
47664	WITTE	**470625**!
47665	VIC	**418028***
47665	VIC	**418028**!
476653	SPG	**472653**!
47666	VIC	100495
47666	VIC	476023N
476664	SPG	**416664**!
476666	SPG	**416666**
47667	VIC	100494
47667	VIC	**476470**!
47668	VIC	3136N
47669	DANA	**473457**
47669	VIC	**473457**!
4767	C-R	12X30X7V
47670	C-R	455375=
47670	VIC	1953
47670	VIC	42X60X7!
47671	VIC	**3395**!
47672	VIC	3392
47673	VIC	3214
47674	VIC	225505
47674	VIC	55X70X8!
47676	VIC	28X38X7
47677	VIC	17X30X7!
47677	VIC	221720
47678	VIC	2642
47679	VIC	**472070**
476793	GMC	3732S
47680	VIC	3604
47681	VIC	712937
47682	VIC	**413246**
47683	VIC	1990
476838	NATL	**476838**
47684	VIC	710051
47685	VIC	**473442**!
47686	VIC	**471870**!
476865	SPG	**416865**!
47687	VIC	472635
47688	VIC	**450307**
476888	SPG	**416888**!
476891	SPG	**416891**!
476892	SPG	**416892**!
47690	C-R	370005A
47690	C-R	370181A
47690	C-R	380003A
47690	VIC	474133
47691	VIC	40169S
47692	C-R	370001A
47692	C-R	380001A
47692	VIC	50266
476921	SPG	**416921**!
47693	VIC	487945
47694	C-R	370003A
47694	C-R	380003A
47694	VIC	200851
47695	C-R	370003A
47695	C-R	380003A
47695	VIC	**417488**!
4769540	CONE	415185N=
4769542	CONE	**415219**=
47696	C-R	370003A
47696	C-R	380003A
47696	VIC	**472193**!
47697	C-R	370003A
47697	C-R	380003A
47697	VIC	**252277**
47698	C-R	370003A
47698	C-R	380003A
47698	VIC	710044
47699	C-R	370006A
47699	VIC	223012
47699	VIC	TCS45724
476W314	C-R	**455858**
47700	VIC	221710
47701	VIC	2011
47702	VIC	3591
47703	VIC	370003A
47703D	IH	**471765**!
47704	VIC	**471539**
47705	VIC	7568
47706	VIC	**417159**
477069SGR	SPG	**477069**
47707	VIC	3677
47707	VIC	41257!
47708	VIC	17X30X7!
47708	VIC	221720
47709	VIC	494122
4771	SPG	224270
4771	SPG	42X72X10!
47710	VIC	222540
47711	VIC	710222
47712	VIC	223608
47712	VIC	36X52X7!
47713	VIC	17X32X7!
47713	VIC	221730
47714	VIC	224255
47714	VIC	42X65X10!
47715	VIC	19X32X8
477158	SPG	**417158**!
47716	VIC	222820
47717	VIC	20X35X7!
477171	SPG	**417171**!
477172	SPG	**417172**
47718	VIC	222820
477181	SPG	**417181**!
47719	VIC	**471652**
47719	VIC	482208!
477191	SPG	**417191**
477196	SPG	**417196**!
47720	VIC	710201
477205	SPG	**417205**!
477211	SPG	**417211**!
47722	VIC	413818
47723	VIC	474133
47724	VIC	**471231**!
477241R91	IH	**415449**!
477247	SPG	**417247**!
477254	SPG	**417254**
47726	VIC	**472572**
477262	SPG	**417262**!
477278	SPG	**417278**
47728	VIC	35X50X8!
47728	VIC	3771
47728	VIC	713771
47729	VIC	227410
47730	VIC	224460
47730	VIC	44X60X10!
477307	SPG	**416624**!
477316	SPG	**417316**!
4773327	CHRYS	4525V
47734	VIC	224465
47734	VIC	44X65X10!
477343	SPG	**417343**!
477344	SPG	**417344**!
477349	SPG	**417349**!
47735	VIC	224835
477350	SPG	**417350**!
477351	SPG	**417351**!
477352	SPG	**418028**
477353	SPG	**417353**!
477354	SPG	**417354**!
477355	SPG	**417355**!
477356	SPG	**417356**!
477357	SPG	**417357**
477358	SPG	**417358**
477359	SPG	417359
477360	SPG	**417360**
477361	SPG	**417361**
477362	SPG	**417362**!
477363	SPG	417363
477364	SPG	417364
477365	SPG	**417365**
477366	SPG	**417366**!
47738	VIC	223018
47739	VIC	225010
47739	VIC	50X65X8!
47740	VIC	474134
477405641	PORSC	1012
477405641	PORSC	1012N
477405641	VW	1012
477405641	VW	1012N
47742	VIC	225010
47742	VIC	50X65X8!
47743	VIC	223235
47744	VIC	714075
47745	VIC	3459
47745	VIC	40X58X10!
47746	VIC	36X58X8!*
47746	VIC	474288
47747	VIC	222240
47747	VIC	22X40X7!
47748	VIC	800450
47749	VIC	224570
47749	VIC	45X72X12!
4774B	JN-MN	**417181**!*
47751	VIC	3774
47751	VIC	455614!
47751	VIC	TCS45473
47752	VIC	**417555**!
47753	VIC	3772
47754	VIC	710167
47755	VIC	2443
47756	VIC	**415551**
47757	VIC	**417247**!
47759	VIC	3907
4775B	JN-MN	55501=
47760	VIC	3907
47761	VIC	2506
4776142	CONE	**417571**=
47762	VIC	5604
47763	VIC	224255
47764	VIC	223010
47765	VIC	710272
47766	VIC	455625=
47767	VIC	710154
47768	VIC	19X35X10!
47768	VIC	45031S
47769	VIC	**415991**!
4776B	JN-MN	**417605**
4777086	CHRYS	320249
47771	VIC	710053
47772	VIC	**417554**!
47773	VIC	342517
4777311	CHRYS	100052T
4777311	CHRYS	5279
4777311	CHRYS	710056
47774	VIC	8660S
47775	VIC	3622
47776	VIC	710067
47777	VIC	5487
47778	VIC	6872S
47779	VIC	370005A
47780	VIC	2146
47781	VIC	**417254**
47781	VIC	5473
47782	VIC	223014
47782	VIC	30X45X5!
4778228	AMC	5414
4778228	CHRYS	5414
47783	VIC	710043
47784	VIC	710274
47786	VIC	6897=
47788	VIC	**416888**!
47789	VIC	5460
47790	VIC	**455583N**!
47792	VIC	415137*
47792	VIC	**418028**!
477936H	NATL	227045
477936HAR	NATL	227045
47795	VIC	**417506**
47795	VIC	6864S!
47796	VIC	7376=
47797	VIC	**415036**
47798	VIC	**418028**
47799	VIC	370012A
47800	VIC	370015A
47801	VIC	2055
47802	VIC	370019A
47803	VIC	370005A
47805	VIC	370021A
47805X	SPG	8370S

! Industrial Size/Type * Minor Width Difference

= The U.S. customer service number is 877-4-TIMKEN. The Canadian customer service numbers are 800-565-4927 (English) and 800-565-0438 (French-Canadian).

Mfr. No.	Name	Zero Duplication or Recommended Industrial
47807	*VIC*	8996S=
47808	*VIC*	7866S
47809	*VIC*	8549S
4780B	*JN-MN*	**417481**
47810	*VIC*	416102
47811	*VIC*	7131
47812	*VIC*	335924N
47813	*VIC*	7896S
47816	*VIC*	335924N
4781B	*JN-MN*	**415867***
478235R91	*IH*	**415449**!
47831	*HYST*	**415350**
4783B	*JN-MN*	**417481**
4784B	*JN-MN*	**415041***
4784LPD	*JN-MN*	**415041**
47852	*VIC*	9128S
478522R91	*IH*	**471692**!
47853	*VIC*	415983
47853	*VIC*	415983N!
47854	*VIC*	9773
47854SF	*VIC*	9773
47855	*VIC*	9344S
47856	*VIC*	**417499**
47857	*VIC*	416043
47859	*VIC*	200948
4785B	*JN-MN*	**416654**!
47860	*TROS*	**472311**!
47860	*VIC*	7208S
47863	*VIC*	417123*=
47864	*VIC*	2261
47864	*VIC*	231104
47865	*VIC*	476124=
478650C1	*IH*	100494
478650C1	*IH*	**476470**!
47866	*VIC*	**416557**
47866001	*VIC*	JX1137=
47867	*VIC*	416556!
47867	*VIC*	**472157**
47868	*VIC*	39723
4786OS	*JN-MN*	**415294**!
47870	*VIC*	455251H
47874	*VIC*	370132A
47875	*VIC*	722250
47876	*VIC*	370057A
47877	*VIC*	370046A
47879	*VIC*	**417506**
47879SF	*VIC*	**417506**
47880	*VIC*	370047A
47880	*VIC*	9584!
47880SF	*VIC*	370047A
47881	*VIC*	3592
47885	*DANA*	9316
47885	*VIC*	9316
47887	*VIC*	370012A
47889	*VIC*	370019A
47890	*VIC*	370195A
47891	*VIC*	386025A
47891	*VIC*	**416158**
47892	*VIC*	710056
47894	*VIC*	483488
47895	*VIC*	**417210**!
47896	*VIC*	**473459**!
47897	*VIC*	710005
478978	*C-R*	2146
47898	*VIC*	3173
47898	*VIC*	710928
47899	*VIC*	5697
4789SS	*JN-MN*	**481073**
4790	*C-R*	12X35X7!
47900	*VIC*	473677
47903	*VIC*	4127
47904	*VIC*	3896
47905	*DANA*	**415035**
47905	*DANA*	**415035**!
47905	*VIC*	**415035**
47905	*VIC*	BS40502
479061	*WHITE*	**417506**
47909	*VIC*	341022
4790B	*JN-MN*	**416865**!*
47911	*VIC*	**471442**
47912	*VIC*	473476
47913	*VIC*	455956H
47914	*VIC*	222820
47914	*VIC*	28X40X7!
47916	*VIC*	3747
47917	*VIC*	224045
47917	*VIC*	40X62X12!
47918	*VIC*	3771
47919	*VIC*	222330
47919	*VIC*	710155
47919	*VIC*	TCS45847
4791B	*JN-MN*	**415196**!
47920	*VIC*	481826
47920	*VIC*	4989
47921	*VIC*	222020
4792318	*CHRYS*	714655
47925	*VIC*	**472015**
47926	*VIC*	1198
47927	*VIC*	224025
47928	*VIC*	710060
47929	*VIC*	3655
47930	*VIC*	4040N
47931	*VIC*	713655
47932	*VIC*	**417539**!
47934	*VIC*	**470380**!
47934	*VIC*	472189A
47935	*VIC*	712005
47937	*VIC*	**471424**!
4793SS	*JN-MN*	**471538**!
47940	*VIC*	4160
47941	*VIC*	3909
47942	*VIC*	3942
47944	*VIC*	200886
47945	*VIC*	3051N
47946	*VIC*	200881
47947	*VIC*	200392
47948	*VIC*	17760
47948	*VIC*	6936S
47949	*VIC*	**417433**!
47949	*VIC*	**417433***!
4794B	*JN-MN*	**476470**
47950	*VIC*	223420
47952	*VIC*	710164
47953	*VIC*	222860
47953	*VIC*	28X47X7!
47954	*DANA*	41461S
47954	*VIC*	41461S
47955	*VIC*	710046
47956	*VIC*	3553
47958	*VIC*	8610
47959	*VIC*	223255
4795B	*JN-MN*	**415001**!
47960	*VIC*	5698
47961	*TROS*	40094S
47961	*VIC*	3667
47962	*TROS*	40097S
47962	*VIC*	222835
4796492	*CHRYS*	**417158**!
47965	*VIC*	240385
47966	*VIC*	221925
47967	*VIC*	710243
47968	*VIC*	39723
47969	*VIC*	39732
4796B	*JN-MN*	**415036**
47971	*VIC*	8316
47972	*VIC*	4099
47973	*VIC*	352637
4797334	*CHRYS*	3459
47974	*VIC*	6815
47975	*VIC*	8314
47976	*VIC*	**455005**
47980	*VIC*	203005!
47980	*VIC*	204005
47981	*VIC*	472635
4798112	*CHRYS*	710046
4798125	*CHRYS*	**472572**
47982	*VIC*	8312
4798216	*CHRYS*	5106
47983	*VIC*	370150A
47984	*VIC*	710065
47985	*VIC*	**417350**=
47987	*VIC*	3606
47988	*VIC*	4148
47989	*VIC*	470672
47990	*VIC*	**473237**
47991	*VIC*	4143
47992	*VIC*	100263
47992	*VIC*	3905
47993	*VIC*	223420
47994	*VIC*	1987
47995	*VIC*	**471950**
47997	*VIC*	710167
4799B	*JN-MN*	**415034**!
479F	*OSHKO*	**415001**!
47X62X8SB	*TRSCM*	1949
47X62X8SC	*TRSCM*	47X62X8!
47X62X8TC	*TRSCM*	47X62X8!
47X65X8SC	*TRSCM*	47X65X8
47X65X8TC	*TRSCM*	47X65X8
47X68X10SC	*TRSCM*	47X68X10!
47X68X10TC	*TRSCM*	47X68X10!
47X70X10SC	*TRSCM*	47X70X10
47X70X10TC	*TRSCM*	47X70X10
48000	*C-R*	370005A
480005	*SPG*	**471526**!
480007SK	*SPG*	**471281**!
48001	*C-R*	370005A
48001	*VIC*	200603
48002	*C-R*	370003A
48002	*C-R*	**415437**
48002	*VIC*	200752
48003	*VIC*	200885
48004	*VIC*	200887
48005	*VIC*	**455134**!
480050	*C-R*	8792S+99050
480055	*NATL*	**473215**
48006	*VIC*	2007N
48007	*VIC*	223543!
480070	*SPG*	**472185**!
480071	*SPG*	**472439**
480074	*C-R*	727410+99076
48008	*VIC*	320583
48009	*VIC*	223605
480097	*C-R*	240731+99100
480097	*C-R*	240731+99101
480098	*C-R*	470120+99101
480099	*C-R*	471224+99101
4800B	*JN-MN*	**417273**
48010	*VIC*	224100
48010	*VIC*	40X65X10!
48010	*VIC*	474161
480101N	*SPG*	**412119**
48011	*VIC*	710058
480119	*SPG*	**471442**!
48012	*VIC*	3638
480125	*C-R*	471766+99125
48014	*VIC*	1973
48014	*VIC*	48X65X10!
480141	*SPG*	**470954**!
480148	*C-R*	7692S+99149
480149	*C-R*	340136+99149
48015	*VIC*	**480581**
480150	*C-R*	9613S+99149
480151	*C-R*	51098+99149
480152	*C-R*	470380+99149
48016	*VIC*	224570
480163	*SPG*	**471766**!
480168	*C-R*	7300S+99168
48017	*VIC*	224255
480173	*C-R*	473237+99174
480176	*C-R*	204038+99174
480177	*C-R*	5000
480177	*C-R*	88176+9845
480177	*C-R*	9845+99176
48018	*VIC*	4244
480183	*SPG*	**472179**
480184	*C-R*	332062+99186
480185	*C-R*	2692+88187
480185	*C-R*	2692+99187
480185	*C-R*	5001
480186	*C-R*	2692+88187
480186	*C-R*	2692+99187
480186	*C-R*	5001
480187	*C-R*	6712NA+99187
48019	*VIC*	200854
480194	*SPG*	**473010**!
480198	*C-R*	331107N+99199
4801B	*JN-MN*	**456105**
48020	*VIC*	200861
48021	*VIC*	200133
480210	*NATL*	9376
480219	*C-R*	3103+99218
48022	*VIC*	225875
48023	*VIC*	17795
48023	*VIC*	2942
480233	*C-R*	3945+88233
480233	*C-R*	3945+99233
48023D	*IH*	**473421**
48024	*VIC*	223608
48024	*VIC*	36X52X7!
480245	*SPG*	**471795**
480249	*C-R*	415449+99250
48025	*VIC*	224560
480250	*C-R*	471271+99250
48026	*VIC*	**451845**
480260	*C-R*	475003N+99262
480261	*C-R*	418027+99262
480262	*C-R*	9773+99262
48027	*VIC*	710213
480273	*C-R*	475322N+99274
480274	*C-R*	417316+99274
480275	*C-R*	415009N+99274
480278	*C-R*	416282+99274
480281	*NATL*	7013S
48028S	*TROS*	**412920**
48029	*VIC*	223800
480293	*C-R*	35949N+99293
480293	*C-R*	4563V
480294	*C-R*	475012N+99293
480299	*C-R*	417349+99300
4802B	*JN-MN*	**415551**
480300	*C-R*	415013N+99300
480303	*C-R*	415086N+99300
48032	*VIC*	4249
480325	*C-R*	416470N+99325
48033	*VIC*	2260
480331N	*SPG*	**473452**
48034	*VIC*	200861

! Industrial Size/Type * Minor Width Difference

= The U.S. customer service number is 877-4-TIMKEN. The Canadian customer service numbers are 800-565-4927 (English) and 800-565-0438 (French-Canadian).

Mfr. No.	Name	Zero Duplication or Recommended Industrial
48035	VIC	**451817**
480350	C-R	415991N+99350
480352	SPG	**472164**!
480356V	NATL	**474278**
48036	ALLCH	**471647**
48036	VIC	**471808**!
480365	SPG	**470898**
48037	VIC	**471766**
48038	VIC	48X90X10
480380	SPG	**470380**!
48039	VIC	314259!
48041	VIC	4165V=
48041	VIC	5645
48044	VIC	3459
48044	VIC	40X58X10!
48045	VIC	313156
480450	C-R	455200+99450
48046	C-R	712449
48046	VIC	120X160X12
480479	NATL	**473445**
480479H	CONSL	**473445**
48049	VIC	710365
480494	SPG	**472164**!
4804DA	IH	80313
48050	C-R	455251H
48050	VIC	3894V
480550	SPG	710058
480550SSR	SPG	710058
480553	SPG	**471224**!
480565	SPG	**470565**!
480567	SPG	**471267**!
480567R	SPG	**471267**!
480581SSR	SPG	**480581**
480590	SPG	**470590**
48060	C-R	455251N*
480605	SPG	**470605**!
48061	VIC	3638
480625	SPG	**470625**!
48063	VIC	225020
480630	NATL	**480630**=
48064	VIC	229005
48065	C-R	455251H
48065SF	VIC	4795V
48067	VIC	**415937**
48068	VIC	39807
480682	SPG	**470682**
480685CA	SPG	225225
480685CA	SPG	52X70X8!
48069	VIC	**473241**
48070	C-R	75251S
48070	VIC	370065A
48071	VIC	370036A
48071	VIC	370349A
480712	SPG	**470712**!
48072	VIC	370037A
48072	VIC	370338A
480732VD	SPG	710164
480739VD	SPG	**473241**
48075	C-R	75251S
48075	VIC	370005A
48076	VIC	370021A
48077	VIC	386025A
48077	VIC	**416158**
48077354	GE	**471255**!
48078	VIC	370001A
48080	WAUKE	**417171**!
480821	NATL	474131
480821	NATL	7013S
48084	VIC	370023A
48085	VIC	370003A
48086	VIC	386025A
48086	VIC	**416158**
480867	NATL	**470898**
48087	VIC	370065A
48088	VIC	370036A
48088	VIC	370349A
48089	VIC	370003A
480898	SPG	**470898**
48090	VIC	370001A
48091	VIC	370023A
48092	VIC	370106A
480929	SPG	**473237**!
48093	VIC	370021A
48094	VIC	370037A
48094	VIC	370338A
48095	VIC	**416892**
48096	VIC	370047A
48097	VIC	370131A
48098	VIC	**415058**
48099	C-R	416163
48099	VIC	370069A
48099	VIC	380069A
4809OS	JN-MN	55223*=
48100	C-R	416163
48101	C-R	416163
48101	ROCKW	**470954**!
481019	SPG	**472185**!
48103	VIC	4278
481047	SPG	**471571**
481076	NATL	**471076**
4810SH	JN-MN	240119*
4810SS	JN-MN	**471442**!*
48110	DANA	710096
48110	VIC	710096
481100	SPG	**471652**
481100SSR	BRWNG	**471652**
481100SSR	BRWNG	482208!
48112	VIC	473814
481131	SPG	**473215**!
481134	NATL	**471787**!
481138	SPG	**471138**!
481139	SPG	**473239**!
481150	NATL	**473231**!
481163	NATL	**481163**!
481163	NATL	50319
481163	NATL	6759S
481181	NATL	**481181**
481181	SPG	**481181**!
481181SSR	SPG	**481181**!
481190A	FORD	**471316**
481190A1	FORD	**471316**
481190A2	FORD	**471316**
481191VJR	SPG	481191V
481192	SPG	**471192**
481193N	SPG	**471193**
48120	TROS	7780
481213	NATL	470328
481224	SPG	**471224**!
481255	SPG	**471255**!
481264	SPG	**471264**!
481267	SPG	**471267**!
481268	SPG	**472258**!
48127	VIC	17780
48127	VIC	6636S
481271	SPG	**471271**!
481272	NATL	**471272**!
481279	NATL	**472213**
481289	SPG	1999
48129	VIC	3945
481294	SPG	**471526**!
48130	VIC	710091
481305R	SPG	**473454***
481305RAR	SPG	**473454***
481308	SPG	**470380**!
48131	VIC	4122
48131	VIC	470547
481316	SPG	**471316**
48132	VIC	4503N
48133	VIC	714503
48135	VIC	4141
48135A	RELEE	**417343**!
48135AD	RELEE	**417366**!
48135B	RELEE	450260
48135D	RELEE	**473438**
48135E	RELEE	**471766**!
48135F	RELEE	**415458**!
48135G	RELEE	**472924**!
48135H	RELEE	**413469**!
48135J	RELEE	**412943**
48135K	RELEE	**473213**!
48135L	RELEE	**415001**!
48135M	RELEE	**415960**!
48135N	RELEE	**411394**!
48135P	RELEE	**472185**!
48135S	RELEE	**412119**!
48135T	RELEE	**417073**
48135U	RELEE	**415988**
48135V	RELEE	**472572**!
48136	VIC	5133
48136X	RELEE	**476470**
48137	VIC	487945
48138	VIC	**416706**!
481384	NATL	**480581**
48139	VIC	710179
481397	BRWNG	**481397**
48140	VIC	224255
48141	VIC	710106
481410	AM HO	**417546**!
481413	NATL	**471413**!
481420	AM HO	**416107**!
481420	AM HO	455073
481420	SPG	481420
481424	SPG	**471424**!
48143	VIC	710101
48144	VIC	4525V
481442	SPG	**471442**!
481443	NATL	**481443**
481446	AM HO	**412871**!
48145	VIC	370048A
48145	VIC	380048A
48146	VIC	370033A
481466	SPG	**471466**!
48147	VIC	370008A
481472	SPG	**471472**!
48148	VIC	370006A
48149	VIC	**417506**
48150	C-R	345214=
481504	SPG	**471504**
48152	C-R	345214=
48152	VIC	**472258**
481526	SPG	**471526**!
48153	VIC	**470460**
481538VGR	SPG	**471538**
48154	VIC	**415023**
48155	VIC	**417073**
481551	SPG	**471551**!
481554	SPG	**471554**!
48156	VIC	**417171**!
481564	SPG	**471564**
481567	SPG	**471567**!
481568	NATL	**481568**
48157	VIC	473451!
481570	SPG	**471570**!
481577	AM HO	**417357**
481577	AM HO	455192!
48158	VIC	**455144**
48159	VIC	**416156**
4815B	JN-MN	**415001**!
48160	VIC	7568
48161	TROS	1035=
48161	VIC	710105
48162	TROS	**416664**!
48163	VIC	4762N
481643	SPG	**471643**!
481646	SPG	**471646**!
481649	SPG	**471649**!
48166	VIC	4539H
48167	VIC	4189H
481689	SPG	**471689**!
481692	SPG	**471692**!
4816B	JN-MN	**415437***
481733	SPG	**471733**
481737	SPG	**471737**
48174	C-R	456890
48175	C-R	456890
48176	C-R	456890
48176	VIC	320259
481763	SPG	**471763**
481765	SPG	**471765**!
481766	SPG	**471766**!
48177	VIC	340835
48178	VIC	**412920**
48179	VIC	**472258**!
481795	SPG	**471795**
48180	VIC	710388
48181	VIC	223012
48182	VIC	7412S
48183	VIC	710389
48184	VIC	7692S
481847R91	IH	203006!
481859SSR	BRWNG	481859
48186	VIC	**471645**
48187	VIC	204013
481883	SPG	**471870**!
48189	VIC	**473215**!
48191	VIC	**473242**
48192	VIC	**473458**!
48192	VIC	**473458**!
48194	VIC	**473517**!
48195	VIC	**253099**!
48196	VIC	**472287**!
48198	VIC	**474256**!
48199	VIC	**473205**!
4819989	ALLCH	**472636**!
4819990	ALLCH	416556!
4819990	ALLCH	**472157**
4819991	ALLCH	J1130
48200	VIC	**481792**
482005	SPG	**473240**!
482009	SPG	**472397**!
48201	VIC	**472560N**
482015	NATL	**472015**!
482016	SPG	**472016**!
482018	SPG	**472018**
48202	VIC	**471570**!
482020	SPG	472020
482029	SPG	**472029**
48203	VIC	**473380**
48204	VIC	**471633**!
48205S	TROS	41461S
48206	VIC	**472185**
48207	VIC	416961=
48208	VIC	444042!
48210	VIC	**471808**!
48211	VIC	**471137**
48212	VIC	710204
482125	NATL	**470954**
482125	SPG	**480821**!

! Industrial Size/Type * Minor Width Difference

= The U.S. customer service number is 877-4-TIMKEN. The Canadian customer service numbers are 800-565-4927 (English) and 800-565-0438 (French-Canadian).

Mfr. No.	Name	Zero Duplication or Recommended Industrial
48213	VIC	**472572**
48214	C-R	**418028**
482144	SPG	**472144**!
482163N	NATL	**482163**
482163SSR	SPG	**482163**!
482164	SPG	**472164**!
48217	VIC	4333N
482179	SPG	**472179**
48218	VIC	4370N
482185	SPG	**472185**!
4821B	JN-MN	**455121**
48220	VIC	240462
48220S	TROS	6643S
48221	VIC	340817
482213	SPG	**472213**
48221S	TROS	7154S
48222	VIC	340853
48224	VIC	**415034**!
48225	DANA	719316
48225	SPICE	719316
48225	VIC	**415302**
482258	SPG	**472258**!
48226	VIC	**450341**
48227	VIC	**450362**
482278	SPG	**471413**!
48228	C-R	**451583**!
48229	VIC	**471612**
482299	SPG	**472299**
482299RA	SPG	**472299**
48230	VIC	**471736**
48231	VIC	**471887**
482319	SPG	**472319**
48232	VIC	25X62X10
48233	VIC	**472954**
48234	VIC	**473225**!
48235	VIC	**473233**!
48236	VIC	**473450**!
48237	VIC	**473455**!
48238	VIC	**473474**
48239	VIC	**474261**
482393R1	IH	240735
482394	SPG	**472394**
482397	SPG	**472397**!
48240	VIC	25X52X10
482401	NATL	**473367**
48241	VIC	710152
48242	VIC	710136
48243	VIC	710182
482435+9434	NATL	5397$
482439	SPG	**472439**
48245	VIC	710228
48246	VIC	710199
48247	VIC	222510
482475	SPG	**472475**
48248	VIC	223253
482492	SPG	**472492**!
4824B	JN-MN	**416888**!
48250	C-R	455614
48251	VIC	223831
48253	VIC	4904
48254	VIC	1981
48255	VIC	3622
482554RB	SPG	**474276**
48256	VIC	710103
482572	SPG	**472572**!
48258	VIC	710146
48259	VIC	225230
4825LUP	JN-MN	**476842**
48260	VIC	225450
48261	VIC	223230
48262	VIC	710241
482636	SPG	**472636**!
48266	VIC	4532N
48267	VIC	**416892**
48269	VIC	800550
48269	VIC	800551
4826B	JN-MN	**472397**!
48271	VIC	3896
48272	VIC	4739
48273	VIC	4857
48274	VIC	710270
48277SF	VIC	9845
48278	VIC	370019A
4827B	JN-MN	**473446***
48281	VIC	710414
48282	VIC	710413
48284	VIC	**417505**
48285	VIC	224010
48286	VIC	223520!
48287	VIC	2081
48287	VIC	455511
48289	VIC	710335
48292	DANA	710452
48292	SPICE	710452
48292	VIC	100497V
48292	VIC	4431V
48292	VIC	9316
482920	SPG	**412920**!
482924	SPG	**472924**!
48297	C-R	370027A
482971SSR	SPG	482971
48298	C-R	AR20+370004A
48299	C-R	370027A
483	KRSE	**411376**!
48300	VIC	2457
483010	SPG	**473010**!
483016	SPG	**473016**!
48302	VIC	**473442**!
48304	VIC	**482163**!
48305	VIC	4528N
483054RRR	SPG	483054N
483054VDR	SPG	483054V
48307	VIC	714679
48308	VIC	4598
48311	WAUKE	**471570**!
48312	VIC	224250
48313	VIC	**471424**!
48316	VIC	710304
48317	VIC	9150S
4831CAR	SPG	710005
48320	VIC	15X26X7
483203	SPG	**473203**
483204	SPG	**473204**
483205	SPG	**473205**!
483210	SPG	**473210**
483211	SPG	**473211**!
483212	SPG	**473212**!
483213	SPG	**473213**!
483214	SPG	**473214**!
483215	SPG	**473215**!
483224	SPG	**473224**!
483225	SPG	**473225**
483226	SPG	**473226**
483227	SPG	**473227**!
483228	SPG	**473228**!
483229	SPG	**473229**!
483230	SPG	**473230**!
483231	SPG	**473231**!
483232	SPG	**473232**!
483233	SPG	**473233**!
483234	SPG	**473234**!
483235	SPG	**473235**!
483236	SPG	**473236**!
483237	SPG	**473237**!
483238	SPG	**473238**!
483239	SPG	**473239**!
483240	SPG	**473240**!
483241	SPG	**473241**
483242	SPG	**473242**
483243	SPG	**473243**
483244	SPG	**473244**!
483245	SPG	**473245**!
483246	SPG	**413246**
483246N	WMG	**413246**!
483247	SPG	**413247**!
483248	SPG	**413248**
48326	VIC	470059
48327	VIC	370051A
48328	VIC	**416865**
48329	VIC	370078A
48330	VIC	370094A
48331	VIC	370119A
48332	VIC	370199A
483323VGO	SPG	**471272**
48333	VIC	370211A
48335	VIC	370219A
48336	VIC	370220A
48340	AMC	5759=
48340	TROS	**450776**!
48341	VIC	**415483**
48342	AMC	**471827**
48343	AMC	**471141**!
48343	VIC	15X32X8
4834772	ALLCH	**455151**
483481	NATL	**471766**!
483481	SPG	**471766**!
483485	SPG	40769S
4834LA	JN-MN	470059
4834LA	JN-MN	**470380**!
48351	VIC	**415449**!
48352	VIC	710268
48353	VIC	417987N
48354	VIC	710275
48355	VIC	455031!
48356	VIC	**415991**
48358	VIC	**412861**
483591	FORD	**472560N**!
48362	VIC	711553
48363	VIC	710171
48365	VIC	473336
4837B	JN-MN	455136
4838	HYST	**415035**
4838	HYST	**415035**!
483801	SPG	1949
483856	ALLCH	**415577**
4838563	ALLCH	**415577**
48387	VIC	TCS45939
4838B	JN-MN	**473450**
4840LA	JN-MN	**417082***
484103SGR	SPG	224470
484103SGR	SPG	44X72X10!
484132SSR	SPG	710053
4842LA	JN-MN	**471649**!
4843	SKIL	**471231**!
484320	C-R	55353
48440	TROS	6127
48460	TROS	**472258**!
48464	TROS	**473419**
484766R91	IH	204008
48498D	IH	**416444**
484W316-M1	C-R	6638S*
485011	SPG	**416921**!
4850132	ALLCH	**415645**!
4850132	ALLCH	455104
485031	SPG	455031!
48504	TROS	**416273**!
485072	SPG	**415072**
4850LA	JN-MN	**473016**!
4850LPD	JN-MN	**473016**!
4851	DIVCO	**416738**!
4851	DIVCO	450096
485138	SPG	**415138**!
48513D	IH	**473215**!
485146	SPG	**415991**
485146	SPG	455146!
485147	SPG	**415449**!
48518D	IH	**412119**
48519	TROS	**416339**
48519	TROS	455031!
485196	SPG	**415196**!
485197HAR	SPG	485197H=
48519D	IH	**473228**!
4852214	ALLCH	**415437**
485259	LF-PT	**415259**!
485303	SPG	**415303**!
485304	SPG	**476470**
485306R1	IH	**471643**!
485364	SPG	**416664**!
485379	SPG	**415379**
48539D	IH	200600
4854	SPG	1981
485406VD	SPG	2377
485437	SPG	**415437**
485449	SPG	**415449**!
485458	SPG	**415458**!
485483	SPG	**415483**
48549	HYST	**471192**
485497	SPG	**417355**!
485497	SPG	485497
485497X54	SPG	**417355**!
485497X54	SPG	485497
4856336	AMC	4857
4856336	CHRYS	4857
485645	SPG	**415645**!
485697	SPG	**415697**!
4856LA	JN-MN	**471750**!
485725	SPG	**415725**!
485836	SPG	**415995**!
485836	SPG	**415995**!
485894	SPG	**412473**!
485921N	NATL	**413246**
485937	SPG	**415937**!
485953	SPG	**415035**
485960	SPG	**415960**
485984	SPG	**415984**!
48600	VIC	**350364**
486011	SPG	**417621**!
486023	SPG	**417349**!
48603	VIC	50010
486041	SPG	416041
486047	SPG	**416332**!
48605SA	TRSCM	**416167**
48606	VIC	50199S!
48606	VIC	6863S!
48607	VIC	50199S!
48607	VIC	6863S!
48609	VIC	320457
4860S	SPG	8312
4860SCR	NATL	8312
4860SCR	SPG	8312
48610	VIC	**470004**!
486107	SPG	**416107**!
48612	VIC	320457
486125	SPG	**416125**!
48613	VIC	**471526**!
486130	SPG	**416130**!
486135	SPG	**416135**!
48615	VIC	**471472**!

! Industrial Size/Type * Minor Width Difference $ F-M Number Is Part Of A Kit
= The U.S. customer service number is 877-4-TIMKEN. The Canadian customer service numbers are 800-565-4927 (English) and 800-565-0438 (French-Canadian).

Mfr. No.	Name	Zero Duplication or Recommended Industrial
486153	SPG	**416153**!
48615TA	TRSCM	417267
48617	VIC	**471549**!
48618	VIC	**471442**!
48619	VIC	**471530**
4862	ROCKW	**410496**!
48620S	TROS	**474276**!
48622	VIC	**472705**!
48623	VIC	**471535**!
48624	VIC	**471551**!
48625	VIC	**471532**
48625TA	TRSCM	**417269**!
48626	VIC	**473405**
48627	VIC	**471558**
486271	SPG	**416271**!
486273	SPG	**416273**
48628	VIC	**481073**
486288	SPG	**416288**!
48629	VIC	**471538**!
486294	SPG	**416294**!
4862LA	JN-MN	**472164**!
48630	VIC	**471579**
48632	VIC	**470954**!
486320L	C-R	**417355**!
486320L	C-R	485497
486339	SPG	**416339**
48634	VIC	**480821**!
486345	SPG	**416345**!
48636	VIC	**471498**
48637	VIC	**471684**!
48638	VIC	450033
48639	VIC	**481443**!
4863LA	JN-MN	**471141**!
48640	VIC	**481568**!
48640S	TROS	**415449**!
48641	VIC	471337
486414	SPG	**415991**!
486414	SPG	**415991**
48642	VIC	**474273**
48643	VIC	**471645**
48644	VIC	471686
48645	VIC	473412
48646	VIC	473413
48647	VIC	473414
48649	VIC	**473415**
4864LA	JN-MN	**455583N**!
4864LUP	JN-MN	**455583N**!
48650	VIC	**471267**!
48651	VIC	**471633**!
48652	VIC	**470590**
48653	VIC	**471137**
48654	VIC	**471730**
48654S	TROS	**417344**!
48655	VIC	**471730**
486556	SPG	416556!
486556	SPG	**472157**
48657	VIC	**471649**!
48659	VIC	450038
48660	VIC	**471571**
48661	VIC	**471647**
48662	VIC	472951
48662	VIC	**474252**
486624	SPG	**416624**!
48664	VIC	**451583**!
48665	VIC	**471648**
48666	VIC	**471688**
486664	SPG	**416664**!
486666	SPG	**416666**
48667	VIC	**472311**!
48668	VIC	**471733**
48669	VIC	**471744**!
4866B	JN-MN	**472029***
48670	VIC	50209
48671	VIC	481650
48676	VIC	**471272**!
48677	VIC	**471651**
48678	VIC	**471705**!
48679	VIC	**471735**
4867B	JN-MN	**417507**!
4867B	JN-MN	**417507**
4867D5	DIA	**417487**
4867D5	DIA	**417487**!
48680	VIC	**450342**
48681	VIC	**471762**!
48682	VIC	**471762**!
48683	VIC	450044
48686	VIC	450159
486865	SPG	**416865**!
48687	VIC	**350974**!
48688	VIC	**470712**!
486888	SPG	**416888**!
48689	VIC	**471747**!
486891	SPG	**416891**!
486892	SPG	**416892**!
4868B	JN-MN	**472636**!
48690	C-R	370195A
48690	VIC	**471785**!
48691	C-R	370195A
48691	VIC	473428
486910602	FORD	8316
48692	VIC	**471764**!
486921	SPG	**416921**!
48693	C-R	**416167***
48693	C-R	**416167**!
48694	C-R	**416167**!
48694	VIC	453063
48695	C-R	**416167**!
4869546	GE	**481073**
48696	VIC	**473205**
48697	C-R	5010=
48697	VIC	**474254**!
48697	VIC	**474254***
48698	VIC	**450173**
48699	TROS	**473239**!
486C328	C-R	**417211**!
48700	C-R	**416167**!
48701	C-R	**416167**!
48701	TROS	5452
48702	VIC	**471787**!
48703	VIC	450177
48704	VIC	470050
48704D	IH	80313
48705	VIC	**473424**!
48706	VIC	450124=
4870S	SPG	710091
4870SCR	NATL	710091
48710	VIC	**473421**
48711	VIC	**473212**!
48713	VIC	473436
48715	VIC	450054
487158	SPG	**417158**!
48716	VIC	**470774**!
487171	SPG	**417171**!
487172	SPG	**417172**
487181	SPG	**417181**!
487191	SPG	**417191**
487196	SPG	**417196**!
487205	SPG	**417205**!
48721	VIC	50254=
487211	SPG	**417211**!
48722	VIC	**473016**!
48724	VIC	**474264**
487247	SPG	**417247**!
48725	C-R	417267
487254	SPG	**417254**
48726	C-R	417267
48726	VIC	**473439**!
487262	SPG	**417262**!
48727	VIC	**470625***
48727	VIC	**470625**!
487278	SPG	**417278**
4873	C-R	455820
48730	TROS	**471763**
48731	TROS	**474274**
487314	C-R	417494
487314M1	C-R	417494
487316	C-R	**417198**
487316	SPG	**417316**!
487318	C-R	417498
487318M1	C-R	417498
487320	C-R	**417355**!
487320M1	C-R	**417355**!
487324	C-R	**417205**!
487324	GR-DV	**417205**!
487324	HYST	**417205**!
487324M1	C-R	**417205**!
487326	C-R	**417504**
487326M1	C-R	**417504**
487328	C-R	**417211**!
487328	GR-DV	**417211**!
487328M1	C-R	**417211**!
48733	TROS	**416345**!
48733	TROS	455033
48733	VIC	**472299**
487330	C-R	**417967**!
487330M1	C-R	**417967**!
48734	VIC	**472299**
487343	SPG	**417343**!
487344	SPG	**417344**!
487349	SPG	**417349**!
487350	SPG	**417350**!
487351	SPG	**417351**!
487352	SPG	**418028**
487354	SPG	**417354**!
487355	SPG	**417355**!
487356	SPG	**417356**!
487357	SPG	**417357**
487358	SPG	**417358**
487359	SPG	417359
48736	VIC	**482253**
487360	SPG	**417360**
487361	SPG	**417361**
487362	SPG	**417362**!
487363	SPG	417363
487364	SPG	417364
487365	SPG	**417365**
487366	SPG	**417366**!
48737	VIC	451469
48738	TROS	**471570**!
48738	VIC	**473010**
48739	VIC	**474274**
4873LA	JN-MN	**417570**
4873LUP	JN-MN	**417570**
4874	C-R	**415187**
4874	GR-DV	**415187**
4874	HU-WR	**415187**
48741	VIC	450260
48743	VIC	450073
48744	VIC	450284=
48746	VIC	**473446**
48747	VIC	470086
48748	VIC	**450068**
48749	VIC	50191
4874G	CLARK	**415187**
4874RX	SPG	4874N
48750	C-R	417267
48750	VIC	50081
48751	VIC	**450400**
48752	VIC	**472164**
48753	VIC	**471141**!
48754	VIC	**473313**
48755	VIC	50266
48756	VIC	450269
48757	VIC	450285
48759	VIC	450089
4875RX	SPG	**476470**
48760	VIC	**472070**
48761	VIC	**473449**!
48763	VIC	**450090**
48763S	TROS	**472157**
48764	VIC	473451!
48766	VIC	**473452**
48766	VIC	714675
48767	VIC	473453
48768	C-R	**417269**!
48769	C-R	**417269***
48769	C-R	**417269**!
48769	VIC	**471868**
4876RX	SPG	4876N
48771	VIC	**473240**!
48772	VIC	**410524**
48775	C-R	**417269**!
48776	C-R	**417269**!
48776	VIC	**473461**!
48776D	IH	**417316**!
48777	VIC	**471391**!
48779	VIC	**472492**!
48781	VIC	**473242**
48783	VIC	450311
487845R	SPG	475845
48785	VIC	**473471**
48786	VIC	**471272**!
48787	VIC	455136
48788	VIC	**415234**!
48789	AM WH	**472439**
48789	VIC	55337
4879	HEIL	**415449**!
4879	STN-S	**415449**!
48790	AM WH	**470088**
48790	VIC	**411394**!
487908	GMC	332062
48791	VIC	**411394**!
48792	C-R	370057A
48792	VIC	**416444**
48793	VIC	**416271**!
48794	C-R	370007A
48794	VIC	**470605**!
48795	VIC	**417079**
48796	C-R	370057A
48796	VIC	**417343**!
48798	VIC	**455005**
48799	VIC	**417134**
487B324	C-R	**417205**!
487F324	C-R	**417205**!
487GA	C-R	45187S
487W3	C-R	455820
487W314	C-R	417494
487W316	C-R	**417198**
487W328	C-R	**417211**!
487W4	C-R	**415187**
48800	VIC	**417486**
48801	VIC	**415995**!
48802	VIC	**417351**!
48803	VIC	**417488**!
48804	VIC	**415088**
48804	VIC	**415088**!
48805	VIC	55155=
48806	VIC	455015

! Industrial Size/Type * Minor Width Difference

= The U.S. customer service number is 877-4-TIMKEN. The Canadian customer service numbers are 800-565-4927 (English) and 800-565-0438 (French-Canadian).

Mfr. No.	Name	Zero Duplication or Recommended Industrial
48808	VIC	417490
48809	VIC	**416292**
4880LA	JN-MN	**471255**!
4880LUP	JN-MN	**471255**!
48810	VIC	**417491**
48811	VIC	**415085**!
48811	VIC	456648
48812	VIC	**417191**
48812	VIC	455165!
48813	VIC	**417492**
48814	VIC	240435
48816	VIC	240435
48817	VIC	**330385**
48819	VIC	340771
4881A	HERCU	**472636**!
4881LA	JN-MN	**417551**
48821	VIC	**471264**
48823	VIC	**254287**!
48824	VIC	40208
48825	VIC	**471224**!
48827	VIC	**472560N**
48828	VIC	43069S
48829	VIC	43076S
48830	VIC	**471766**
48832	VIC	**471192**
48834	VIC	43078S
48835	VIC	43074S
48836	VIC	40568S
48837	VIC	**474272**!
48837	VIC	**474272***
48838	VIC	40627S=
4883964AA	CHRYS	800550
4883B	JN-MN	**413478***
4883S	SPG	1956
48841	VIC	**412920**!
4884B	JN-MN	**473461**!
4884S	SPG	224400
48850	VIC	**455019**!
48851	VIC	470165
48852	VIC	455024
48853	VIC	**417354**!
48854	VIC	**417493**
48855	VIC	**455026**
48856	VIC	**415711**
48857	VIC	417497
48858	VIC	417498
48859	VIC	417498
4885B	JN-MN	**473313**
4885S	SPG	710092
48860	VIC	**415937**!
48861	VIC	**417501**
48863	VIC	55030
48864	VIC	**415379**!
48864	VIC	**415379**
48865	VIC	**417205**!
48866	VIC	**415150**!
48867	VIC	455178=
48868	VIC	**417504**
48869	VIC	**455032**!
48870	C-R	370005A
48870	VIC	**417210**!
48871	VIC	**417366**!
48872	VIC	**417967**!
48873	VIC	**455191**
48874	VIC	**417357**
48874	VIC	455192!
48875	VIC	**417357**
48875	VIC	455192!
48876	VIC	**415036**
48877	VIC	**417509**
48878	VIC	55193=
48879	VIC	455037
48880	C-R	455614
48882	C-R	370005A
48883	C-R	7866S
48883	VIC	**415142**
48884	C-R	370121A
48884	VIC	**417512**
48885	VIC	455203
48886	C-R	370057A
48886	C-R	380003A
48886	VIC	455056
48887	VIC	**455194**
48888	HYST	**330385**!
48888	VIC	417513
48889	VIC	**417514**
48890	VIC	417515
48891	VIC	**472157**
48892	VIC	**415196**!
48893	VIC	**416891**!
48894	VIC	**415045**!
48895	VIC	**416137**
48896	VIC	455197N
48897	VIC	**417520**
48898	VIC	**455026**
48899	VIC	**417238**
488H320M1	C-R	**417355**!
488H320M1	C-R	485497
488WL316-M1	C-R	**417196**!*
4890	MID	240735
48903	VIC	**415047**
48904	VIC	**416149**
48905	VIC	415060
48905	VIC	455060
48906	VIC	55199=
48907	VIC	**417525**
48908	VIC	417526
48909	VIC	**415351**!
48910	VIC	**416153**!
48911	VIC	**416154**!
48912	VIC	55539=
48913	VIC	**417533**
48914	VIC	417534
48915	VIC	457585
48916	VIC	**416158**
48917	VIC	415064
48918	VIC	417535
48919	VIC	417536
48920	VIC	416163
48921	VIC	456890
48922	VIC	**416167**!
48923	VIC	417267
48924	VIC	**417269**!
48925	VIC	**417539**!
48926	VIC	**417273**
48927	VIC	**415645**!
48927	VIC	455104
48929	VIC	**417556**
48931	VIC	**417562**
48932	VIC	**417563**
48933	VIC	**417298**
48934	VIC	**417596**
48935	VIC	**455584**
48935K	IH	50081
48936	VIC	**416077**
48937	VIC	**415116**
48938	VIC	**455117**
48939	VIC	**415551**
48940	VIC	**417598**
48941	VIC	**455406**!
48942	VIC	**455121**
48943	VIC	**417602**!
48944	VIC	**455123**
48946	VIC	**417604**
48947	VIC	**417567**
48948	VIC	**415128**
48949	VIC	**415090**
48950	VIC	55218=
48951	VIC	**415219**
48953	VIC	**417606**
48954	VIC	55222=
48954D	IH	**472287**!
48955	VIC	55223=
48956	VIC	55224=
48956D	IH	**471649**!
48957	VIC	**417020**
48958	VIC	**417570**
48959	VIC	**415227**!
48960	TROS	1020
48961	VIC	**415482**
48962	VIC	**415076**
48963	VIC	**417608**
48967	VIC	**472193***
48967	VIC	**472193**!
48968	VIC	**330385**
4896902	ALLCH	**411376**!
48971	VIC	415064
4897297AA	CHRYS	713103
48X62X8	NATL	1188
48X62X8SB	TRSCM	1188
48X62X8SC	TRSCM	48X62X8!
48X62X8TC	TRSCM	48X62X8!
48X63X11SM	TRSCM	1969
48X63X9SC	TRSCM	48X63X9!
48X63X9TC	TRSCM	48X63X9!
48X65X10SC	TRSCM	48X65X10!
48X68X10SC	TRSCM	48X68X10!
48X68X10TC	TRSCM	48X68X10!
48X70X8	ISP	48X70X8
48X70X9SC	TRSCM	48X70X9!
48X70X9TC	TRSCM	48X70X9!
48X72X7SC	TRSCM	48X72X7!
48X72X7TC	TRSCM	1208
48X72X7TC	TRSCM	48X72X7!
48X75X10SC	TRSCM	48X75X10
48X75X10TC	TRSCM	48X75X10
48X80X8SC	TRSCM	48X80X8
48X80X8TC	TRSCM	48X80X8
48X90X10SC	TRSCM	48X90X10
48X90X10TC	TRSCM	48X90X10
49	UNIVE	**474277**
49001	VIC	5070
49002	VIC	5246
49011	VIC	**473450**!
4901LA	JN-MN	455509
4902	KELSE	200354
49022	TROS	5M81
49024	VIC	**416738**!
49025	VIC	**473367**!
49026	VIC	**415007**
49027	VIC	**416921**!
49029	TROS	5M89
49029	VIC	450044
4902LA	JN-MN	**417546**!
4902LUP	JN-MN	**417546**!
49035	VIC	**473239**
49039	VIC	7600S
4903CA	SPG	710158
49041	VIC	**471750**!
49042	CATER	**470590**
49042	VIC	**471354**!
49046	VIC	55367=
49050	C-R	370003A
49050	C-R	380003A
490576C92	IH	370124A
490577C92	IH	370131A
4905CA	SPG	710146
49061	VIC	**470380**!
49070	TROS	5M289
49071	TROS	5M293
49071	VIC	40337S
4907118	ALLCH	**416297**
49075	VIC	**471827**
49081	VIC	**473471**
49082	TROS	5M356
49086	VIC	**470954**!
49089	VIC	**411253**!
4909	C-R	342805
49092	VIC	**481864**
49094	TROS	5M403
49095	TROS	5M406=
49098	VIC	**450593**!
49098	VIC	**450593**
49099	VIC	**450084**!
4910	C-R	342805
49101	VIC	**414045**!
49103	TROS	5M445
49105	VIC	5711
49106	VIC	**472394**
49109	VIC	**450666**
4910B	JN-MN	**455356**
4911	C-R	342805
4911	LABEQ	**471760**
49110	VIC	40154S
4911035	WOOL	55441=
49111	VIC	**471570**!
49112	VIC	**473444**
49113	SUL	**472924**!
49113	VIC	**472924**!
49114	VIC	**474265**
49114-56B00	SUZUK	221730
49114-56B20	SUZUK	221730
49114-60A00	SUZUK	221730
49116	TROS	5M466
4911630	ALLCH	**473459**
4911B	JN-MN	**455032**!
4912	C-R	340847!
4912	C-R	8792S*
4912	LABEQ	**415449**!
49120	TROS	**473235**
49122	VIC	**473441**
49124	VIC	**473450**!
49128	TROS	5M497
49128	VIC	**474281**!
4912B	JN-MN	**415442**!
4912B	JN-MN	55442
4913	C-R	340847
4913	C-R	43095S!*
4913	LABEQ	**473236**!
49130	VIC	**473442**!
49133	VIC	**472287**!
49136	TROS	5M544
49136	VIC	6356
49137	TROS	5M559
49138	TROS	5M643
4914	LABEQ	**415991**
4914	LABEQ	455146!
49140	VIC	**471866**!
49141	VIC	**471341**!
49143	VIC	470950!
49143	VIC	6241S
49144	VIC	450111
49146	VIC	**471868**
49149	VIC	**473467**
49149	VIC	**473467**!
49150	VIC	**473228**!
49150SF	VIC	**473228**!
49153	SPICE	714675

! Industrial Size/Type * Minor Width Difference

= The U.S. customer service number is 877-4-TIMKEN. The Canadian customer service numbers are 800-565-4927 (English) and 800-565-0438 (French-Canadian).

Mfr. No.	Name	Zero Duplication or Recommended Industrial
49153	*TROS*	5M867
49160	*TROS*	**471192**
49161	*VIC*	5778
49162	*TROS*	6489
49163	*VIC*	42127S
49164	*VIC*	**473464**!
49164	*VIC*	**473464**
491656C1	*IH*	3292
49168	*VIC*	**415458**!
49170	*VIC*	**415007**
49171	*TROS*	5MR71
49171	*VIC*	**470334**!
49172	*TROS*	5MR1008
49173	*TROS*	5MR1009
49173	*VIC*	**473473**
49174	*VIC*	**417073**
49176	*TROS*	5MR1300
49176	*VIC*	5756
49177	*TROS*	5MR1301
49177	*VIC*	**471795**
49177D	*IH*	**472439**
49178	*VIC*	40769S
49180	*VIC*	450073
49182	*VIC*	**415960**
49184	*VIC*	**410190**
49187	*VIC*	**471316**
49189	*VIC*	**473215**!
4918LA	*JN-MN*	**471554**!
49190	*VIC*	5790=
49191	*VIC*	**450065**
49193	*TROS*	**415196**!
49195	*VIC*	**473440**
49197	*VIC*	**473450**
49198	*VIC*	**415001**!
49199	*VIC*	**472636**!
4919B	*JN-MN*	**474265**
49202	*VIC*	240023
49203	*VIC*	**471571**
49206	*VIC*	**413469**!
49208	*C-R*	710405
49208	*VIC*	**455280**
49209	*VIC*	6241S
49210	*C-R*	125X150X12!
49210	*C-R*	231250
49211	*C-R*	125X150X12V
49211	*VIC*	**473214***
49211	*VIC*	**473214**!
49212	*VIC*	**470354**
49213	*C-R*	125X150X12!
49213	*C-R*	231250
49214	*C-R*	125X150X12V
49214	*VIC*	**473450**!
49215	*C-R*	125X150X12!
49215	*VIC*	**472179**
49216	*VIC*	**455336**
49218	*VIC*	43071S
49219	*VIC*	**471141**!
4921B	*JN-MN*	**471554**!
49222	*VIC*	**470898**
49223	*VIC*	**472409**!
49224	*VIC*	**472185**!
49225	*VIC*	**414045**!
49226	*VIC*	6064
4923	*C-R*	312196!
49230	*VIC*	7216
492300C1	*IH*	446927!
49232	*VIC*	450274
492324L	*C-R*	55329=
49233	*VIC*	**473228**!
49234	*ALLCH*	**471570**!
49234	*VIC*	**473179**!
49235	*VIC*	5070
49236	*VIC*	6064
49237	*VIC*	5836
49238	*VIC*	**473462**
49239	*VIC*	**471442**!
49240	*C-R*	125X155X12
49240	*VIC*	**471787**
49242	*VIC*	**415449**!
49243	*C-R*	125X155X15*
49244	*C-R*	7886S
49247	*VIC*	**471827**
49248	*VIC*	40369S
4925	*C-R*	342613
4925	*EATON*	**412871**!
4925	*FULLE*	**412871**!
49250	*C-R*	**417539**!
49251	*C-R*	**417539**!
49252	*VIC*	**450765**!
49257	*VIC*	**471103**!
49258	*VIC*	40286
49259	*VIC*	40370S
49263	*VIC*	**410496**!
49264S	*TROS*	**416271**!
49268	*C-R*	125X160X12!
49268	*VIC*	**455008**
49269	*VIC*	**410987**!
49270	*C-R*	125X160X12
49270	*VIC*	**473447**
492702	*NATL*	4148
49271	*VIC*	**410694**!
49272	*VIC*	**473232**
49273	*VIC*	**473238**
49274	*VIC*	**416921**!
49276	*VIC*	**412119**!
49277	*VIC*	**415995**!
49278	*VIC*	**473427**
49279	*VIC*	**416738**!
49279	*VIC*	450096
49280	*VIC*	**470530**!
492805	*WHITE*	**415449**!
49282	*VIC*	**473473**
49283	*VIC*	**472144**!
49285	*VIC*	**473438**
49287	*VIC*	**473426**
49288	*VIC*	**471466**!
49289	*VIC*	**476838**!
49290	*C-R*	125X170X15*
49290	*VIC*	**415001**!
49291	*VIC*	**417344**!
49292	*VIC*	50631
49293	*VIC*	**471442**!
49294	*VIC*	**471554**!
49295	*VIC*	**471224**!
49296	*VIC*	**473419**
49297	*VIC*	**470334**!
49298	*VIC*	**415988**
49299	*SPICE*	710453
49300	*C-R*	**417273**
49300	*VIC*	**473211**!
49301	*C-R*	**417273**
49301	*VIC*	50468
49302	*VIC*	**470682**
49304	*VIC*	**473235**!
49305	*VIC*	**472185**!
49306	*VIC*	**473225**!
49307	*VIC*	**472164**!
4931	*C-R*	**330699**!*
49310	*VIC*	50402
49311	*VIC*	**411500**
49313	*VIC*	**472258**
49314	*VIC*	**470898**
49315	*VIC*	**470530**!
49316	*VIC*	**417316**!
49317	*VIC*	**410308**!
49317C1	*VIC*	**410308**
49318	*VIC*	**471827**
49319	*VIC*	**472560N**!
49320	*VIC*	**473458**!
49321	*VIC*	**471103**!
49324	*VIC*	5877
49324C1	*VIC*	5877
49328	*VIC*	9845
493287	*WHITE*	**415351**!
49330	*VIC*	**416654**!
49331	*VIC*	**470712**
49336	*VIC*	**471192**
49337	*VIC*	**470088**
49338	*VIC*	**471141**!
49340	*VIC*	**472924**!
49341	*VIC*	450165
49341	*VIC*	**471801**!
49342	*VIC*	**415984**!
49344	*VIC*	**472397**!
49346	*VIC*	5957S
49347	*VIC*	**471765**!
49348	*VIC*	5951
493482	*WHITE*	428RR
49349	*VIC*	**455151**
49350	*VIC*	**473245**!
49351	*VIC*	**473467**!
49352	*VIC*	**471271**!
49353	*VIC*	240319
49354	*VIC*	**457291**
49355	*VIC*	**473197**
49356	*VIC*	40504S=
49358	*VIC*	**471231**!
49359	*VIC*	**474278**!
49359	*VIC*	6859S
49360	*VIC*	**471466**!
49361	*VIC*	**417158**!
49362	*VIC*	**480210**!
49363	*VIC*	**473236**!
49364	*VIC*	5756
49368	*VIC*	240414
49369	*VIC*	6064
49372	*VIC*	**473229**!
49373	*VIC*	**474272**!
49374	*VIC*	450803
493759SSR	*SPG*	1977
49376	*VIC*	50468
49378	*VIC*	**415483**!
49379	*VIC*	**473179**
4938	*C-R*	**330699**
4938	*C-R*	342613!*
49380	*VERSA*	**416332**!
49380	*VIC*	5921
49382	*VIC*	50075=
49383	*VIC*	**473467**!
49385	*VIC*	**470606**!
49388	*VIC*	5924
49389	*VIC*	**416738**!
49389	*VIC*	450096
4939	*C-R*	**330699**!
4939	*SPG*	**472419**
49390	*VIC*	**455151**
49391	*VIC*	**415041**
49395	*VIC*	**472439**
49397	*VIC*	**411245**!
49398	*VIC*	**472810**!
49399	*VIC*	**470898**
4940	*C-R*	**330699**
49400	*VIC*	**473010**
49401	*VIC*	**471649**!
49402	*VIC*	**472012**
49403	*VIC*	**471255**!
49407	*VIC*	450129
49407	*VIC*	**472826**!
49408	*VIC*	**473234**
4940LA	*JN-MN*	**415995**!
4940LUP	*JN-MN*	**415995**!
49410	*VIC*	8139
494117SSR	*SPG*	42X56X7!
49412	*VIC*	6064
494123CA	*SPG*	494123
49413	*VIC*	**470625**!
49414	*VIC*	**472475**
49415	*VIC*	**471829**
49417	*VIC*	**470774**!
49418	*VIC*	**472354**!
4941LA	*JN-MN*	**415991**
4941LA	*JN-MN*	455146!
4941LUP	*JN-MN*	**415991**
4941LUP	*JN-MN*	455146!
4941VD	*SPG*	4941V
49420	*VIC*	**471619**!
49421	*VIC*	**410102**
49422	*VIC*	**473231**!
49424	*VIC*	473435
49426	*VIC*	**417485**
49426C1	*VIC*	**417485**
49427	*VIC*	46997S
49428	*VIC*	**411330**!
49429	*VIC*	**415234**
49430	*VIC*	**473213**!
49431	*VIC*	450467
49432	*VIC*	**472016**
49433	*VIC*	**450307**
49434	*VIC*	**471646**!
49435	*VIC*	**416273**!
49438	*VIC*	**473463**
49439	*VIC*	**473457**!
4943B	*JN-MN*	**473420**
49440	*VIC*	**472394**
49442	*VIC*	**472394**
49444	*VIC*	**470530**!
49445	*VIC*	**471689**!
49446	*VIC*	**415001**!
49447	*VIC*	40576S
49448	*VIC*	**471413**
49449	*VIC*	353141!
4945	*C-R*	**471442**!
49450	*VIC*	**415449**!
49451	*VIC*	**472636**!
49452	*VIC*	**416654**
49453	*VIC*	**415960**!
49454	*VIC*	**470954**
49457	*VIC*	**471787**!
49458	*VIC*	**471553**!
49459	*C-R*	417540
49459	*VIC*	**472164**!
4946	*C-R*	**471442**!
49460	*C-R*	417540
49460	*VIC*	**473227**!
49462	*VIC*	6090S
49463	*VIC*	**417621**!
49466	*VIC*	42763
49468	*VIC*	240007=
49469	*VIC*	**472015**!
49470	*VIC*	**412943**
49472	*VIC*	**417191**
49472	*VIC*	456585
49474	*VIC*	50026
49475	*VIC*	**474253**!
49475	*VIC*	**474253***
49476	*VIC*	**472572**!
49477	*VIC*	**473016**!
49478	*VIC*	**473243**

! Industrial Size/Type * Minor Width Difference

= The U.S. customer service number is 877-4-TIMKEN. The Canadian customer service numbers are 800-565-4927 (English) and 800-565-0438 (French-Canadian).

Mfr. No.	Name	Zero Duplication or Recommended Industrial
49479	*VIC*	450313
49479C1	*VIC*	450313
49480	*VIC*	**412871**!
49481	*VIC*	**450039**
49482	*VIC*	**471264**
49483	*VIC*	**472179***
49483	*VIC*	**472179**!
49483	*WABCO*	240009
49484	*VIC*	**411376**!
49485	*VIC*	**450040**
49486	*VIC*	41075S
49487	*VIC*	**471760**
49488	*VIC*	**471795**
49489	*VIC*	**415302**
49491	*VIC*	5865
49492	*VIC*	**417485**
49494	*VIC*	3210
49495	*VIC*	493291
49497	*VIC*	**471267**
49499	*VIC*	**417344**!
4950	*C-R*	**471442**
49501	*VIC*	**418028**
49501	*VIC*	455137!
49503	*VIC*	**473238**
49504	*VIC*	**418028**
49504	*VIC*	455137!
495045	*WHITE*	**470004**!
49505	*VIC*	**471766**!
49507	*VIC*	450335
49508	*VIC*	**412119**
49509	*VIC*	**474276**
4950D5	*DIA*	476574N
4951	*C-R*	240119
49510	*VIC*	**323138**!
49511	*VIC*	42352S
49512	*VIC*	**410737**!
49514	*VIC*	**471820**
49515	*VIC*	**470954**!
49517	*VIC*	**417181**!
49518	*VIC*	**473228**!
49519	*VIC*	**472810**!
49520	*VIC*	**413246**
49521	*VIC*	**470354**
49522	*VIC*	40085S!
49522	*VIC*	**470530***
49523	*VIC*	**471272**!
49526	*VIC*	**481644**
49527	*VIC*	340413
49529	*VIC*	340787
49530	*VIC*	40566S
49531	*DANA*	4525V
495311	*DANA*	4525V
49533	*VIC*	**471787**
49534	*VIC*	**473458**!
49535	*VIC*	8370S
49536	*VIC*	7107A=
49540	*VIC*	483054N
49540S	*TROS*	**471827**
49541	*HYST*	**471750**!
49542	*VIC*	**472354**!
49543	*VIC*	**470530**!
49545	*VIC*	6489
49546	*VIC*	**415995**!
49547	*VIC*	**472015**!
49548	*VIC*	43086S
49552	*VIC*	2081
49552SF	*VIC*	2081
49554	*VIC*	**472644**
49555	*VIC*	40468
49557	*VIC*	**474264**
4956	*C-R*	240119
49560	*VIC*	6846S=
49560S	*TROS*	6760S
49561	*VIC*	**417159**
49562	*VIC*	6966S
49563	*VIC*	6241S
49566	*VIC*	**415458**!
49567	*VIC*	410059
49567	*VIC*	**470380**!
49570	*VIC*	**470774**!
49572	*VIC*	**473179**
49573	*VIC*	**450776**!
49575	*VIC*	**471504**!
49577	*VIC*	**450776**!
49578	*VIC*	240356
49579	*VIC*	**472560N**
49581	*VIC*	6532S=
49582	*VIC*	**471835**!
49583	*VIC*	**414268**
49584	*VIC*	**412119**
49585	*VIC*	**473235**
49585C1	*VIC*	**473235**
49587	*VIC*	**472179**
49589	*VIC*	40097S
49590	*VIC*	40094S
49591	*VIC*	**471862**
49592	*VIC*	**473228**
49598	*VIC*	**417172**
49600	*VIC*	**410825**
49601	*VIC*	**471442**
49602	*VIC*	**471526**!
496028	*WHITE*	**417316**!
49603	*VIC*	40769S
49605	*VIC*	**471281**!
49606	*VIC*	**471785**!
49607	*VIC*	**417487**
49607	*VIC*	**417487**!
49608	*VIC*	**456105**
49609	*VIC*	**471567**!
49610	*VIC*	**472636**!
49611	*VIC*	**416282**
49612	*VIC*	**471344**
49614	*VIC*	6127
49616	*VIC*	**473238**!
49617	*VIC*	351487
49618	*VIC*	**417316**!
4961G	*GOODM*	**457874**
4962	*C-R*	**471442**!
49620	*VIC*	**416288**
49620S	*TROS*	**350936**
49624	*VIC*	**417316**!
49625TA	*TRSCM*	**417273**
49627	*VIC*	**481073**
49629	*VIC*	6489
4963	*C-R*	**471442**
49630	*VIC*	**415442**!
49630	*VIC*	55442
49631	*VIC*	80313
496311C91	*IH*	**416282**
496312C1	*IH*	3591
49632	*VIC*	200600
49633	*VIC*	**481181**!
4963475	*GMC*	**417205**!
49635	*VIC*	**472560N**
49636	*VIC*	240731
49637	*VIC*	240736
49638	*VIC*	**472439**
4964	*C-R*	**471442**
49640	*VIC*	6489
49644	*VIC*	6090S
49646	*VIC*	3173
49646	*VIC*	710928
49647	*VIC*	**410825**
49649	*VIC*	**473459**
4965	*C-R*	**471442**!
49650	*VIC*	5585
49651	*VIC*	6547
49653	*VIC*	**471571**
49654	*VIC*	**470954**!
49655	*VIC*	**471267**!
49656	*VIC*	40401
49657	*VIC*	**410987**!
49657	*VIC*	450686
49658	*VIC*	477609*=
49659	*VIC*	**473235**!
4965961	*GMC*	**417254**
4966	*C-R*	**471442**
49663	*VIC*	**471316**
4966340	*GMC*	**417273**
49666	*VIC*	**410737**!
496679C1	*IH*	**472636**!
49668	*VIC*	**472572**!
496680C1	*IH*	**472164**!
49669	*VIC*	**450143**
4967	*SPG*	354967
49671	*VIC*	340400
49672	*VIC*	200354
49674	*VIC*	**416664**!
49675	*VIC*	**471466**!
49676	*VIC*	6336S
49678	*VIC*	6922=
49679	*VIC*	6855N=
4968	*C-R*	**471442**
49680	*VIC*	6489
49686	*VIC*	**471192**
49687	*VIC*	340413
49688	*VIC*	240414
49689	*VIC*	340356
4968SS	*JN-MN*	340797
49690	*VIC*	**471224**!
49691	*VIC*	40183S!
49692	*VIC*	**471267**!
49693	*VIC*	240735
49695	*VIC*	**473464**!
49695	*VIC*	**473464**
49696	*VIC*	**471224**!
49697	*VIC*	6847S
49699	*VIC*	6370N
4969LA	*JN-MN*	**470625**!
49701	*VIC*	340797
49702	*VIC*	**410987**!
49703	*VIC*	**472560N**!
49705	*VIC*	6703S
49707	*VIC*	7600S
49709	*VIC*	**472179**
4970BX	*SPG*	710106
4970LA	*JN-MN*	**473228**
49711	*VIC*	8139
49713	*VIC*	**473179**
49715	*VIC*	6636S
49716	*VIC*	**471344**
49717	*VIC*	**471643**!
49718	*VIC*	**451078**!
49719	*VIC*	342517
4971BX	*SPG*	710103
49720	*VIC*	**473234**!
49721	*VIC*	450725N=
49722	*VIC*	**473461**!
49723	*VIC*	**472560N**
49725	*VIC*	7929S
49727	*VIC*	**417621**!
4972785	*GMC*	**415035**
4972785	*GMC*	**415035**!
49729	*VIC*	**472319**
49731	*VIC*	**470954**!
49733	*VIC*	**410308**!
49733	*VIC*	473468
49734	*VIC*	474131
49735	*VIC*	6703S
49736	*VIC*	6781
49737	*VIC*	**473010***
49737	*VIC*	**473010**!
49738	*VIC*	**472409**
49739	*VIC*	203034
49740	*TROS*	5414
49740	*VIC*	**472179**
49741	*VIC*	6818
49742	*VIC*	**353120**
497428BG	*SPG*	8976S
497428BX	*SPG*	8976S
49743	*VIC*	9613S
49744	*VIC*	**470898**!
49745	*VIC*	**415449**
49746	*VIC*	6840S
49747	*VIC*	9613S
49748	*VIC*	6985
49749	*VIC*	6785
4975	*C-R*	**471442**
4976	*C-R*	**471442**!
49761S	*TROS*	**471765**!
49767	*VIC*	7600S
4976LPD	*JN-MN*	**472234**
4977	*C-R*	**471442**!
49788	*VIC*	5797
4979	*C-R*	**471442**!
49792	*VIC*	**455249**!
49794	*VIC*	**417171**!
49796	*VIC*	**418028**
49796	*VIC*	455137!
49798	*VIC*	5871
497W324	*C-R*	**416339**
497W324	*C-R*	455031!
4980	*C-R*	**471442**!
49800	*VIC*	**417487**!
49805	*VIC*	**415371**
49806	*VIC*	**415025**
4980629	*GMC*	**416294**!
49807	*VIC*	**415027**
49807	*VIC*	**415027**!
49808	*VIC*	**415043**
49809	*VIC*	**415072**
49812	*VIC*	**415035**
49815	*VIC*	**415196**!
49815	*VIC*	**416380**
49816	*VIC*	417537
49817	*VIC*	**476470**
49818	*VIC*	**415034**!
4981VJ	*SPG*	4981V
49821	*VIC*	**455134**!
49822	*VIC*	45637S
498281	*WHITE*	**472705**!
49829	*VIC*	**416865**
4983	*C-R*	240119
49830	*VIC*	5751
49831	*VIC*	**415066**
49833	*VIC*	**415437**
49834	*VIC*	417516
49835	*VIC*	**417223**
49836	*VIC*	**415351**!
49837	*VIC*	370019A
4984	*C-R*	**471442**
49841	*VIC*	**455189**
49843	*VIC*	**415085**!
49843	*VIC*	456648
49844	*VIC*	**416125**!
49845	*VIC*	**415138**!
49846	*VIC*	370036A
49846	*VIC*	370349A

! Industrial Size/Type * Minor Width Difference

= The U.S. customer service number is 877-4-TIMKEN. The Canadian customer service numbers are 800-565-4927 (English) and 800-565-0438 (French-Canadian).

Mfr. No.	Name	Zero Duplication or Recommended Industrial
49848	VIC	415023
4985	C-R	471442!
49851	VIC	6644
49852	VIC	417355!
49853	VIC	415021
49856	VIC	415991
49856	VIC	455146!
49857	VIC	6077
49860	VIC	415437
49860	VIC	415437!
49865	VIC	416229
49866	VIC	455022
49867	VIC	415284
49868	VIC	415041
49869	VIC	416332!
49870	VIC	416345!
49870	VIC	455033
49871	VIC	415187
49872	VIC	416888!
49873	VIC	416892!
49874	VIC	417538
49876	VIC	417546!
49877	VIC	416107!
49877	VIC	455073
49878	VIC	416666
49879	VIC	416476!
4987VJ0	SPG	9316
4988	C-R	471442!
49881	VIC	415124
49882	VIC	55028
49883	VIC	416229
49884	VIC	417356!
49884	VIC	455188
49885	VIC	415058
49888	VIC	417507
49888	VIC	417507!
49889926	ALLCH	471504
4988LA	JN-MN	471652*
4989	C-R	240119
49891	VIC	416070
49893	VIC	7208S
49894	VIC	415394
49896	VIC	415137!
49896	VIC	418028
49899	VIC	55646=
498B4	C-R	415035*
498BM4	C-R	415035*
498BM4-T8	C-R	415035
498HMS4-T8	C-R	415035!
498HMS4-T8	C-R	415035
4990	C-R	471442!
49901	VIC	416892
49902	VIC	417518
49904	VIC	6358
49905	VIC	6465
49909	VIC	415697!
49909	VIC	455547
4990B	JN-MN	55532=
49910	VIC	412473!
49911	VIC	416339
49911	VIC	455031!
49912	VIC	6270
49913	VIC	455402=
49915	VIC	416130!
49916D	IH	417351!
49917	VIC	415058
4992	C-R	471442!
49920	C-R	3492V
49920	VIC	456618
49921	C-R	5665
49922	VIC	55367=
49926	VIC	6603*=
49927	C-R	39801
49927	VIC	6245S=
49928	C-R	415725!
49929	C-R	415725!
4993	C-R	455019!*
49931	DANA	100552
499310	C-R	455024*
499310M1	C-R	455024*
499312	C-R	415025*
499312M1	C-R	417191
499312M1	C-R	455165!
499314	C-R	455026*
499314M1	C-R	455026*
499316	C-R	415027!
499316	C-R	415027
499316M1	C-R	415027
499318	C-R	55028*
499318M1	C-R	55028*
49932	C-R	455020
49932	VIC	5401$
499320	C-R	416125!*
499322	C-R	55030*
499322M1	C-R	55030*
499324	C-R	416339
499324	C-R	455031!
499324M1	C-R	416339
499324M1	C-R	455031!
499326	C-R	455032!*
499328	C-R	416345!
499328	C-R	455033
499328M1	C-R	416345!
499328M1	C-R	455033
49933	VIC	5403$
499330	C-R	415034!
499330M1	C-R	415034!
49934	C-R	415021
49934	VIC	5405$
49934M1	C-R	415021*
49935	C-R	39801
49936	C-R	455022*
49936M1	C-R	455022*
49937	VIC	415351!
49938	C-R	415725!
49938K	IH	471747!
49938M1	C-R	415023
49939	C-R	415725!
49939	VIC	417541
4993M1	C-R	455019!*
4994	HU-WR	415035
49940	C-R	415725!
49941	C-R	415725!
49941	VIC	417506
49943	C-R	415725!
49943	VIC	416125!
49944887	ALLCH	416130!
49947	VIC	6638S
49948	VIC	6635S
49949	VIC	417353!
4994M1	C-R	415035
4995	C-R	471442
49952	VIC	6754S=
49953	VIC	370002A
49957	C-R	417584
49958	C-R	417584
49958	VIC	416297
49958A	OSHKO	417247!
49959	VIC	471760
49960	C-R	417584
49961	VIC	6592S=
49962	VIC	471267!
49963	VIC	370002A
49965	C-R	416865!
49966	C-R	416865!
49966	VIC	471763
49967	VIC	327303!
49968	VIC	415064
49969	VIC	5313$
4996B	JN-MN	471354!*
49971	VIC	415284
49971906	ALLCH	471554!
4997LA	JN-MN	415138!*
49980	C-R	416865!
49981	C-R	416865!
49981	VIC	410987=
49984	C-R	416865!
49985	C-R	416865!
49990	C-R	416865
49991	C-R	416865=
49993	VIC	345035
49994	HYST	472951
49994	HYST	474252
49995	C-R	416865!
49995	VIC	357302
49995	VIC	415991
49996	VIC	415991
49996	VIC	455146!
49997	C-R	416865!
49998	C-R	416865!*
49998	VIC	417355!
49998	VIC	485497
49999	VIC	6643S
499B4	C-R	415035*
499BM4	C-R	415035*
499W3	C-R	455019!*
499W310	C-R	455024*
499W312	C-R	415025*
499W314	C-R	455026*
499W316	C-R	415027
499W316	C-R	415027!
499W316-M1	C-R	415027!
499W316-M1	C-R	415027
499W320	C-R	416125!*
499W324	C-R	416339
499W324	C-R	455031!
499W34	C-R	415021
499W36	C-R	455022*
499W38	C-R	415023
499W38-M1	C-R	415023
49KH257	MACK	713750
4A-0412	WHITE	417563
4A143	FAIRB	471571
4A5X328	FWD	5M466
4AK-084	WHITE	416654
4AR72510121	IH	473466
4B-1241	WHITE	471766!
4B2225	CATER	471137
4B2396	CATER	473460
4B2396	WESTR	473460
4B3421	CATER	472572!
4B3675	CATER	472179
4B4371	CATER	415027!
4B4371	CATER	415027
4B4529	CATER	417621!
4B4865	CATER	473016!
4B4967	CATER	415995!
4B5171	CATER	7208S
4B5432	CATER	450536
4B5432	CATER	471535!
4B8024	CATER	417344!
4B8024	WESTR	417344!
4B8396	CATER	415036
4B9371	CATER	415027!
4B9371	CATER	415027
4B9372	CATER	416339
4B9372	CATER	455031!
4BL-0412	WHITE	370036A
4BL-0412	WHITE	370349A
4BL084	WHITE	470059
4BL084	WHITE	470380!
4BM-0412	WHITE	5751
4BM-0470	WHITE	473215!
4BM-084	WHITE	473215!
4D1608	CATER	450593!
4D2657	CATER	471267!
4D3034	CATER	455117
4D3587	CATER	416339
4D3587	CATER	455031!
4D3881	CATER	456111=
4D6592	CATER	472164!
4D6996	CATER	415227!
4D6996	CATER	417756
4D8576	CATER	471271!
4DG-0383	WHITE	473367
4DG-0383	WHITE	473367!
4DG-0395	WHITE	473449
4DK-0644	WHITE	470088
4DKB-0644	WHITE	473238
4E12560	HU-WR	471341!
4E12564	HU-WR	474278!
4E13392	HU-WR	415294!
4E13457	HU-WR	416345!
4E13457	HU-WR	455033
4E13759	HU-WR	417343!
4E13760	HU-WR	415036
4E13872	HU-WR	415991
4E13872	HU-WR	455146!
4E14664	HU-WR	471341!
4E14766	HU-WR	474278!
4E14999	HU-WR	450040
4E15000	HU-WR	471692!
4E15001	HU-WR	473238
4E15002	HU-WR	413247!
4E15003	HU-WR	415449!
4E15010	HU-WR	415379
4E15010	HU-WR	415379!
4EQB-0644	WHITE	415458!
4F1414	CATER	55532=
4F2090	CATER	416364!
4F2103	CATER	415938
4F2285	CATER	471532
4F4584	CATER	470954!
4F4780	CATER	415295
4F4896	CATER	473232
4F5122	CATER	416476!
4F549	CATER	411394!
4F6888	CATER	450412
4F7389	CATER	428RR
4F7500	CATER	417525
4F8597	CATER	55532=
4F897	CATER	55532=
4F9172	CATER	6309=
4FD-0644	WHITE	415023
4FE-0644A	WHITE	416288!
4FE-0936	WHITE	415458!
4FKA-084	WHITE	415001!
4FKW-084	WHITE	415960
4FKW-O8	WHITE	415960
4G-0383	WHITE	410102
4G-0395	WHITE	470334!
4G-0936	WHITE	50631
4GCT-0396	WHITE	411500
4GCT-0936	WHITE	411500
4GE-0395A	WHITE	415137!
4GE-0395A	WHITE	418028
4GE-0618	WHITE	417159
4GE-0618A	WHITE	417159

! Industrial Size/Type * Minor Width Difference $ F-M Number Is Part Of A Kit
= The U.S. customer service number is 877-4-TIMKEN. The Canadian customer service numbers are 800-565-4927 (English) and 800-565-0438 (French-Canadian).

Mfr. No.	Name	Zero Duplication or Recommended Industrial
4GE-0936	*WHITE*	**412119**!
4GEO395	*WHITE*	415137!
4GEO395	*WHITE*	**418028**
4GKW-084	*WHITE*	475348N
4GTCO396	*WHITE*	**411500**
4H1722	*CATER*	**471281**!
4H1723	*CATER*	**471442**!
4H572	*CATER*	**472397**!
4H8100	*CATER*	**415458**=
4H8101	*CATER*	**415995**!
4H9484	*CATER*	**472572**!
4H9836	*CATER*	**473232**
4H9836	*WESTR*	**473232**
4J2683	*CATER*	**470565**!
4J3043	*CATER*	**471466**!
4J3923	*CATER*	**471224**!
4J4190	*CATER*	8710=
4J6716	*CATER*	**471539**!
4J7441	*CATER*	**471413**!
4J7557	*CATER*	**471554**!
4J793	*CATER*	**471570**!
4J8979	*CATER*	**470625**
4J8980	*CATER*	**471504**
4J8981	*CATER*	710015
4J8982	*CATER*	710014
4K1372	*CATER*	**471692**!
4K4114	*CATER*	**471267**!
4K4320	*CATER*	472020
4K4376	*CATER*	**476470**
4K4390	*CATER*	**411500**=
4K4390	*CATER*	**411500***
4K4845	*CATER*	**473214**!
4K4845	*JOHND*	**473214**!
4K5076	*CATER*	**470954**!
4K5438	*CATER*	**473244**!
4K5654	*CATER*	442110=
4K7461	*CATER*	**416888**!
4K7462	*CATER*	**416345**!
4K7462	*CATER*	455033
4K7463	*CATER*	**417350**!
4K9610	*CATER*	**415995**!
4L4360	*CATER*	**455121**
4L6942	*CATER*	**471224**!
4L7019	*CATER*	50199S!
4L7019	*CATER*	6863S!
4L7248	*CATER*	**415984**!
4L7336	*CATER*	**415437**
4L9021	*CATER*	351518*=
4L9822	*CATER*	**476470**=
4LD482	*WITTE*	**411245**!
4M2343	*CATER*	**470774**!
4M2444	*CATER*	415213N
4M5229	*CATER*	**470565**=
4M9148	*CATER*	**471766**!
4M9149	*CATER*	**473229**
4N0636	*CATER*	**471224**!
4N0848	*CATER*	J1842
4N1584	*CATER*	**471649**!
4N636	*CATER*	**471224**!
4N848	*CATER*	J1842
4NFG-0395	*WHITE*	**415001**!
4NFG-0395A	*WHITE*	**415001**!
4NK-0730	*WHITE*	**470530**!
4NK-084	*WHITE*	**415960**!
4P1142	*ADAMS*	**416921**!
4P1355	*ADAMS*	**471137**
4P1355	*WABCO*	**471137**
4P1569	*ADAMS*	**450593**!
4P1569	*LETN*	**450593**!
4P2524	*ADAMS*	**471744**!
4P2524	*LETN*	**471744**!
4P2524	*WABCO*	**471744**!
4P2723	*CATER*	39887
4P2734	*CATER*	39888
4R15788	*C-R*	5778
4R1978	*GMC*	**415683**
4R26	*CATER*	**416273**!
4R32	*CATER*	**415379**
4R32	*CATER*	**415379**!
4R35	*CATER*	**415389**=
4R526	*CATER*	**471554**!
4R8831	*CATER*	39882
4R9	*CATER*	416257H=
4S6752	*CATER*	2791
4S7756	*CATER*	**471442**!
4S9006	*CATER*	**473238**
4SC28CR	*DEMPC*	340927
4SK-0730	*WHITE*	**472636**!
4SK-08	*WHITE*	**416654**
4SK-084	*WHITE*	**416654**
4TCP-084	*WHITE*	**416282**
4U-01430	*WHITE*	**416654**
4UG-0730	*WHITE*	**471141**!
4UG-084	*WHITE*	**417487**!
4UG-084	*WHITE*	**417487**
4UK-084	*WHITE*	**415960**!
4W0452	*CATER*	39885
4W2606	*CATER*	39900
4W2607	*CATER*	39899
4W8133	*CATER*	39890
4W8134	*CATER*	39889
4X5763	*CATER*	**455191**
4ZDK-0395	*WHITE*	**472924**!
5-000-684-699	*RENAU*	712113
5-000-684-700	*RENAU*	712112
5-003-087-026	*RENAU*	712114
5-003-087-027	*RENAU*	712119
5-003-087-028	*RENAU*	712118
5-003-087-031	*RENAU*	712116
5-003-087-032	*RENAU*	712115
5-3002	*IPS*	58X72X8
5-3003	*IPS*	1195
5-3014	*IPS*	1949
5-3015	*IPS*	1196
5-3016	*IPS*	494122
5-3017	*IPS*	474134
5-3023	*IPS*	1183
5-3025	*IPS*	1188
5-3028	*IPS*	2002
5-3029	*IPS*	1884
5-3030	*IPS*	1977
5-3031	*IPS*	1884
5-3036	*IPS*	1999
5-3038	*IPS*	**472213**
5-3039	*IPS*	223535
5-3041	*IPS*	1992
5-3045	*IPS*	1192
5-3047	*IPS*	1952
5-3048	*IPS*	1943
5-3092	*IPS*	224015
5-3093	*IPS*	1950
5-3099	*IPS*	**480630**!
5-3100	*IPS*	1195
5-3103	*IPS*	1165
5-3104	*IPS*	1195
5-3108	*IPS*	1967
5-3109	*IPS*	1209
5-3111	*IPS*	1984
5-3113	*IPS*	482126
5-3116	*IPS*	444116
5-3127	*IPS*	225540
5-3142	*IPS*	5696
5-4004	*IPS*	1962
5-4009	*IPS*	**472164**!
5-4014	*IPS*	473812
5-4015	*IPS*	**473179**!
5-4030	*IPS*	334111
5-4032	*IPS*	1167
5-4033	*IPS*	1128
5-4036	*IPS*	223014
5-4041	*IPS*	473823
5-4044	*IPS*	**3395**!
5-4047	*IPS*	494117
5-4056	*IPS*	494117
5-4064	*IPS*	**473234**!
5-4087	*IPS*	1906
5-4093	*IPS*	224015
5-4099	*IPS*	1960
5-4100	*IPS*	1956
5-4101	*IPS*	1959
5-4122	*IPS*	1962
5-4128	*IPS*	**473238**!
5-4129	*IPS*	**473238**!
5-X265	*ROCKW*	5M497
5-X328	*KEN*	5M466
5-X328	*ROCKW*	5M466
50-101-107A	*TRMBL*	370036A
50-101-107B	*PUL*	370065A
50-101-107C	*PUL*	370338A
50-101-107D	*PUL*	376590A
50-101-107E	*PUL*	370003A
50-101-107F	*PUL*	370007A
50-101-107G	*PUL*	**418028**
50-101-107H	*PUL*	370020A
50-101-107J	*PUL*	**416892**
50-101-107K	*PUL*	370015A
50-101-107L	*PUL*	370107A
50-101-107M	*PUL*	370349A
50-101-107N	*PUL*	370001A
50-101-107P	*PUL*	370006A
50-101-107R	*PUL*	370012A
50-101-107T	*PUL*	370019A
50-101-107U	*TRMBL*	370021A
50-101-107V	*PUL*	370023A
50-101-107W	*TRMBL*	370030A
50-101-16	*TRMBL*	370036A
50-101-16	*TRMBL*	370349A
50-101-16D	*TRMBL*	370036A
50-101-16D	*TRMBL*	370349A
50-101-23	*TRMBL*	370036A
50-101-23	*TRMBL*	370349A
50-101-23D	*TRMBL*	370036A
50-101-23D	*TRMBL*	370349A
50-101-3	*TRMBL*	370036A
50-101-3	*TRMBL*	370349A
50-101-54	*TRMBL*	370065A
50-101-54	*TRMBL*	376590A
50-101-80A	*TRMBL*	**416158**
50-101-80B	*TRMBL*	**416158**
50-101-80C	*TRMBL*	**416158**
50-101-80D	*TRMBL*	**416158**
50-101-80F	*TRMBL*	**416158**
50-101-94	*TRMBL*	**416158**
50-101-95	*PUL*	370037A
50-101-96	*TRMBL*	**416158**
50-101-C	*TRMBL*	**416158**
50-101B	*TRMBL*	**416158**
50-300035-00	*GOETZ*	7X16X7
50-300076-00	*GOETZ*	102X130X13
50-300174-10	*GOETZ*	48X65X10
50-300249-00	*GOETZ*	12X32X7
50-300266-00	*GOETZ*	13X22X6
50-300288-00	*GOETZ*	14X24X7
50-300324-00	*GOETZ*	15X24X7
50-300354-00	*GOETZ*	15X30X7
50-300445-00	*GOETZ*	16X35X7
50-300469-00	*GOETZ*	17X28X7
50-300513-00	*GOETZ*	17X40X7
50-300535-00	*GOETZ*	18X30X7
50-300560-00	*GOETZ*	19X32X7
50-300623-00	*GOETZ*	20X32X7
50-300633-00	*GOETZ*	20X35X7
50-300655-10	*GOETZ*	20X37X7
50-300693-10	*GOETZ*	40X55X8
50-300698-00	*GOETZ*	20X47X7
50-300749-00	*GOETZ*	22X35X7
50-300804-10	*GOETZ*	12X25X7
50-300933-00	*GOETZ*	25X42X6
50-300995-00	*GOETZ*	25X52X10
50-301064-00	*GOETZ*	8X14X4*
50-301078-00	*GOETZ*	28X40X7
50-301120-00	*GOETZ*	28X52X7
50-301196-00	*GOETZ*	30X47X7
50-301320-00	*GOETZ*	32X45X7
50-301349-00	*GOETZ*	32X52X7
50-301398-00	*GOETZ*	28X47X7
50-301534-00	*GOETZ*	35X56X10
50-301538-00	*GOETZ*	35X58X10*
50-301640-00	*GOETZ*	38X50X7
50-301647-00	*GOETZ*	38X52X7
50-301696-00	*GOETZ*	30X45X8
50-301783-00	*GOETZ*	40X56X10
50-301814-00	*GOETZ*	40X62X12
50-301835-10	*GOETZ*	40X65X10
50-301860-00	*GOETZ*	40X80X10*
50-301891-00	*GOETZ*	42X55X7
50-301952-00	*GOETZ*	42X72X10
50-302034-00	*GOETZ*	20X40X10
50-302084-00	*GOETZ*	45X65X8
50-302158-00	*GOETZ*	46X65X7*
50-302183-00	*GOETZ*	145X175X15
50-302218-00	*GOETZ*	48X68X10
50-302248-00	*GOETZ*	28X42X8
50-302294-00	*GOETZ*	50X72X8
50-302323-00	*GOETZ*	50X80X8
50-302436-00	*GOETZ*	55X72X8
50-302481-00	*GOETZ*	55X85X10
50-302483-00	*GOETZ*	55X90X13
50-302581-10	*GOETZ*	80X105X13
50-302617-00	*GOETZ*	60X85X8
50-302643-00	*GOETZ*	60X90X10
50-302666-10	*GOETZ*	62X85X8
50-302706-10	*GOETZ*	64X80X8
50-302714-00	*GOETZ*	65X80X8
50-302727-00	*GOETZ*	60X75X8
50-302838-00	*GOETZ*	6X16X7
50-302863-00	*GOETZ*	70X110X10
50-302869-00	*GOETZ*	72X90X10
50-302907-00	*GOETZ*	75X90X8
50-302915-00	*GOETZ*	75X95X10
50-302928-00	*GOETZ*	55X70X8
50-302960-00	*GOETZ*	75X105X13
50-303038-00	*GOETZ*	80X110X10
50-303065-00	*GOETZ*	82X105X13
50-303096-00	*GOETZ*	55X75X10
50-303114-00	*GOETZ*	85X115X13
50-303148-00	*GOETZ*	90X110X12
50-303158-00	*GOETZ*	85X105X13
50-303204-00	*GOETZ*	95X115X12
50-303208-00	*GOETZ*	95X120X12
50-303253-00	*GOETZ*	100X120X10
50-303290-00	*GOETZ*	100X130X12
50-303370-00	*GOETZ*	10X19X7
50-303449-00	*GOETZ*	120X150X12
50-303464-00	*GOETZ*	120X160X12
50-303477-00	*GOETZ*	125X150X12
50-303483-00	*GOETZ*	70X90X10
50-303495-00	*GOETZ*	45X85X10

! Industrial Size/Type * Minor Width Difference

= The U.S. customer service number is 877-4-TIMKEN. The Canadian customer service numbers are 800-565-4927 (English) and 800-565-0438 (French-Canadian).

Mfr. No.	Name	Zero Duplication or Recommended Industrial
50-303571-00	GOETZ	140X160X12
50-303572-00	GOETZ	140X160X13
50-303596-10	GOETZ	145X170X12
50-303642-00	GOETZ	17X35X7
50-303686-00	GOETZ	170X200X15
50-303719-00	GOETZ	190X220X16
50-303782-00	GOETZ	240X270X15
50-303829-00	GOETZ	45X60X7
50-303903-00	GOETZ	150X180X12
50-303991-00	GOETZ	30X42X7
50-304033-00	GOETZ	8X16X7
50-304101-00	GOETZ	27X37X7
50-304115-00	GOETZ	95X110X10
50-304126-00	GOETZ	38X55X7 *
50-304140-00	GOETZ	160X190X15
50-304240-00	GOETZ	40X58X8
50-304251-10	GOETZ	85X105X10
50-304279-00	GOETZ	55X80X8
50-304334-00	GOETZ	65X90X13
50-304370-00	GOETZ	58X75X11
50-304381-00	GOETZ	100X125X12
50-304413-00	GOETZ	58X80X8
50-304478-00	GOETZ	40X55X6
50-304488-00	GOETZ	25X52X7
50-304514-00	GOETZ	12X28X7
50-304524-00	GOETZ	110X130X12
50-304592-00	GOETZ	50X65X8
50-304604-00	GOETZ	40X90X8 *
50-304714-00	GOETZ	90X120X12
50-304747-00	GOETZ	15X35X7
50-304820-00	GOETZ	12X30X7
50-304838-00	GOETZ	150X180X15
50-304879-00	GOETZ	75X100X10
50-304883-00	GOETZ	40X60X10
50-304890-00	GOETZ	16X30X7
50-305087-00	GOETZ	68X90X10
50-305099-00	GOETZ	60X80X8
50-305247-00	GOETZ	8X14X4
50-305276-00	GOETZ	52X68X8
50-305461-00	GOETZ	40X62X7
50-305478-00	GOETZ	148X170X15
50-305521-00	GOETZ	50X90X10
50-305535-00	GOETZ	85X110X12
50-305538-00	GOETZ	32X47X7
50-305650-00	GOETZ	12X22X7
50-305827-00	GOETZ	30X50X8
50-305940-50	GOETZ	28X38X7
50-305948-00	GOETZ	40X58X10
50-306056-00	GOETZ	45X60X10
50-306111-00	GOETZ	65X85X8
50-306126-00	GOETZ	8X18X5
50-306195-00	GOETZ	25X42X8
50-306228-00	GOETZ	65X85X10
50-306264-00	GOETZ	35X52X7
50-306315-00	GOETZ	42X56X7
50-306364-00	GOETZ	40X52X7
50-306371-70	GOETZ	25X62X10
50-306386-00	GOETZ	110X150X12 !
50-306386-00	GOETZ	110X150X15
50-306429-00	GOETZ	42X60X7
50-306498-00	GOETZ	10X26X7
50-306503-00	GOETZ	6X16X7
50-306510-00	GOETZ	20X30X7
50-306512-00	GOETZ	25X47X7
50-306515-00	GOETZ	35X62X7
50-306521-50	GOETZ	30X52X7
50-306542-50	GOETZ	42X58X7
50-306554-00	GOETZ	45X72X12
50-306609-50	GOETZ	26X37X7
50-306756-00	GOETZ	22X45X7
50-306762-00	GOETZ	16X24X5
50-306821-70	GOETZ	42X55X8

Mfr. No.	Name	Zero Duplication or Recommended Industrial
50-307047-70	GOETZ	35X47X7
50-307065-70	GOETZ	115X140X12
50-319004-00	GOETZ	35X72X10
50-319033-00	GOETZ	25X40X7
50-319078-00	GOETZ	35X50X7 *
50-319078-00	GOETZ	35X50X8
50-319142-00	GOETZ	48X62X8
50-319155-00	GOETZ	35X48X8
50-319164-00	GOETZ	55X68X8
50-319166-00	GOETZ	35X45X7
50-319168-00	GOETZ	30X48X8
50-319197-00	GOETZ	100X120X12
50-319217-00	GOETZ	48X72X7
50-319223-00	GOETZ	45X62X8
50-319227-00	GOETZ	130X160X15
50-319229-00	GOETZ	120X140X13
50-319231-00	GOETZ	105X130X12
50-319234-00	GOETZ	42X62X8
50-319248-00	GOETZ	40X62X8
50-319261-00	GOETZ	50X70X9
50-319275-00	GOETZ	30X40X7
50-319280-00	GOETZ	130X160X12
50-319281-00	GOETZ	56X80X8
50-319289-00	GOETZ	32X50X8
50-319292-00	GOETZ	28X40X8
50-319296-00	GOETZ	80X100X10
50-319297-00	GOETZ	120X145X12
50-319303-00	GOETZ	35X54X8
50-319304-00	GOETZ	110X140X13
50-319313-00	GOETZ	8X16X7 *
50-319321-00	GOETZ	18X32X7
50-319327-00	GOETZ	45X68X7 *
50-319328-00	GOETZ	25X35X7
50-S350	LETN	**413247** !
50-S441	LETN	**471341** !
50-S476	LETN	**471344**
500	UNIVE	**416865** !
50000	C-R	**416865** !
50000	CHRYS	**471466** !
500007	C-R	**473234** !
500007	CHRYS	**471466** !
500007	GMC	**471466** !
50001	C-R	**416865** !
500010	C-R	240462
500010901	EATON	**411245** !
500010901	Y-T	**411245** !
500010902	EATON	**472439**
500010902	Y-T	**472439**
500011	C-R	**457291**
500012	CONTI	**471554** !
500017	C-R	**471413**
50002	C-R	**416865** !
500022	C-R	40401
500022	GMC	**471689** !
500024	C-R	**471224** !
500025	C-R	**476838** !
500026	BL-KN	**472560N** !
500026901	WHITE	J1127
500029	C-R	**471554** !
50003	C-R	**416865** !
50003	SPG	**474277**
500033	C-R	**474278** !
500034	C-R	**417344** !
500039	NAPCO	450073
500040	C-R	50468
500042	C-R	50191
500046	GMC	**472258**
500046	OLIVE	**472258**
500046	WHITE	**472258**
500047	C-R	**470774** !
500048	C-R	**473215** !
500048	CHRYS	**471192**

Mfr. No.	Name	Zero Duplication or Recommended Industrial
500048	CONTI	**471192**
500050101	WHITE	J1121
500055	C-R	**474278** !
500056	C-R	205004
500057	C-R	**471766** !
500061	B-L-H	**473228**
500063	ALLCH	**410190**
500064	C-R	470059
500064	C-R	**470380**
500067	C-R	**415984** !
50006901	WHITE	J1127
50007	SPG	**471281** !
500073	C-R	410059
500073	C-R	**470380** !
500075	C-R	**472179**
500077	C-R	**455191**
500079	C-R	**471785**
50007S	SPG	**471281** !
50008	SPG	**471532**
500081	C-R	**473367** !
500081	C-R	**473367**
500086	C-R	**473517** !
5000876C	WHITE	**473214** !
500089401	WHITE	**473464**
5000894B	WHITE	**473464**
50008S	SPG	**471532**
50009	SPG	**471466** !
500090	NAPCO	**471224** !
500091	C-R	351487
500093	C-R	**415196** !
5000938A	WHITE	J1128
500094	C-R	**416130** !
500094	WHITE	**471141** !
500095	C-R	240319
500097	C-R	**481537**
5000978A	WHITE	J1138
500098	C-R	**471137**
50009S	SPG	**471466** !
5001	C-R	1041
5001011	WHITE	415053H =
500117701	WHITE	**471570** !
5001177B	WHITE	**471570** !
500118001	WHITE	**472164** !
5001180B	WHITE	**472164** !
500118100	EATON	8636 =
500122	GMC	5877
500131	C-R	**471267** !
500134	C-R	**472560N** !
500134	SELAS	5118
500135	C-R	**471498**
500135	MACK	**472016**
500136	C-R	**471649** !
5001363A	WHITE	J1103
5001377A	WHITE	J1107
50014	SPG	**471472** !
500142	C-R	**470712**
500143	CHRYS	**472636** !
500144	SELAS	5117
500145	C-R	**470774** !
500148	C-R	**471192**
50014S	SPG	**471472** !
50015	GEM	**472164** !
500151	CONTI	**412119** !
500152	C-R	**471504** !
500159	C-R	40369S
50015A	GEM	**472492** !
500163	C-R	**473234**
500164	C-R	**472492** !
500168	C-R	**470898**
500169	C-R	**471341** !
500169E	OLIVE	204002
500169E	WHITE	204002

Mfr. No.	Name	Zero Duplication or Recommended Industrial
50017	HYST	**473405**
500170	SELAS	5116
500175	C-R	**470605** !
500176	C-R	**410708**
500176	OLIVE	**416654** !
500178E	WHITE	204027
500179	C-R	**410825**
5001824C	HERCU	471781N =
500184	C-R	**415995** !
500185	C-R	**416654**
500188905	EATON	**471466** !
500189	C-R	**417355** !
50019	SPG	**471549** !
500190	C-R	**417967** !
500191	C-R	455024
500194	C-R	**415138** !
500198	C-R	204008
50019S	SPG	**471549** !
500208	BOWEN	**417546** !
500209	C-R	**472705** !
50021	SPG	**471551** !
500210	C-R	**471532**
500212	C-R	**471567** !
500213	NAPCO	**416404** !
500215	C-R	**471647**
500216	C-R	**450039**
500218	C-R	**471224**
50021S	SPG	**471551** !
500221	C-R	203005 !
500222	C-R	**471652**
500222	C-R	482208 !
500223	C-R	**471652**
500223	C-R	482208 !
500223	FT-WA	**471103** !
500226	C-R	**471765**
500226	GMC	**470954** !
500227	C-R	**471413**
500228	C-R	**471750**
500229	C-R	**471750**
50023	SPG	**471255** !
500230	C-R	**471766** !
500232	C-R	**473214**
500233	C-R	204013
500234	C-R	**470380** !
500237	C-R	**472299**
500238	CHRYS	**417357**
500238	CHRYS	455192 !
500239	C-R	**472185** !
50023S	SPG	**471255** !
500241	C-R	6930
500241	CHRYS	**471567** !
500241	CONTI	**471567** !
50025	C-R	**416865** !
50025	SPG	**471553** !
500250	C-R	46997S
500251	C-R	**415960**
500253	C-R	**418029** !
500254	ALLCH	**473464** !
500254	ALLCH	**473464**
500254	C-R	**417511**
500255	C-R	**416888** !
500256	C-R	**415988**
500257	GMC	5070
500259	C-R	40769S
50025S	SPG	**471553** !
500262	CHRYS	**417196** !
500263	GMC	**415379** !
500263	GMC	**415379**
500263	MASSE	**415379** !
500263	MASSE	**415379**
500265	C-R	**415960**
500265	C-R	**415960** !

! Industrial Size/Type * Minor Width Difference

= The U.S. customer service number is 877-4-TIMKEN. The Canadian customer service numbers are 800-565-4927 (English) and 800-565-0438 (French-Canadian).

Mfr. No.	Name	Zero Duplication or Recommended Industrial
50027	*SPG*	**471554**!
500272	*C-R*	472951
500272	*C-R*	**474252**
500274	*C-R*	**474279N**
500274	*GMC*	**415045**!
500277	*C-R*	6270
500278	*C-R*	5751
50027S	*SPG*	**471554**!
500280	*C-R*	50883=
500282	*CHRYS*	**416865**!
500282	*GMC*	**416865**!
500284	*C-R*	**471466**
500286	*C-R*	340724!
500286	*CHRYS*	**471765**!
500286	*CONTI*	**471765**!
500287	*CEMAC*	**470530**!
500288	*C-R*	**471442**
50029	*SPG*	**481568**!
500291	*C-R*	**481073**
500292	*C-R*	**471553**!
500297	*C-R*	**471567**!
500298	*C-R*	**471498**
500298	*NAPCO*	**415437**!
500298	*NAPCO*	**415437**
5003	*C-R*	**455019**!
5003	*FAIRB*	**455019**!
50030	*SPG*	**474253**
50030007.5	*TROS*	**455019**!
50030807.5	*TROS*	**415021**
50030S	*SPG*	**474253**
50031	*SPG*	473413
500310	*C-R*	**471689**!
500310	*GOODM*	455024
500310K	*GOODM*	455024
500310M1	*C-R*	455024
500312	*C-R*	**415025**
500312	*GR-DV*	**415025**
50031207.5	*TROS*	370012A
500312M1	*C-R*	**415025**
500314	*C-R*	**455026**
500315	*C-R*	**471760**
500316	*B-L-H*	**415027**!
500316	*B-L-H*	**415027**
500316	*C-R*	**415027**!
500316	*C-R*	**415027**
500316	*CABOT*	**415027**!
500316	*CABOT*	**415027**
500316	*GOODM*	**415027**
500316	*GOODM*	**415027**!
50031607.5	*TROS*	**415034**!
500316M1	*C-R*	**415027**!
500316M1	*C-R*	**415027**
500316TB	*C-R*	**415027**
500316TB	*C-R*	**415027**!
500318	*C-R*	55028
500318M1	*C-R*	55028
500319	*C-R*	**480210**!
50032	*C-R*	455020
50032	*NOVI*	**330385**!
50032	*SPG*	**471570**!
500320	*C-R*	**416125**!
500320	*HU-WR*	**416125**!
500320	*MINMA*	**416125**!
50032007.5	*TROS*	455024
500320M1	*C-R*	**416125**!
500321	*C-R*	**471762**!
500321	*NOVI*	**330385**
500322	*C-R*	**473420**
500323	*C-R*	**471652**
500323	*C-R*	482208!
500324	*C-R*	**416339**
500324	*C-R*	455031!
500324	*GOODM*	**416339**
500324	*GOODM*	455031!
500324	*GR-DV*	**416339**
500324	*GR-DV*	455031!
50032407.5	*TROS*	**415025**
500325	*C-R*	**471652**
500325	*C-R*	482208!
500325	*NOVI*	240385
500326	*C-R*	**455032**!
500326	*NOVI*	**472810**!
500327	*C-R*	**471692**!
500327	*NOVI*	**350936**
500328	*B-L-H*	**416345**!
500328	*B-L-H*	455033
500328	*C-R*	**416345**!
500328	*C-R*	455033
500328	*FAIRB*	**416345**!
500328	*FAIRB*	455033
500328M1	*C-R*	**416345**!
500328M1	*C-R*	455033
50032M1	*C-R*	455020
50032S	*SPG*	**471570**!
50033	*SPG*	450033
500330	*C-R*	**415034**!
500330M1	*C-R*	**415034**!
500331	*C-R*	204020
500331	*C-R*	204505!
50033207.5	*TROS*	**415027**
500333	*C-R*	**470712**
500334	*C-R*	**470712**
50033607.5	*TROS*	55028
50033608	*TROS*	55028
50033S	*SPG*	450033
50034	*C-R*	**415021**
50034	*SPG*	**474273**
50034007.5	*TROS*	370011A
50034011.5	*TROS*	**416125**!
500343	*C-R*	**471750**
500344	*C-R*	**471766**!
50034407.5	*TROS*	55030
500346	*C-R*	**471766**!
50034807.5	*TROS*	**416339**
50034807.5	*TROS*	455031!
50034810	*TROS*	**416339**
50034810	*TROS*	455031!
500349	*C-R*	7686S
50034M1	*C-R*	**415021**
50035	*CLARK*	**470898**!
500350	*C-R*	450165
500350	*C-R*	**471801**
500351	*C-R*	6370N
500352	*C-R*	**473423**
500354	*C-R*	**472826**!
500356	*C-R*	**472354**!
50035607.5	*TROS*	**416345**!
50035607.5	*TROS*	455033
500357	*C-R*	**472258**
500359	*C-R*	**473215**!
50036	*C-R*	455022
50036	*SPG*	**473415**
50036007.5	*TROS*	**415034**!
5003600X01	*WHITE*	**470380**!
500362	*C-R*	470950!
500362	*C-R*	6241S
500363	*C-R*	470950!
500363	*C-R*	6241S
500364	*C-R*	6952S=
500365	*C-R*	7245
500366	*C-R*	**473016**!
500367	*C-R*	**473225**!
500368	*C-R*	**473226**
50037	*SPG*	**471137**
500371	*C-R*	**481163**!
500372	*C-R*	**470625**!
500373	*C-R*	**470625**!
500374	*C-R*	**472185**!
500375	*C-R*	**472439**
500376	*C-R*	**450474**
500377	*SELAS*	5127
50038	*C-R*	**415023**
50038	*GR-DV*	**415023**
50038	*SPG*	450038
500380	*C-R*	**412119**!
500384	*C-R*	**415995**!
500385	*C-R*	**416345**!
500385	*C-R*	455033
50038M1	*C-R*	**471255**
50039	*SPG*	**450039**
500390	*C-R*	**471224**!
500391	*C-R*	**471224**!
500394	*C-R*	204008
500396	*C-R*	**473228**!
500397	*C-R*	**473234**!
50039S	*SPG*	**450039**
5003M1	*C-R*	**455019**!
5004	*C-R*	**415035**!
5004	*C-R*	**415035**
50040	*SPG*	**450040**
50040007.5	*TROS*	**415035**
500401	*C-R*	**473459**!
500401	*C-R*	**473459**
500403	*C-R*	41013S
500407	*C-R*	**410308**!
50040S	*SPG*	**450040**
50041	*SPG*	**450593**!
500411	*C-R*	**470565**!
500416	*C-R*	**410987**!
500416	*C-R*	450686
50041S	*SPG*	**450593**!
500420	*C-R*	100495
500420	*C-R*	**417349**
500423	*C-R*	**415995**!
500423	*C-R*	**415995**!
500424	*C-R*	**415085**!
500424	*C-R*	456648
500428	*C-R*	**471341**!
50043	*SPG*	**473419**
500433	*C-R*	**472157**
500433	*C-R*	**472157**!
500437	*C-R*	**472439**
50043S	*SPG*	**473419**
50044	*C-R*	**455134**!
50044	*SPG*	450044
500441	*C-R*	204017
500442	*C-R*	**473235**
500443	*C-R*	**450412**
500446	*C-R*	9613S
500448	*C-R*	**416239**!
50044M1	*C-R*	**455134**!
50045	*SPG*	**476838**!
50045S	*SPG*	**476838**!
50046	*C-R*	**415295**
50046M1	*C-R*	**415295**
50047	*SPG*	**473426**
500474	*C-R*	6489
500475	*C-R*	**473445**
500476	*C-R*	**471766**!
50047S	*SPG*	**473426**
50048	*SPG*	**450048**
500480	*C-R*	50199S
500480	*C-R*	6863S!
500482	*C-R*	**412920**!
500483	*C-R*	370030A
500484	*C-R*	**417538**
500485	*GMC*	**450173**
50049	*SPG*	**471750**!
500495	*C-R*	**471870**!
500496	*C-R*	**471264**!
500498	*C-R*	**330385**!
50049S	*SPG*	**471750**!
5004M1	*C-R*	**415035**!
5004M1	*C-R*	**415035**
5004T8	*C-R*	**415035**
5004T8	*C-R*	**415035**!
5005	*C-R*	**471442**!
500500	*C-R*	**471442**!
500503	*C-R*	**470954**
500507	*C-R*	**472311**!
500508	*C-R*	**451583**!
500509902	*EATON*	**417082**
500510	*C-R*	**472560N**
500514	*C-R*	**471737**=
500517	*C-R*	**471766**!
500519	*C-R*	**473227**
50052	*SPG*	**471354**!
500520	*C-R*	**473227**
500527	*C-R*	**471141**!
50052S	*SPG*	**471354**!
500530	*C-R*	**473197**
500535	*C-R*	455129
500537	*C-R*	**455297**
500539	*C-R*	6064
50054	*SPG*	450054
500541	*C-R*	41081S=
500543	*C-R*	6985
500545	*C-R*	6952S=
50055	*SPG*	**473215**!
500550	*C-R*	6245S=
500557	*C-R*	203008
50055S	*SPG*	**473215**!
500561	*C-R*	100495
500561	*C-R*	**417349**
500562	*C-R*	**417344**!
500563	*C-R*	**417485**
500565	*C-R*	**417158**!
500567	*C-R*	**415995**
500567	*C-R*	**415995**!
50057	*SPG*	**473225**!
500570	*C-R*	**417134**
500576	*C-R*	**415991**!
500576	*C-R*	**415991**
500577	*C-R*	**415437**
50057S	*SPG*	**473225**!
500580	*C-R*	**455134**!
500582	*C-R*	**472157**
500582	*C-R*	**472157**!
500585	*C-R*	455037
500586	*C-R*	455037
500589	*C-R*	**416888**!
50059	*SPG*	470059
50059	*SPG*	**470380**!
500590	*C-R*	**416888**!
500591	*C-R*	370023A
500594	*C-R*	**415371**
500595	*C-R*	**415138**!
500596	*C-R*	370036A
500596	*C-R*	370349A
500597	*C-R*	45637S
500598	*C-R*	**415058**
500599	*C-R*	415060
500599	*C-R*	455060
50059S	*SPG*	470059
50059S	*SPG*	**470380**!
50060	*GARLK*	**471442**!
500600	*C-R*	415064
500600	*UNIVE*	**415725**!

! Industrial Size/Type
= The U.S. customer service number is 877-4-TIMKEN. The Canadian customer service numbers are 800-565-4927 (English) and 800-565-0438 (French-Canadian).

Mfr. No.	Name	Zero Duplication or Recommended Industrial
500601	C-R	417269!
500602	C-R	417273
500603	C-R	416865!
500604	C-R	417262!
500605	C-R	414045!
500607	C-R	416107!
500607	C-R	455073
500608	C-R	7378
50061	SPG	470950!
50061	SPG	6241S
500611	C-R	416229
500613	C-R	416239!
500616	C-R	415379
50061S	SPG	470950!
50061S	SPG	6241S
50062	SPG	474264
500625	FAIRB	416865!
500625	UNIVE	416865!
500628	C-R	470898
500629	C-R	473467!
50062S	SPG	474264
50063	C-R	416865!
50063	SPG	471820
500630	C-R	471272!
500631	C-R	451143
500633	C-R	415899N
500633	C-R	416624
500634	C-R	410708
500636	C-R	415991
500636	C-R	455146!
500637	C-R	416664!
500639	C-R	417484!
50063S	SPG	471820
50064	SPG	471821!
500640	SELAS	5108
500642	C-R	417343!
500644	C-R	417344!
500645	C-R	417316!
500647	C-R	415007
500648	C-R	415960!
500649	C-R	455008
50064M1	C-R	415295
50064S	SPG	471821!
50065	C-R	416865*
50065	SPG	450065
500650	UNIVE	417541
500651	C-R	455008
500652	C-R	415960!
500653	C-R	455280
500656	C-R	417621!
500659	C-R	476470!
500659	C-R	476470
50065S	SPG	450065
50066	SPG	473367
50066	SPG	473367!
500662	C-R	412473!
500663	C-R	471192
500669	C-R	415995!
50066S	SPG	473367!
50066S	SPG	473367
50067	SPG	473228
500675	WHITE	470334!
500675	WHITE	50289
50067S	SPG	473228
50068	IRON	471192
50068	SPG	450068
500680	C-R	417343!
500680	WHITE	416125!
500683	WHITE	473460
500687	C-R	416125!
50069	IRON	473197
50069	SPG	473232
500690E	OLIVE	471424!
500690E	WHITE	471424!
500693	C-R	417353!
500697	C-R	417134
50069S	SPG	473232
50070	C-R	204509!
50070	IRON	473215!
50070	SPG	472185!
500700	C-R	6754S=
500701	C-R	415196!
500702	C-R	416137
500705	C-R	417538
500706	C-R	417247!
500707	C-R	416167!
500708	C-R	417267
50070S	SPG	472185!
50071	SPG	472439
500710	C-R	415645!
500710	C-R	455104
500711	C-R	417556
500713	C-R	417563
500715	C-R	455117
500717	C-R	417598
500718	C-R	417602!
50071S	SPG	472439
50072	GARLK	471526!
500725	CEMAC	476470
500728	CEMAC	472924!
50073	SPG	450073
500731	C-R	472299
500735	CEMAC	471192
500736	CEMAC	473367!
500736	CEMAC	473367
500739	C-R	415991
500739	C-R	455146!
50073S	SPG	450073
500741	C-R	415991
500741	C-R	455146!
500742	C-R	415379!
500742	C-R	415379
500743	C-R	415437!
500743	C-R	415437
500746	C-R	415023
500749	C-R	55030
500750	C-R	370002A
500751	C-R	415697!
500751	C-R	455547
500755	OLIVE	471442!
50076	SPG	470334!
500768	C-R	450467
500769	C-R	416444
50076S	SPG	470334!
50077	SPG	474281!
500771	C-R	474276!
5007738	EATON	6792=
500778	WHITE	470950!
500778	WHITE	6241S
500779	C-R	410694!
50077S	SPG	474281!
50078	SPG	473444
500781	C-R	415001!
500783	CONTI	455024
500787	C-R	471705!
500788	C-R	6832S
50078S	SPG	473444
500790	C-R	471760
500799	WHITE	455005
5008	C-R	324234V
500801	C-R	417563
500806	C-R	450269
50081	GARLK	471472!
500810	C-R	471651
500811	C-R	415027*
500817	C-R	483054N
50082	SPG	473238
500825	C-R	417520
500828	C-R	455197N
500829	C-R	415295
50082S	SPG	473238
50083	SPG	472924!
500831	C-R	415021
500832	C-R	455197N
500836	C-R	55199=
500839	C-R	6863S!
50083S	SPG	472924!
50084	SPG	450084!
500844	C-R	471647
500845	C-R	472951
500845	C-R	474252
500846	C-R	323138!
500847	C-R	472475
50084S	SPG	450084!
50085	SPG	470530!
500850	C-R	471766!
500853	C-R	471829
500854	C-R	471344
500855	C-R	471829
500857	C-R	7107A=
50085S	SPG	470530!
500861	C-R	451948
500863	C-R	6547
500865	C-R	473464!
500865	C-R	473464
500866	C-R	40101S
500867	C-R	412871!
50087	SPG	473313
500870	C-R	415458!
500872	C-R	411348!
500873	C-R	412473!
500879	C-R	203013
50087S	SPG	473313
50088	SPG	470088
500883	C-R	240414
500885	C-R	415234!
500887	C-R	470806
50088S	SPG	470088
50089	SPG	450089
500890	C-R	55692=
500893	C-R	7457N
500894	CHRYS	471141!
5009	NATL	471141!
50090	SPG	450090
500906	C-R	417600
500907	C-R	417507
500907	C-R	417507!
500908	C-R	417509
500909	C-R	455203
50092	SPG	473458!
500920	C-R	416167!
500921	C-R	415725!
500922	C-R	417278
500923	C-R	417262!
500927	C-R	416271!
50092S	SPG	473458!
500930	C-R	417541
500931	C-R	417546!
500932	C-R	417556
500934	C-R	455117
500936	C-R	415551
50094	SPG	473462
500944	C-R	470590
50095	C-R	416865!*
50095	SPG	473464!
50095	SPG	473464
500952	C-R	476470
500952	C-R	476470!
500958	C-R	480210!
50095S	SPG	473464!
50095S	SPG	473464
50096	SPG	416738!
50096	SPG	450096
500960	C-R	472185!
500966	C-R	470605!
500967	C-R	471344
50096S	SPG	416738!
50096S	SPG	450096
50097	SPG	413469!
500976	C-R	240319
500978	C-R	473313
50097S	SPG	413469!
50098	SPG	412943
500981	C-R	416332!
50098S	SPG	412943
50099	SPG	411253!
500997	C-R	471887
500999	C-R	417492
50099S	SPG	411253!
500BM4	C-R	415035*
500F38	C-R	415023
500F4	C-R	415035
500FM4	C-R	415035
500GF312	C-R	415025
500HL38	C-R	418028
500W324	C-R	416339
500W324	C-R	455031!
500W4	C-R	415035!
500W4	C-R	415035
500W4-M1	C-R	415035
500W4-M1	C-R	415035!
5010	C-R	471442
50100	C-R	416865!*
50100	SPG	410694!
501005	C-R	415995!
50100S	SPG	410694!
50101	SPG	412119!
5010107A	PUL	370036A
5010107U	PUL	370021A
5010107W	PUL	370030A
501011	C-R	471689!
501016	C-R	455121
50101S	SPG	412119!
50102	SPG	410102
501023	C-R	471787
501026	C-R	472924!
501027	C-R	473367!
501027	C-R	473367
501028	MAGNA	471255!
50102S	SPG	410102
50103	SPG	410987!
501030	C-R	415021
501032	C-R	455290
501033	C-R	473426
50103S	SPG	410987!
501041	C-R	471224!
50105	C-R	416865!*
50105	NATL	414045!
50107	SPG	473471
501080	C-R	472560N
501083	C-R	415991
501083	C-R	415991!
501096	C-R	472164
5010B	JN-MN	470088*
5011	C-R	471442!
5011035	WOOL	455480!
501109	C-R	473229
50110S	TROS	6754S=

! Industrial Size/Type * Minor Width Difference

= The U.S. customer service number is 877-4-TIMKEN. The Canadian customer service numbers are 800-565-4927 (English) and 800-565-0438 (French-Canadian).

Mfr. No.	Name	Zero Duplication or Recommended Industrial
50111	*SPG*	450111
50116	*C-R*	6090S
501120	*C-R*	**471442**!
50113	*TROS*	**417353**!
501141	*C-R*	**417597**
50115	*ESSIC*	**471341**!
50115	*SPG*	**473467**
50115S	*SPG*	**473467**
50116	*SPG*	**473450**
50116S	*SPG*	**473450**
50117	*SPG*	**472572**!
501177	*C-R*	340771
501178	*C-R*	240731
50117S	*SPG*	**472572**!
50118	*SPG*	**473449**
501180	*C-R*	**471413**
501181	*C-R*	7886S
501182	*C-R*	**353120**
501183	*C-R*	**330385**
501184	*C-R*	3103!
50118S	*SPG*	**473449**
50119	*SPG*	**471442**!
501191	*C-R*	**472354**!
501192	*C-R*	240356
501196	*SELAS*	2146
501197	*C-R*	**470954**!
501197	*SELAS*	2146
50119S	*SPG*	**471442**!
5011LA	*JN-MN*	**417621**!
5011LUP	*JN-MN*	**417621**!
50120	*SPG*	**471224**!
501201	*C-R*	441130
501203	*C-R*	5957S
501204	*C-R*	**470898**!
501209	*C-R*	6532S=
50120S	*SPG*	**471224**!
50121	*SPG*	**472409**!
501213	*C-R*	8792S
501219	*C-R*	340413
50121S	*SPG*	**472409**!
501222	*C-R*	42260S
501223	*C-R*	311189
501229	*C-R*	**254270**
501233	*C-R*	7018N=
501239	*C-R*	**415035**
501239	*C-R*	**415035**!
50124	*C-R*	380069A
50124	*C-R*	**416865**
501243	*C-R*	**471554**
501244	*C-R*	240027=
501260	*C-R*	3103!
501263	*C-R*	5951
501266	*C-R*	**350936**
501281	*C-R*	**470409**!
501281	*C-R*	50409
50129	*SPG*	450129
50129	*SPG*	**472826**!
501296	*C-R*	240119
50129S	*SPG*	450129
50129S	*SPG*	**472826**!
50130	*C-R*	**417278**
501312	*C-R*	340853
50132	*C-R*	**417278**
50132	*SPG*	**412920**!
50132S	*SPG*	**412920**!
50133	*C-R*	**417278**
50133	*SPG*	**450133**
501332	*C-R*	**473367**!
501332	*C-R*	**473367**
501333	*C-R*	5458
50133S	*SPG*	**450133**
50134	*C-R*	**417278**
501348	*C-R*	**471526**!
501349	*C-R*	**254287**
50135	*C-R*	**417278**
50135	*SPG*	**471192**
501350	*C-R*	340797
50135S	*SPG*	**471192**
50136	*SPG*	**470625**!
50136S	*SPG*	**470625**!
50137	*SPG*	**471529**
501379	*C-R*	7751H
501379E	*OLIVE*	**450765**!
501379E	*WHITE*	**450765**!
50137S	*SPG*	**471529**
50138	*SPG*	**473459**
50138S	*SPG*	**473459**
50139	*SPG*	**472234**
50139S	*SPG*	**472234**
50140	*SPG*	**471413**!
501406	*C-R*	6863S!
501417	*C-R*	240319
501418	*C-R*	8059S
501422	*C-R*	240470
50143	*SPG*	**450143**
501437	*C-R*	240435
501438	*C-R*	7412S
50144	*SPG*	**473226**
50144S	*SPG*	**473226**
50145	*SPG*	**473460**
501455	*C-R*	55337
50145S	*SPG*	**473460**
50147	*SPG*	450147
50148	*C-R*	**417541**
50148	*NATL*	**473463**
50149	*SPG*	40769S
501493	*ALLCH*	**473215**!
501499	*C-R*	240435
50150	*C-R*	**417541**
50150	*SPG*	**471750**!
501500	*C-R*	240698
501507	*C-R*	**412119**!
50151	*SPG*	**472560N**!
50152	*SPG*	**473205**
501536	*C-R*	240816
501537	*C-R*	240735
501538	*C-R*	5976S
50154	*SPG*	**473234**
50154S	*SPG*	**473234**
50155	*C-R*	**417541**
50155	*SPG*	**473447**
501554	*C-R*	240733
501557	*C-R*	7014S
50155S	*SPG*	**473447**
50156	*NATL*	350156
50156	*NATL*	**473096**
501573	*C-R*	340724!
501579	*C-R*	40286
50158	*SPG*	**471762**!
501580	*C-R*	340136
501582	*C-R*	6241S
501585	*C-R*	40566S
501586	*C-R*	40071S
50158S	*SPG*	**471762**!
50159	*SPG*	450159
50160	*SPG*	**471763**
501602	*C-R*	**470334**!
501607	*C-R*	**471272**!
501608	*C-R*	**473464**!
501608	*C-R*	**473464**
50160S	*SPG*	**471763**
50161	*SPG*	**471764**!
501610	*C-R*	**472157**!
501610	*C-R*	**472157**
501613	*C-R*	**415449**!
501614	*C-R*	6127
501615	*C-R*	6077
501619	*C-R*	200354
50161S	*SPG*	**471764**!
50162	*SPG*	**471765**!
501622	*C-R*	**417316**!
501623	*C-R*	**417262**!
501628	*C-R*	**471564**
50162S	*SPG*	**471765**!
50163	*SPG*	**471766**!
501632	*C-R*	**415449**!
501632	*C-R*	**415449**!
501633	*C-R*	**415001**!
501636	*C-R*	**417210**!
50163S	*SPG*	**471766**!
501643	*C-R*	**415458**!
501647	*C-R*	**450776**!
501649	*C-R*	**410308**!
50165	*SPG*	450165
50165	*SPG*	**471801**!
501653	*C-R*	44053
501659	*C-R*	**473228**!
50165S	*SPG*	450165
50165S	*SPG*	**471801**!
501663	*C-R*	203006!
501664	*C-R*	**470898**
501668	*C-R*	**455858**
501669	*C-R*	456618
50167	*C-R*	8126S
501671	*C-R*	**472185**!
501673	*C-R*	**470712**!
501675	*C-R*	345146
501678	*C-R*	**417357**
501678	*C-R*	455192!
501679	*C-R*	**455194**
50168	*C-R*	**417542**
50168	*DANA*	4525V
501683	*C-R*	**472924**!
501685	*C-R*	340771
501686	*C-R*	**451583**!
501687	*C-R*	**471564**
501689	*C-R*	**451583**!
50169	*SPG*	**473214**
501690	*C-R*	**480210**!
501690911AM	*CHALL*	**471272**!
501690993	*CHALL*	**415303**!
501691	*C-R*	50209
501695	*C-R*	**471705**!
501697	*C-R*	**471787**
501699	*C-R*	40169S
50169S	*SPG*	**473214**
5016LA	*JN-MN*	**416891**!*
50170	*C-R*	**417542**
501700	*C-R*	7886S
501705	*C-R*	**470898**
501706	*C-R*	203034
501709	*C-R*	442380
50171	*SPG*	**473016**!
501714	*C-R*	**416921**!
501718	*C-R*	**471255**!
50171S	*SPG*	**473016**!
50172	*C-R*	**417542**!
501722	*C-R*	**416476**!
501723	*C-R*	**416865**!
501724	*C-R*	**415066**
501725	*C-R*	417536
501726	*C-R*	45637S
501728	*C-R*	**415150**!
50173	*SPG*	**450173**
501733	*C-R*	**415027**
501733	*C-R*	**415027**!
501734	*C-R*	**415027**!
501734	*C-R*	**415027**
501735	*C-R*	**415379**
501735	*C-R*	**415379**!
501736	*C-R*	**455079**!
501737	*C-R*	**417316**!
501745	*C-R*	**471736**
501746	*C-R*	**470898***
501748	*C-R*	200640
50175	*TROS*	7600S
501754	*C-R*	**471281**!
50176	*AM WH*	**417316**!
501764	*C-R*	**471567**!
501767	*C-R*	**471689**!
501768	*C-R*	**471689**!
501769	*C-R*	204005
50177	*AM WH*	50528
50177	*SPG*	450177
501773	*C-R*	**471760**
501778	*C-R*	**451817**
501780	*C-R*	**473234**
501782	*C-R*	**472164**!
501784	*C-R*	**472319**
501786	*C-R*	203002
501788	*C-R*	450430
501789	*C-R*	**451948**
501790	*C-R*	**472924**!
501791	*C-R*	**470530**!
501796	*C-R*	**416271**!
501799	*C-R*	**415995**!
50180	*C-R*	417543
501802	*C-R*	**415027**
501802	*C-R*	**415027**!
501803	*C-R*	**455189**
501805	*C-R*	**455583N**!
501807	*C-R*	**471442**!
501808	*C-R*	**471551**!
501811E	*MINNM*	**471887**
501811E	*OLIVE*	**471887**
501815	*C-R*	**473227**!
501817	*C-R*	**470625**!
501817902	*EATON*	40085S
501818	*C-R*	470059
501818	*C-R*	**470380**!
50182	*SPG*	**471747**!
501820	*C-R*	410059
501820	*C-R*	**470380**!
5018200	*CALI*	**417223**
501821	*C-R*	**473228**
501824	*C-R*	**472924**!
50182S	*SPG*	**471747**!
50183	*ESSIC*	**472179**
50183	*SPG*	**472179**
501831	*C-R*	**415995**!
501833	*C-R*	**415991**
501833	*C-R*	455146!
501834	*C-R*	**416024**
501835	*C-R*	45031S
501837	*C-R*	**415036**
501838	*C-R*	**417621**!
501839	*C-R*	**412473**!
50183S	*SPG*	**472179**
50184	*SPG*	**471571**
501840	*C-R*	470059
501840	*C-R*	**470380**!
501841	*C-R*	**470354**
501842	*C-R*	**470354**
501843	*C-R*	**415437**
501843	*C-R*	**415437**!
501845	*C-R*	6863S!
501847	*C-R*	**471076**
501848	*C-R*	**474278**!

! Industrial Size/Type * Minor Width Difference

= The U.S. customer service number is 877-4-TIMKEN. The Canadian customer service numbers are 800-565-4927 (English) and 800-565-0438 (French-Canadian).

Mfr. No.	Name	Zero Duplication or Recommended Industrial
50184S	SPG	471571
50185	C-R	417544
50185	SPG	473229
501850	C-R	1126
501850	C-R	474276!
501854	C-R	474256
501854	CHRYS	474256
501857	C-R	7600S
501858	C-R	472492!
501859	C-R	470898
50185S	SPG	473229
50186	SPG	473236!
501860	C-R	450326
501863	C-R	415483!
501864	C-R	416273!
501866	C-R	415259!
501867	C-R	415991
501868	C-R	345035
50186S	SPG	473236!
50187	SPG	471619!
501870	C-R	75251S
501871	C-R	415327
501872	C-R	470334!
501873	C-R	471763
501874	C-R	473231!
501876	C-R	450065
501877	C-R	472164!
501878	C-R	470530!
501879	C-R	50631
50187S	SPG	471619!
501880	C-R	416273!
501881	C-R	200600
501882	C-R	415449!
501885	C-R	42763
501887	C-R	472016
50188S	SPG	450188
50189	SPG	471692!
501890	C-R	417210!
501891	C-R	417171!
501895	C-R	415483!
501896	C-R	472636!
501898	C-R	473467!
501899	C-R	471141!
50189S	SPG	471692!
501900	C-R	473447
501901	C-R	210914
501902	C-R	4148
501902	C-R	471424!
501903	C-R	471424!
501904	C-R	471344
501905	C-R	204007=
501906	C-R	6489
501908	C-R	205017
501917	C-R	203005!
501917	C-R	205005
501918	C-R	471633!
50192	SPG	473473
501922	C-R	254287
501922903	EATON	415213N
501922904	EATON	455134!
501923902	Y-T	417366!
501925901	Y-T	J1127
501925902	EATON	J1105
501925903	EATON	J1111
501925905	EATON	J1134
501925906	EATON	J1132
501925908	EATON	J1136
501925910	Y-T	J1129*
501927	C-R	480210!
501928	C-R	474253!
501928	C-R	474253
501929	C-R	480210!
501933	C-R	471737=
501934	C-R	472475
501938	C-R	40059S
50194	SPG	473010
501940	C-R	472299
501942	C-R	50501
501943	CONTI	471651
501944	C-R	6954S
501944	CONTI	471267!
501946	CONTI	473414
501947	C-R	200110
501948	C-R	40337S
501949	C-R	410987!
50194S	SPG	473010
50195	C-R	417545
50195	NATL	470195!
501950	C-R	415483!
501952	C-R	415458!
501955	C-R	455008
501956	C-R	415995!
501962	CONTI	481650
501963	CONTI	471553!
501964	C-R	473010!
501964	CONTI	471272!
501965	C-R	472179!
501966	C-R	473452
501968	C-R	472397!
501969	C-R	451078!
501969	CONTI	471539!
50197	SPG	471103!
501970	C-R	415995!
501974	C-R	473236!
501975	C-R	44052
501977	C-R	473234!
501978	C-R	3210
501980	C-R	474278!
501983	C-R	7208S
501986	C-R	473243
501987	C-R	40973S
501988	C-R	473444!
50199	SPG	50199S!
50199	SPG	6863S!
501992	C-R	5759=
501993	C-R	473234!
501994	C-R	6815
501997	C-R	473237!
50199S	NATL	6863S
501G324	C-R	45031S
501HL38	C-R	418028
502	UNIVE	417546!
50200	NATL	320457
502000	C-R	450593!
502000	CONTI	416956
502002	C-R	476470!
502004	C-R	480630!
502005	C-R	410737!
502007	C-R	7107A=
502008	C-R	6960
50201	GARLK	471466!
502010	C-R	415991!
502010	C-R	415991
502015	C-R	416364!
50202	SPG	472705!
502021	CHRYS	415458
502021	CONTI	415458!
502021	H-S	415458!
50202S	SPG	472705!
502038	CONTI	417158!
50204	SPG	471231!
502043	C-R	6241S
502045	C-R	415371
502047	C-R	6245S=
50204S	SPG	471231!
502056	C-R	416153!
502058	C-R	417247!
502059	C-R	416154!
502061	C-R	5578
502068	C-R	418028!
502069	C-R	412119
50207	NATL	470207
502075	C-R	5452
502078	C-R	352541
50208	SPG	451583!
502081	C-R	5406
502083	CONTI	471466!
502083	H-S	471466!
50208S	SPG	451583!
502090M1	MASSE	474272
502098	C-R	471808!
502099	C-R	471808!
502100	C-R	240435
502100	CONTI	471648
502104	AVCO	471765!
502104	CONTI	471765!
502104	H-S	471765!
502104	HERCU	471765!
502109	C-R	6785
502110	C-R	417603!
502112	C-R	416394
502113	C-R	417604
502117	C-R	417567
50212	SPG	481644
502120	C-R	415128
502126	CONTI	471192
50213	GARLK	471264!
502131	C-R	471818
502132	C-R	40183S!
502133	C-R	416476!
502136	C-R	6489
502139	C-R	415234!
50214	SPG	473414
502141	C-R	470764!
502141	C-R	50764
502145	C-R	471646!
502148	C-R	55301S
502149	C-R	455480!
50215	SPG	471646!
502153	C-R	417507
502153	C-R	417507!
502155	C-R	416892!
502156	C-R	472397!
50215S	SPG	471646!
50216S	TROS	455037
50217	SPG	471647
502171	C-R	473215!
50217S	SPG	471647
502180	C-R	6336S
50219	SPG	471649!
502192	CONTI	473214!
502196	C-R	5405
50219S	SPG	471649!
5022	SPG	224835
5022	SPG	48X68X10!
50220	SPG	481650
502203	C-R	450472!
502210	C-R	415072
502212	C-R	417210!
502214	C-R	450040
502217	C-R	472015!
502219	C-R	471498
50222	SPG	471684!
502220	C-R	415150!
502221	C-R	455253
502222	C-R	476470
502223	C-R	417498
502225	C-R	472150
502229	C-R	472193!
50222S	SPG	471684!
502236	C-R	50402
502245	C-R	6872S
50225	GARLK	471255!
502252	C-R	5408
502259	C-R	416664!
50226	SPG	470590
502262	C-R	415938
50226S	SPG	470590
502272	C-R	472394
502276	CONTI	473229
502280	H-S	240356
502285	AVCO	472150
502285	C-R	414045!
502285	CONTI	472150
502285	H-S	472150
502285	HERCU	472150
5022LA	JN-MN	473466
5022LPD	JN-MN	473466
5022LUP	JN-MN	473466
50230	ESSIC	471689!
50230	SPG	471689!
502303	C-R	476470
502305	C-R	45825S
502308	C-R	471466!
50230S	SPG	471689!
502317	C-R	350435
50232	SPG	471705!
502327	C-R	471649!
502328	C-R	471649!
50232S	SPG	471705!
50233	SPG	471733
502330	C-R	471705!
502333	C-R	471763
502334	C-R	480630
502337	C-R	331107N
50233S	SPG	471733
502345	C-R	472636!
502347	C-R	340815
502351	C-R	471765!
502352	C-R	472213
502353	C-R	470059
502353	C-R	470380!
502354	C-R	473213!
502355	C-R	473231!
502358	C-R	473228!
50236	SPG	470712!
502360	C-R	472070
502362	C-R	40183S!
502365	C-R	417366!
502368	C-R	471272!
50236S	SPG	470712!
50237	GARLK	471564
50237	SPG	471744!
502370	C-R	410102
502372	C-R	45827S
502375	C-R	415350
502376	C-R	415303!
502380	C-R	417158!
502381	C-R	417487
502384	C-R	417366!
502387	C-R	471795
502388	C-R	471795
502389	C-R	470625!
50239	SPG	450342
502391	C-R	455136
502392	C-R	415449!
502393	C-R	415449!
50239S	SPG	450342

! Industrial Size/Type * Minor Width Difference

= The U.S. customer service number is 877-4-TIMKEN. The Canadian customer service numbers are 800-565-4927 (English) and 800-565-0438 (French-Canadian).

Mfr. No.	Name	Zero Duplication or Recommended Industrial
5023LA	*JN-MN*	**411245**!
502400	*C-R*	**481443**!
50241	*SPG*	**471785**!
502417	*C-R*	450467
50241S	*SPG*	**471785**!
502424	*C-R*	**470898***
502426	*C-R*	**417344**!
502436	*C-R*	**470954**
502439	*C-R*	417267
50244	*SPG*	**471787**!
502441	*AVCO*	**471567**!
502441	*CONTI*	**471567**!
502441	*H-S*	**471567**!
502441	*HERCU*	**471567**!
502442	*C-R*	**481568**!
502443	*C-R*	**471498**
502447	*C-R*	**471413**
50244S	*SPG*	**471787**!
50245	*SPG*	**471795**
502453	*C-R*	**471760**
502454	*C-R*	**450400**
502457	*C-R*	**474256**
502458	*C-R*	40494S
50245S	*HERCU*	**471795**
50245S	*SPG*	**471795**
502460	*C-R*	**473234**!
502464	*C-R*	41013S
502465	*C-R*	**472179**
502466	*C-R*	450285
502469	*C-R*	40627S=
502470	*C-R*	**470898**
502471	*C-R*	**473244**
502477	*C-R*	**470954**
502478	*C-R*	200763
502479	*C-R*	**411394**!
50247S	*SPG*	**473211**!
502480	*C-R*	493291
502486	*C-R*	**415001**!
502487	*C-R*	**455151**
50248S	*SPG*	473436
502491	*C-R*	**416921**!
502495	*C-R*	**417205**!
502496	*C-R*	**417967**!
502498	*C-R*	**415142**
502500	*C-R*	**470712**!
502501	*C-R*	450129
502501	*C-R*	**472826**!
502502	*C-R*	**470487**!
502503	*C-R*	450073
502506	*C-R*	**472179**
502507	*C-R*	**471827**
502508	*C-R*	**473473**
502509	*C-R*	**472016**
502512	*C-R*	**410496**!
502517	*C-R*	6930
502518	*C-R*	**417351**!
502524	*C-R*	**415447**
502529	*C-R*	**473229**
502530	*C-R*	**473228**
502531	*C-R*	**410190**
502534	*C-R*	**473449**
502536	*C-R*	**472924**
502540	*C-R*	**472015**!
502541	*C-R*	**473462**
502543	*C-R*	**410737**!
502544	*C-R*	**472636**!
502548	*C-R*	**416271**!
502550	*C-R*	**417350**!
502557	*C-R*	7866S
502565	*CONTI*	**473444**
502571	*C-R*	**471571**
502573	*C-R*	**471224**!
502574	*C-R*	**471649**!
502575	*C-R*	**471652**
502578	*C-R*	**474278**!
502579	*C-R*	**470590**
50258	*SPG*	**482253**
502581	*C-R*	**471689**!
502582	*C-R*	**472354**!
502585	*C-R*	**471766**!
502589	*C-R*	**473517**!
50258S	*SPG*	**482253**
502591	*C-R*	**473016**!
502592	*C-R*	**473213**!
5026	*C-R*	**471526**!
50260	*SPG*	450260
502604	*C-R*	**471231**!
502607	*C-R*	**450188**
502608	*C-R*	**472354**!
502609	*C-R*	**471764**!
502610	*C-R*	**471192**
502611	*C-R*	**471801**!
502616	*C-R*	450275
50262	*SPG*	**470682**
502621	*C-R*	**410987**!
502624	*C-R*	**415349**
502626	*C-R*	55524
502627	*C-R*	55155=
502628	*C-R*	**416288**
502629	*C-R*	**416288**!
50262S	*SPG*	**470682**
502630	*C-R*	**417492**
502631	*C-R*	**415498**
502634	*C-R*	**415937**!
502637	*C-R*	**450593**!
502639	*CONTI*	**471192**
502642	*C-R*	**350364**
502649	*AVCO*	**471192**
502649	*CONTI*	**471192**
502649	*H-S*	**471192**
50265	*SPG*	**473235**!
50265S	*SPG*	**473235**!
50267	*SPG*	**472070**
502671	*C-R*	**471413**
502679	*C-R*	**472258**
50267S	*SPG*	**472070**
502680	*C-R*	**471760**
502681	*C-R*	**471760**
502689	*C-R*	42352S
50269	*CLARK*	**472924**!
50269	*SPG*	450269
502690	*C-R*	**474255**
502691	*C-R*	**473212**!
502693	*C-R*	**473215**!
502697	*C-R*	**450065**
502698	*C-R*	50327
5026LA	*JN-MN*	**471766**!
502702	*C-R*	**472164**!
502712	*C-R*	**473450**!
502713	*C-R*	**472144**!
502715	*C-R*	**472924**!
502717	*C-R*	**472397**!
502726	*ALLCH*	**411253**!
502730	*C-R*	**410987**=
502731	*C-R*	**411330**!
502732	*C-R*	**412861**
502735	*C-R*	**415449**!
50273S	*SPG*	**450273**
50274	*SPG*	450274
502745	*C-R*	**417487**
502747	*C-R*	**412473**!
502750	*C-R*	**417493**
502754	*C-R*	**417211**!
502759	*C-R*	**417520**
50275S	*SPG*	450275
502760	*C-R*	417516
502765	*C-R*	**473225**!
502774	*C-R*	**412119**!
502776	*C-R*	**412473**!
502782	*C-R*	9613S
502783	*C-R*	**474272**!
502783	*C-R*	**474272**
502784	*C-R*	**473467**
502785	*C-R*	**410987**!
502788	*C-R*	**471442**!
50279	*CLARK*	**471766**!
50279	*SPG*	**450279**
502793	*C-R*	**473438**
502798	*C-R*	340823
502799	*C-R*	**472193**!
5027LUP	*JN-MN*	**417433**!
50280	*CLARK*	**473243**
50280	*SPG*	450280
502800	*C-R*	40268=
502801	*C-R*	40071S
502803	*C-R*	451469
502805	*C-R*	**471870**!
50280S	*SPG*	450280
502810	*C-R*	**472144**!
502816	*C-R*	**471984**
502820	*C-R*	**412040**
502821	*C-R*	**471271**!
502822	*C-R*	**413247**!
502825	*C-R*	**416271**!
502826	*C-R*	**415449**!
502827	*C-R*	**417474**
502828	*C-R*	**410825**
502829	*C-R*	**455005**
502830	*C-R*	**417480**!
502831	*C-R*	**415082**
502832	*C-R*	**417350**!
502832	*NAPCO*	**471341**!
502836	*C-R*	**416654**
502837	*C-R*	**476470**
502838	*C-R*	**416624**!
502843	*C-R*	**415991**!
502843	*C-R*	**415991**
502844	*C-R*	**416865**!
502846	*C-R*	45187S
50285	*SPG*	450285
502850	*C-R*	**415025**
502852	*C-R*	**416892**!
502853	*C-R*	**415284**
502854	*C-R*	**416865**!
502855	*C-R*	**471835**!
502856	*C-R*	**471141**!
502857	*C-R*	**470898***
50286	*SPG*	**474274**
502860	*C-R*	**471733**
502864	*C-R*	240119
502869	*C-R*	**473228**
50286S	*SPG*	**474274**
502871	*C-R*	**414045**!
502872	*C-R*	**411330**!
502873	*C-R*	**415995**!*
502873	*C-R*	**415995**!
502879	*C-R*	**416282**
502881	*C-R*	7376=
502888	*C-R*	**471649**!
502898	*C-R*	**416738**!
502898	*C-R*	450096
502899	*C-R*	210945
50290	*TROS*	**472492**!
502901	*C-R*	**417621**!
502902	*C-R*	**415025**
502905	*C-R*	**410308**
50291	*SPG*	**471141**!
502917	*C-R*	**451583**!
502918	*C-R*	**471733**
50291S	*SPG*	**471141**!
50292	*TROS*	**473238**!
502921	*C-R*	6241S
502928	*C-R*	**473238**
502929	*C-R*	**450084**!
502929800	*EATON*	**473231**!
502933	*C-R*	**413247**!
502937	*C-R*	**470774**!
502938	*C-R*	**415960**
502939	*C-R*	**472810**!
502945	*C-R*	**471472**=
50295	*SPG*	**472144**!
502952	*C-R*	**481397**
502953	*C-R*	**471688**
502956	*C-R*	**471733**
502957	*C-R*	205004
50295S	*SPG*	**472144**!
502963	*C-R*	**472213**
502964	*C-R*	**473231**!
502965	*C-R*	**473237**!
50298	*SPG*	**473239**
502984	*C-R*	**418028**
502984	*C-R*	455137!
502987	*C-R*	**415991**
50298S	*SPG*	**473239**
502990	*C-R*	**416891**!
502993	*C-R*	**470712**!
502994	*C-R*	**473214***
502994	*C-R*	**473214**
502995	*C-R*	470059
502995	*C-R*	**470380**!
502997	*C-R*	**450666**
50299S	*TROS*	**473241**
50300	*SPG*	**472394**
503000	*C-R*	**415458**!
503003	*C-R*	6532S=
503006	*C-R*	**417196**!
503008	*C-R*	**417254**
503009	*C-R*	7006S
50300S	*SPG*	**472394**
50301	*SPG*	**472397**!
5030128	*EATON*	**473237**!
50301S	*SPG*	**472397**!
50302	*SPG*	**472012**
503020	*C-R*	6781
503022	*C-R*	**472234**
503026	*C-R*	**415995**!
503027	*C-R*	8370S
503029	*C-R*	**470088**
50302S	*SPG*	**472012**
50303	*SPG*	**472015**!
503030	*C-R*	**472636**!
503031	*C-R*	**415379**!
503034	*C-R*	**471553**!
503038	*C-R*	**471689**!
503039	*C-R*	**473214**
50303S	*SPG*	**472015**!
503043E	*OLIVE*	204047=
503044R1	*BUC-E*	**412040**
503046	*C-R*	**472164**!
503047	*C-R*	**471862**
503048	*C-R*	**473179**
503050	*C-R*	**471750**!
5030591050	*GOETZ*	710289
50306	*SPG*	**473461**!
5030604550	*GOETZ*	710288
503063	*C-R*	**415034**!
503066	*C-R*	**472572**!
503067	*C-R*	6855N=

! Industrial Size/Type * Minor Width Difference

= The U.S. customer service number is 877-4-TIMKEN. The Canadian customer service numbers are 800-565-4927 (English) and 800-565-0438 (French-Canadian).

Mfr. No.	Name	Zero Duplication or Recommended Industrial
5030679950	GOETZ	710290
50306S	SPG	**473461**!
50307	SPG	**450307**
50307S	SPG	**450307**
50308	SPG	**410308**!
50308S	SPG	**410308**!
50309	SPG	**471391**!
50309S	SPG	**471391**!
503113	C-R	240023
503114	C-R	340787
503117	C-R	**471270**!
503119	C-R	345146
50311S	SPG	450311
50312	SPG	**472016**
503128	C-R	**471570**!
50312N	SPG	**472016**
50312S	SPG	**472016**
50313	SPG	450313
50313S	SPG	450313
503144	C-R	**450593**!
503149	C-R	204008
50315	SPG	**473245**!
503150	C-R	**415124**
503151	C-R	**455123**
503154	C-R	8139
503159	C-R	**450133**
50316	SPG	**472636**!
503160	C-R	**417238**
503161	C-R	455024
503163	C-R	45013S
50316S	SPG	**472636**!
50317	SPG	**411394**!
503173	C-R	**473179**
50317S	SPG	**411394**!
503187	C-R	**473215**!
503189	C-R	**415437**
50319	SPG	**481163**!
50320	SPG	**473475**
503205	C-R	**471567**!
503218	C-R	**415458**!
50322	SPG	**412040**
503221	C-R	**416865**!
503223	C-R	**455134**!
503225	C-R	**476838**!
50322R1	IH	6090S
50322S	SPG	**412040**
503232	C-R	470950!
503232	C-R	6241S
503233	C-R	**473445**
503238	C-R	**472144**!
503242	C-R	**413246**
503247	C-R	**471649**!
503259	C-R	**417492**
50326	SPG	**450326**
503266	C-R	**471354**!
503270	C-R	**418028**
503270	C-R	455137!
503279	C-R	**412943**
50328	ESSIC	470328
50328	ESSIC	**481213**!
503281	C-R	45825S
503282	C-R	**416332**!
503283	C-R	**415351**!
503289	C-R	**473464**!
503289	C-R	**473464**
50329	SPG	**412871**!
503293	C-R	**417134**
50329S	SPG	**412871**!
50331	HYST	**473473**
50331NA	SPG	**473452**
50332	SPG	**450332**
503344	C-R	**473238**
503348	C-R	205035
50335	SPG	450335
50336	SPG	**474255**
503361	C-R	**418028**
503365	C-R	8635S
503368	C-R	**470530**!
50336S	SPG	**474255**
503372	C-R	**415991**
503372	C-R	455146!
50339	SPG	**450339**
503400	C-R	455612=
503402	C-R	**473367**!
503408	C-R	**471538**!
50340S	SPG	**450340**
50341	SPG	**450341**
503410	C-R	**471553**!
503416	C-R	**471267**!
503419	C-R	**471553**!
503421	C-R	**471553**!
50343	SPG	450343
503431	C-R	**471579**
503432	C-R	**450040**
503435	C-R	**481568**!
503440	C-R	**471567**!
503442	C-R	**470390**
503443	C-R	**471646**!
503444	C-R	**471571**
503448	C-R	**471553**!
503450	C-R	**481568**!
503452	C-R	**470506**!
503455	C-R	**471529**
503466	C-R	**481568**!
503468	C-R	**451583**!
50347	SPG	**474254**
503470	C-R	**471538**!
503474	C-R	**471224**
503479	C-R	**470506**!
50347S	SPG	**474254**
503480	C-R	**471571**
503481	C-R	**471648**
503482	C-R	**471647**
503490	C-R	473414
503491	C-R	**474253**
503491	C-R	**474253***
503495	C-R	**450588**!
503499	C-R	**481568**!
5035	C-R	**471526**!
50350	SPG	**413247**!
50350S	SPG	**413247**!
50351	SPG	**471504**!
503514	C-R	6897=
50351S	SPG	**471504**!
50352	SPG	**472164**!
503521	C-R	**410190**
503526	C-R	**473317**
503528	C-R	**471391**!
503529	C-R	**473462**
50352S	SPG	**472164**!
50354	SPG	**470354**
503548	C-R	**417022**
503549	ALLCH	**471141**!
503549	C-R	415656
50354S	SPG	**470354**
503550	C-R	**410825**
503551	C-R	55236
50356	NATL	**474278**!
50356	WMG	**474278**!
503562	C-R	**474253***
503562	C-R	**474253**
503575	C-R	**471498**
503577	C-R	**471571**
50358	SPG	**473231**
503582	C-R	470645
503584	C-R	**471579**
503585	C-R	**471539**!
50358S	SPG	**473231**
50359	SPG	**473448**
503591	C-R	**473232**!
503593	C-R	**482253**
503598	C-R	450516
50359S	SPG	**473448**
50360	SPG	**471870**!
503600	C-R	**474274**
503604	C-R	473436
503607	C-R	**473224**!
503608	C-R	**472258**!
50360S	SPG	**471870**!
50361	SPG	**472193**!
503612	C-R	**472354**!
503614	C-R	**473228**
503617	C-R	473437
503620	C-R	353141!
503621	C-R	**473228**
503623	C-R	**471192**
503624	C-R	**470625**!
50362S	SPG	**450362**
503630	C-R	40185
503635	C-R	40438S
50364	SPG	**350364**
503644	C-R	**473444**
503645	C-R	**450984**
503646	C-R	**473215**!
503647	C-R	40568S
503649	C-R	**474274**
50365	SPG	**470898**
503651	C-R	**473367**!
503652	C-R	**450523**
503658	C-R	5871
50365S	SPG	**470898**
503671	C-R	**470354**
503672	C-R	**470354**
503675	C-R	**416107**!
503675	C-R	455073
503699	C-R	6643S
503711	C-R	**471316**
503725	C-R	80313
503727	C-R	**473231**!
503728	C-R	353141!
503729	C-R	415060
503729	C-R	455060
50373	SPG	**451948**
503730	C-R	**417556**
503735	C-R	470328
503735	C-R	**481213**!
503736	C-R	40520S
503737	C-R	**471526**!
50373S	SPG	**451948**
50374	SPG	**411500**
503741	C-R	40059S
50374S	SPG	**411500**
50375	SPG	6936S
503750	C-R	6663S
50375S	SPG	450375
50375S	SPG	6936S
50375S	SPG	9845
503762	C-R	**473473**
503766	C-R	291295
503772	C-R	**472144**!
503779	C-R	**472924**
503787	C-R	**452222**!
503788	C-R	**472287**!
503789	C-R	**416297**
503801	C-R	**471647**
503804	C-R	**471648**
503808	C-R	**481568**!
503809	C-R	**471647**
50381	SPG	**471652**
503811	C-R	450033
503812	C-R	**481568**!
503814	C-R	**471579**
50381S	SPG	**471652**
50382	SPG	**474276**!
503825	C-R	**481864**
503828	C-R	**482253**
503831	C-R	**473367**!
50385	SPG	**330385**!
503852	C-R	**417316**!
50385S	NATL	240385
503860	C-R	**472185**!
503872	C-R	**472299**
503877	C-R	**473235**!
503880	C-R	**472287**!
50389	SPG	**472492**!
503894	C-R	**473211**!
503895	C-R	**473228**
503898	C-R	**473232**!
50389S	SPG	**472492**!
503908	C-R	450275
503909	C-R	**471821**!
50391	CLARK	**473229**
503912	C-R	**474264**
503913	C-R	**473442**!
503916	C-R	450274
503917	C-R	**473232**!
503924	C-R	**473225**!
503925	C-R	**470596**
50393	CLARK	**471765**!
503936M1	MASSE	JV1166
503939M1	MASSE	200851
50394	CLARK	**471835**!
50394	SPG	**473227**
503946	C-R	**472018**
503949	C-R	**472029**
50394S	SPG	**473227**
50395	NOK	710262
50395	SPG	**472354**!
503954	C-R	**412040**
503955	C-R	7216
50396	NOK	710263
503961	C-R	**412871**!
503965	C-R	**470605**!
503966	C-R	**413248**
503974	C-R	**415302**
503979	C-R	**415449**!
50398	SPG	450398
50398	SPG	**471267**!
503981	C-R	**417073**
503982	C-R	**415001**!
503986	C-R	**416273**!
503987	C-R	**415988**
503988	C-R	**415458**!
50398S	SPG	450398
50398S	SPG	**471267**!
503993	C-R	**415988**
503VB7	MARI	**416865**!
504	UNIVE	**415645**!
504	UNIVE	455104
50400	SPG	**450400**
504003	ROSS	**472560N**!
504004	C-R	**415082**
504004	ROSS	**474278**!
504005	ROSS	**323138**!
504006	ROSS	**474276**
504007	ROSS	**450400**
50400S	SPG	**450400**
504010	C-R	55469

! Industrial Size/Type * Minor Width Difference

= The U.S. customer service number is 877-4-TIMKEN. The Canadian customer service numbers are 800-565-4927 (English) and 800-565-0438 (French-Canadian).

Mfr. No.	Name	Zero Duplication or Recommended Industrial
504012	C-R	410496!
504014	C-R	411245!
504015	C-R	415483!
504016	C-R	416664!
504017	C-R	415001!
504018	C-R	415001!
504020	C-R	455079!
504022	C-R	417343!
504024	C-R	417344!
504025	C-R	415960
504026	C-R	415007
50403	SPG	470774!
504030	C-R	417134
504034	C-R	6270
504036	C-R	417267
504038	C-R	417082
50403S	SPG	470774!
504046	C-R	415498
504047	C-R	415437
504054	C-R	415035
504055	C-R	415035
504062	C-R	415035
504062	C-R	415035!
504066	C-R	455189
504068	C-R	327303!
504069	C-R	455191
504071	C-R	417357
504071	C-R	455192!
504076	C-R	417506
504078	C-R	416891!
50408	CLARK	471141!
504081	C-R	416892
504083	C-R	455251H
504086	C-R	417533
504088	C-R	415047
504089	C-R	417525
50409	CLARK	471141!
50409	NATL	470409!
504091	C-R	455251H
504095	C-R	415351!
504099	C-R	417269!
504100	C-R	417273
504104	C-R	6465
50412	SPG	450412
504123	C-R	418028
504123	C-R	455137!
504124	C-R	475348N
50413	NATL	353132
504132	C-R	471549!
5041320	GMC	471466!
50414	SPG	472311!
50415	CLARK	470898!
50415	SPG	450415
50417	CLARK	410694!
504173	C-R	450666
504191	C-R	471504!
50421	SPG	450765!
504221	C-R	473245!
504223C1	IH	473474=
504229C1	IH	413247=
504231	C-R	410102
504232	C-R	470530!
504237	C-R	471649!
504238	ALLCH	471762!
504238	C-R	413246
504239	ALLCH	473234
504239-C1	IH	471267!
50424	CUMMI	473228
50424	OLIVE	473228
50424	WHITE	473228
504251	C-R	5924
504252	C-R	471413
504258	C-R	473231
50427	GARLK	470954!
504281	C-R	710028
504285	C-R	710030
50430	SPG	450430
504301	C-R	455019!
504303	C-R	471354!
50431	SPG	471539!
50431S	SPG	471539!
504326	C-R	7607
50433	GEHL	471539!
50433	SPG	471138!
504332	GMC	6064
50433S	SPG	471138!
50435	NATL	350435
50438	SPG	472299
504388	C-R	410524
50438S	SPG	472299
50441	SPG	471341!
50441S	SPG	471341!
50442	WHITE	410708
504424	C-R	472409
50444	SPG	471835!
504444	C-R	471765!
50444S	SPG	471835!
504451	C-R	414045!
50446	GARLK	471554!
50446	SPG	450446
504487	C-R	417602!
50449	SPG	471270!
504498	C-R	200110
50449S	SPG	471270!
5045	C-R	471526=
5045	C-R	471526
504502	C-R	418029!
504504	C-R	415351!
50451	SPG	480630!
504516	C-R	417356!
504516	C-R	455188
50452	SPG	473197
50452S	SPG	473197
50453	SPG	473224!
50453S	SPG	473224!
50455	SPG	472319
504554	C-R	415142
50456	SPG	450456!
50457	SPG	450457
504579	C-R	415483!
50457S	SPG	450457
50458	GARLK	471567!
504592	C-R	473179
5046	C-R	471526!
50460	CLARK	472354!
50461	SPG	473440
50461S	SPG	473440
50463	SPG	450463
504631	SPICE	473215!
504632	SPICE	472636!
504636	MAGNA	471554!
504637	MAGNA	471224!
504637	UNIVE	417546!
504638	MICH	417546!
50464S	TROS	6855N=
50467	SPG	450467
50469	SPG	481537
50470	SPG	472810!
50472	SPG	450472!
50472S	SPG	450472!
50474	SPG	450474
50476	NATL	471344
504781	C-R	6936S
50479	SPG	473445
50479S	SPG	473445
50479SA	SPG	473445
50479SA	Y-T	473445
50480	SPG	323138!
50480S	NATL	323138!
50482	SPG	450482
50482S	SPG	450482
5048340	AMC	5759=
50485	SPG	411330!
50487	SPG	470487!
50487S	SPG	470487!
50489S	SPG	473244
50491	NATL	480491
50492	SPG	450492
50494	SPG	472164!
504946	C-R	472572!
504949	C-R	415284
504951	C-R	471532
504951	NAPCO	J1110=
50496	SPG	410496!
50496S	SPG	410496!
5049B	JN-MN	481864
504VB7	MARI	417546!
505000	AT IM	417349
505003	AT IM	352541
505005	C-R	330385!
505009	C-R	471538
505016	C-R	471192
505018	C-R	473231!
50502	SPG	474260
505020	C-R	8362
505022	C-R	470898!
505037	C-R	5499=
505040	C-R	6966S
505051	C-R	471538
505055	NAPCO	J1112
505073	C-R	473459
505089	C-R	331173
505125	C-R	472157
505143	C-R	331301N
50516	SPG	450516
505161	C-R	40059S
50519	SPG	471271!
50519S	SPG	471271!
5051B	JN-MN	415458!
50520	SPG	471272!
50520S	SPG	471272!
50521	CUMMI	472164!
50521	OLIVE	472185!
50521S	SPG	473423
50522	GEHL	472258!
50522	SPG	472258!
505227	C-R	340815
50522S	SPG	472258!
50523	SPG	450523
50524	OLIVE	473228
505248	C-R	342805
50525	NATL	471887
50527	SPG	474276!
50529	SPG	450984
50530	SPG	470530!
505302	C-R	240151
505308	C-R	40555
505308	C-R	40555S!
505310	C-R	415437
505317E	OLIVE	455820
50532	SPG	450532
505322E	OLIVE	455079!
50533	SPG	450533
50534	SPG	471255!
50535	SPG	450535
50535	SPG	471264!
505377	C-R	471413!
50539S	SPG	414268!
5053B	JN-MN	417511
50540	SPG	450540
505409	C-R	7338N
50541	SPG	471689!
505412	C-R	8059S
50543	SPG	474272
505434	C-R	340787
50545	SPG	450545
5054601	CALI	416666
5054621	CALI	455330!
50548	SPG	470625!
5054821	CALI	415295
50552	SPG	470565!
50552S	SPG	470565!
5055403	CALI	415960!
50557	SPG	450557
50557	SPG	471255!
50563	DANA	100696
50565S	TROS	418028
50567	SPG	471267!
50567S	SPG	471267!
505680	C-R	473448
505686	C-R	40301S
505687	C-R	473239
50569	TROS	472299
505700	C-R	473461!
505701	C-R	450307
505703	C-R	473474
505705	C-R	473238
505709	C-R	472636!
50571	SPG	412027
505714	C-R	40101S
505715	C-R	410694!
505716	C-R	450111
505720	C-R	470380!
505722	C-R	455321
505725	C-R	411376!
505729	C-R	6626S
505738	C-R	40301S
505741	C-R	472397!
505746	C-R	471554!
505750	C-R	471276
505751	C-R	471281!
505753	C-R	415254
5057LA	JN-MN	412473!
5058140	TAYLR	415447
50585	CLARK	240151
50588	GARLK	471643!
50588S	SPG	450588
505892C1	IH	416287
505892C1	IH	416288!
505906	C-R	417608
505910	C-R	471466!
505919	C-R	473237
50593	SPG	450593!
505930	C-R	331227H
505989	C-R	474278!
505989	C-R	6859S
505VB7	MARI	416107!
505VB7	MARI	455073
506	UNIVE	415938
50600	C-R	128X150X15!
506003-A	WHITE	370001A
50604S	SPG	450604
50605TA	TRSCM	415725!
50606	NATL	470606!
506061	C-R	7188S
506062	C-R	473473
5060658	EATON	417343=
5060658	Y-T	417343=

! Industrial Size/Type
= The U.S. customer service number is 877-4-TIMKEN. The Canadian customer service numbers are 800-565-4927 (English) and 800-565-0438 (French-Canadian).

Mfr. No.	Name	Zero Duplication or Recommended Industrial
506068	C-R	474260
5060D	GOODM	455480!
5060LA	JN-MN	450593!
50610H	IH	471820
5061100	CALI	415234!
5061101	CALI	415234!
506180	C-R	415991
50619	SPICE	472015!
506193	C-R	471413!
506194	C-R	471267!
506198	C-R	9376
5061LA	JN-MN	476838!
5062	C-R	471526!
506245	C-R	7188S
50625	SPG	470625!
506255	C-R	331107N
50625SA	TRSCM	416865
50625TA	TRSCM	416865!
50626S	SPG	413248
5062MG	GOODM	415035
5062MG	GOODM	415035!
506314	C-R	340413
506315	C-R	240414
50633	SPG	471276
50634S	SPG	472475
50635TA	TRSCM	417278
506379	C-R	472234
50639	SPG	450639
506391	C-R	7013S
50640	C-R	7376=
506438	C-R	474278!
506438	C-R	6859S
50644	GMC	416273!
50645	C-R	455290
50645	SPG	470645
506454	C-R	3095
506456	C-R	471526!
50645TA	TRSCM	417541
506486	C-R	472354!
50650	C-R	455290*
506508	C-R	417159
506517	C-R	416654
506524	C-R	416956
506532	C-R	417171!
506536	C-R	455356
506551	C-R	417490
506553	C-R	417172
506555	C-R	55141
506558	C-R	416919
506559	C-R	415991
506559	C-R	455146!
506560	C-R	417501
506562	C-R	6358
506564	C-R	320457
506565	C-R	455249!
506567	C-R	415437
506570	C-R	415379
506570	C-R	415379!
506576	C-R	415023
506577	C-R	455026
506578	C-R	415394
5066	C-R	471526!
50660	SPICE	4434V
506615	C-R	471652
506625	C-R	471733
506630	C-R	350364
506640	C-R	40576S
506654	C-R	480581
506663	C-R	43089S
506670	C-R	5113
506670	C-R	7721!
506684	C-R	453279!
50669	SPG	50199S!
50669	SPG	6863S!
506697C1	IH	710006
5067	C-R	471526!
50670	C-R	7378
506708	C-R	416404!
506723	C-R	476470=
506726	C-R	456105
506731	C-R	415899N
506731	C-R	416624
506733	C-R	455144
506742	C-R	417354!
506746	C-R	415437
506747	C-R	415437
506747	C-R	415437!
506754	C-R	455032!
506755	C-R	415025
506759	C-R	415027!
506759	C-R	415027
50675TA	TRSCM	417542
506778	C-R	340823
50678	GARLK	471267!
506789	C-R	455336
50679	NATL	470954!
506791	C-R	471103!
506797	C-R	240435
506798	C-R	240435
506799	C-R	474279N
5068	C-R	471526!
506800	C-R	472810!
506803	C-R	416865!
506806	C-R	417362!
506813	C-R	416229
506830	C-R	413469!
506832	C-R	410102
506837	C-R	416271!
506838	C-R	412861
506839	C-R	455536
506844	C-R	410825
506847	C-R	411253!
506849	C-R	410102
506851	C-R	5756
506852	C-R	5877
506855	C-R	473453
50686	SPG	410987!
50686	SPG	450686
506860	C-R	471141!
506863	C-R	472924!
506865	C-R	40370S
506867	C-R	40085S
50687	GARLK	471570!
506870	C-R	470530!
5068773	GMC	471686
506879	C-R	417492
50688	NATL	410737!
506881	C-R	472157!
506881	C-R	472157
506895	C-R	417497
5069	C-R	471526!
5069	SPG	5092
506904	C-R	413472
506911	C-R	472179
506927	C-R	481864
50693	SPG	450693
506944	C-R	8243
506945	C-R	205044
50695	SPG	473426
506957	C-R	416921!
506977	C-R	50560
506986	C-R	455249!
506989	CHRYS	471271!
506VB7	MARI	415645!
506VB7	MARI	455104
507001	C-R	471567!
507009E	MINNM	471570!
507048	C-R	476470
507052	C-R	415995!
507052	C-R	415995!*
5070888	EATON	415938
5070888	Y-T	415938
507108	C-R	320457
507114	C-R	472705!
507118	C-R	240119
507124	C-R	471532
507126	C-R	471466
507132	C-R	471530
507133	C-R	471530
507139	C-R	470004!
507140	C-R	470004!
507149	C-R	471264
50715	GARLK	471646!
50715	GMC	470530!
507156	C-R	471535!
507160	C-R	473405
507169	C-R	240023
507171	C-R	471255!
507173	C-R	471558
507174	C-R	471558
507182	C-R	481650
507183	C-R	481650
507184	C-R	471651
507185	C-R	471651
507186	C-R	471651
507188	C-R	40328
507193	C-R	470606!
507203	C-R	471747!
507206	C-R	203003
507209	C-R	204005
507211	C-R	471705!
507218	C-R	471689
507223	C-R	473203
507224	C-R	50462
507226	C-R	473426
507232	C-R	471733
507243	C-R	471692!
507249	C-R	471442!
507250	C-R	471442!
507251	C-R	471424!
507252	C-R	472439
507253	C-R	40071S
507254	C-R	472439
507257	C-R	50266
507260	C-R	472185!
507262	C-R	450068
507263	C-R	472319
507273	C-R	40360S!
507275	C-R	473459
507277	C-R	450911N!
507278	C-R	472572!
507282	C-R	40183S!
507283	C-R	472572!
507284	C-R	473452
507291	C-R	473241
507293	C-R	472492!
507297	C-R	473179!
507298	C-R	473179
507299	C-R	480281!
50730	GARLK	470590
507301	C-R	473237!
507309	C-R	471760
507310	C-R	471762!
507312	C-R	471763
507315	C-R	471764!
507316	C-R	471765
507322	C-R	473424!
507334	C-R	473212!
507336	C-R	450604
507339	C-R	473212!
507353	C-R	6489
507358	C-R	473454
507360	C-R	451845
507361	C-R	471760
507364	C-R	471808!
507365	C-R	472164!
507367	C-R	470565!
507368	C-R	472150
50737	SPG	410737!
507373	C-R	472016
50737S	SPG	410737!
507382	C-R	450621
507390	C-R	473464
507394	C-R	473462
507397	C-R	5836
507424	C-R	415138!
507431	C-R	472287!
507442	C-R	473427
507445	C-R	416476!
507455	C-R	7780
507478	C-R	472560N!
507482	C-R	450307
507493	C-R	5797
507505	C-R	470712!
507507	C-R	470682
507510A	HARWA	50X75X10
507548	C-R	415379
507550	C-R	417518
507551	C-R	474272*
507551	C-R	474272
507558	C-R	455249!
507564	C-R	473235
507576	C-R	417601
507579	C-R	417542
507586	C-R	50026
507588	C-R	417555!
5076	C-R	5076
5076	NATL	370008A
50760	TROS	1040=
507609	C-R	7537S
507615	C-R	473463
507618	C-R	416288!
50764	NATL	470764!
507644	C-R	415116
5076546	GMC	470954!
507669	C-R	415995!
507669	C-R	415995!*
507686	C-R	473238
507692	C-R	415116
507715	C-R	5113
507715	C-R	7721!
507718	C-R	415937!
507718	MAGNA	472164!
507738	C-R	471684!
50776	SPG	450776!
507771	C-R	415379
507771	C-R	415379!
507799	C-R	473441
5078	SPG	AR25
50782	SPG	471195!
507837	C-R	45525S
50786	SPG	470334!
5078897	GMC	470954
507895	C-R	200880=
507945	C-R	416738!
507945	C-R	450096
507986	C-R	473447
5079B	JN-MN	455022

! Industrial Size/Type * Minor Width Difference

= The U.S. customer service number is 877-4-TIMKEN. The Canadian customer service numbers are 800-565-4927 (English) and 800-565-0438 (French-Canadian).

Mfr. No.	Name	Zero Duplication or Recommended Industrial
507VB7	*MARI*	**415938**
508	*UNIVE*	**416107**!
508	*UNIVE*	455073
50800	*SPG*	**480889**
508023	*C-R*	6241S
50803	*SPG*	450803
50806S	*SPG*	**470806**
508075	*C-R*	**331107N**
50808	*SPG*	450808
5081	*FULLE*	**416921**!
508114	*C-R*	331228H
508116	*C-R*	**472258**!
508162	*C-R*	**470625**!
508180	*CLARK*	**472179**
50819	*SPG*	**450819**
5081B	*JN-MN*	**415023**
508212	*C-R*	**472409**
508223	*C-R*	**417606**
5082B	*JN-MN*	**455008***
508342	*C-R*	**473449**
50835610	*TROS*	370033A
50839D	*IH*	**473367**
50840010	*TROS*	**417356**!
50840010	*TROS*	455188
508432	*C-R*	9150S
508450	*C-R*	**417485**
5084SH	*JN-MN*	**471466***
5084SS	*JN-MN*	**471466**!
5085	*C-R*	**471526**!
508513	*C-R*	**415294**!
508513B	*HARWA*	50X85X10
508513C	*HARWA*	50X85X10
508520	*C-R*	**415041**
508533	*C-R*	**471539**!
508539	*C-R*	**471391**!
508561	*C-R*	**417196**!
508575	*C-R*	6759S
508584	*C-R*	**474253**
508587	*FWD*	**415449**!
50860	*TROS*	**471571**
50861	*TROS*	1037
508613	*C-R*	**472179**
508615	*C-R*	**472164**!
50862	*OLIVE*	**472924**!
50865	*AM WH*	**471766**!
508650	*MICH*	**415645**!
508650	*MICH*	455104
508650	*UNIVE*	**415645**!
508650	*UNIVE*	455104
508657	*C-R*	**472258**!
50867S	*SPG*	**470898**
50868	*SPG*	**473203**
50869	*SPG*	450869
5086LA	*JN-MN*	**412871**!
508704	*C-R*	**471827**!
508709	*C-R*	**417484**!
508761	*C-R*	**471192**
50878	*HYST*	**473238**
508793	*C-R*	**417355**!
508793	*C-R*	485497
508798	*C-R*	**472164**!
508806	*C-R*	**415995**!
508807	*C-R*	**472439**
508812	*C-R*	**472409**!
508824	*C-R*	**470712**!
508831	*ALLCH*	**471785**!
50883271	*IG-RA*	**415725**!
508835	*C-R*	**471272**!
508856	*C-R*	**473010**!
508884	*C-R*	**471766**
508886	*C-R*	**471138**!
508894	*C-R*	50883=
5089	*C-R*	**471526**!*
5089	*NATL*	**417506**
5089	*WOODB*	**471762**!
508944	*C-R*	**472016**
508946	*C-R*	42763
508979	*C-R*	8610
508982	*C-R*	6638S
5089821	*EATON*	331228H
5089OSR	*JN-MN*	**455406**!*
508VB7	*MARI*	**417556**
5090	*C-R*	**471526**!*
50900111	*ONAN*	**473227**=
50900112	*ONAN*	**472572**=
5090012	*ONAN*	**450188**
5090016	*ONAN*	**472287**!
5090045	*ONAN*	**471766**!
5090046	*ONAN*	**471442**!
5090058	*ONAN*	450269
5090059	*ONAN*	**471554**!
509006	*C-R*	**470334**!
509006	*C-R*	50289
5090064	*ONAN*	**470605**=
5090086	*ONAN*	**472572**=
5090087	*ONAN*	**473227**=
5090097	*ONAN*	**472258**
5090098	*ONAN*	**473197**
509010A	*HARWA*	50X90X10
5090138	*ONAN*	**472179**
5090139	*ONAN*	**417474**
5090300	*CALI*	**415991**
5090300	*CALI*	455146!
509035	*C-R*	**472070**
509046	*C-R*	**417495**
509053	*C-R*	**418028**
509083	*C-R*	7014S
50910	*ONAN*	**472560N**!
50911N	*SPG*	**450911N**!
509120	*C-R*	**473211**!
5091S	*SPG*	**473231**
509134	*C-R*	8139
509144	*C-R*	**471264**!
509154C91	*IH*	370057A
509164	*C-R*	**417600**
509166	*C-R*	**450084**!
50917	*ONAN*	**470605**!
509172	*C-R*	**416282**
509174	*C-R*	**415960**
509178	*C-R*	**472394**
509179	*C-R*	**417079**
50919	*ONAN*	**471272**!
5091933	*O-M*	**471224**!
5091933	*SCOT*	**471224**!
5092	*NATL*	3698
509203	*C-R*	**416888**!
509217	*C-R*	**473229**!
509235	*C-R*	**472144**!
5092400	*CALI*	**415219**
5092401	*CALI*	**415219**
5092502	*CALI*	**416154**!
509261	*C-R*	**471272**!
509271	*C-R*	**417488**!
509277	*C-R*	**472082**
50929	*SPG*	**473237**!
5092LA	*JN-MN*	**471763**
5093	*SPG*	32X45X7
5093109	*SCOT*	**471255**!
50934	*ONAN*	**471442**!
5093400	*CALI*	**415036**
5093403	*CALI*	**416892**!
5093407	*CALI*	7354N
509348	*C-R*	8133S
509367	*C-R*	**473231**!
509389	*C-R*	8293S
509406	*C-R*	**473228**!
509407	*C-R*	**473367**
509408	*C-R*	**473245**!
509410	*C-R*	**472397**!
509411	*C-R*	**472636**!
509414	*C-R*	**417316**!
509415	*C-R*	**415995**!
509416	*C-R*	**476470**
509416	*C-R*	**476470**!
509417	*C-R*	**415991**
509417	*C-R*	**415991**!
509418	*C-R*	**415035**
509420	*C-R*	**416865**!
509445	*C-R*	**472492**!
509449	*C-R*	**415437**
50945	*ONAN*	**471766**!
50946	*ONAN*	**471442**!
509465	*C-R*	**415449**!
5095	*C-R*	**471526**!*
50950	*ONAN*	**470954**
509505	*C-R*	7186S
509516	*C-R*	**412119**!
509526	*C-R*	**417316**
509529	*C-R*	**471744**!
509546	*C-R*	**416292**=
509550	*C-R*	**416557**
509554	*C-R*	**415449**!
509556	*C-R*	**415458**!
50957	*ONAN*	**471766**!
509578	*CATER*	**473245**!
50958	*ONAN*	450269
509580	*C-R*	**415263**
509584	*C-R*	55532=
50959	*ONAN*	**471554**!
50960	*ONAN*	**470954**
509621	*C-R*	**473475**
509623	*C-R*	**415379**
509636	*C-R*	**415857**!
509648	*ALLCH*	**471801**!
50965	*HYST*	**472157**!
50965	*HYST*	**472157**
509656	*C-R*	**415045**!
509669	*C-R*	6644
509699	*C-R*	**415035**
509719	*C-R*	**473367**!
509721	*C-R*	**415960**
509722	*C-R*	**416339**
509722	*C-R*	455031!
509723	*C-R*	**415027**
509723	*C-R*	**415027**!
509735	*C-R*	7044NA
509737	*C-R*	**451857**
509738	*C-R*	55028
5098	*ONAN*	**330385**
509815	*C-R*	**470898***
509816	*C-R*	**415035***
509816	*C-R*	**415035**
509830	*C-R*	**471271**!
509839	*C-R*	**472636**!
509847	*C-R*	**473228**
50987	*SPG*	**410987**!
509874	*C-R*	**472397**!
50988	*SPG*	**473474**
509886	*C-R*	**473231**!
50988S	*SPG*	**473474**
509895	*C-R*	**416664**!
50991S	*SPG*	**480630**!
50992	*ONAN*	**471466**!
509927	*C-R*	**415379**
50992R11	*IH*	6532S=
509940	*C-R*	**473459**
509949	*C-R*	**473016**!
509972	*C-R*	**415449**!
509975	*C-R*	**471466**!
509998	*C-R*	**416888**!
509999	*C-R*	6815
509A1	*ONAN*	**473231**!
509A11	*ONAN*	**471765**!
509A12S	*ONAN*	**450188**
509A2	*ONAN*	**471224**!
509A40	*ONAN*	**471765**=
509A41	*ONAN*	**473231**!
509A48	*ONAN*	**470605**!
509A59	*ONAN*	**471554**!
509A64	*ONAN*	**470605**!
509A86	*ONAN*	**472572**=
509A87	*ONAN*	**473227**=
509A97	*ONAN*	**472258**
509A98	*ONAN*	**473197**
509B1	*ONAN*	**473231**!
509B11	*ONAN*	**471765**!
509B12	*ONAN*	**450188**
509B16	*ONAN*	**472287**!
509B40	*ONAN*	**471765**=
509B41	*ONAN*	**473231**
509B41-11	*ONAN*	**473231**=
509B86	*ONAN*	**472572**=
509B87	*ONAN*	**473227**!
509P44	*ONAN*	**471442**!
509P46	*ONAN*	**471442**!
509P49	*ONAN*	**473225**!
509P50	*ONAN*	**415303**!
509P64	*ONAN*	**470605**!
509VB7	*MARI*	**416666**
50A2402	*MINNM*	**472179**
50A2403	*MINNM*	**473227**
50X62X7SC	*TRSCM*	50X62X7!
50X62X7TC	*TRSCM*	50X62X7!
50X65X8	*NATL*	1209
50X65X8SC	*TRSCM*	50X65X8!
50X65X8TC	*TRSCM*	50X65X8!
50X68X8	*NATL*	1948
50X68X8SB	*TRSCM*	225020
50X68X8SC	*TRSCM*	50X68X8!
50X68X8TC	*TRSCM*	50X68X8!
50X70X7TA	*TRSCM*	413818
50X70X8SC	*TRSCM*	50X70X8!
50X70X8TC	*TRSCM*	50X70X8!
50X70X9SC	*TRSCM*	50X70X9
50X70X9TC	*TRSCM*	50X70X9
50X72X8SC	*TRSCM*	50X72X8
50X72X8TC	*TRSCM*	50X72X8
50X75X10	*SIMRT*	50X75X10
50X75X12SC	*TRSCM*	50X75X12
50X75X12TC	*TRSCM*	50X75X12
50X80X8SC	*TRSCM*	50X80X8
50X80X8TC	*TRSCM*	50X80X8
50X85X10	*SIMRT*	50X85X10
50X85X8SC	*TRSCM*	50X85X8
50X85X8TC	*TRSCM*	50X85X8
50X90X10	*FORSH*	50X90X10
50X90X10	*SIMRT*	50X90X10
50X90X10SC	*TRSCM*	50X90X10
50X90X10TC	*TRSCM*	50X90X10
50X90X8ASN	*ISP*	50X90X8
51	*UNIVE*	**471535**!
51-015-100-183	*MAN*	712107
51-015-100-184	*MAN*	712106
510	*UNIVE*	**417556**
5100	*NATL*	370046A
51004	*GARLK*	**471224**!
5100408	*GMC*	204017
5100650	*GMC*	**473214**

! Industrial Size/Type * Minor Width Difference

= The U.S. customer service number is 877-4-TIMKEN. The Canadian customer service numbers are 800-565-4927 (English) and 800-565-0438 (French-Canadian).

Mfr. No.	Name	Zero Duplication or Recommended Industrial
51007	SPG	474256
510116	C-R	471554!
510119	C-R	470898
510120	C-R	415458!
510132	C-R	473227!
510133	C-R	472572!
51014	SPG	471567!
51015	NATL	471015!
510160	LAU	240735
510165	C-R	350936
510168	C-R	472394
510172	C-R	417349!
51018	SPG	470898
510185	C-R	471526!
51019	SPG	472185!
510192	C-R	470954!
510193	C-R	472439
51020	GARLK	471649!
510205	C-R	471413!
510206	C-R	416239!
510207	C-R	471652
510208	C-R	416888!
510210	C-R	415072
510228	C-R	471570!
510229	C-R	471267!
51024	SPG	471653!
510247	VICK	481163!
510248	C-R	412119!
510251	C-R	415138!
510260	C-R	471466!
5102643	GMC	483602=
510265	C-R	472015!
510266	C-R	470380!
51028	GARLK	471689!
510281	C-R	1049
51030	TROS	471267!
510322	C-R	55646=
510339	C-R	472164!
51035	THEW	450335
510361	C-R	472572!
510365	C-R	472015!
510371	C-R	471271!
510383	C-R	471689!
510391M1	MASSE	472560N!
5103951	GMC	483602=
5103LA	JN-MN	417484!
51040	GARLK	471733
510401	C-R	416271!
510408	C-R	455536
510412	C-R	417316!
510413	C-R	472636!
510415	C-R	203006!
510432	C-R	410737!
510444	C-R	473450
510445	C-R	472070
510475	C-R	471766!
510478	C-R	471264!
510480	C-R	417355!
510480	C-R	485497
510481	C-R	2081
510482	C-R	416130!
510492	C-R	473424!
5104LA	JN-MN	415995!
5104LPD	JN-MN	415995!
5104LPD	JN-MN	415995!
510515	WHITE	370003A
510537	C-R	415090
510538	C-R	473213!
510539	C-R	473421
510540	C-R	473463
510541	C-R	473242
510542	C-R	473462
510543	C-R	471391!
510546	C-R	471984
510547	C-R	473313
510548	C-R	470088
510549	C-R	474281!
510550	C-R	473440!
510551	C-R	473458!
510552	C-R	471868
510554	C-R	472287!
510555	C-R	470950!
510555	C-R	6241S
510556	C-R	471619!
510558	C-R	412027
510560	C-R	455356
510561	C-R	417486
510562	C-R	417159
510563	C-R	412040
510564	C-R	411500
510565	C-R	413478
510569	C-R	471821!
510570	C-R	473442!
510571	C-R	450273
510572	C-R	473441
510575	C-R	473466
510589-C93	IH	HU149A
510602	C-R	471821!
510611	C-R	474264
5106223	GMC	480581=
510624	MAGNA	470954!
510627	C-R	470530
510645	C-R	40568S
510647	C-R	471141
510663	C-R	470712
510674	C-R	471686
510676	C-R	450456!
510677	C-R	450808
510678	C-R	471730
510678	MAGNA	471801!
510679	C-R	474254*
510679	C-R	474254
510680	C-R	450054
510681	C-R	473414
510683	C-R	50209
510685	C-R	350156
510685	C-R	473096
510686	C-R	471472!
510687	C-R	471344
510688	C-R	471820
510689	C-R	473214
510690	C-R	473205
510691	C-R	471354!
510696	C-R	473016!
510697	C-R	473225!
510698	C-R	474264
510700	C-R	473415
510701	C-R	476838!
510729	C-R	470954
510731	C-R	416738!
510735	C-R	51322
510738	C-R	472924!
51073SA	SPG	481073
510740	C-R	471750!
510741	C-R	471224!
510751	C-R	332062
510753	C-R	9150S
510756	C-R	472311!
510768	C-R	471689!
51076SA	SPG	471076
510776	C-R	100495
510776	C-R	417349
510777	C-R	471267!
510787	C-R	473227
51078S	SPG	451078!
5107OSR	JN-MN	417362!*
5108219	GMC	205017
510826	C-R	40316S
51082S	SPG	451082
510834	C-R	472924!
5108369A	GMC	205035
51086V	IH	50075=
51086VX	IH	481864
5108OSR	JN-MN	416888!
5109	C-R	471472!
510905	C-R	471504
510914	C-R	415991
510932	C-R	471442!
510985	C-R	471192
510988	C-R	472185!
5110	C-R	471472!
5110	NATL	370124A
5110	SPG	370124A
51100	SPG	471652
51100	SPG	482208!
511002	C-R	471735
511003	C-R	450044
511005	C-R	471747!
511006	C-R	450313
511008	C-R	473232
511009	C-R	472012
51101	TROS	6785
511010	C-R	450311
511011	C-R	473464
511011	C-R	473464!
511012	C-R	473239
511013	C-R	473179
511014	C-R	482253
511016	C-R	50191
511019	C-R	5877
511023	MAGNA	473214!
511029	C-R	416444
511030	C-R	472409!
511031	C-R	413469!
511032	C-R	412920!
511035	C-R	415350
511035	WOOL	415295
511036	C-R	470354
511042	C-R	450104
511043	C-R	411245!
511044	C-R	417073
511052	C-R	412871!
511054	C-R	455079!
511056	C-R	455280
511057	C-R	417158!
511058	C-R	416654!
511059	C-R	415995!
511059	C-R	415995!*
511060	C-R	475384
511061	C-R	415088!
511061	C-R	415088
511064	C-R	455020
511065	C-R	480491
511066	C-R	415984!
511067	C-R	416706!
511071	C-R	415303!
511072	C-R	472924
511073	ALLCH	471192
511073	C-R	455022
511074	C-R	456105
511076	C-R	471192
511080	C-R	473435
511081	C-R	473419
5110874	GMC	415284
511090	C-R	417191
511090	C-R	455165!
511092	C-R	417494
511094	C-R	415437
511094	C-R	415437!
511095	C-R	455026
511096	C-R	417181!
511097	C-R	415035
511099	C-R	415437
511100	C-R	417211!
511101	C-R	481443!
511102	C-R	470606!
511103	C-R	473420
5111035	WOOL	40401
511104	C-R	412473!
511106	C-R	415559
511114	C-R	450065
511122	C-R	417223
511123	C-R	473445
511124	C-R	473234
511125	C-R	473235!
511126	C-R	474265
511127	C-R	450765!
511128	C-R	473236!
511129	C-R	473446
51113	GARLK	471652
511130	C-R	470086
511132	C-R	415196!
511133	C-R	415284
511134	C-R	415379!
511134	C-R	415379
511135	C-R	417513
511136	C-R	471763
511137	C-R	417598
511138	C-R	415867
511139	C-R	416077
511141	C-R	417298
511143	C-R	417601
511144	C-R	417603!
511145	C-R	417563
511148	C-R	417267
511149	C-R	416158
51115	CLARK	473228
511151	C-R	415196!
511153	C-R	455584
511154	C-R	455330!
511155	C-R	416865!
511158	C-R	415072
511161	C-R	415219
511162	C-R	415076
511163	C-R	415077
511164	C-R	415482
511165	C-R	55228=
511166	C-R	417570
511167	C-R	415128
511168	C-R	416239!
511169	C-R	455129
51117	GARLK	471692!
511170	C-R	55222=
511171	C-R	415871
511172	C-R	203003
511173	C-R	417604
51117N	SPG	451117N=
511181	C-R	415043
511182	C-R	417512
511183	C-R	415138!
5111883	GMC	53809S
511210	C-R	471141!
511211	C-R	471504!
511212	C-R	450143
511213	C-R	412871!
511215	C-R	417498
511230	C-R	410496!
51125	C-R	130X160X12

! Industrial Size/Type * Minor Width Difference

= The U.S. customer service number is 877-4-TIMKEN. The Canadian customer service numbers are 800-565-4927 (English) and 800-565-0438 (French-Canadian).

Mfr. No.	Name	Zero Duplication or Recommended Industrial
51126	C-R	130X160X12V
51128	GARLK	**470712**!
5112808	EATON	**472439**
511289	C-R	204020
511289	C-R	204505!
511297	CLARK	**415025**=
51130	C-R	130X160X12!
511306	C-R	**473010**!
511307	C-R	**415449**!
511311	C-R	**416229**
511314	C-R	**417343**!
511327	C-R	7934S
511344	C-R	205015
51135	C-R	130X160X12!*
511377	C-R	**472843**
51138	GARLK	**471763**
51139	CLARK	**471766**!
5114	NATL	2146
51140	C-R	130X170X12
511401	C-R	**481792**
51143	C-R	130X170X15!
51143	CLARK	**471765**!
5114335	GMC	**415284**
51143S	SPG	**451143**
511448	C-R	5126
51147H	SPG	**472164**
5114802	GMC	455956H
511493	CLARK	**410825**=
51150	CLARK	**472636**!
511523	C-R	**417514**
51153	SPG	**410825**
511537	C-R	7537S
511542	Y-T	415064
5115454	GMC	**417344**
511622	C-R	**412473**!
5116224	GMC	**473454**
5116229	DETRO	BS40502
5116229	GMC	**415035**
511624	C-R	**416332**!
51162N	SPG	**473454**
511635	C-R	**471554**!
5116476	GMC	**480581**=
511687	IH	**470954**!
511694R91	IH	450044
511714	CLARK	**416271**=
511716	ALLCH	**471413**!
51172V	IH	470059
51172V	IH	**470380**!
5117401	WHITE	415185H=
511741	C-R	**471765**!
511752	C-R	**473442**!
511753	C-R	**472018**
51176	CLARK	**472185**!
511775	C-R	**470954**!
5117983	GMC	**470954**!
5118	SPG	5095
51180	C-R	130X170X15
51180	SPG	471707N
511809	C-R	**471649**!
51181	C-R	130X150X15
51182	C-R	130X150X10!
51182	C-R	710380
51182	SPG	**451182**
511827	C-R	8477S
511839	C-R	**415960**
511839	C-R	**415960**!
51185	C-R	130X170X12V
511864	C-R	**472409**!
511867	C-R	**472354**!
511871	C-R	8460N
511878	ALLCH	**472070**
511895	C-R	**472144**!
5118SS	JN-MN	**254287***
511922M91	MASSE	5550=
51195SA	SPG	**471195**!
511974	C-R	415137!
511974	C-R	**418028**
511D5	DIA	**416654**
511D5	WHITE	**416654**
511D6	WHITE	5405
511H	BRAD	**472439**
511VB7	MARI	**417542**
512	UNIVE	**416666**
51201	TRANS	3543
51201	TROS	5453
512024	C-R	**481073**
512038	C-R	**480630**
512060	C-R	**415991**
512060	C-R	**415991**!
512112	DISOG	710042
512159	C-R	**415371**
5121601	CALI	**415577**
512162	C-R	**415995**!
51220	CLARK	417267
512215	C-R	**415991**
512215	C-R	455146!
512224	C-R	**471272**!
51224	GARLK	**471413**!
512277	C-R	**473238**!
51228D	IH	**415371**
512297	C-R	8429S
512301	C-R	**473367**
512304	C-R	**471224**!
512316	C-R	**417495**
51232	GARLK	**471737**
512322	C-R	55646*=
512328	C-R	**415697**!
512328	C-R	455547
512345	C-R	203012
512346	C-R	203016
512348	C-R	203025
512349	C-R	203029
51235	CLARK	240119
5123500	CALI	50631
5123501	CALI	**412943**
512366	C-R	**470774**!
5123802	CALI	416008
51240	C-R	**416557**
512415	C-R	**417343**!
5124200	CALI	**417604**
512427	C-R	**412119**!
51244	C-R	**417511**
51245	C-R	**417258**
512452	C-R	**471766**!
51246	GARLK	**471766**!
512468	C-R	**417316**!
51247	C-R	**416557**
51247	IRON	5759=
51248	C-R	**417546**!
512487	C-R	5589
512495	C-R	**471442**!
5125	C-R	**471472**!
5125	NATL	4148
51250	C-R	**417546**!
512503	C-R	6590S
51251	C-R	**417546**!
512516	C-R	**472311**!
51252	C-R	**417258**
51253	C-R	**417258**=
51254	CLARK	**471192**
512550	C-R	416102
512562	C-R	**484058**
512586	C-R	200642
5126	C-R	**471472**!
51262	GARLK	**471795**
51262	TROS	**471787**
512630	C-R	**476470**
512655	C-R	100495
512655	C-R	**417349**
512657C1	IH	**416158**
512657C1	NAVST	386025A
51265S	SPG	**412725**
512662	UNIVE	**415938**
512663	MICH	**415938**
51270	C-R	**417546**!
5127119	GMC	**471689**!
5127119A	GMC	**471689**!
5127238	EATON	**410308**!
512723800	EATON	**410308**!
512726	VICK	44052
51275	C-R	417547
51276	C-R	417547
5127821	CUMMI	**415284**
5128	NATL	710077
512806	C-R	**417602**!
512810	C-R	9015S
51282	WAYNE	**415263**
512830	GERL	**472924**!
512839	ALLCH	**473211**!
512840	ALLCH	**473214**!
512886R91	IH	45013S
512887R91	IH	40101S
5128B	JN-MN	**473462**
5128LPD	JN-MN	**473462**
5129	NATL	5108
512904	C-R	417548
512920	C-R	6906S
512937	C-R	42101S
512938	C-R	**417344**!
512946	C-R	8996S=
512976	C-R	**473473**
512989	C-R	**417254**
512993	C-R	41075S
5129B	JN-MN	**471192**
5130	NATL	**415937**
513071	C-R	**417247**!
513073	C-R	40576S
513090	C-R	353132
513096	C-R	450655=
513097	C-R	**472924**!
513106	C-R	**416664**!
513108	C-R	40769S
5131329	GMC	**470625**!
51314	CLARK	**473446**
513159	C-R	**471652**
513160	C-R	**476838**!
513162	C-R	**472082**
5131698	GMC	**416271**!
51319	CLARK	**416271**!
513195	C-R	**416921**!
513211	C-R	**471231**!
513245	C-R	**473215**!
513280	C-R	**471267**!
51329	TROS	**415876**
513290	C-R	41257!
5132909	GMC	**471649**!
5132SS	JN-MN	481650
5133	C-R	**471472**!
5133000	CALI	**455005**
513320	MAGNA	**471442**!
513341	C-R	417543
513368	C-R	**416149**
5133852	GMC	**415284**
5134	C-R	**471472**!
5134336	GMC	**482253**=
5134351	GMC	**471652**
5134442	C-R	**417602**!
513456	C-R	**473228**
513470	C-R	**415995**!
513472	C-R	6575S
51348	GARLK	**472258**!
5134924	GMC	482069N
513513	C-R	**473211**
513557	C-R	**471646**!
51356	CLARK	240319
51357	CLARK	**471141**!
5135820	GMC	1041
513592	C-R	**450593**!
5135SS	JN-MN	**471472**!
51360	GARLK	**471192**
513600	C-R	**473237**!
51364	CLARK	**470712**!
513656	C-R	**476470**!
513656	C-R	**476470**
513677	C-R	353135
513677	C-R	**474278**!
51368	GARLK	**473214**!
513702	JNSON	**482309**
51375	CLARK	**472560N**
513754	C-R	**416865**!
513756	C-R	**417158**!
513759	C-R	55353
51376	WAUKE	**472185**!
513764	C-R	**417020**
513765	C-R	55224=
513767	C-R	**415124**
51377	CLARK	**472636**!
513773	C-R	**417549**!
513775	C-R	**417554**!
513776	C-R	**415072**
513778	C-R	417526
513779	C-R	**476470**
51378	GARLK	**473215**!
5137SH	JN-MN	**350364**
513802	C-R	6356
513804	C-R	5070
513805	C-R	**416271**!
51382	CLARK	**471554**!
51383	CLARK	**471765**!
51384	CLARK	**473205**
51384SA	SPG	**480581**
51385	CLARK	**471766**!
51386	CLARK	470059
51386	CLARK	**470380**!
51387	CLARK	**473446**
513870	C-R	**472157**
513870	C-R	**472157**!
5138710	GMC	483054N
5138796	GMC	**470898**=
51388	CLARK	**416271**!
51389	CLARK	**471141**!
5138SS	JN-MN	**471558***
5139	C-R	**471472**=
513915	VICK	**455858**
5139189	GMC	JX1505=
51392	CLARK	**473228**
5139484	GMC	**417365**=
5139505	GMC	**472164**!
5139585	GMC	**416229**=
51397	CLARK	**473214**!
513984	C-R	**471271**!
514	UNIVE	**416476**!
5140	C-R	**471472**!
51403	TROS	6818
5140SS	JN-MN	456744N
5141	C-R	**471472**!
5141050	GMC	**418028**

! Industrial Size/Type * Minor Width Difference

= The U.S. customer service number is 877-4-TIMKEN. The Canadian customer service numbers are 800-565-4927 (English) and 800-565-0438 (French-Canadian).

Mfr. No.	Name	Zero Duplication or Recommended Industrial
5141050	GMC	455137!
51412	CLARK	**472015!**
51413SA	SPG	**471413!**
514151	C-R	**470954!**
514159	C-R	**473228!**
514170	C-R	**416339**
514251	C-R	**472164**
5142678	GMC	**415327=**
5142R	JN-MN	**415034!**
514300	C-R	340835
5143108	GMC	**417344=**
514321	C-R	8168=
514322	C-R	**451182**
514323	C-R	**484054**
51435	NATL	**484054**
51435	WMG	**484054**
5143R	JN-MN	**417273**
514412	C-R	5578
51443SA	SPG	**481443!**
51446	MASTE	**473427**
51448	MASTE	**471567!**
514481	C-R	**415991**
514481	C-R	455146!
51449	MASTE	**473215!**
5144LUP	JN-MN	**412028**
514518	C-R	**415483**
514523	C-R	**415960**
51454	GARLK	**473227!**
51455	CLARK	**472636!**
514551	C-R	8594S
514580	C-R	321460
5145LA	JN-MN	450311
5145LUP	JN-MN	450311
51460	CLARK	**473238**
514612	C-R	8660S
51462	GARLK	**470625!**
514645	C-R	**471567!**
51466	MASTE	**473427**
514670	C-R	**473459**
514680	ALLCH	**472924!**
514693	GMC	**417967!**
514697	C-R	**473237!**
51472	GARLK	**470380!**
514728	C-R	**417487!**
514728	C-R	**417487**
5147LA	JN-MN	**417596**
514810	C-R	**470954!**
51482	MASSE	**474265**
51482	MASTE	**474265**
5148314	GMC	**473454**
514860	C-R	9568
514898	C-R	5711
5148LA	JN-MN	455290*
5148LPD	JN-MN	455290
51492	GARLK	**473228!**
51492D	IH	**473421**
51492DA	IH	**473421**
51492L	IH	**473421**
51494DA	IH	**472924**
514953	C-R	**416154!**
514955	C-R	**416666**
514963	GMC	**417967!**
51498	GARLK	**473228!**
514989	C-R	**472409!**
5149LA	JN-MN	**471466!**
515	C-R	5MR71
5150	C-R	**471549**
5150	C-R	**471549***
51501S	TROS	**415449!**
5150220	GMC	483054N
51503S	TROS	**473234**
515071	C-R	8597S
5150790	GMC	**471765!**
5150791	GMC	**471647**
5150846	GMC	**415284**
5150863	GMC	**472924!**
515098	C-R	**471649!**
5150SS	JN-MN	**472311!**
5151090	GMC	**417485**
5151392	GMC	**417344!**
5151SH	JN-MN	**481537***
5151SS	JN-MN	**481537**
515231	C-R	**472354!**
51524	CLARK	**472810!**
515242	C-R	**471643!**
515282	C-R	410059
515282	C-R	**470380!**
515283	C-R	**472299**
5152LA	JN-MN	**471466!**
5152LUP	JN-MN	**471466!**
5153	C-R	**471549!**
515308	C-R	**350936**
515328	C-R	**415458!**
5153373	GMC	**417344!**
515355	C-R	**471354!**
5153560	GMC	**415284**
515378	C-R	8804S=
5153SH	JN-MN	40169S*
5153SS	JN-MN	**473214!**
5154	C-R	**471549!**
515400	C-R	**415991=**
515410	C-R	8695S
5154224	GMC	**471076**
5154314	GMC	**416271!**
5154315	ALLCH	**416271!**
5154315	GMC	**416271!**
515440	ALLCH	**474278!**
51546	CLARK	**472258**
5154791	GMC	**415284**
51548	CLARK	**472258**
5154LA	JN-MN	**473214**
5155226	GMC	**472572!**
51553	AM WH	**417316!**
5155300	CALI	**416107!**
5155300	CALI	455073
5155445	GMC	470059
5155445	GMC	**470380!**
5155462	GMC	**470625!**
5155621	GMC	**471224!**
5155786	GMC	**455144**
51558	CLARK	470059
51558	CLARK	**470380!**
515589	C-R	200371
51558R2	IH	6532S=
5156309	GMC	**450593!**
515641	C-R	**471271!**
515644	C-R	**417621!**
51566	GARLK	**473230!**
515666	C-R	8705S
515667	C-R	**415995***
515667	C-R	**415995!**
515672	C-R	**415035**
515713	C-R	**472636!**
5157518	GMC	**415284**
5157536	GMC	**473467**
5157574	GMC	**417134**
51576	GARLK	**473231!**
5157948	GMC	**471646!**
5158063	GMC	**472924!**
51583S	SPG	**451583!**
5158446	GMC	**471787!**
515847	C-R	**472185=**
51585	CLARK	**472560N**
515878	C-R	**473426**
515886	C-R	**415995!**
515886	C-R	**415995***
515887	C-R	**415001=**
51590	GARLK	**473010!**
515920	C-R	**415072**
515933	C-R	**471272!**
515956	C-R	**471231!**
51598	GARLK	**473232!**
515991	C-R	**450593!**
516015	C-R	**473225!**
516019	C-R	**472287!**
516025	C-R	8940S
516073	C-R	**471138!**
516080	C-R	1097N
5161028	GMC	**471570!**
51611176-002	ALLCH	**471705!**
51611176-004	ALLCH	**473016!**
51611176-005	ALLCH	**472185!**
51611176-007	ALLCH	**472475**
51611176-008	ALLCH	**417349**
51611176-009	ALLCH	**471647**
51611176-010	ALLCH	**415991**
51611176-010	ALLCH	455146!
51611176-011	ALLCH	**415082**
51611176-012	ALLCH	**411394!**
51611176-013	ALLCH	**473243**
51611176-05-002	ALLCH	**471705!**
51611176-05-003	ALLCH	**471766!**
51611176-05-004	ALLCH	**473016!**
51611176-05-005	ALLCH	**472185!**
51611176-05-011	ALLCH	**415082**
51611176-05-012	ALLCH	**411394!**
51611176-05-013	ALLCH	**473243**
51611176-06-002	ALLCH	**471705!**
51611176-06-003	ALLCH	**471766!**
51611176-06-004	ALLCH	**473016!**
51611176001	ALLCH	**471646!**
51611176006	ALLCH	**471795**
516111605001	ALLCH	**471646!**
516169	C-R	**470565!**
516222	C-R	9569S
51625TA	TRSCM	**417258**
516285	C-R	**415035**
516285	C-R	**415035!**
516291	C-R	291099
5163	C-R	**471549!**
516302C1	IH	456618
51632408	TROS	416327
516325	C-R	**415072**
516339	C-R	**410496!**
51633D	IH	**415991**
51633D	IH	455146!
51635607.5	TROS	**417366!**
516361	C-R	8974S
516393	GERL	**416892!**
5164	C-R	**471549!**
51640010	TROS	**417357**
51640010	TROS	455192!
51640808	TROS	**415142**
51641208	TROS	**455194**
5164157	GMC	**416921!**
51641607.5	TROS	**472157!**
51641607.5	TROS	**472157**
51641608	TROS	**472157!**
51641608	TROS	**472157**
516445	C-R	**416865!**
5164463	GMC	**412473**
5164468	GMC	**417191**
5164468	GMC	456585
5164474	GMC	**471766!**
516453	C-R	**416239!**
51645TA	TRSCM	417547
5164SS	JN-MN	**471833***
5165357	GMC	**415284**
5165359	GMC	**415284**
516553	C-R	6612S
516563	C-R	**415483**
516564	C-R	**472015!**
51657301-001	ALLCH	**415458!**
51657301-001-003	ALLCH	**415458!**
51657301-002	ALLCH	**416345!**
51657301-002	ALLCH	455033
51657301-003	ALLCH	**455134!**
51657301-004	ALLCH	**412871!**
51657301-005	ALLCH	**416288!**
51657301-008	ALLCH	**451948**
51657301-009	ALLCH	**471764!**
51657301-010	ALLCH	**472144!**
51657301-011	ALLCH	**415035**
51657301-011	ALLCH	**415035!**
51657301-013	ALLCH	**415725!**
51657301-016	ALLCH	**415991**
51657301-016	ALLCH	455146!
51657301-019	ALLCH	**417344!**
51657301-020	ALLCH	**472258!**
51657301-03-009	ALLCH	**471764!**
5165730100100	ALLCH	**415458!**
516578	C-R	**473317**
516958	EUCLD	**471442!**
516958	GMC	**471442!**
5166003	GMC	**415449!**
516607	C-R	**470625!**
516618	C-R	**472492!**
5166226	GMC	**415284**
516624	C-R	**415449!**
516626	C-R	**410694!**
51662S	SPG	**471649!**
516642	C-R	**416654!**
516650	GERL	**473463**
516675	MICH	**416107!**
516675	MICH	455073
516675	UNIVE	**416107!**
516675	UNIVE	455073
5166SH	JN-MN	**470954!**
5166SS	JN-MN	**470954!**
516795	C-R	**415458!**
516805	WAUKE	415198H=
516811	C-R	5406
516839	C-R	370005A
516851	C-R	**416239!**
5168647	GMC	**416125!**
516880	C-R	**473234!**
51690	GARLK	**473237!**
516952	C-R	**471567!**
516963	C-R	7442H
5170	C-R	**471549!**
517013	C-R	8430S
51704	GARLK	**472164!**
517064	ALLCH	**471224!**
517077	C-R	**415379**
5170LA	JN-MN	**415991**
5170LA	JN-MN	455146!
51714	GARLK	**472185!**
517147	C-R	**417210!**
51718	HYST	**455189**
5172000	GMC	**415284**
517201	C-R	**415458**
517202	C-R	8975S
5172164	GMC	**474253**
517225	C-R	7994S
517232	C-R	6808N
51726	GARLK	**472179**
517262	C-R	**416892!**
517273	C-R	**415138!**

! Industrial Size/Type * Minor Width Difference

= The U.S. customer service number is 877-4-TIMKEN. The Canadian customer service numbers are 800-565-4927 (English) and 800-565-0438 (French-Canadian).

Mfr. No.	Name	Zero Duplication or Recommended Industrial
517274A1	FORD	**471231**!
517274A2	FORD	**471231**!
517323	C-R	**416706**
517324	C-R	**415995**!
517326	C-R	**472016**
517328	C-R	**415001**!
517329	C-R	**415960**!
517329	C-R	**415960**
5173384	GMC	**472258**
5173B	JN-MN	**417600**
517448	C-R	6283S
517448O	C-R	6283S
51749	GMC	**410102**
517505	C-R	**473234**
517511	C-R	**416956**
5175136	GMC	**471692**!
5175276	GMC	**472705**!
517536	GERL	**455019**!
5175836	OLIVE	**416654**!
5176287	GMC	**450039**
5176288	GMC	**471255**!
5176552	GMC	417548
517658	C-R	204002
517663	C-R	**416229**
5176B	JN-MN	**480210**!
517716	CATER	**415041**
517753	C-R	**416339**
517774	C-R	6818
5177786	GMC	481203N=
517794	C-R	9342S
517804	C-R	6597S
517804O	C-R	6597S
5178219	GMC	**350364**
517848	C-R	7896S
517859	C-R	**415351**!
517884	C-R	8835S
5178989	GMC	**415284**
5179	C-R	**471549**!
5179506	GMC	**481163**!
517957	C-R	**416654**
517998	C-R	**415449**
5179985	GMC	455956H
5180	C-R	**471549**!
5180093	GMC	75251S
518012	C-R	**415725**!
51802	GARLK	**472439**
5180285	GMC	**472016**
5180521	GMC	**410694**!
518055	C-R	5313
518055R91	IH	203003
518056	C-R	**480844**
51814	GARLK	**472572**!
518230	C-R	**473211**!
518236	C-R	**410308**!
5182365	GMC	**472012**
51826	GARLK	**473238**!
518301	C-R	7381S
518321	C-R	**473454**
518336	C-R	**472705**!
5183507	GMC	**416888**!
518369	C-R	8121S
518370	C-R	6840S
51838	GARLK	**473239**!
518389	C-R	204027
5183965	GMC	**473464**!
5183965	GMC	**473464**
5184	C-R	**471549**!
5184	C-R	472467
5184	EIMCO	473451!
51840S	TROS	**470954**!
518449R91	IH	**471737**
51845	C-R	417548
5184576	GMC	455290
51848	GARLK	**473240**!
51850	C-R	455956H
5185065	GMC	**350364**
51851	C-R	417548
51852	C-R	4494V
51852	C-R	455956H
518567	C-R	8421S
518574	C-R	**472150**
518581	C-R	6760S
5186	SPG	1960
518611	C-R	6098=
518660	C-R	9116S
518674	C-R	370037A
518674	C-R	370338A
518680	C-R	370021A
518682	C-R	370019A
518683	C-R	370021A
51869	GMC	**473458**!
5186F	OSHKO	**415995**!
5187	SPG	1955
5187	SPG	52X65X9!
5187281	GMC	**416107**!
5187281	GMC	455073
51875	MASTE	**481568**!
518753	C-R	6636S
518754	C-R	**470354**
518761	C-R	5778
518820	C-R	8126S
518821	C-R	7700S!
518821R91	IH	6590S
518925	GMC	41081S=
518FF2-L	C-R	5871
5190	ROTO	**471281**!
519019	C-R	**416332**!
51901S	TROS	**473227**
519042	ALLCH	**471619**!
5190707	GMC	**417191**
5190707	GMC	455165!
5191189	GMC	**415995**!
5191190	GMC	**473228**
5191214	GMC	**415027**
5191214	GMC	**415027**!
519130	C-R	**471766**!
5191600	GMC	**416288**!
5191707	GMC	**410694**!
5191708	GMC	**470088**
5191745	GMC	**415025**
5191843	GMC	**471526**!
5191923	GMC	**415035**!
5191923	GMC	**415035**
5191925	GMC	**412473**!
519194	C-R	**473445**
519213	C-R	3945
5192250	GMC	**471442**!
5192267	GMC	**471466**!
5192438	GMC	6370N
5192439	GMC	J712
5192505	GMC	6863S!
519257	C-R	**472705**!
5192617	GMC	**416666**
5192620	GMC	**471466**!
5192776	GMC	455251H
5192777	GMC	75251S
519280	C-R	340927
519289	C-R	**481181**!
519290	C-R	**474276**
519291	C-R	**471224**!
519297	C-R	240356
5193122	GMC	**471138**!
519316	C-R	**415960**
519316	C-R	**415960**!
519319	C-R	**412119**!
5193274	GMC	**415991**
5193274	GMC	455146!
5193413	GMC	5460$
5193598	GMC	425RR
5193599	GMC	**471255**!
5193684	GMC	**471733**
519371	C-R	**417484**!
519388	C-R	**472012**
5193LPD	JN-MN	**416156**
5194019	GMC	**472924**!
519405	C-R	**471193**
519413	C-R	**472299**
5194233	GMC	**412871**!
519430	C-R	**470774**!
519437	C-R	**471442**!
5194382	GMC	**472164**!
519443	C-R	7457N
5194462	GMC	**417550**
5194527	GMC	**415991**
5194527	GMC	455146!
519471	ALLCH	**471570**!
519475	C-R	8610
5194955	GMC	**415995**!
5194959	GMC	**416288**!
5195SS	JN-MN	1049
5196038	DETRO	**471570**
519611	C-R	**471267**!
519637	C-R	**476470**
5196633	GMC	340847
5196852	GMC	**415035**
5196852	GMC	**455134**!
51969	GMC	**471551**!
5196927	GMC	75251S
5197159	GMC	5460$
519759	C-R	**416500**
5197860	GMC	455251H$
5197860	GMC	5460
5198289	GMC	**417349**=
51983D	IH	**416288**!
5198502	GMC	J1107
5198503	GMC	452261H
5198645	GMC	455956H
5198LA	JN-MN	**415047***
5198LUP	JN-MN	**415047**
519913	C-R	**411330**!
5199366	GMC	**472311**
5199367	GMC	**472311**=
5199449	GMC	**455330**=
5199477	GMC	**455134**
5199B	JN-MN	**455576**!*
51A-EX6	ALLCH	417267
51A-MX7	ALLCH	450467
51A-TX4	ALLCH	200354
51JG-1	KEN	**472164**!
51X100	GARLK	**481537**
51X1006	GARLK	473451!*
51X1007	GARLK	473451!*
51X1008	GARLK	473451!
51X101	GARLK	**481537**
51X1012	GARLK	**473452***
51X1013	GARLK	**473452***
51X1014	GARLK	**473452**
51X102	GARLK	**481073***
51X1022	GARLK	473453*
51X1023	GARLK	473453*
51X1049	GARLK	**472572**!
51X105	GARLK	**481397***
51X1055	GARLK	**414045**!*
51X1056	GARLK	**414045**!*
51X106	GARLK	**481397**
51X1064	GARLK	**473239**
51X1067	GARLK	**473457**!*
51X1068	GARLK	**473457**!
51X1070	GARLK	**473240**!*
51X1071	GARLK	**473240**!
51X1077	GARLK	**473458**!*
51X1078	GARLK	**472439***
51X1079	GARLK	**472439***
51X1080	GARLK	**472439**
51X1081	GARLK	**471868***
51X1082	GARLK	**471868***
51X1083	GARLK	**471868**
51X1084	GARLK	**472572**!
51X1085	GARLK	**472572**!
51X1086	GARLK	**472572**!
51X1090	GARLK	**414045**!*
51X1091	GARLK	**414045**!*
51X1092	GARLK	**414045**!*
51X110	GARLK	**471529**
51X1105	GARLK	**473240**!*
51X1106	GARLK	**473240**!*
51X1107	GARLK	**473240**!
51X1133	GARLK	**473460**
51X1136	GARLK	**472394***
51X1140	GARLK	**473461**!
51X1151	GARLK	**450472**!*
51X1152	GARLK	**450472**!
51X1153	GARLK	**473241**
51X1154	GARLK	**473241***
51X1155	GARLK	**473241***
51X1163	GARLK	**450474***
51X1164	GARLK	**450474***
51X1167	GARLK	50528
51X1171	GARLK	**473461**!*
51X1172	GARLK	**473461**!*
51X1173	GARLK	**473461**!
51X1174	GARLK	**471391**!*
51X1175	GARLK	**471391**!*
51X1176	GARLK	**471391**!
51X1180	GARLK	**473462**
51X1181	GARLK	**473462**
51X1182	GARLK	**473462**
51X1202	GARLK	**470530**!
51X1208	GARLK	**473463**
51X122	GARLK	**470506**!
51X1222	GARLK	**472924**!
51X1223	GARLK	**472924**!
51X1224	GARLK	**472924**!
51X1225	GARLK	**470530**!
51X1226	GARLK	**470530**!*
51X1227	GARLK	**470530**!*
51X1228	GARLK	**472397**!
51X1229	GARLK	**472397**!
51X1230	GARLK	**472397**!
51X1231	GARLK	**473463***
51X1232	GARLK	**473463***
51X1233	GARLK	**473463**
51X1240	GARLK	**473464**
51X1240	GARLK	**473464**!
51X1241	GARLK	**473464**!
51X1241	GARLK	**473464**
51X1242	GARLK	**473464**!
51X1242	GARLK	**473464**
51X1246	GARLK	**412027***
51X1247	GARLK	**412027***
51X1248	GARLK	**412027**
51X1257	GARLK	**473466**
51X1259	GARLK	**472012***
51X1262	GARLK	**450307***
51X1265	GARLK	450311*
51X1271	GARLK	**416738**!
51X1271	GARLK	450096
51X1272	GARLK	**416738**!

! Industrial Size/Type * Minor Width Difference $ F-M Number Is Part Of A Kit
= The U.S. customer service number is 877-4-TIMKEN. The Canadian customer service numbers are 800-565-4927 (English) and 800-565-0438 (French-Canadian).

Mfr. No.	Name	Zero Duplication or Recommended Industrial
51X1272	GARLK	450096
51X1280	GARLK	450532*
51X1281	GARLK	450532*
51X1282	GARLK	**451948***
51X1283	GARLK	**451948***
51X1284	GARLK	**451948***
51X1285	GARLK	**473466***
51X1286	GARLK	**473466***
51X1287	GARLK	**473466**
51X1288	GARLK	**472012***
51X1289	GARLK	**472012***
51X1290	GARLK	**472012**
51X1291	GARLK	**450307***
51X1292	GARLK	**450307***
51X1293	GARLK	**450307**
51X1294	GARLK	450311*
51X1295	GARLK	450311*
51X1296	GARLK	450311
51X1300	GARLK	**416738!**
51X1300	GARLK	450096
51X1301	GARLK	**416738!**
51X1301	GARLK	450096
51X1302	GARLK	**416738!**
51X1302	GARLK	450096
51X1306	GARLK	450313*
51X1307	GARLK	450313*
51X1308	GARLK	450313
51X1309	GARLK	450532*
51X1310	GARLK	450532*
51X1311	GARLK	450532*
51X1312	GARLK	450343*
51X1313	GARLK	450343*
51X1314	GARLK	450343*
51X1331	GARLK	**410308!**
51X1332	GARLK	**410308!**
51X1334	GARLK	**472016***
51X1339	GARLK	**472409!**
51X1340	GARLK	**472409!**
51X1358	GARLK	**416267!***
51X1361	GARLK	**470898**
51X1362	GARLK	**470898**
51X1363	GARLK	**473467**
51X1364	GARLK	**473467**
51X1365	GARLK	**473467**
51X1366	GARLK	**472015!**
51X1367	GARLK	**472015!**
51X1368	GARLK	**472015!**
51X1369	GARLK	**410308!**
51X1370	GARLK	**410308!**
51X1371	GARLK	**410308!**
51X1372	GARLK	**472016***
51X1373	GARLK	**472016***
51X1374	GARLK	**472016**
51X1379	GARLK	**450621**
51X1380	GARLK	**450621***
51X1386	GARLK	450869*
51X1396	GARLK	**416267!***
51X1397	GARLK	**416267!***
51X1398	GARLK	**416267!**
51X1407	GARLK	**473471***
51X1409	GARLK	472020*
51X1424	GARLK	**412943***
51X1435	GARLK	**472234***
51X1436	GARLK	**472234***
51X1437	GARLK	**472234**
51X1438	GARLK	**472018***
51X1439	GARLK	**472018**
51X1440	GARLK	**472018***
51X1441	GARLK	**473471***
51X1442	GARLK	**473471**
51X1443	GARLK	**473471***
51X1444	GARLK	472020*

Mfr. No.	Name	Zero Duplication or Recommended Industrial
51X1445	GARLK	472020*
51X1446	GARLK	472020
51X1450	GARLK	**470354***
51X1451	GARLK	**470354**
51X1452	GARLK	**470354***
51X1459	GARLK	50631*
51X1460	GARLK	50631*
51X1461	GARLK	50631*
51X1472	GARLK	**471341!**
51X1478	GARLK	**473473**
51X1479	GARLK	**473473**
51X1487	GARLK	**410737!**
51X1488	GARLK	**410737!**
51X1502	GARLK	455136*
51X1503	GARLK	455136
51X1507	GARLK	**472299***
51X1508	GARLK	**472299***
51X1509	GARLK	**471341!**
51X1510	GARLK	**471272!**
51X1511	GARLK	**471272!**
51X1512	GARLK	**471272!**
51X1518	GARLK	**471138!**
51X1522	GARLK	**410737!**
51X1523	GARLK	**410737!**
51X1524	GARLK	**410737!**
51X1531	GARLK	**411253!**
51X1532	GARLK	**411253!**
51X1533	GARLK	**411253!**
51X1534	GARLK	**412920!**
51X1535	GARLK	**412920!**
51X1536	GARLK	**412920!**
51X1537	GARLK	455136*
51X1538	GARLK	455136*
51X1539	GARLK	455136
51X154	GARLK	**470390**
51X1540	GARLK	**411376!**
51X1541	GARLK	**411376!**
51X1542	GARLK	**411376!**
51X1546	GARLK	**415234!***
51X1547	GARLK	**415234!***
51X1548	GARLK	**415234!***
51X1549	GARLK	**415259!***
51X1550	GARLK	**415259!***
51X1551	GARLK	**415259!**
51X1562	GARLK	**472150***
51X1574	GARLK	**411394!**
51X1577	GARLK	**410694!***
51X1579	GARLK	**450133***
51X1580	GARLK	**450133***
51X1586	GARLK	**416444***
51X159	GARLK	**481443!**
51X1595	GARLK	455321*
51X1596	GARLK	455321
51X160	GARLK	**481443!***
51X1600	GARLK	**472150***
51X1601	GARLK	**472150***
51X1602	GARLK	**472150**
51X161	GARLK	**481568!**
51X1612	GARLK	**411394!**
51X1613	GARLK	**411394!**
51X1614	GARLK	**411394!**
51X162	GARLK	**481568!***
51X1633	GARLK	455321*
51X1634	GARLK	455321*
51X1635	GARLK	455321
51X1640	GARLK	**473474***
51X1643	GARLK	**470565!***
51X1649	GARLK	**473475**
51X1655	GARLK	**413246**
51X166	GARLK	**481644***
51X1664	GARLK	**410987!**
51X1665	GARLK	**410987!**

Mfr. No.	Name	Zero Duplication or Recommended Industrial
51X1667	GARLK	**416271!***
51X1673	GARLK	**410825**
51X1674	GARLK	**410825***
51X1676	GARLK	**416071***
51X1687	GARLK	**473475***
51X1688	GARLK	**473475**
51X1689	GARLK	**473475***
51X169	GARLK	**474273**
51X1693	GARLK	**413246**
51X1694	GARLK	**413246**
51X1695	GARLK	**413246**
51X1696	GARLK	**412119!**
51X1697	GARLK	**412119!**
51X1698	GARLK	**412119!**
51X1699	GARLK	**413247!**
51X170	GARLK	**474273**
51X1700	GARLK	**413247!**
51X1701	GARLK	**413247!**
51X1705	GARLK	**416271!***
51X1706	GARLK	**416271!***
51X1707	GARLK	**416271!**
51X1714	GARLK	**416071***
51X1715	GARLK	**416071***
51X1716	GARLK	**416071**
51X1724	GARLK	**471887***
51X1736	GARLK	**412040***
51X1748	GARLK	**411245!**
51X175	GARLK	**471539!**
51X176	GARLK	**471539!**
51X1771	GARLK	**412040***
51X1772	GARLK	**412040***
51X1773	GARLK	**412040**
51X1775	GARLK	50560*
51X1776	GARLK	50560*
51X178	GARLK	**471231!**
51X1780	GARLK	450104*
51X1781	GARLK	450104*
51X1782	GARLK	450104
51X1783	GARLK	**411245!**
51X1784	GARLK	**411245!**
51X1785	GARLK	**411245!**
51X179	GARLK	**474253**
51X180	GARLK	**472394***
51X181	GARLK	**450588***
51X181	GARLK	**450588***
51X1811	GARLK	**410496!**
51X182	GARLK	**450588**
51X1829	GARLK	**455079!***
51X184	GARLK	**471645**
51X1840	GARLK	**471271!**
51X1841	GARLK	**471271!**
51X1842	GARLK	**471271!**
51X1852	GARLK	**415449!**
51X1853	GARLK	**415449!**
51X1854	GARLK	**415449!**
51X1855	GARLK	**415001!**
51X1856	GARLK	**415001!**
51X1857	GARLK	**415001!**
51X1858	GARLK	**416273!**
51X1859	GARLK	**416273!**
51X186	GARLK	471686
51X1860	GARLK	**416273!**
51X1861	GARLK	**455079!***
51X1862	GARLK	**455079!***
51X1863	GARLK	**455079!**
51X187	GARLK	473412*
51X188	GARLK	473412
51X1882	GARLK	413479*
51X1883	GARLK	413479*
51X1884	GARLK	413479
51X1886	GARLK	**415302***
51X1887	GARLK	**415302**

Mfr. No.	Name	Zero Duplication or Recommended Industrial
51X1889	GARLK	455311*
51X189	GARLK	471729*
51X1890	GARLK	455311
51X1891	GARLK	**415988***
51X1892	GARLK	**415988***
51X1893	GARLK	**415988***
51X1894	GARLK	**417481***
51X1895	GARLK	**417481***
51X1896	GARLK	**417481***
51X1897	GARLK	**455280***
51X1898	GARLK	**455280***
51X1899	GARLK	**455280***
51X190	GARLK	471729
51X1909	GARLK	**411330!***
51X1910	GARLK	**411330!***
51X1911	GARLK	**411330!**
51X1912	GARLK	**415302***
51X1913	GARLK	**415302***
51X1914	GARLK	**415302**
51X1915	GARLK	455311*
51X1916	GARLK	455311*
51X1917	GARLK	455311
51X1918	GARLK	**415988***
51X1919	GARLK	**415988***
51X1920	GARLK	**415988***
51X1921	GARLK	**417481***
51X1922	GARLK	**417481***
51X1923	GARLK	**417481**
51X1924	GARLK	**455280***
51X1925	GARLK	**455280***
51X1926	GARLK	**455280***
51X1931	GARLK	**412871!**
51X1934	GARLK	**413248**
51X1937	GARLK	**450412***
51X1938	GARLK	**450412**
51X1947	GARLK	**415458!**
51X1949	GARLK	**417343!***
51X1953	GARLK	**415007***
51X1956	GARLK	**417082***
51X196	GARLK	473414*
51X1960	GARLK	**413248**
51X1961	GARLK	**413248**
51X1962	GARLK	**413248**
51X1966	GARLK	**415483!**
51X1967	GARLK	**415483!**
51X1968	GARLK	**415483!**
51X1972	GARLK	**415458!**
51X1973	GARLK	**415458!**
51X1974	GARLK	**415458!**
51X1975	GARLK	**417343!***
51X1976	GARLK	**417343!***
51X1977	GARLK	**417343!**
51X1978	GARLK	**415007***
51X1979	GARLK	**415007***
51X1980	GARLK	**415007***
51X1981	GARLK	**417082***
51X1982	GARLK	**417082***
51X1983	GARLK	**417082***
51X1995	GARLK	**455434**
51X200	GARLK	473414*
51X2014	GARLK	**455434***
51X2015	GARLK	**455434***
51X2016	GARLK	**455434**
51X2023	GARLK	**455151***
51X2024	GARLK	**455151***
51X2025	GARLK	**455151**
51X2026	GARLK	**455008***
51X2027	GARLK	**455008***
51X2028	GARLK	**455008***
51X2033	GARLK	480491*
51X2034	GARLK	480491
51X204	GARLK	**473415**

! Industrial Size/Type * Minor Width Difference

Mfr. No.	Name	Zero Duplication or Recommended Industrial
51X2042	GARLK	415984 ! *
51X2051	GARLK	416706 !
51X2056	GARLK	416664 !
51X2057	GARLK	416664 !
51X2058	GARLK	416664 !
51X2059	GARLK	417484 !
51X2060	GARLK	417484 !
51X2061	GARLK	417484 !
51X2062	GARLK	415984 ! *
51X2063	GARLK	415984 ! *
51X2064	GARLK	415984 ! *
51X2065	GARLK	417316 !
51X2066	GARLK	417316 !
51X2067	GARLK	417316 !
51X2068	GARLK	415960
51X2069	GARLK	415960
51X2070	GARLK	415960
51X2086	GARLK	455005 *
51X2087	GARLK	455005 *
51X2088	GARLK	455005
51X2089	GARLK	417485 *
51X2090	GARLK	417485 *
51X2091	GARLK	417485 *
51X2092	GARLK	475384 *
51X2093	GARLK	475384 *
51X2094	GARLK	475384 *
51X2101	GARLK	455005 *
51X2102	GARLK	455005 *
51X2103	GARLK	455005
51X2104	GARLK	417485 *
51X2105	GARLK	417485 *
51X2106	GARLK	417485 *
51X2116	GARLK	415303 ! *
51X2119	GARLK	417344 !
51X2130	GARLK	415303 ! *
51X2131	GARLK	415303 ! *
51X2132	GARLK	417344 !
51X2133	GARLK	417344 !
51X2134	GARLK	417344 !
51X2135	GARLK	416404 ! *
51X2136	GARLK	416404 ! *
51X2137	GARLK	416404 ! *
51X2138	GARLK	416921 !
51X2139	GARLK	416921 !
51X2140	GARLK	416921 !
51X2156	GARLK	417486 *
51X2157	GARLK	416956 *
51X2158	GARLK	416956 *
51X2159	GARLK	416956
51X2160	GARLK	417159 *
51X2161	GARLK	417159 *
51X2162	GARLK	417159 *
51X2163	GARLK	416654 !
51X2164	GARLK	416654 !
51X2165	GARLK	416654 !
51X2166	GARLK	417486 *
51X2167	GARLK	417486 *
51X2190	GARLK	55548 *
51X2191	GARLK	55548 *
51X2196	GARLK	455820 *
51X2197	GARLK	455820 *
51X2223	GARLK	455020 *
51X2224	GARLK	455020 *
51X241	GARLK	450038 *
51X242	GARLK	450038
51X2436	GARLK	415832 *
51X2437	GARLK	415832 *
51X2451	GARLK	55646 * =
51X2452	GARLK	55646 * =
51X257	GARLK	472951
51X257	GARLK	474252
51X258	GARLK	472951

Mfr. No.	Name	Zero Duplication or Recommended Industrial
51X258	GARLK	474252
51X259	GARLK	450039 *
51X260	GARLK	450039
51X269	GARLK	451583 ! *
51X270	GARLK	451583 ! *
51X2706	GARLK	417238
51X2707	GARLK	417238 *
51X271	GARLK	450545 *
51X272	GARLK	450545
51X273	GARLK	471648 *
51X274	GARLK	471648 *
51X276	GARLK	471688
51X277	GARLK	450040 *
51X278	GARLK	450040
51X279	GARLK	451082 *
51X280	GARLK	451082
51X285	GARLK	450339 *
51X286	GARLK	450339
51X287	GARLK	471224 !
51X288	GARLK	471224 !
51X289	GARLK	473380 *
51X290	GARLK	473380
51X291	GARLK	471649 !
51X292	GARLK	471649 !
51X293	GARLK	471689 !
51X294	GARLK	471689 !
51X295	GARLK	450593 *
51X295	GARLK	450593 ! *
51X296	GARLK	450593 !
51X297	GARLK	471733 *
51X298	GARLK	471733
51X299	GARLK	471744 ! *
51X2994	GARLK	417258
51X2995	GARLK	417258 *
51X300	GARLK	471744 !
51X301	GARLK	471760 *
51X302	GARLK	471760
51X303	GARLK	471619 !
51X304	GARLK	471619 !
51X308	GARLK	481650 *
51X341	GARLK	450044 *
51X342	GARLK	450044
51X347	GARLK	450159 *
51X348	GARLK	450159
51X3596	GARLK	417600 *
51X3597	GARLK	417600
51X3600	GARLK	417601 *
51X3601	GARLK	417601
51X3609	GARLK	417022 *
51X3610	GARLK	417604 *
51X3611	GARLK	417567 *
51X3619	GARLK	455462
51X3623	GARLK	415090
51X3627	GARLK	55218 =
51X364	GARLK	471736
51X3647	GARLK	417606 *
51X3648	GARLK	417606
51X3656	GARLK	55224 =
51X366	GARLK	473428
51X3660	GARLK	417605 *
51X3673	GARLK	417020
51X368	GARLK	471764 !
51X3680	GARLK	415227 !
51X3689	GARLK	55228 =
51X3694	GARLK	415482
51X37	GARLK	50199S !
51X37	GARLK	6863S !
51X3705	GARLK	415076 *
51X375	GARLK	450362
51X376	GARLK	450362 *
51X38	GARLK	50199S !
51X38	GARLK	6863S !

Mfr. No.	Name	Zero Duplication or Recommended Industrial
51X385	GARLK	473426 *
51X3863	GARLK	350435
51X3869	GARLK	472705 !
51X3871	GARLK	450342
51X3874	GARLK	471747 !
51X3882	GARLK	471344 *
51X3886	GARLK	450090 *
51X3889	GARLK	450965 *
51X39	GARLK	474277
51X3902	GARLK	455080 *
51X3905	GARLK	472234 *
51X3906	GARLK	472234
51X3909	GARLK	416921 !
51X3910	GARLK	417486 *
51X3912	GARLK	415995 !
51X3924	GARLK	417602 ! *
51X3932	GARLK	455123
51X3983	GARLK	417606 *
51X40	GARLK	474277
51X403	GARLK	450048 *
51X404	GARLK	450048
51X405	GARLK	450173 *
51X406	GARLK	450173
51X425	GARLK	471750 !
51X434	GARLK	450177 *
51X435	GARLK	450177 *
51X444	GARLK	471808 !
51X4483	GARLK	415442 !
51X4483	GARLK	55442
51X4484	GARLK	455396 *
51X449	GARLK	470050
51X450	GARLK	470050 *
51X452	GARLK	473424 !
51X454	GARLK	450124 =
51X455	GARLK	450124 =
51X4560	GARLK	415294 !
51X4579	GARLK	470088
51X4580	GARLK	415023
51X4586	GARLK	471570 !
51X4589	GARLK	450400 *
51X4590	GARLK	472164 !
51X4592	GARLK	470898
51X4593	GARLK	411330 ! *
51X46	GARLK	470004 !
51X4600	GARLK	474256
51X4603	GARLK	471231 !
51X4605	GARLK	471554 !
51X4610	GARLK	415871 *
51X4640	GARLK	415991
51X4640	GARLK	455146 !
51X4645	GARLK	450143
51X4646	GARLK	412119 !
51X4651	GARLK	415035
51X4651	GARLK	415035 !
51X4652	GARLK	416239 ! *
51X4654	GARLK	417172 *
51X4659	GARLK	473244
51X4662	GARLK	470506 !
51X4665	GARLK	472636 !
51X4667	GARLK	55548 *
51X4668	GARLK	417541 *
51X4669	GARLK	416892 ! *
51X4670	GARLK	472924 !
51X4671	GARLK	471504 !
51X4672	GARLK	472164 !
51X4681	GARLK	415124 *
51X4682	GARLK	417351 !
51X4686	GARLK	417344 !
51X4688	GARLK	415645 !
51X4688	GARLK	455104
51X4691	GARLK	473475 *
51X4693	GARLK	472144 ! *

Mfr. No.	Name	Zero Duplication or Recommended Industrial
51X4695	GARLK	416229 *
51X4704	GARLK	471785 !
51X4710	GARLK	455026 *
51X4712	GARLK	456105 *
51X4717	GARLK	455019 ! *
51X4718	GARLK	473212 ! *
51X4720	GARLK	416107 !
51X4720	GARLK	455073
51X4723	GARLK	417134
51X4727	GARLK	416865 ! *
51X4729	GARLK	457874
51X4732	GARLK	417196 ! *
51X4734	GARLK	415082 *
51X4735	GARLK	411376 !
51X4736	GARLK	55028 *
51X4738	GARLK	417621 !
51X4740	GARLK	414045 ! *
51X4745	GARLK	415991
51X4745	GARLK	455146 !
51X4752	GARLK	417512 *
51X4754	GARLK	471554 !
51X4766	GARLK	473232
51X4768	GARLK	415482 *
51X4771	GARLK	416892 ! *
51X4772	GARLK	416345 !
51X4772	GARLK	455033
51X4774	GARLK	55078S *
51X4775	GARLK	417526 *
51X4780	GARLK	416892 ! *
51X4781	GARLK	471549 !
51X4783	GARLK	417541 *
51X4784	GARLK	415072 *
51X4785	GARLK	415124 *
51X4787	GARLK	476470
51X4788	GARLK	415066 *
51X4789	GARLK	415327 *
51X4790	GARLK	416288 ! *
51X4792	GARLK	471354 ! *
51X4800	GARLK	417020 *
51X4801	GARLK	415227 ! *
51X4803	GARLK	55532 =
51X4804	GARLK	417487
51X4805	GARLK	55228 * =
51X4806	GARLK	455129 *
51X4808	GARLK	417247 ! *
51X4809	GARLK	415294 !
51X4825	GARLK	417254 *
51X4828	GARLK	416865 ! *
51X4832	GARLK	415303 ! *
51X4836	GARLK	417247 ! *
51X4837	GARLK	415196 ! *
51X4838	GARLK	413469 ! *
51X484	GARLK	450129
51X484	GARLK	472826 !
51X4842	GARLK	471472 !
51X4844	GARLK	415001 !
51X4847	GARLK	471539 !
51X485	GARLK	450129
51X485	GARLK	472826 !
51X4854	GARLK	415035
51X4855	GARLK	481537 *
51X4861	GARLK	473226 *
51X4862	GARLK	471870 !
51X4865	GARLK	417254 *
51X487	GARLK	473421 *
51X4871	GARLK	470954 ! *
51X4872	GARLK	417597 *
51X4873	GARLK	416888 !
51X4874	GARLK	55392 * =
51X4876	GARLK	455406 ! *
51X4878	GARLK	417602 ! *
51X488	GARLK	473421 *

! Industrial Size/Type * Minor Width Difference

= The U.S. customer service number is 877-4-TIMKEN. The Canadian customer service numbers are 800-565-4927 (English) and 800-565-0438 (French-Canadian).

Mfr. No.	Name	Zero Duplication or Recommended Industrial
51X4882	GARLK	417262!
51X4883	GARLK	417269!
51X489	GARLK	473421*
51X4891	GARLK	471862*
51X4897	GARLK	415025*
51X4899	GARLK	455536*
51X490	GARLK	473211!*
51X4900	GARLK	471391!*
51X4902	GARLK	417269!
51X4904	GARLK	416556!
51X4904	GARLK	472157
51X4907	GARLK	50026*
51X491	GARLK	473211!
51X4912	GARLK	415150!*
51X4914	GARLK	416271!*
51X4916	GARLK	470898
51X492	GARLK	473211!*
51X4924	GARLK	417597*
51X4925	GARLK	417606*
51X4928	GARLK	416154!*
51X4929	GARLK	455462*
51X493	GARLK	473212!*
51X4934	GARLK	415066*
51X4938	GARLK	412920!
51X494	GARLK	473212!*
51X4945	GARLK	416738!
51X4945	GARLK	450096
51X495	GARLK	473212!
51X4958	GARLK	411394!
51X4959	GARLK	416268
51X4966	GARLK	417247!*
51X4967	GARLK	417549!*
51X4968	GARLK	416144*
51X497	GARLK	323138!*
51X4976	GARLK	472843*
51X498	GARLK	473213!
51X4982	GARLK	417547*
51X4987	GARLK	415458!
51X4988	GARLK	470774!
51X499	GARLK	450503*=
51X4991	GARLK	455480!*
51X4992	GARLK	473237!
51X4998	GARLK	417486*
51X5	GARLK	350364
51X500	GARLK	450503*=
51X5002	GARLK	415683*
51X5005	GARLK	472179
51X50056E	JOHND	471272=
51X5007	GARLK	472287!*
51X5008	GARLK	415437
51X5008	GARLK	415437!
51X501	GARLK	450503*=
51X5025	GARLK	416288!*
51X5028	GARLK	455476*
51X5030	GARLK	415023
51X5031	GARLK	415072*
51X5041	GARLK	471538!*
51X5043	GARLK	415371*
51X5049	GARLK	415034!
51X5050	GARLK	350364*
51X5051	GARLK	417539!*
51X5053	GARLK	473242*
51X5059	GARLK	417351!
51X5060	GARLK	455336*
51X5061	GARLK	415483!
51X5063	GARLK	55028*
51X5066	GARLK	415045!*
51X5078	GARLK	472397!
51X5079	GARLK	416339
51X5079	GARLK	455031!
51X5082	GARLK	450124=
51X511	GARLK	473435*
51X512	GARLK	473435*
51X513	GARLK	473435*
51X514	GARLK	473436*
51X515	GARLK	473436
51X516	GARLK	473436*
51X517	GARLK	50168*
51X518	GARLK	50168*
51X519	GARLK	50168
51X520	GARLK	450054*
51X521	GARLK	450054*
51X522	GARLK	450054
51X540	GARLK	472287!*
51X558	GARLK	471835!
51X560	GARLK	472843*
51X561	GARLK	472843
51X574	GARLK	50254*=
51X575	GARLK	50254*=
51X576	GARLK	50254*=
51X5886	GARLK	455008*
51X5887	GARLK	473446*
51X5892	GARLK	416888!
51X5893	GARLK	472810!
51X5897	GARLK	455080*
51X5900	GARLK	473466*
51X5906	GARLK	417020*
51X5907	GARLK	416404!*
51X5912	GARLK	417548*
51X5913	GARLK	472018*
51X5914	GARLK	473010
51X5920	GARLK	417567*
51X5922	GARLK	417349*
51X5925	GARLK	417486*
51X5929	GARLK	415551*
51X5930	GARLK	417211!*
51X5933	GARLK	55301S*
51X5938	GARLK	415371*
51X5945	GARLK	417278*
51X5947	GARLK	411253!
51X5948	GARLK	415984!*
51X5953	GARLK	417357
51X5953	GARLK	455192!
51X5957	GARLK	471413!*
51X5959	GARLK	415090*
51X5960	GARLK	417606*
51X5966	GARLK	472179
51X5968	GARLK	473474
51X5969	GARLK	455509
51X5978	GARLK	473380*
51X5980	GARLK	412119!
51X5981	GARLK	55078S*
51X5983	GARLK	415036*
51X6	GARLK	350364*
51X60	GARLK	471530
51X6062	GARLK	472810!
51X6099	GARLK	481397*
51X610	GARLK	473437*
51X611	GARLK	473437*
51X612	GARLK	473437
51X6127	GARLK	471231!
51X614	GARLK	471862*
51X615	GARLK	471862
51X619	GARLK	473438*
51X6192	GARLK	470806*
51X620	GARLK	473438*
51X621	GARLK	473438
51X6224	GARLK	480630!
51X6230	GARLK	473231
51X6231	GARLK	473231
51X6245	GARLK	450400*
51X6252	GARLK	472164!
51X6266	GARLK	417474*
51X6271	GARLK	470625!*
51X6272	GARLK	472492!
51X6289	GARLK	471498*
51X6328	GARLK	417621!
51X6333	GARLK	455330!*
51X6335	GARLK	455583N!*
51X6340	GARLK	417600*
51X6353	GARLK	473405*
51X6356	GARLK	476470*
51X6358	GARLK	415991
51X6358	GARLK	455146!
51X6359	GARLK	416332!
51X6360	GARLK	415035
51X6360	GARLK	415035!
51X6361	GARLK	415196!*
51X6363	GARLK	416888!
51X6365	GARLK	415725!*
51X6366	GARLK	417549!*
51X6369	GARLK	417515*
51X6370	GARLK	416229*
51X6374	GARLK	416364!*
51X6375	GARLK	416239!*
51X6378	GARLK	415867*
51X6385	GARLK	417603!
51X6387	GARLK	55301S*
51X6389	GARLK	55222*=
51X6390	GARLK	55239*=
51X6391	GARLK	417605*
51X6395	GARLK	415482*
51X6411	GARLK	471413*
51X6413	GARLK	417247!*
51X6414	GARLK	473460*
51X6415	GARLK	471554!
51X6418	GARLK	415295*
51X6422	GARLK	417598*
51X6430	GARLK	471785!
51X6431	GARLK	455022*
51X6433	GARLK	416364!*
51X6434	GARLK	417357
51X6434	GARLK	455192!
51X6437	GARLK	416239!*
51X6438	GARLK	472397!
51X6439	GARLK	417350!
51X6440	GARLK	471272!
51X6444	GARLK	416654!
51X6446	GARLK	412473!
51X6450	GARLK	471619!
51X6451	GARLK	417488!*
51X6456	GARLK	415449!
51X6457	GARLK	450129
51X6457	GARLK	472826!
51X6461	GARLK	456105*
51X6462	GARLK	473225!*
51X6465	GARLK	415449!
51X6466	GARLK	471763*
51X6467	GARLK	417316!
51X6468	GARLK	416071*
51X6469	GARLK	472394*
51X6471	GARLK	417316!
51X6474	GARLK	470682*
51X6475	GARLK	471835!
51X6478	GARLK	471272!
51X6479	GARLK	471192
51X6484	GARLK	416666*
51X6487	GARLK	471887*
51X6489	GARLK	476470
51X6497	GARLK	417487
51X6499	GARLK	417487
51X6500	GARLK	471267!*
51X6502	GARLK	416288!*
51X6506	GARLK	471271!
51X651	GARLK	471820*
51X6510	GARLK	417600*
51X6511	GARLK	415088
51X6511	GARLK	415088!
51X6513	GARLK	416167!
51X6515	GARLK	455434*
51X6516	GARLK	473231
51X6517	GARLK	471808!*
51X6521	GARLK	455462*
51X6522	GARLK	471984*
51X6523	GARLK	471267!*
51X6528	GARLK	418028
51X6528	GARLK	455137!
51X6529	GARLK	473224!*
51X6530	GARLK	415072*
51X6534	GARLK	415991
51X6534	GARLK	455146!
51X6541	GARLK	411245!
51X6545	GARLK	415711*
51X6546	GARLK	472439*
51X6547	GARLK	473237!*
51X6548	GARLK	473243*
51X6549	GARLK	473405*
51X6550	GARLK	417605*
51X6551	GARLK	473228
51X6554	GARLK	473236!*
51X6556	GARLK	417357
51X6556	GARLK	455192!
51X6560	GARLK	412040*
51X6563	GARLK	415045!*
51X6564	GARLK	415551*
51X6565	GARLK	417357
51X6565	GARLK	455192!
51X6568	GARLK	415035
51X6568	GARLK	415035!
51X6573	GARLK	415090*
51X6576	GARLK	470774!
51X6578	GARLK	415449!
51X6580	GARLK	450593!
51X6581	GARLK	417603!*
51X6584	GARLK	476470
51X6585	GARLK	455655!*
51X6586	GARLK	415090*
51X6588	GARLK	416654!
51X6590	GARLK	416332!
51X6592	GARLK	473450
51X6593	GARLK	472015!
51X6599	GARLK	416921!
51X65X7SC	TRSCM	51X65X7!
51X65X7TC	TRSCM	51X65X7!
51X6600	GARLK	416345!
51X6600	GARLK	455033
51X6602	GARLK	476470
51X6603	GARLK	415725!*
51X6604	GARLK	472015!
51X6605	GARLK	473243*
51X6608	GARLK	471870!
51X6610	GARLK	473228
51X6616	GARLK	455476*
51X663	GARLK	470487!
51X6630	GARLK	55367*=
51X6632	GARLK	455151
51X6634	GARLK	415116*
51X6635	GARLK	417542*
51X6637	GARLK	471466!
51X6638	GARLK	473240!*
51X6639	GARLK	473197
51X6640	GARLK	415725!*
51X6644	GARLK	457874
51X6645	GARLK	415991
51X6645	GARLK	455146!
51X6651	GARLK	417343!*
51X6652	GARLK	417496*
51X666	GARLK	473440!

! Industrial Size/Type * Minor Width Difference

= The U.S. customer service number is 877-4-TIMKEN. The Canadian customer service numbers are 800-565-4927 (English) and 800-565-0438 (French-Canadian).

Mfr. No.	Name	Zero Duplication or Recommended Industrial
51X6664	GARLK	415379
51X6664	GARLK	415379!
51X6665	GARLK	417541*
51X6667	GARLK	470059
51X6667	GARLK	470380!
51X6668	GARLK	413478*
51X6670	GARLK	415294!
51X6674	GARLK	471795
51X6675	GARLK	450165
51X6675	GARLK	471801!
51X6678	GARLK	417082*
51X6679	GARLK	417191
51X6679	GARLK	456585
51X6680	GARLK	416921!
51X6682	GARLK	472636!
51X6687	GARLK	415077*
51X669	GARLK	474281!
51X6692	GARLK	417355!*
51X670	GARLK	470625!
51X6700	GARLK	415302*
51X6701	GARLK	473214
51X6705	GARLK	471821!
51X6706	GARLK	473464!
51X6706	GARLK	473464
51X6707	GARLK	417554!*
51X6708	GARLK	476470
51X671	GARLK	470625!
51X6711	GARLK	415725!*
51X6713	GARLK	417601*
51X6714	GARLK	415988*
51X672	GARLK	470625!
51X6722	GARLK	417601*
51X6723	GARLK	417488!*
51X6730	GARLK	417344!
51X6732	GARLK	471760*
51X6733	GARLK	330385!
51X6734	GARLK	416154!*
51X6739	GARLK	417621!
51X6741	GARLK	417254*
51X6745	GARLK	471766!
51X6746	GARLK	415683*
51X6749	GARLK	471255!
51X6750	GARLK	415645!
51X6750	GARLK	455104
51X6753	GARLK	474265
51X6757	GARLK	411376!
51X6760	GARLK	417603!*
51X6762	GARLK	417134*
51X6764	GARLK	455015*
51X6765	GARLK	417278*
51X6767	GARLK	415035
51X6768	GARLK	417020*
51X6770	GARLK	417604*
51X6773	GARLK	415551*
51X6774	GARLK	473214
51X6794	GARLK	473367!
51X6794	GARLK	473367
51X6795	GARLK	471341!
51X6796	GARLK	417362!*
51X6797	GARLK	455330!*
51X6798	GARLK	415559*
51X6799	GARLK	415035
51X6800	GARLK	417082*
51X6806	GARLK	416339
51X6806	GARLK	455031!
51X6832	GARLK	472179
51X6833	GARLK	417606*
51X6835	GARLK	417509*
51X6838	GARLK	9568*
51X6839	GARLK	476470*
51X6840	GARLK	417506*
51X6842	GARLK	417020*
51X6844	GARLK	455397*
51X6847	GARLK	417526*
51X6853	GARLK	472394*
51X6856	GARLK	471255!
51X6857	GARLK	471692!
51X6858	GARLK	55141*
51X6860	GARLK	473010
51X6864	GARLK	417073*
51X6865	GARLK	417481*
51X6866	GARLK	412871!
51X6868	GARLK	417351!
51X6870	GARLK	455134!*
51X6871	GARLK	417515*
51X6872	GARLK	417362!*
51X6888	GARLK	417584*
51X689	GARLK	470487!
51X6892	GARLK	416239!*
51X6893	GARLK	416865!*
51X6895	GARLK	455406!*
51X6896	GARLK	481073*
51X6898	GARLK	470565!*
51X6899	GARLK	473229
51X690	GARLK	470487!
51X6900	GARLK	417316!
51X6901	GARLK	416332!
51X6904	GARLK	472397!
51X6907	GARLK	415027*
51X6914	GARLK	416476!
51X6917	GARLK	417525*
51X692	GARLK	473440!*
51X6920	GARLK	415294!
51X6921	GARLK	455462*
51X6923	GARLK	415711*
51X6924	GARLK	416666*
51X6927	GARLK	471554!
51X693	GARLK	473440!
51X6931	GARLK	55441*=
51X6934	GARLK	473235!*
51X6937	GARLK	470625!
51X6938	GARLK	417269!
51X6939	GARLK	417541*
51X6946	GARLK	417539!*
51X6947	GARLK	416364!*
51X6949	GARLK	415138!*
51X6950	GARLK	450869*
51X6952	GARLK	417362!*
51X6955	GARLK	471141!
51X6957	GARLK	470354*
51X6959	GARLK	455476*
51X6961	GARLK	474264
51X6966	GARLK	455655!*
51X6968	GARLK	415021*
51X6971	GARLK	471558*
51X6975	GARLK	9568*
51X6978	GARLK	415196!*
51X6981	GARLK	455194*
51X6982	GARLK	416345!
51X6982	GARLK	455033
51X6984	GARLK	471564*
51X6990	GARLK	415035
51X6991	GARLK	416125!*
51X6992	GARLK	476838!
51X6993	GARLK	471765!
51X6995	GARLK	471138!*
51X7007	GARLK	472810!
51X7039	GARLK	471539!
51X705	GARLK	472299
51X7060	GARLK	474256
51X7069	GARLK	470774!
51X7072	GARLK	474264
51X7081	GARLK	473237!*
51X7090	GARLK	471271!
51X7091	GARLK	415082*
51X7099	GARLK	472924!
51X7101	GARLK	417604
51X7104	GARLK	415458!
51X7110	GARLK	416888!
51X7114	GARLK	415551*
51X7115	GARLK	415991
51X7115	GARLK	455146!
51X7120	GARLK	417366!*
51X7121	GARLK	473437*
51X7125	GARLK	473231
51X7128	GARLK	416666*
51X7130	GARLK	471316
51X7134	GARLK	416154!*
51X7137	GARLK	470059
51X7137	GARLK	470380!
51X7140	GARLK	472029*
51X7141	GARLK	416556!
51X7141	GARLK	472157
51X7145	GARLK	472012*
51X7146	GARLK	350435*
51X7152	GARLK	473367!
51X7152	GARLK	473367
51X7153	GARLK	417350!
51X7154	GARLK	415036*
51X7155	GARLK	415072*
51X7159	GARLK	455005*
51X716	GARLK	470682*
51X7160	GARLK	472016*
51X7162	GARLK	415351!*
51X7165	GARLK	416891!*
51X7174	GARLK	472018*
51X7176	GARLK	471192
51X7177	GARLK	416706!
51X7178	GARLK	55199*=
51X7186	GARLK	471760*
51X7187	GARLK	415483!
51X7192	GARLK	415379
51X7192	GARLK	415379!
51X7194	GARLK	412473!
51X7195	GARLK	480630!
51X7196	GARLK	415960
51X7197	GARLK	415995!
51X7199	GARLK	417487
51X720	GARLK	471316
51X7205	GARLK	416153!
51X7206	GARLK	415711*
51X7210	GARLK	455151*
51X722	GARLK	473441*
51X7220	GARLK	455191*
51X7221	GARLK	416313*
51X7223	GARLK	472319*
51X7224	GARLK	415001!
51X7226	GARLK	474264
51X7229	GARLK	455189*
51X7230	GARLK	415437!
51X7230	GARLK	415437
51X7231	GARLK	417354!*
51X7233	GARLK	415551*
51X7238	GARLK	450104*
51X7241	GARLK	455406!*
51X7245	GARLK	415371*
51X7247	GARLK	417562*
51X7248	GARLK	473459
51X7249	GARLK	415960
51X7253	GARLK	415027
51X7253	GARLK	415027!
51X7254	GARLK	473234
51X7255	GARLK	417351!
51X7258	GARLK	416892!*
51X7259	GARLK	450133*
51X726	GARLK	450273
51X7262	GARLK	474274
51X7265	GARLK	417362!*
51X7269	GARLK	415437
51X7269	GARLK	415437!
51X7270	GARLK	417181!*
51X7272	GARLK	472492!
51X7276	GARLK	416077*
51X7277	GARLK	417474
51X7280	GARLK	471821!
51X7282	GARLK	416339
51X7282	GARLK	455031!
51X7284	GARLK	417539!*
51X7285	GARLK	411245!
51X7289	GARLK	417191
51X7289	GARLK	456585
51X7291	GARLK	416891!*
51X7292	GARLK	417316!
51X7299	GARLK	471529*
51X7307	GARLK	472164!
51X7313	GARLK	418028
51X7313	GARLK	455137!
51X7314	GARLK	55199*=
51X7317	GARLK	417562*
51X7318	GARLK	455406!*
51X732	GARLK	451817
51X7320	GARLK	471424!*
51X7324	GARLK	415027*
51X7327	GARLK	471887*
51X7328	GARLK	415995!
51X7332	GARLK	415027*
51X7334	GARLK	455144*
51X734	GARLK	450065*
51X7342	GARLK	415645!
51X7342	GARLK	455104
51X7346	GARLK	451948*
51X7347	GARLK	415027
51X7347	GARLK	415027!
51X7348	GARLK	417535*
51X7349	GARLK	475384*
51X735	GARLK	450065*
51X7350	GARLK	415991
51X7350	GARLK	455146!
51X7353	GARLK	417601*
51X7357	GARLK	412473!
51X7358	GARLK	471646!
51X7364	GARLK	455019!*
51X7366	GARLK	417550*
51X7368	GARLK	455480!*
51X7371	GARLK	415551*
51X7372	GARLK	471808!*
51X7374	GARLK	476470
51X7375	GARLK	417596*
51X7382	GARLK	411253!
51X7386	GARLK	472258!*
51X7389	GARLK	415379
51X7389	GARLK	415379!
51X7390	GARLK	471766!
51X7391	GARLK	474255
51X740	GARLK	482253*
51X7402	GARLK	415088
51X7402	GARLK	415088!
51X7409	GARLK	416107!
51X7409	GARLK	455073
51X741	GARLK	482253
51X7418	GARLK	415683*
51X7419	GARLK	476470
51X7420	GARLK	472029*
51X7423	GARLK	6936S
51X743	GARLK	451469*
51X7433	GARLK	415072*
51X7435	GARLK	472020*
51X7436	GARLK	415327*

! Industrial Size/Type * Minor Width Difference

= The U.S. customer service number is 877-4-TIMKEN. The Canadian customer service numbers are 800-565-4927 (English) and 800-565-0438 (French-Canadian).

Mfr. No.	Name	Zero Duplication or Recommended Industrial
51X7439	GARLK	55199*=
51X7440	GARLK	**415379**
51X7440	GARLK	**415379**!
51X7447	GARLK	470059
51X7447	GARLK	**470380**!
51X7448	GARLK	**415036***
51X7510	GARLK	**472311**!
51X7516	GARLK	**474278**!
51X7518	GARLK	**471766**!
51X7523	GARLK	**471862***
51X753	GARLK	450274
51X7542	GARLK	**417349***
51X7544	GARLK	**415437**
51X7544	GARLK	**415437**!
51X7549	GARLK	**413246**
51X7551	GARLK	**415088**
51X7551	GARLK	**415088**!
51X7554	GARLK	**415683***
51X7555	GARLK	**471984***
51X7559	GARLK	**417356**!
51X7559	GARLK	455188
51X7560	GARLK	**416154**!*
51X7561	GARLK	**417602**!*
51X7562	GARLK	**415219***
51X7563	GARLK	**472492**!
51X7564	GARLK	**471271**!
51X7566	GARLK	**416865**!*
51X7568	GARLK	**470625**!
51X7572	GARLK	**417316**!
51X7574	GARLK	**415303**!*
51X7578	GARLK	417522
51X7590	GARLK	**472157**
51X7590	GARLK	**472157**!
51X7594	GARLK	**416271**!*
51X7603	GARLK	**416476**!
51X7610	GARLK	**417549**!*
51X7611	GARLK	**417198***
51X7612	GARLK	**415072***
51X7615	GARLK	**415027**
51X7615	GARLK	**415027**!
51X7616	GARLK	**416332**!
51X7626	GARLK	**417549**!*
51X7629	GARLK	**417562***
51X7633	GARLK	**471887***
51X7642	GARLK	**416294**!*
51X7646	GARLK	**473454**
51X7649	GARLK	**472018***
51X7652	GARLK	**417541***
51X7653	GARLK	**415076***
51X7659	GARLK	**415034**!
51X7661	GARLK	**471192**
51X7668	GARLK	**417316**!
51X7669	GARLK	**417298***
51X7670	GARLK	**476470**
51X7671	GARLK	**415259**!*
51X7675	GARLK	**471787**!
51X7677	GARLK	**472319***
51X7684	GARLK	**473234**
51X7685	GARLK	**415938***
51X7686	GARLK	**415041***
51X7687	GARLK	**481792**
51X7689	GARLK	**416158***
51X7690	GARLK	**415187***
51X7695	GARLK	**474281**!
51X770	GARLK	**473010**
51X7700	GARLK	**413246**
51X7717	GARLK	**417171**!*
51X7722	GARLK	**472157**!
51X7722	GARLK	**472157**
51X7723	GARLK	**472636**!
51X7745	GARLK	**417556***
51X7746	GARLK	450908=
51X7747	GARLK	**417484**!
51X7749	GARLK	417534*
51X7752	GARLK	**471760***
51X7758	GARLK	**417601***
51X7759	GARLK	**457874**
51X7764	GARLK	**416273**!
51X7765	GARLK	**418028**
51X7765	GARLK	455137!
51X7768	GARLK	**450307***
51X7772	GARLK	455820*
51X7774	GARLK	**415227**!*
51X7775	GARLK	455556*
51X7776	GARLK	**415458**!
51X7780	GARLK	**415128***
51X7783	GARLK	**417604***
51X7784	GARLK	**417181**!*
51X7785	GARLK	**455123***
51X7786	GARLK	**455123***
51X7787	GARLK	**417351**!
51X779	GARLK	**474274**
51X7791	GARLK	**416339**
51X7791	GARLK	455031!
51X7795	GARLK	**417247**!*
51X7796	GARLK	**455584***
51X7803	GARLK	**415196**!*
51X7812	GARLK	**416345**!
51X7812	GARLK	455033
51X7814	GARLK	**415035**
51X7819	GARLK	**416167**!
51X7824	GARLK	**415090***
51X7825	GARLK	**417597***
51X7829	GARLK	**416664**!
51X7831	GARLK	**471646**!
51X7837	GARLK	417513*
51X7839	GARLK	**417252***
51X7840	GARLK	55357*
51X7842	GARLK	472020*
51X7861	GARLK	**415196**!*
51X7864	GARLK	450285*
51X7873	GARLK	**473231**
51X7877	GARLK	**415066***
51X7879	GARLK	417780*
51X7880	GARLK	416556!
51X7880	GARLK	**472157**
51X790	GARLK	**473231**
51X7907	GARLK	470950!
51X7907	GARLK	6241S
51X7909	GARLK	**417602**!*
51X791	GARLK	**473231**
51X7915	GARLK	**471835**!
51X792	GARLK	**473231**
51X7922	GARLK	55223*=
51X793	GARLK	**473367**!
51X793	GARLK	**473367**
51X7937	GARLK	2081
51X794	GARLK	**473367**
51X794	GARLK	**473367**!
51X795	GARLK	**473367**!
51X795	GARLK	**473367**
51X799	GARLK	450260*
51X7993	GARLK	**417273***
51X800	GARLK	450260*
51X801	GARLK	450260
51X805	GARLK	450073*
51X806	GARLK	450073*
51X807	GARLK	450073
51X8102	GARLK	455556*
51X8104	GARLK	**472299***
51X8111	GARLK	**417196**!*
51X8112	GARLK	**417511***
51X8117	GARLK	**415023**
51X8120	GARLK	**415371***
51X8127	GARLK	**416891**!*
51X8128	GARLK	**417355**!*
51X8129	GARLK	**470774**!
51X8131	GARLK	450285*
51X8135	GARLK	**473227**
51X8140	GARLK	**455462***
51X8151	GARLK	**415991**
51X8151	GARLK	455146!
51X8153	GARLK	**415458**!
51X8154	GARLK	**416404**!*
51X8156	GARLK	**417171**!*
51X8161	GARLK	**415045**!*
51X8165	GARLK	**415066***
51X8169	GARLK	**457874***
51X8173	GARLK	**416077***
51X8187	GARLK	**472475***
51X8188	GARLK	**455019**!*
51X8192	GARLK	**417273***
51X820	GARLK	450415*
51X8205	GARLK	**417596**
51X8208	GARLK	417513*
51X821	GARLK	450415*
51X8213	GARLK	**472636**!
51X8214	GARLK	455820*
51X822	GARLK	450415
51X8222	GARLK	**417621**!
51X8224	GARLK	**455191***
51X8231	GARLK	**417191**
51X8231	GARLK	456585
51X8233	GARLK	**476470***
51X8238	GARLK	**417606***
51X8243	GARLK	**415072***
51X8245	GARLK	**417487**
51X8248	GARLK	470950!
51X8248	GARLK	6241S
51X825	GARLK	**414268**!
51X8251	GARLK	**417596***
51X8252	GARLK	**415294**!
51X8262	GARLK	**415124***
51X8265	GARLK	**481792***
51X8266	GARLK	**473444**
51X8267	GARLK	**471551**!
51X8270	GARLK	**410308**!
51X8272	GARLK	**471472**!
51X8274	GARLK	**473239**
51X8275	GARLK	450165
51X8275	GARLK	**471801**!
51X8278	GARLK	**416153**!
51X8280	GARLK	**415379**!
51X8280	GARLK	**415379**
51X8284	GARLK	**474256**
51X8292	GARLK	**473458**!
51X8293	GARLK	**473238**!*
51X830	GARLK	**473445***
51X8300	GARLK	**415327***
51X8306	GARLK	**416107**!
51X8306	GARLK	455073
51X8309	GARLK	**417538***
51X831	GARLK	**473445***
51X8310	GARLK	**417539**!*
51X8311	GARLK	**415437**
51X8311	GARLK	**415437**!
51X8314	GARLK	**471765**!
51X8328	GARLK	455197N*
51X8330	GARLK	**416154**!*
51X8331	GARLK	**417258***
51X8384	GARLK	**415867***
51X839	GARLK	**473235**!*
51X8396	GARLK	**415937**!*
51X8400	GARLK	**415142***
51X8401	GARLK	**473454**
51X8404	GARLK	**413469**!*
51X8409	GARLK	**471633**!*
51X8410	GARLK	**417512***
51X8416	GARLK	**410737**!
51X8417	GARLK	**455584***
51X8419	GARLK	**415138**!*
51X8423	GARLK	**415072***
51X8430	GARLK	**456105***
51X8437	GARLK	**55301S***
51X8442	GARLK	**417252***
51X8443	GARLK	**416229***
51X8460	GARLK	**416891**!*
51X8462	GARLK	**415090***
51X8466	GARLK	**417509***
51X8469	GARLK	415871*
51X8470	GARLK	**417159***
51X8471	GARLK	**417556***
51X8477	GARLK	**455026***
51X8488	GARLK	**455566***
51X8494	GARLK	**415482***
51X8498	GARLK	**471341**!
51X8521	GARLK	**412040***
51X8530	GARLK	**416664**!
51X8551	GARLK	**416149***
51X8556	GARLK	**417507**
51X8556	GARLK	**417507**!
51X8560	GARLK	**417604***
51X8566	GARLK	**455576**!*
51X8569	GARLK	**471818***
51X8570	GARLK	**415263***
51X8571	GARLK	**413248**
51X8572	GARLK	**472029***
51X8573	GARLK	**415001**!
51X8579	GARLK	**417601***
51X8585	GARLK	**415072***
51X8591	GARLK	415871*
51X8592	GARLK	**417211**!*
51X8596	GARLK	**455584***
51X8608	GARLK	455022*
51X862	GARLK	50327*
51X8628	GARLK	**417542***
51X8629	GARLK	**417539**!*
51X8631	GARLK	**416167**!
51X8633	GARLK	**416154**!*
51X8635	GARLK	455197N*
51X8636	GARLK	**415196**!*
51X8638	GARLK	**417205**!*
51X864	GARLK	50327*
51X8640	GARLK	**415984**!*
51X8643	GARLK	**472572**!
51X8646	GARLK	**450068***
51X8652	GARLK	50254*=
51X8657	GARLK	**417262**!
51X8662	GARLK	**417020***
51X8663	GARLK	**417541***
51X8665	GARLK	**417603**!*
51X8668	GARLK	455685*
51X8676	GARLK	**417159**
51X8678	GARLK	**417366**!*
51X8679	GARLK	**455151***
51X8680	GARLK	**415227**!*
51X8681	GARLK	**417501***
51X8682	GARLK	470645*
51X8683	GARLK	**417511***
51X8687	GARLK	**415128***
51X8696	GARLK	**417485***
51X8697	GARLK	**417509***
51X8698	GARLK	**455297***
51X8700	GARLK	**418028**
51X8700	GARLK	455137!
51X8704	GARLK	**470625**!
51X8705	GARLK	480281!
51X8708	GARLK	417780*

! Industrial Size/Type * Minor Width Difference

= The U.S. customer service number is 877-4-TIMKEN. The Canadian customer service numbers are 800-565-4927 (English) and 800-565-0438 (French-Canadian).

Mfr. No.	Name	Zero Duplication or Recommended Industrial
51X871	GARLK	**450068***
51X8712	GARLK	**415645!**
51X8712	GARLK	455104
51X872	GARLK	**450068***
51X8724	GARLK	**473463***
51X8726	GARLK	**417349***
51X8728	GARLK	**470605!***
51X873	GARLK	**450068**
51X8731	GARLK	**417356!**
51X8731	GARLK	455188
51X8732	GARLK	**473239**
51X8734	GARLK	**471820***
51X8736	GARLK	**415072***
51X8738	GARLK	**470565!***
51X874	GARLK	50075*=
51X8744	GARLK	**417357**
51X8744	GARLK	455192!
51X8745	GARLK	**416891!***
51X8747	GARLK	**415867***
51X875	GARLK	50075*=
51X8752	GARLK	**417362!***
51X8755	GARLK	55223*=
51X8756	GARLK	**417020***
51X8757	GARLK	417494*
51X8758	GARLK	**417020***
51X876	GARLK	50075=
51X877	GARLK	50191*
51X8775	GARLK	**417298***
51X8778	GARLK	416163*
51X878	GARLK	50191*
51X8780	GARLK	**415991**
51X8780	GARLK	455146!
51X8787	GARLK	**415259!***
51X879	GARLK	50191
51X8790	GARLK	**473441***
51X8797	GARLK	**413247!**
51X8819	GARLK	**455406!***
51X8824	GARLK	**417254***
51X8825	GARLK	**416891!***
51X8828	GARLK	**455462***
51X8830	GARLK	**415559***
51X8833	GARLK	**416664!**
51X8836	GARLK	**417171!***
51X8845	GARLK	**417541***
51X8846	GARLK	417547*
51X8847	GARLK	417497*
51X8848	GARLK	**410987!***
51X8856	GARLK	417537*
51X886	GARLK	50081*
51X8864	GARLK	**418028**
51X8864	GARLK	455137!
51X8868	GARLK	**417605***
51X887	GARLK	50081*
51X8870	GARLK	**415683***
51X8875	GARLK	50327*
51X8879	GARLK	**450593!**
51X888	GARLK	50081*
51X8881	GARLK	416556!
51X8881	GARLK	**472157**
51X8886	GARLK	**470596***
51X8887	GARLK	**471413**
51X8903	GARLK	**417191**
51X8903	GARLK	456585
51X8904	GARLK	**416107!**
51X8904	GARLK	455073
51X8907	GARLK	**415045!***
51X8912	GARLK	**417542***
51X8917	GARLK	**415090***
51X895	GARLK	470086*
51X897	GARLK	470086
51X9009	GARLK	**471688***
51X9013	GARLK	**352541***
51X917	GARLK	**473447***
51X920	GARLK	**470334!**
51X920	GARLK	50289
51X929	GARLK	**471984***
51X932	GARLK	**473313**
51X941	GARLK	50266*
51X942	GARLK	50266
51X944	GARLK	450269*
51X945	GARLK	450269
51X947	GARLK	450285*
51X948	GARLK	450285
51X950	GARLK	**471866!***
51X9501	GARLK	**330385!**
51X9515	GARLK	**471267!***
51X958	GARLK	**473448***
51X959	GARLK	**473448***
51X960	GARLK	**473448**
51X961	GARLK	**471984***
51X962	GARLK	**471984***
51X963	GARLK	**471984**
51X964	GARLK	**473313**
51X965	GARLK	**473313**
51X966	GARLK	**473313**
51X977	GARLK	**472070***
51X980	GARLK	**471866!**
51X981	GARLK	**471866!**
51X983	GARLK	**473449**
51X987	GARLK	480281!
51X992	GARLK	**473450**
51X993	GARLK	**473450**
5200	SEALD	5200
52006	GARLK	**471424!**
52007658	CHRYS	4739*
52007661	CHRYS	4740
5201	SEALD	5201
520104	C-R	**473179**
52018H	IH	5M867
5202	SEALD	5202
520226	NATL	**470590**
52023	GARLK	**472492!**
520269	FULLE	**472164**
520280	AVCO	240356
520280	CONTI	240356
520280	HERCU	240356
520282	GMC	9613S
5202OSR	JN-MN	**474265**
5203	SEALD	5203
520317	CLARK	7412S
5203465	CHRYS	3655
52035	GARLK	**472924!**
5203590	CHRYS	710056
5203603	CLARK	**473232!**
5203611	CLARK	**416339**
5203613	CLARK	**417538**
5203614	CLARK	**455566**
5203618	CLARK	**417551**
5203620	CLARK	**470898**
5203645	CLARK	**415938**
5203648	CLARK	**415035!**
5203649	CLARK	**417546!**
5203651	CLARK	**472016!**
5203655	CLARK	455290
5203661	CLARK	**416956**
5203683	CLARK	**470625!**
5203686	CLARK	**415027**
5203687	CLARK	**471466!**
5203688	CLARK	**416624!**
5203689	CLARK	**415085!**
5203692	CLARK	**471138!**
5203693	CLARK	**417343!**
5203695	CLARK	**473237!**
5203696	CLARK	**470954!**
5203699	CLARK	**472015!**
5203703	CLARK	472020
5203902	CLARK	5971
5203903	CLARK	**412040**
5204	SEALD	5204
520402	CONTI	**473211!**
520428	CONTI	**415458!**
5204620	CLARK	**415559**
5204633	CLARK	**470354**
5204691	CLARK	**415294!**
5204LA	JN-MN	**474256**
5204LPD	JN-MN	**474256**
5205591	CHRYS	3459
52056	GARLK	**472397!**
520571	C-R	8705S
5205717	CLARK	**473224!**
520585	C-R	8549S
5205865	CLARK	5965
5205963	CLARK	**412040**
5205B	JN-MN	**416404!***
5206	SEALD	5206
5206032	CLARK	**473440**
5206279	CLARK	**472572!**
5206513	CLARK	**415449!**
5206542	CLARK	**415449!**
52066	NATL	**484058**
5206673	CLARK	**470954!**
52067595	CHRYS	**473235**
52067596	CHRYS	5126
520687	UNIVE	**417556**
520688	MICH	**417556**
5207	SEALD	5207
520709	CONTI	50199S!
520709	CONTI	6863S!
52071	GARLK	**473242**
520737	C-R	**472397!**
520777	CONTI	**473473**
5208359	CLARK	J1122
5208A	C-R	5957S
5208J	OSHKO	**417351!**
5209514	CLARK	**470605!**
521	C-R	5M81
5210	DICO	203005!
5210	DICO	205005
521012	CONTI	**474278!**
521025	C-R	9584
521026	C-R	415983N!
521050	C-R	6864S
521162	C-R	370015A
521192	CONTI	**471554!**
5211B	JN-MN	**470682***
52120	TROS	40438S
5212535	CHRYS	5604
5212536	CHRYS	5604
521262	C-R	7687S
521263	C-R	9178S
521265	C-R	9195S=
5212B	JN-MN	**471736**
5212LUP	JN-MN	**471736**
521316	C-R	9339S
521317	CONTI	**417344!**
5213271	VICK	**470712!**
521351	CONTI	**417191**
521351	CONTI	455165!
521371	ALLCH	**472185!**
521430	C-R	487945
521473	C-R	443527=
5214OSR	JN-MN	**415035**
5214OSR	JN-MN	**415035!**
521507	C-R	**416892!**
521520	C-R	416556!
521520	C-R	**472157**
521522	C-R	**472157!**
521522	C-R	**472157**
521523	C-R	416556!
521523	C-R	**472157**
521566	C-R	**411245!**
521568	C-R	**411500**
52159	GARLK	**473204**
521627	C-R	**416404!**
52164282	IG-RA	**416153!**
521683	C-R	**417621!**
521684	C-R	**416404!**
521686	C-R	**417621!**
521697	C-R	**417210!**
521703	C-R	**417366!**
52171	GARLK	**470898**
5217B	JN-MN	**415483!**
521810	C-R	415871
521835	C-R	**417158!**
521836	C-R	**417344!**
521837	C-R	**416921!**
521841	C-R	**416921!**
521842	C-R	**417344!**
521844	C-R	**416921!**
52186	GARLK	**472015!**
521883	ALLCH	**450765!**
521915	C-R	**415958**
521915	C-R	**415958!**
521924	C-R	**474276**
521925	CONTI	**474260**
52198	GARLK	**472016!**
5220	C-R	13X26X7
522010	C-R	**416345!**
522068	ADAMS	**411253!**
5221	C-R	13X26X7
52210	GARLK	**473243**
522104	C-R	**416404!**
522107	C-R	**417621**
522108	C-R	**417621**
522146	ADAMS	**471554!**
5221LA	JN-MN	**450307**
522241	CONTI	**474255**
5222798	CHRYS	3816*
5222SS	JN-MN	**471354!***
522309	WOOL	**417205!**
522433	C-R	5778
522434	C-R	6808N
522467	CONTI	**471442!**
5224B	JN-MN	**450593!**
52257	ALLCH	**416865!**
522574	C-R	3604
52260	TROS	**471787!**
522631	C-R	**417487**
522678	ADAMS	**471341!**
52273	TROS	6547
522825	C-R	**473473**
522826	C-R	9363S
522827	C-R	9161
522849	C-R	**416273**
522887	ADAMS	**473464**
522887	LETN	410059
522887	LETN	**470380!**
5228B	JN-MN	55239*=
522958	ADAMS	**472015!**
522958	LETN	**472015!**
522959	ADAMS	**455655!**
522959	WABCO	**455655!**
522D6	DIA	5403
522D6	WHITE	5403
5230	C-R	13X27X7
5230	NATL	**415937**
5230007	GMC	**471526!**
523027R91	IH	204008

! Industrial Size/Type * Minor Width Difference

= The U.S. customer service number is 877-4-TIMKEN. The Canadian customer service numbers are 800-565-4927 (English) and 800-565-0438 (French-Canadian).

Mfr. No.	Name	Zero Duplication or Recommended Industrial
52303	*GARLK*	**471272**!
523037	*C-R*	**415991**
523037	*C-R*	**415991**!
523047	*ADAMS*	**473214**!
523047	*LETN*	**473214**
523061	*ADAMS*	**472924**!
523061	*LETN*	**472924**!
523088	*ADAMS*	**415984**!
5231	*NATL*	2297
5231	*NATL*	39807
52317	*GARLK*	**471138**!
523192	*ADAMS*	**471224**!
5232	*NATL*	39723
52329	*GARLK*	**472636**!
5233	*NATL*	39705
523325R91	*IH*	40101S
523376	*C-R*	450285
5234	*NATL*	39701
52341	*GARLK*	**412920**!
52348D	*IH*	**412473**!
5234LA	*JN-MN*	**471192**
523620	*CONTI*	**471270**!
523646	*C-R*	2043
523675	*C-R*	**416070**
523700	*ADAMS*	**471192**
523700	*LETN*	**471192**
5237486	*GMC*	**473467**
523763	*C-R*	8750S
5239SS	*JN-MN*	**471281**!*
523D6	*WHITE*	5401
5240542	*CHRYS*	3476
5240692	*CHRYS*	25598
524096	*ONAN*	6489
5240B	*JN-MN*	55441*=
5241	*DIVCO*	**473179**
524109	*CONTI*	**471692**!
524207	*C-R*	**413246**
52422	*GARLK*	**470565**!
52424	*C-R*	**415294**!
524314	*C-R*	**455471**
524316	*C-R*	**415559**
524322	*C-R*	416670
524324	*C-R*	**415150**!
524326	*C-R*	**455189**
524328	*C-R*	**417366**!
524330	*C-R*	**455191**
52434	*C-R*	**415394***
52434	*GARLK*	**413246**
52436008.5	*TROS*	370008A
52438	*C-R*	455328*
5244	*C-R*	**417357**
5244	*C-R*	455192!
52440008	*TROS*	370015A
524416	*C-R*	**327303**!
52441608	*TROS*	**415196**!
52442	*C-R*	55193*=
52444	*C-R*	**415142***
52444Q6	*C-R*	**415142***
52445	*C-R*	**417262**!
52445	*C-R*	**417262***
52446	*C-R*	**455194***
52446	*GARLK*	**413247**!
52447	*C-R*	**417262**=
52447M1	*C-R*	**472157**
52447M1	*C-R*	**472157**!
52448	*C-R*	**472157**!
52448	*C-R*	**472157**
52448M1	*C-R*	**472157**!
52448M1	*C-R*	**472157**
524496	*C-R*	2146
52450	*C-R*	**417262**!
52451	*C-R*	**417262**!
524569	*LETN*	**415995**!
524569	*LETN*	**415995**!
52457	*C-R*	**417262**!
52458	*C-R*	**417262**!
52459	*C-R*	**417262**!
52461	*GARLK*	**416271**!
5246314	*SPICE*	**473228**
5246315	*SPICE*	**415449**!
5246316	*SPICE*	**472258**
5246317	*SPICE*	240319
5246318	*SPICE*	**416921**!
5246319	*SPICE*	**472258**
5246320	*SPICE*	240319
5246326	*SPICE*	455402=
5246328	*SPICE*	**472560N**
524634	*C-R*	204027
5247	*NATL*	**417621**
524700	*MICH*	**416666**
524700	*UNIVE*	**416666**
52475	*C-R*	447060
52479D	*IH*	**472070**
52480	*C-R*	**417262**!
524803	*C-R*	6649
52484	*C-R*	**417358**
52485	*C-R*	**417358**
52486	*C-R*	**417358**
52487	*C-R*	**417358**
52488	*C-R*	**415645**!*
5248B	*JN-MN*	**473420***
5249	*SPG*	5071
52490	*C-R*	**415645**!
52490	*C-R*	455104
52491	*C-R*	**415645**!
52491	*C-R*	455104
52494	*C-R*	**415645**!
52494	*C-R*	455104
52495	*C-R*	**415645**!
52496	*C-R*	**415645**!
52496	*C-R*	455104
524965	*C-R*	5401
524966	*C-R*	5487
52497	*C-R*	**415645**!
52499	*C-R*	**415645**!
52499	*C-R*	455104
524B41608	*TROS*	**415196**!
524D6	*DIA*	5405
524D6	*WHITE*	5405
524E44	*C-R*	**415142**
524H326	*C-R*	**455189***
524N316-T8	*C-R*	6612S*
5250	*C-R*	13X28X7!
52500	*C-R*	**415645**!
525085	*C-R*	5131
5252053	*CHRYS*	223253
5252499	*CHRYS*	8660S
525252	*C-R*	**473367***
525252	*C-R*	**473367**
525252	*C-R*	**473367**
525314	*C-R*	**455471**
525316	*C-R*	**415559**
525324	*C-R*	**415150**!*
525324	*MINMA*	**415150**!
525324M1	*C-R*	**415150**!*
525326	*C-R*	**455189***
525328	*C-R*	**417366**!*
525328M1	*C-R*	**417366**!*
525330	*C-R*	**455191***
525330M1	*C-R*	**455191***
52534	*C-R*	**415394***
52536	*GARLK*	**471271**!
52538	*C-R*	455328*
5254	*C-R*	13X28X7!
52542	*C-R*	55193*=
52544	*C-R*	**415142***
52544	*MARI*	**415142**
52544M1	*C-R*	**415142***
52544Q6	*C-R*	**415142***
52546	*C-R*	**455194***
52546M1	*C-R*	**455194***
52547	*C-R*	**472157**!
52547	*C-R*	**472157**
52548	*C-R*	**472157**!
52548	*C-R*	**472157**
52548	*GARLK*	**470605**!
52548M1	*C-R*	416556!
52548M1	*C-R*	**472157**
5254SH	*JN-MN*	**472560N***
5254SS	*JN-MN*	**472560N**!
52551	*GARLK*	**415449**!
52557	*GARLK*	**415449**!
5256	*SKIL*	**471264**
525606	*ALLCH*	**472311**!
525629	*C-R*	**415937**
52569	*GARLK*	**416273**
5256B	*JN-MN*	**412920**!
5257169	*GMC*	**455858**
5257224	*GMC*	5487
5257225	*GMC*	**455858**
52573	*HYST*	**473227**!
5257B	*JN-MN*	**417350**!
5258	*SPG*	5001
52583	*OLIVE*	353132
5259	*ROTO*	**471466**!
525978	*ALLCH*	**411253**!
525F48	*C-R*	416556!
525F48	*C-R*	**472157**
525H	*CHRYS*	**473426**
525H	*DURA*	**473426**
525H48-T8	*C-R*	**472157***
5260939	*CLARK*	**415036**
5260F	*GOODM*	**415294**!
52617	*GARLK*	**413248**
526199	*ALLCH*	204008
52623	*HYST*	40337S
52625TA	*TRSCM*	**417262**!
5263	*SPG*	5422
52632	*C-R*	417359
52632	*GARLK*	**415483**
52633	*C-R*	417359
52633	*WAYNE*	**415041**
52634	*C-R*	417359
52635	*C-R*	417359
5264	*SPG*	5424
52644	*GARLK*	**415458**!
52648	*C-R*	**417549**!
526497	*C-R*	**471271**!
526499	*C-R*	**417484**
5264G	*GOODM*	**416229**
52650	*C-R*	**417549**!
52656	*GARLK*	**417343**!
52658	*C-R*	370069A
5265B	*JN-MN*	**415021***
52660	*C-R*	370069A
52664	*C-R*	370069A
52675TA	*TRSCM*	**417549**!
52683	*GARLK*	**416664**!
52689	*GARLK*	**415984**!
5269	*ROTO*	**473464**
5269	*ROTO*	**473464**!
52698	*GARLK*	**415984**!
5269LPD	*JN-MN*	**471744**!*
5270SS	*JN-MN*	**471103**!
52710	*GARLK*	**417316**!
527176	*C-R*	370023A
52719	*GARLK*	**415960**
5271SS	*JN-MN*	**472258**!
52721	*TROS*	5596=
527302	*CLARK*	**417562**
5273B	*JN-MN*	417780*
527418	*C-R*	7214
52753HA	*IH*	5957S
5276	*TMTR*	**473215**!
527677	*C-R*	5121
5276LA	*JN-MN*	**471391**!
52770	*GARLK*	**415303**!
527739R91	*IH*	**473225**
52782	*GARLK*	**417344**!
527870	*C-R*	712625
5278LA	*JN-MN*	**416167**!
52791	*GARLK*	**417158**!
52797	*MASTE*	**471570**!
527H2	*WHITE*	**473367**!
527H2	*WHITE*	**473367**
528	*C-R*	5M89
5280	*C-R*	13X30X7!
528010A	*HARWA*	52X80X10
5280B	*JN-MN*	**55301S***
52812	*GARLK*	**416921**!
528367	*C-R*	370021A
528370	*C-R*	370019A
52852	*MASTE*	**450133**
52852	*RELEE*	**450133**
528576	*ACF*	**471264**
52869D	*IH*	**415995**!
52869D	*IH*	**415995**!
528712	*UNIVE*	**416476**!
528713	*MICH*	**416476**!
5289	*ROTO*	450415
528920	*C-R*	**471224**!
528942	*C-R*	370065A%
528942	*C-R*	376590A>
528955	*C-R*	9316
52896HA	*IH*	5871
52896HAX	*IH*	5871
52896HX	*IH*	5871
528977	*C-R*	**470954**!
529023	*ALLCH*	**412473**!
529029	*ALLCH*	**472354**!
529046	*ALLCH*	**471737**
529057	*ALLCH*	**470954**!
529192	*C-R*	**472015**
5291LA	*JN-MN*	416102
5291LUP	*JN-MN*	416102
529266	*C-R*	3385
5292722	*CLARK*	**415559**
5292736	*CLARK*	472020
5292SS	*JN-MN*	**471539**!
52931D	*IH*	**450048**
52940S	*TROS*	**473367**!
52940S	*TROS*	**473367**
529443R91	*IH*	**471442**!
529466R91	*IH*	**417698**
529484	*WHITE*	**417344**!
529485	*WHITE*	J1119
5294B	*JN-MN*	**417520***
5295B	*JN-MN*	**416892**!*
529684R1	*IH*	472129=
529684R91	*IH*	472129=
5296B	*JN-MN*	**417273**
5297073	*CLARK*	**417496**
52975D	*IH*	**474265**
5297SH	*JN-MN*	417267
5298SS	*JN-MN*	**470712**!
52D3	*WHITE*	**471442**!
52X17925A	*JOHND*	240435
52X65X9SC	*TRSCM*	52X65X9!

! Industrial Size/Type * Minor Width Difference > Hub Mount % Spindle Mount
= The U.S. customer service number is 877-4-TIMKEN. The Canadian customer service numbers are 800-565-4927 (English) and 800-565-0438 (French-Canadian).

Mfr. No.	Name	Zero Duplication or Recommended Industrial
52X65X9TC	*TRSCM*	52X65X9!
52X68X8SC	*TRSCM*	52X68X8!
52X68X8TC	*TRSCM*	52X68X8!
52X69X10SC	*TRSCM*	52X69X10
52X69X10TC	*TRSCM*	52X69X10
52X70X8SC	*TRSCM*	52X70X8!
52X70X8TC	*TRSCM*	52X70X8!
52X72X8SC	*TRSCM*	52X72X8!
52X72X8TC	*TRSCM*	52X72X8!
52X75X12SC	*TRSCM*	52X75X12
52X75X12TC	*TRSCM*	52X75X12
52X80X10	*SIMRT*	52X80X10
52X80X10SC	*TRSCM*	52X80X10
52X80X10TC	*TRSCM*	52X80X10
52X82X8SC	*TRSCM*	52X82X8
52X82X8TC	*TRSCM*	52X82X8
52X85X8AN	*ISP*	52X85X7*
53	*UNIVE*	**471553**!
530000	*GEHL*	**472439**
53000237	*CHRYS*	4019N
53000239	*AMC*	470547
530003	*GEHL*	**473016**!
53000476	*CHRYS*	**473212**!
530006	*GEHL*	**471138**!
530008	*GEHL*	**471276**
530009	*GEHL*	291099
530012	*GEHL*	**471760**
530013	*GEHL*	240319
530014	*GEHL*	**481163**!
530016	*GEHL*	**473225**!
530017	*GEHL*	**472924**!
530019	*GEHL*	**473454**
530021	*GEHL*	**474278**!
530022	*GEHL*	**471272**!
5300241	*EATON*	J1126
53002642	*AMC*	**473452**
5300331	*EATON*	J1136
5300381	*EATON*	**415725**!
530038100	*EATON*	**415725**!
53005629	*CHRYS*	713103
53005630	*CHRYS*	713103
53005837	*CHRYS*	328039
530060	*CHRYS*	**473471**
53009	*GARLK*	**417349**!
530102R91	*IH*	**416664**!
53011	*IPS*	1012
53011	*IPS*	1012N
53011	*IPS*	45X62X8!
53013D	*IH*	**415379**
530165	*CHRYS*	**415449**!
5301691	*EATON*	**471255**!
53018	*GARLK*	**417350**!
53020488	*CHRYS*	713103
53021103	*CHRYS*	328039
53024	*IPS*	1174
53024	*IPS*	38X52X8.5!
53027	*IPS*	1973
53027	*IPS*	48X65X10!
530289	*CONTI*	**451583**!
530307	*C-R*	712375
530309	*C-R*	712937
5303144	*GMC*	**471466**!
53032	*ALLCH*	**415960**!
530329D	*SPG*	712132
53033	*GARLK*	**415995**!
53033	*GARLK*	**415995**!
5303625	*CLARK*	**412473**!
5303635	*CLARK*	**471424**!
5303655	*CLARK*	455290
530370	*FRUEH*	370065A
530370	*FRUEH*	376590A
53042	*GARLK*	**417351**!
530475	*ALLCH*	**472193**!
530480	*FRUEH*	370065A
530480	*FRUEH*	376590A
530488	*CHRYS*	**473464**!
530488	*CHRYS*	**473464**
530489	*CHRYS*	**411253**!
530507	*C-R*	6283S
530520	*CONTI*	**330385**
530573	*AVANT*	40769S
53058	*IPS*	1012
53058	*IPS*	1012N
53058	*IPS*	45X62X8!
5305SS	*JN-MN*	**471529**
530607	*C-R*	200855
5307SS	*JN-MN*	**471652**
530806R91	*IH*	**472018**=
530859	*CONTI*	**416956**
530875	*C-R*	8998
53088	*IPS*	225230
53088	*IPS*	52X72X8!
53089	*IPS*	225420
53089	*IPS*	54X72X10!
53091	*IPS*	225110
53091	*IPS*	51X65X7!
53094	*IPS*	224820
53094	*IPS*	48X62X8!
53096	*IPS*	226285
53096	*IPS*	62X85X8!
530969R91	*IH*	**473367**
53102	*IPS*	224045
53102	*IPS*	40X62X12!
53102	*TROS*	7934S
53102S	*TROS*	7934S
53104	*GARLK*	**417621**!
53106	*IPS*	1174
53106	*IPS*	38X52X8.5!
531094	*C-R*	**416444**
531098	*C-R*	**470596**
53114	*IPS*	224835
53114	*IPS*	48X68X10!
53119	*IPS*	224045
53119	*IPS*	40X62X12!
53120	*IPS*	225010
53120	*IPS*	50X65X8!
531240	*C-R*	**474274**
531284	*C-R*	715101
53135	*C-R*	135X160X13
531378	*CONTI*	**471526**!
531379	*CONTI*	**450188**
5313OSR	*JN-MN*	**416332**!
53140	*C-R*	135X160X13
53143	*GARLK*	**417171**!
531488	*C-R*	**450474**
5314B	*JN-MN*	**416167**!
53150	*C-R*	**417550**
53151	*C-R*	**417550**
53160	*TROS*	1070=
531690569	*CHALL*	**415995**!
531756	*C-R*	710043
531813	*CHRYS*	**415988**
5318LA	*JN-MN*	470059
5318LA	*JN-MN*	**470380**!
5319970147	*DETRO*	917117
5320B	*JN-MN*	**471391**!
532101	*BENDI*	**350435**
5321B	*JN-MN*	**472319***
53220	*TROS*	**416297**
53221	*TROS*	**415960**
53222	*TROS*	**415857**!
5322B	*JN-MN*	**416167**!
53232009	*TROS*	455612=
53234409	*TROS*	417502
53236	*GARLK*	**417181**!
53236009	*TROS*	**417506**
53240009	*TROS*	**415036**
53240310	*TROS*	**417505**
53240409	*TROS*	455037
532404X09	*TROS*	**417506**
53241010	*TROS*	9128S
53241609	*TROS*	**416891**!
53243208	*TROS*	**416888**!
53243209	*TROS*	**416888**!
53243210	*TROS*	**416888**!
532467	*CONTI*	**471341**!
532471	*CONTI*	**471529**
532489	*CONTI*	**476838**!
532496	*C-R*	3909
5324SH	*JN-MN*	40208*
5324SS	*JN-MN*	**472324**!
5325	*SPG*	6077
532506	*CONTI*	**471647**
532508	*CONTI*	**471571**
532509	*C-R*	370003A
532509	*C-R*	380003A
532510	*CONTI*	**471551**!
532534	*CONTI*	**474253**!
53262	*TROS*	1091=
532663	*WHITE*	455022
532664	*WHITE*	**418028**
532664	*WHITE*	455137!
532665	*COC*	**416339**
532665	*COC*	455031!
532665	*WHITE*	**416339**
532665	*WHITE*	455031!
53275	*GARLK*	**417353**!
5329	*SPG*	6465
532957	*C-R*	340872
532990	*CONTI*	**472354**!
532GC220A	*MACK*	5645$
5331	*SPG*	**473229**
533161	*ONAN*	6403=
53320	*TROS*	415060
53320	*TROS*	455060
533225	*CONTI*	**473441**
533226	*CONTI*	**417474**
53326D	*IH*	**472016**
5333	*C-R*	**471530***
53338DA	*IH*	210914
5334	*C-R*	**471530***
53346	*GARLK*	**416294**!
5335	*LAU*	**471570**!
53358DA	*IH*	210945
5336	*SPG*	**473179**
53364	*GARLK*	**412473**!
53366	*NATL*	**472409**
53370	*C-R*	**417554**!
53379	*GARLK*	**417191**
5338	*C-R*	**471530**
5338	*NATL*	5095
5339	*C-R*	**471530**
53394	*GARLK*	**417354**!
53395HX	*IH*	5957S
5340B	*JN-MN*	455290*
5344R	*JN-MN*	**416071**
5345B	*JN-MN*	**417350**!
53460	*GARLK*	**416624**!
53461	*HYST*	**472164**!
5347	*C-R*	**471530**
534798	*CONTI*	**471539**!
534938	*CONTI*	**450588**!
534939	*CATER*	J1117
534956	*CONTI*	**471538**!
534957	*CONTI*	**471538**!
53499	*GARLK*	**417196**!
53502S	*TROS*	**473179**
53503	*TROS*	**472164**!
535065	*CATER*	J1121
5351	*UNIVE*	370021A
5351142	*AMC*	472635
535121	*ALLCH*	**412871**!
5351OS	*JN-MN*	**476470**
5352	*C-R*	481534
535208R91	*IH*	**471413**=
535208R92	*IH*	**471413**!
535209R91	*IH*	**471424**!
535209R92	*IH*	**471424**!
5352171	*AMC*	442380
5352609	*AMC*	**471271**!
5352786	*AMC*	**417480**!
535320	*C-R*	415832
535330	*C-R*	**415263**
53548	*C-R*	**415196**!
535554	*CONTI*	**471692**!
53562	*TROS*	2551
5356675	*AMC*	442874
535667R91	*IH*	477055
535674	*FRUEH*	**455260**
53568	*GARLK*	**416332**!
5358	*SPG*	5095
535806	*GMC*	**471193**
5358980	*AMC*	482267
5359457	*AMC*	3173
5359457	*AMC*	710928
53596HB	*IH*	**412871**!
5359703	*AMC*	**471271**!
53601	*GARLK*	**417355**!
53613	*GARLK*	**416125**!
536144R91	*IH*	**413246**
5362	*SPG*	5201
536282	*ALLCH*	**473231**!
5363	*SPG*	5200
53634D	*IH*	**473467**!
5363713	*GMC*	**470605**!
53640S	*TROS*	6636S
53646	*GARLK*	416041
53646	*HYST*	**415725**!
5365082	*AMC*	3945
5365G	*GOODM*	**417298**
53660	*TROS*	**472164**!
53667	*GARLK*	**417205**!
53675TA	*TRSCM*	**417554**!
536778	*CHRYS*	**415960**!
536810A	*HARWA*	53X68X10
53688	*C-R*	**417551**
53690	*C-R*	**417551**
53692	*C-R*	**455576**!
53693	*C-R*	**455576**!
53695	*C-R*	**455576**!
5369970047	*DETRO*	100294
536D4	*WHITE*	**415001**!
5370	*SPG*	5370
53701	*C-R*	**415938***
53715V	*IH*	**415458**
5371B	*JN-MN*	**471652***
53721	*GARLK*	**417211**!
53732	*MASTE*	**417172**
53733	*GARLK*	**416345**!
537330	*C-R*	**415263***
537330M1	*C-R*	**415263***
5373B	*JN-MN*	**415035**
5373B	*JN-MN*	**415035**!
5374	*C-R*	**416130**!*
53740	*C-R*	**415938**
53745	*GARLK*	**415697**!
53748	*C-R*	**415196**!*
53748M1	*C-R*	**415196**!*

! Industrial Size/Type * Minor Width Difference $ F-M Number Is Part Of A Kit

= The U.S. customer service number is 877-4-TIMKEN. The Canadian customer service numbers are 800-565-4927 (English) and 800-565-0438 (French-Canadian).

Mfr. No.	Name	Zero Duplication or Recommended Industrial
5374B	JN-MN	417511
5375R	JN-MN	472492!
53763	GARLK	417366!
53763	HYST	6872S
53764	HYST	6481S
537696	ALLCH	350936
5377	FULLE	415995!
53770D	IH	415995!
53770D	IH	415995!
53775	C-R	417554!
53790	C-R	3292
53799	C-R	416112
53806D	IH	415437
5381-26-157	VILA	710150
53825	HYST	410308!
53825	HYST	473468
538283	GE	471466
5384	SPG	7154S
5385	SPG	6649
538555-55	C-R	712000
5386	SPG	223035
5386LA	JN-MN	55301S*
53872D	IH	410708
53888D	IH	472924!
538948	CONTI	471442!
538983R1	IH	2093H=
5389LA	JN-MN	471413!*
5389LUP	JN-MN	471413!
538W330	C-R	6270
53902	HYST	455858
53912	HYST	473459
539161	GMC	291295
539226	CONTI	471341!
53925	HYST	470898
539421	GMC	471193
5394B	JN-MN	473215!
53967D	IH	473215!
53968D	IH	473228
5399	C-R	471281
53H027	SHOV	472397!
53H039	SHOV	474276!
53R012	SHOV	415001!
53W005	SHOV	415007
53X2174	GARLK	415995!
53X2174	GARLK	415995!
53X2177	GARLK	417351!
53X2178	GARLK	417351!
53X2180	GARLK	417487!
53X2180	GARLK	417487
53X2181	GARLK	417487
53X2182	GARLK	417487
53X2183	GARLK	417488!
53X2184	GARLK	417488!*
53X2185	GARLK	417488!
53X2186	GARLK	415088
53X2187	GARLK	415088
53X2187	GARLK	415088!
53X2188	GARLK	455019!
53X2189	GARLK	55548
53X2192	GARLK	416370!
53X2195	GARLK	455820*
53X2198	GARLK	455019!*
53X2199	GARLK	455019!*
53X2200	GARLK	455019!*
53X2201	GARLK	55155*=
53X2202	GARLK	55155=
53X2203	GARLK	55155*=
53X2204	GARLK	455015*
53X2205	GARLK	455015*
53X2206	GARLK	455015
53X2210	GARLK	55141*
53X2211	GARLK	55141*
53X2212	GARLK	55141*
53X2222	GARLK	455020*
53X2225	GARLK	417621!
53X2226	GARLK	417621!
53X2227	GARLK	417621!
53X2228	GARLK	416288!
53X2229	GARLK	416288!*
53X2230	GARLK	416288!*
53X2231	GARLK	417171!
53X2232	GARLK	417171!*
53X2233	GARLK	417171!
53X2234	GARLK	417172*
53X2235	GARLK	417172*
53X2236	GARLK	417172*
53X2237	GARLK	416297*
53X2246	GARLK	415021
53X2247	GARLK	415021*
53X2248	GARLK	415021*
53X2249	GARLK	456105*
53X2250	GARLK	456105*
53X2251	GARLK	456105
53X2252	GARLK	417490*
53X2253	GARLK	417490*
53X2254	GARLK	417490
53X2255	GARLK	455336*
53X2256	GARLK	455336*
53X2257	GARLK	455336*
53X2260	GARLK	6358
53X2261	GARLK	417490
53X2267	GARLK	455022*
53X2268	GARLK	455022*
53X2269	GARLK	455022*
53X2270	GARLK	476470
53X2271	GARLK	476470
53X2272	GARLK	476470
53X2273	GARLK	417181!
53X2274	GARLK	417181!*
53X2275	GARLK	417181!
53X2276	GARLK	418028
53X2277	GARLK	418028
53X2277	GARLK	455137!
53X2278	GARLK	418028
53X2278	GARLK	455137!
53X2279	GARLK	417353!
53X2280	GARLK	417353!*
53X2281	GARLK	417353!*
53X2282	GARLK	456305
53X2284	GARLK	416865!
53X2288	GARLK	415023
53X2289	GARLK	415023
53X2290	GARLK	415023
53X2294	GARLK	455328*
53X2295	GARLK	455328*
53X2296	GARLK	455328*
53X2298	GARLK	417491*
53X2299	GARLK	417491
53X2300	GARLK	415085!
53X2300	GARLK	456648
53X2306	GARLK	416313
53X2307	GARLK	416313*
53X2308	GARLK	416313
53X2312	GARLK	455024
53X2313	GARLK	455024*
53X2314	GARLK	455024*
53X2321	GARLK	412473!
53X2322	GARLK	412473!
53X2323	GARLK	412473!
53X2324	GARLK	417191
53X2324	GARLK	455165!
53X2325	GARLK	417191
53X2325	GARLK	455165!
53X2326	GARLK	417191
53X2326	GARLK	455165!
53X2327	GARLK	417354!*
53X2328	GARLK	417354!*
53X2329	GARLK	417354!
53X2330	GARLK	416321
53X2336	GARLK	415025
53X2337	GARLK	415025*
53X2338	GARLK	415025*
53X2342	GARLK	416327
53X2345	GARLK	417492*
53X2346	GARLK	417492*
53X2347	GARLK	417492
53X2348	GARLK	417493*
53X2349	GARLK	417493*
53X2350	GARLK	417493
53X2354	GARLK	417494*
53X2355	GARLK	417494*
53X2356	GARLK	417494
53X2357	GARLK	455026*
53X2358	GARLK	455026*
53X2359	GARLK	455026*
53X2363	GARLK	455471*
53X2364	GARLK	455471*
53X2365	GARLK	455471*
53X2366	GARLK	415991
53X2366	GARLK	455146!
53X2367	GARLK	415991
53X2367	GARLK	455146!
53X2368	GARLK	415991
53X2368	GARLK	455146!
53X2369	GARLK	417196!*
53X2370	GARLK	417196!*
53X2371	GARLK	417196!
53X2372	GARLK	415437
53X2373	GARLK	415437
53X2373	GARLK	415437!
53X2374	GARLK	415437
53X2374	GARLK	415437!
53X2375	GARLK	417198*
53X2376	GARLK	417198*
53X2377	GARLK	417198
53X2378	GARLK	415027
53X2379	GARLK	415027!
53X2379	GARLK	415027
53X2380	GARLK	415027
53X2381	GARLK	417495*
53X2382	GARLK	417495*
53X2383	GARLK	417495
53X2384	GARLK	415559*
53X2385	GARLK	415559*
53X2386	GARLK	415559*
53X2390	GARLK	417496*
53X2391	GARLK	417496
53X2392	GARLK	417496*
53X2393	GARLK	415711*
53X2394	GARLK	415711*
53X2395	GARLK	415711
53X2396	GARLK	417497*
53X2397	GARLK	417497*
53X2398	GARLK	417497
53X2399	GARLK	417498*
53X2400	GARLK	417498*
53X2401	GARLK	417498
53X2402	GARLK	55028*
53X2417	GARLK	416332!
53X2418	GARLK	416332!
53X2419	GARLK	416332!
53X2420	GARLK	415937!
53X2421	GARLK	415937!
53X2422	GARLK	415937!
53X2423	GARLK	417355!
53X2424	GARLK	417355!*
53X2425	GARLK	417355!
53X2426	GARLK	416125!
53X2427	GARLK	416125!*
53X2428	GARLK	416125!*
53X2432	GARLK	417499
53X2435	GARLK	415832
53X2441	GARLK	417501*
53X2442	GARLK	417501*
53X2443	GARLK	417501
53X2447	GARLK	55030*
53X2448	GARLK	55030*
53X2449	GARLK	55030*
53X2450	GARLK	55646=
53X2453	GARLK	416670*
53X2454	GARLK	416670*
53X2455	GARLK	416670*
53X2459	GARLK	417502*
53X2462	GARLK	415379
53X2462	GARLK	415379!
53X2463	GARLK	415379
53X2464	GARLK	415379!
53X2464	GARLK	415379
53X2465	GARLK	417205!
53X2466	GARLK	417205!*
53X2467	GARLK	417205!
53X2468	GARLK	416339
53X2469	GARLK	416339
53X2469	GARLK	455031!
53X2470	GARLK	416339*
53X2474	GARLK	415150!*
53X2475	GARLK	415150!*
53X2476	GARLK	415150!*
53X2477	GARLK	416127
53X2480	GARLK	417503*
53X2484	GARLK	417504*
53X2485	GARLK	417504
53X2486	GARLK	455032!*
53X2487	GARLK	455032!*
53X2488	GARLK	455032!*
53X2492	GARLK	455189*
53X2493	GARLK	455189*
53X2494	GARLK	455189*
53X2501	GARLK	417211!
53X2502	GARLK	417211!*
53X2503	GARLK	417211!
53X2504	GARLK	416345!
53X2505	GARLK	416345!
53X2505	GARLK	455033
53X2506	GARLK	416345!
53X2506	GARLK	455033
53X2507	GARLK	415697!
53X2507	GARLK	455547
53X2508	GARLK	415697!
53X2508	GARLK	455547
53X2509	GARLK	415697!
53X2509	GARLK	455547
53X2510	GARLK	417366!
53X2511	GARLK	417366!*
53X2512	GARLK	417366!*
53X2513	GARLK	415958
53X2513	GARLK	415958!
53X2516	GARLK	417505
53X2519	GARLK	415034!
53X2520	GARLK	415034!
53X2521	GARLK	476470!
53X2521	GARLK	476470
53X2525	GARLK	455191*
53X2527	GARLK	455191*
53X2528	GARLK	415263
53X2529	GARLK	415263*
53X2530	GARLK	415263*
53X2531	GARLK	417506*

! Industrial Size/Type * Minor Width Difference

= The U.S. customer service number is 877-4-TIMKEN. The Canadian customer service numbers are 800-565-4927 (English) and 800-565-0438 (French-Canadian).

Mfr. No.	Name	Zero Duplication or Recommended Industrial
53X2532	GARLK	**417506**
53X2533	GARLK	**417506***
53X2537	GARLK	**415035**
53X2538	GARLK	**415035**
53X2538	GARLK	**415035!**
53X2539	GARLK	**415035**
53X2540	GARLK	**417356!**
53X2540	GARLK	455188
53X2541	GARLK	**417356!**
53X2541	GARLK	455188
53X2542	GARLK	**417356!**
53X2542	GARLK	455188
53X2543	GARLK	**417357**
53X2543	GARLK	455192!
53X2544	GARLK	**417357**
53X2544	GARLK	455192!
53X2545	GARLK	**417357**
53X2546	GARLK	**416130!**
53X2547	GARLK	**416130!***
53X2548	GARLK	**416130!***
53X2549	GARLK	**415036***
53X2550	GARLK	**415036**
53X2551	GARLK	**415036***
53X2552	GARLK	**417507**
53X2552	GARLK	**417507!**
53X2553	GARLK	**417507**
53X2553	GARLK	**417507!**
53X2554	GARLK	**417507**
53X2554	GARLK	**417507!**
53X2555	GARLK	**415041***
53X2556	GARLK	**415041**
53X2557	GARLK	**415041***
53X2561	GARLK	**417509***
53X2562	GARLK	**417509***
53X2563	GARLK	**417509**
53X2567	GARLK	**417223***
53X2568	GARLK	**417223**
53X2569	GARLK	**417223***
53X2573	GARLK	55193*=
53X2574	GARLK	55193*=
53X2575	GARLK	55193*=
53X2579	GARLK	455037*
53X2580	GARLK	455037
53X2581	GARLK	455037*
53X2600	GARLK	**417511**
53X2601	GARLK	**417511***
53X2602	GARLK	**417511**
53X2603	GARLK	**415142***
53X2604	GARLK	**415142***
53X2605	GARLK	**415142***
53X2609	GARLK	**417512***
53X2610	GARLK	**417512**
53X2611	GARLK	**417512***
53X2615	GARLK	**415043***
53X2616	GARLK	**415043**
53X2617	GARLK	**415043***
53X2621	GARLK	455203*
53X2622	GARLK	455203*
53X2623	GARLK	455203
53X2627	GARLK	455056*
53X2628	GARLK	455056
53X2629	GARLK	455056*
53X2630	GARLK	**455194***
53X2631	GARLK	**455194***
53X2632	GARLK	**455194***
53X2636	GARLK	417513*
53X2637	GARLK	417513
53X2638	GARLK	417513*
53X2642	GARLK	**417514***
53X2643	GARLK	**417514**
53X2644	GARLK	**417514***
53X2648	GARLK	417515*
53X2654	GARLK	417516
53X2655	GARLK	417516
53X2656	GARLK	417516*
53X2657	GARLK	**472157!**
53X2657	GARLK	**472157**
53X2658	GARLK	**472157!**
53X2658	GARLK	**472157**
53X2659	GARLK	416556!
53X2659	GARLK	**472157**
53X2660	GARLK	**415196!**
53X2661	GARLK	**415196!***
53X2662	GARLK	**415196!***
53X2663	GARLK	**416891!**
53X2664	GARLK	**416891!**
53X2665	GARLK	**416891!***
53X2666	GARLK	**416135!**
53X2669	GARLK	**415045!***
53X2670	GARLK	**415045!**
53X2671	GARLK	**415045!***
53X2675	GARLK	**416137***
53X2676	GARLK	**416137***
53X2677	GARLK	**416137**
53X2678	GARLK	**417518***
53X2679	GARLK	**417518***
53X2680	GARLK	**417518**
53X2681	GARLK	**415058***
53X2682	GARLK	**415058**
53X2683	GARLK	**415058***
53X2684	GARLK	**456141**
53X2687	GARLK	455197N*
53X2688	GARLK	455197N
53X2689	GARLK	455197N*
53X2693	GARLK	**417520***
53X2694	GARLK	**417520**
53X2695	GARLK	**417520***
53X2699	GARLK	416144*
53X2700	GARLK	416144*
53X2701	GARLK	416144
53X2705	GARLK	**417238**
53X2708	GARLK	415425
53X2711	GARLK	**416380!**
53X2712	GARLK	**415196!**
53X2713	GARLK	**415196!***
53X2717	GARLK	**415047***
53X2718	GARLK	**415047**
53X2719	GARLK	**415047***
53X2723	GARLK	**416149***
53X2724	GARLK	**416149***
53X2725	GARLK	**416149**
53X2726	GARLK	417522
53X2729	GARLK	415060*
53X2729	GARLK	455060*
53X2730	GARLK	415060
53X2730	GARLK	455060
53X2731	GARLK	415060*
53X2731	GARLK	455060*
53X2732	GARLK	55199*=
53X2733	GARLK	55199=
53X2734	GARLK	55199*=
53X2738	GARLK	**417525***
53X2739	GARLK	**417525**
53X2740	GARLK	**417525***
53X2744	GARLK	417526*
53X2745	GARLK	417526*
53X2746	GARLK	417526
53X2750	GARLK	**415351!***
53X2751	GARLK	**415351!**
53X2752	GARLK	**415351!***
53X2753	GARLK	**416888!**
53X2754	GARLK	**416888!**
53X2755	GARLK	**416888!**
53X2756	GARLK	**416153!**
53X2757	GARLK	**416153!**
53X2758	GARLK	**416153!**
53X2759	GARLK	**416892!**
53X2760	GARLK	**416892!**
53X2761	GARLK	**416892!***
53X2762	GARLK	417531
53X2765	GARLK	**416154!***
53X2766	GARLK	**416154!***
53X2767	GARLK	**416154!**
53X2768	GARLK	**416070**
53X2769	GARLK	**416070**
53X2770	GARLK	**416070***
53X2771	GARLK	**415351!**
53X2772	GARLK	**415351!**
53X2773	GARLK	**415351!**
53X2774	GARLK	**417532***
53X2775	GARLK	**417532***
53X2776	GARLK	**417532**
53X2780	GARLK	**417533***
53X2781	GARLK	**417533**
53X2782	GARLK	**417533***
53X2786	GARLK	417534*
53X2787	GARLK	417534*
53X2788	GARLK	417534
53X2792	GARLK	457585*
53X2798	GARLK	**416156**
53X2799	GARLK	**416156**
53X2801	GARLK	**415371**
53X2802	GARLK	**415371**
53X2803	GARLK	**415371***
53X2804	GARLK	455685*
53X2805	GARLK	455685*
53X2806	GARLK	455685
53X2807	GARLK	**416158***
53X2808	GARLK	**416158***
53X2809	GARLK	**416158**
53X2813	GARLK	415064*
53X2814	GARLK	415064
53X2815	GARLK	415064*
53X2819	GARLK	**415284***
53X2820	GARLK	**415284**
53X2821	GARLK	**415284***
53X2825	GARLK	417535
53X2826	GARLK	417535*
53X2827	GARLK	417535
53X2831	GARLK	417536
53X2832	GARLK	417536
53X2833	GARLK	417536*
53X2834	GARLK	417537
53X2835	GARLK	417537*
53X2836	GARLK	417537
53X2837	GARLK	**415138!***
53X2838	GARLK	**415138!**
53X2839	GARLK	**415138!***
53X2840	GARLK	**417538***
53X2842	GARLK	**417538**
53X2843	GARLK	**417247!**
53X2844	GARLK	**417247!***
53X2845	GARLK	**417247!**
53X2846	GARLK	**417252***
53X2847	GARLK	**417252***
53X2848	GARLK	**417252**
53X2849	GARLK	**415066***
53X2850	GARLK	**415066**
53X2851	GARLK	**415066***
53X2858	GARLK	416163*
53X2859	GARLK	416163*
53X2860	GARLK	416163
53X2864	GARLK	456890
53X2865	GARLK	456890
53X2866	GARLK	456890
53X2873	GARLK	**416167!**
53X2874	GARLK	**416167!**
53X2875	GARLK	**416167!**
53X2876	GARLK	417267*
53X2877	GARLK	417267*
53X2878	GARLK	417267
53X2879	GARLK	**417269!**
53X2880	GARLK	**417269!**
53X2881	GARLK	**417269!**
53X2894	GARLK	**417539!***
53X2900	GARLK	**417273***
53X2901	GARLK	**417273**
53X2902	GARLK	**417273***
53X2903	GARLK	417540*
53X2904	GARLK	417540*
53X2905	GARLK	417540
53X2915	GARLK	**415725!**
53X2916	GARLK	**415725!***
53X2917	GARLK	**415725!**
53X2918	GARLK	417584*
53X2921	GARLK	**416865!**
53X2922	GARLK	**416865!**
53X2923	GARLK	**416865!**
53X2924	GARLK	**417278**
53X2926	GARLK	**417278**
53X2927	GARLK	**417541**
53X2928	GARLK	**417541***
53X2929	GARLK	**417541**
53X2933	GARLK	**417542***
53X2934	GARLK	**417542***
53X2935	GARLK	**417542**
53X2936	GARLK	417543*
53X2937	GARLK	417543*
53X2938	GARLK	417543
53X2941	GARLK	**417544**
53X2951	GARLK	**417545***
53X2960	GARLK	455290*
53X2961	GARLK	455290*
53X2962	GARLK	455290
53X2990	GARLK	**416557**
53X2992	GARLK	**416557**
53X2993	GARLK	**417258***
53X2996	GARLK	**417546!***
53X2997	GARLK	**417546!***
53X2998	GARLK	**417546!**
53X2999	GARLK	417547*
53X3000	GARLK	417547*
53X3001	GARLK	417547
53X3030	GARLK	417548
53X3032	GARLK	417548*
53X3033	GARLK	417548*
53X3034	GARLK	417548
53X3059	GARLK	**417262!**
53X3060	GARLK	**417262!**
53X3061	GARLK	**417262!**
53X3062	GARLK	**417358**
53X3065	GARLK	**415645!**
53X3065	GARLK	455104
53X3066	GARLK	**415645!**
53X3066	GARLK	455104
53X3067	GARLK	**415645!**
53X3067	GARLK	455104
53X3068	GARLK	417359
53X3070	GARLK	417359
53X3071	GARLK	**417549!***
53X3095	GARLK	**417550**
53X3096	GARLK	**417550***
53X3097	GARLK	**417550**
53X3122	GARLK	**417551**
53X3123	GARLK	**417551***
53X3124	GARLK	**417551**
53X3125	GARLK	**455576!**
53X3126	GARLK	**455576!***

! Industrial Size/Type * Minor Width Difference

= The U.S. customer service number is 877-4-TIMKEN. The Canadian customer service numbers are 800-565-4927 (English) and 800-565-0438 (French-Canadian).

Mfr. No.	Name	Zero Duplication or Recommended Industrial
53X3127	GARLK	455576 !
53X3128	GARLK	415938 *
53X3129	GARLK	415938 *
53X3130	GARLK	415938
53X3131	GARLK	417554 ! *
53X3132	GARLK	417554 ! *
53X3133	GARLK	417554 !
53X3155	GARLK	55357 *
53X3156	GARLK	55357 *
53X3157	GARLK	55357
53X3176	GARLK	417254 *
53X3177	GARLK	417254 *
53X3178	GARLK	417254
53X3179	GARLK	417360
53X3180	GARLK	417360
53X3181	GARLK	417360
53X3182	GARLK	416107 !
53X3183	GARLK	416107 !
53X3183	GARLK	455073
53X3184	GARLK	416107 !
53X3184	GARLK	455073
53X3185	GARLK	417361
53X3190	GARLK	415610
53X3200	GARLK	456192
53X3215	GARLK	55358 =
53X3216	CATER	5634
53X3216	GARLK	55358 =
53X3217	GARLK	55358 =
53X3228	GARLK	417555 ! *
53X3229	GARLK	417555 ! *
53X3230	GARLK	417555 !
53X3234	GARLK	417556 *
53X3235	GARLK	416288 ! *
53X3236	GARLK	417556
53X3240	GARLK	417040
53X3249	GARLK	456199 =
53X3275	GARLK	417362 ! *
53X3276	GARLK	417362 ! *
53X3277	GARLK	417362 !
53X3278	GARLK	417363
53X3281	GARLK	416666 *
53X3282	GARLK	416666 *
53X3283	GARLK	416666
53X3284	GARLK	417364
53X3293	GARLK	416039
53X3296	GARLK	416039
53X3322	GARLK	416476 !
53X3323	GARLK	416476 !
53X3324	GARLK	416476 !
53X3331	GARLK	455297 *
53X3332	GARLK	455297
53X3333	GARLK	455297 *
53X3347	GARLK	417780 *
53X3348	GARLK	417780
53X3349	GARLK	417780 *
53X3355	GARLK	415683
53X3356	GARLK	415683 *
53X3357	GARLK	415683 *
53X3358	GARLK	417365
53X3359	GARLK	417365
53X3360	GARLK	417365
53X3367	GARLK	415072 *
53X3368	GARLK	415072
53X3369	GARLK	415072 *
53X3370	GARLK	415072 *
53X3375	GARLK	455330 ! *
53X3376	GARLK	455330 ! *
53X3377	GARLK	455330 !
53X3384	GARLK	415074 *
53X3385	GARLK	415074
53X3386	GARLK	415074 *
53X3387	GARLK	415074 *
53X3394	GARLK	455480 ! *
53X3395	GARLK	455480 !
53X3396	GARLK	455480 ! *
53X3397	GARLK	455480 ! *
53X3398	GARLK	55316 * =
53X3399	GARLK	55316 * =
53X3400	GARLK	55316 * =
53X3401	GARLK	55316 =
53X3402	GARLK	417562 *
53X3403	GARLK	417562 *
53X3404	GARLK	417562 *
53X3405	GARLK	417562 *
53X3406	GARLK	55692 * =
53X3407	GARLK	55692 * =
53X3408	GARLK	55692 =
53X3417	GARLK	55242 *
53X3418	GARLK	55242 *
53X3419	GARLK	55242 *
53X3420	GARLK	55242
53X3421	GARLK	417563 *
53X3422	GARLK	417563 *
53X3423	GARLK	417563 *
53X3424	GARLK	417563
53X3426	GARLK	415294 !
53X3427	GARLK	415294 !
53X3434	GARLK	416229 *
53X3435	GARLK	416229
53X3444	GARLK	417298 *
53X3445	GARLK	417298
53X3460	GARLK	415327 *
53X3461	GARLK	415327
53X3464	GARLK	417596
53X3465	GARLK	417596
53X3474	GARLK	455948
53X3482	GARLK	455584
53X3483	GARLK	455584
53X3492	GARLK	416364 !
53X3493	GARLK	416364 !
53X3496	GARLK	417597 *
53X3497	GARLK	417597
53X3500	GARLK	416239 !
53X3501	GARLK	416239 !
53X3504	GARLK	417564 *
53X3505	GARLK	417564
53X3514	GARLK	416077 *
53X3515	GARLK	416077
53X3518	GARLK	416044
53X3519	GARLK	416044
53X3526	GARLK	415116 *
53X3527	GARLK	415116
53X3536	GARLK	455117 *
53X3537	GARLK	455117
53X3538	GARLK	415317 *
53X3539	GARLK	415317
53X3544	GARLK	415867 *
53X3545	GARLK	415867
53X3552	GARLK	415551 *
53X3553	GARLK	415551
53X3557	GARLK	415116
53X3558	GARLK	416102
53X3566	GARLK	417598 *
53X3567	GARLK	417598
53X3574	GARLK	457299
53X3578	GARLK	455406 ! *
53X3579	GARLK	455406 !
53X3582	GARLK	455397
53X3583	GARLK	455397
53X3588	GARLK	455121 *
53X3589	GARLK	455121
53X3592	GARLK	415656 *
53X3593	GARLK	415656
53X3596	GARLK	417600 *
53X3597	GARLK	417600
53X3600	GARLK	417601 *
53X3601	GARLK	417601
53X3602	GARLK	417602 ! *
53X3607	GARLK	415124 *
53X3609	GARLK	417022 *
53X3610	GARLK	417604 *
53X3611	GARLK	417567 *
53X3613	GARLK	415128 *
53X3614	GARLK	455129 *
53X3615	GARLK	55301S
53X3617	GARLK	455476
53X3618	GARLK	456462
53X3619	GARLK	455462
53X3623	GARLK	415090
53X3624	GARLK	415090 *
53X3627	GARLK	55218 =
53X3633	GARLK	415219 *
53X3634	GARLK	415871
53X3646	GARLK	417606 *
53X3648	GARLK	417606
53X3649	GARLK	55222 =
53X3652	GARLK	55239 =
53X3654	GARLK	55078S
53X3655	GARLK	55223 =
53X3656	GARLK	55224 =
53X3660	GARLK	417605
53X3662	GARLK	456483 =
53X3670	GARLK	456483 =
53X3673	GARLK	417020
53X3676	GARLK	417570 *
53X3677	GARLK	417570
53X3680	GARLK	415227 !
53X3687	GARLK	55228 * =
53X3688	GARLK	55228 * =
53X3689	GARLK	55228 =
53X3694	GARLK	415482
53X3705	GARLK	415076 *
53X3737	GARLK	55103S
53X3775	GARLK	455330 !
53X3924	GARLK	417602 ! *
53X3925	GARLK	417602 !
53X3932	GARLK	455123 *
53X3937	GARLK	417603 !
53X3945	GARLK	417567
53X3949	GARLK	455966
53X3951	GARLK	415128
53X3954	GARLK	455462
53X3965	GARLK	416257
53X3967	GARLK	415219
53X3975	GARLK	415871
53X3984	GARLK	417606
53X3989	GARLK	55223 * =
53X3996	GARLK	417020 *
53X3998	GARLK	417020 *
53X4016	GARLK	415227 ! *
53X4030	GARLK	55228 * =
53X4057	GARLK	415077 *
53X4058	GARLK	415077
53X4059	GARLK	415077 *
53X4062	GARLK	415076
53X4184	GARLK	55103S
53X4502	GARLK	417603 !
53X4503	GARLK	417940 !
53X4503	GARLK	55301S *
53X4505	GARLK	455476 *
53X4506	GARLK	456462
53X4507	GARLK	455462 *
53X4515	GARLK	55239 * =
53X4517	GARLK	55078S *
53X4526	GARLK	55228 * =
53X4587	GARLK	416394
53X4929R1	GARLK	417606
53X4966F1	GARLK	417247 !
53X4991R1	GARLK	415294 !
53X5049R1	GARLK	415034 !
53X5201F1	GARLK	417211 !
53X5280F1	GARLK	415036
53X5319F1	GARLK	417492
53X5332F1	GARLK	416321
53X5492F1	GARLK	415041
53X5512F1	GARLK	476470 !
53X5512F1	GARLK	476470
53X5646F1	GARLK	416125 !
53X5683F1	GARLK	417603 !
53X5831F1	GARLK	416888 !
53X5923F1	GARLK	415610
53X5949R1	GARLK	415090
53X6089R1	GARLK	416077
53X6146R1	GARLK	415074
53X6433	GARLK	416364 !
53X6433F1	GARLK	416364 !
53X6434R1	GARLK	417357
53X6435	GARLK	415962
53X6437F1	GARLK	416239 !
53X6484F1	GARLK	476470 !
53X6484F1	GARLK	476470
53X6590F1	GARLK	416332 !
53X6603F1	GARLK	415725 !
53X6661F1	GARLK	417600
53X6711R1	GARLK	415725 !
53X6760F1	GARLK	417603 !
53X6872R1	GARLK	417362 !
53X6891F1	GARLK	416239 !
53X68X10	SIMRT	53X68X10
53X68X10SC	TRSCM	53X68X10
53X68X10TC	TRSCM	53X68X10
53X6920F1	GARLK	415294 !
53X6978F1	GARLK	416380 !
53X7115F1	GARLK	415991 !
53X7115F1	GARLK	415991
53X7151F1	GARLK	415645 !
53X7155F1	GARLK	415072
53X7233F1	GARLK	415551
53X7289F1	GARLK	417191
53X7402F1	GARLK	415088
53X7433F1	GARLK	415072
53X7433R1	GARLK	415072
53X7436F1	GARLK	415327
53X7448F1	GARLK	415036
53X7670F1	GARLK	476470 !
53X7670F1	GARLK	476470
53X7673F1	GARLK	417020
53X7686F1	GARLK	415041
53X7880F1	GARLK	416556 !
53X7880F1	GARLK	472157
53X7909F1	GARLK	417606
53X7953	GARLK	415577 *
53X7973	GARLK	55329 * =
53X8149F1	GARLK	415294 !
53X8216F1	GARLK	415327
53X8306F1	GARLK	416107 !
53X8311F1	GARLK	415437
53X8319F1	GARLK	416321
53X8531F1	GARLK	416670
53X8663R1	GARLK	417541
53X8683F1	GARLK	417511
53X8932R1	GARLK	415725 !
53X8996F1	GARLK	416154 !
53X9209F1	GARLK	412473 !
53X9347F1	GARLK	416158
53X9401R1	GARLK	417355 !
53X9664R1	GARLK	417596
53X9724	GARLK	417487

! Industrial Size/Type * Minor Width Difference

= The U.S. customer service number is 877-4-TIMKEN. The Canadian customer service numbers are 800-565-4927 (English) and 800-565-0438 (French-Canadian).

Mfr. No.	Name	Zero Duplication or Recommended Industrial
53X9780	GARLK	**415294**!
54	UNIVE	**471554**!
540115	BENDI	**471466**!
540166	SPERY	203020
54017	IPS	1955
54017	IPS	52X65X9!
54021	TROS	**476470**
54023	IPS	1181
54023	IPS	41X56X7!
54026	IPS	224045
54026	IPS	40X62X12!
54031	IPS	224270
54031	IPS	42X72X10!
54035	GARLK	**417356**!
54040008	TROS	**417507**
54042	IPS	1994
54042	IPS	48X70X9!
54046	IPS	1953
54046	IPS	42X60X7!
5405	NATL	6480$
54053	IPS	1214
54053	IPS	1214N
54053	IPS	473823
54055	GARLK	**417357**
5406	NATL	6481S
54060	IPS	224045
54060	IPS	40X62X12!
540603	SPERY	**471231**!
540644	C-R	472635
540708	C-R	370132A
540727	C-R	712260
540782R91	IH	482591=
540856	CONTI	415137!
540856	CONTI	**418028**
540870	C-R	**472258**!
54089	TROS	**417487**
54091	IPS	225005
54091	IPS	50X62X7!
540924	C-R	**471442**!
54094	IPS	1012
54094	IPS	1012N
54096	IPS	1180
54096	IPS	41X55X7!
54097	IPS	1955
54097	IPS	52X65X9!
540977	BENDI	**471570**!
54098	IPS	223605
54098	IPS	36X50X7!
541	GARLK	**471192**
5410	HART	**480210**!
5410	LAU	**480210**!
5410SH	JN-MN	**471264***
5410SS	JN-MN	**471264**!
5411	LAU	**471255**!
54117	IPS	1208
54117	IPS	48X72X7!
54119	IPS	1012
54119	IPS	1012N
541196	C-R	**471267**!
541197	C-R	**450412**
541199	C-R	**417621**!
5412	C-R	221410
5412	HART	**471554**!
54121	IPS	1969
54121	IPS	48X63X9!
54125A	GWI	**471763**
54126A	GWI	**471760**
5413	C-R	14X25X5!
5413	C-R	710116
54131	IPS	239146
54131	IPS	38X54X7!
54134	IPS	**1213N**
5414	C-R	710116
54140	TROS	6781
541429	C-R	**471526**!
541485M1	MASSE	353132
541486M1	MASSE	340817
541487M1	MASSE	**470954**!
5414B	JN-MN	**410190**
5414LUP	JN-MN	**410190**
5415	C-R	14X26X7
541503	C-R	**417350**!
541582	C-R	**471526**!
5415B	JN-MN	55199*=
54160	TROS	1077=
5416B	JN-MN	**473235**!
541746	C-R	**470354**
541845M1	MASSE	340413
541849	C-R	**417484**
541934	ALLCH	**480630**!
541949	C-R	3591
542	GARLK	450165
542	GARLK	**471801**!
5420	C-R	14X27X7*
542126R91	IH	**471801**!
542127R91	IH	**471733**
542134R91	IH	**471760**
54215D	IH	**472179**
542161	C-R	**472164**!
54220S	TROS	5487
542321	C-R	**415988**
542329	C-R	712270
542390	C-R	477163N
5423B	JN-MN	**415047**
54240	TROS	50402
542499	C-R	3893V
542533	C-R	710067
54255	GARLK	416556!
54255	GARLK	**472157**
542591	ALLCH	**411394**!
54260	TROS	224045
54260	TROS	40X62X12!
54261	TROS	**470898**
54275	GARLK	**415196**!
542895	C-R	370023A
542895	C-R	456618
542899	C-R	**415437**!
542899	C-R	**415437**
54297	GWI	**471570**!
542990	C-R	**410308**!
542990	C-R	473468
543039	C-R	**470774**!
5431	FULLE	**412871**!
5431	SPG	5585
54317C	DIA	**474276**!
543188	C-R	483793
5432	FULLE	**473473**
543219	C-R	5133
54330	C-R	138X152X12!
54330	C-R	138X152X15!*
54330	C-R	710368
5435	HART	**471570**!
5435	LAU	**471570**!
54350	C-R	55357
5435B	JN-MN	**417273**
5436	HART	**471224**!
5436	LAU	**471224**!
54360	TROS	40185
5437	HART	50209
5437	LAU	50209
543771	C-R	710043
5438	LAU	**471649**!
5438B	JN-MN	**417211**!*
5439	C-R	14X28X6
5439	C-R	14X30X7
54392D	C-R	330749V
5439LA	JN-MN	**413478***
5439LUP	JN-MN	**413478**
5440	C-R	14X28X6
544011	C-R	710067
5441	C-R	14X28X6
5441B	JN-MN	**474254**
5442	LAU	**470954**!
5442B	JN-MN	**471684**!
54435612	TROS	370023A
544386R91	IH	**473517**!
5444	HART	**471255**!
5444	SPG	1996
544452	GMC	332062
5444B	JN-MN	**471730**
5445	LAU	**471267**!
544544	WHITE	370036A
544544	WHITE	370349A
54455	GARLK	**416888**!
544570	VIC	370019A
544570	WHITE	370019A
544630	VIC	370023A
544630	WHITE	370023A
544631	SPICE	**472636**!
544632	SPICE	**473238**
544692	WHITE	370036A
544692	WHITE	370349A
544693	VIC	370021A
544693	WHITE	370021A
544694	VIC	370003A
544694	WHITE	370003A
544694D6	DIA	370003A
544695	VIC	370030A
544695	WHITE	370030A
54475	GARLK	**416153**!
544782R91	IH	46997S
54498	GARLK	**416892**!
5450	C-R	14X30X7
545007	C-R	**471554**!
54501S	TROS	9613S
545059	C-R	**473214**
545067	C-R	**472164**!
5451OSR	JN-MN	55218=
5452	C-R	14X30X7
5452	LAU	**471466**!
545290	GIB	**415035**
545290	GIB	**415035**!
545298	WHITE	**471821**!
545327	BOWEN	**417191**
545327	BOWEN	456585
545333	KEN	**472029**
54533HA	IH	**415437**
54534HA	IH	**415437**
5453528	GMC	**471442**!
545364	ALLCH	**417349**
545376	CONDC	**415551**
54539	MC-CL	**473230**!
5454	C-R	14X30X7V
5454	LAU	470328
5454	LAU	**481213**!
545458	WHITE	**473473**
5455	LAU	**470606**!
5456	C-R	14X30X7V
5459	LAU	**471442**!
5459B	JN-MN	**415072***
5460B	JN-MN	**417562**
5461B	JN-MN	**417596**
5462	LAU	7014S
54625	GARLK	**415138**!
5463	LAU	**471539**!
5464	SPG	370002A
54645	GARLK	**417247**!
546494D6	DIA	370003A
5464R	JN-MN	**416956**
5465	LAU	**471224**!
5465	SPG	**417506**
5465R	JN-MN	**473462**
5466	LAU	340771
546667	GMC	**416239**!
5466B	JN-MN	**473464**!
5466B	JN-MN	**473464**
5466LPD	JN-MN	**473464**!
5466LPD	JN-MN	**473464**
5467	LAU	**481644**
5467	SPG	370019A
5467R	JN-MN	**472397**!
5468	LAU	441130
5468	SPG	370005A
5468B	JN-MN	**416891**!*
5469B	JN-MN	**415219***
546D	CALI	**416666**
546ED	CALI	**455330**!
547	HART	**450040**
547	LAU	**450040**
5470	C-R	14X32X7
5470	LAU	**471649**!
5472	NATL	7006S
54721	TROS	5479
547253	GMC	9845
5472B	JN-MN	**474255**
5473SS	JN-MN	**471442**!
547431R91	IH	6180=
5474G	P-C	TCS45483
5475	C-R	370023A
5475	C-R	5667
5475	NATL	**417505**
5475	NATL	5667
5475	WMG	**417505**
54760	TROS	224040
54760	TROS	40X60X10!
547915C91	IH	370065A
547915C91	IH	376590A
5480	C-R	14X35X7
5480	SPG	**471646**!
5480LA	JN-MN	50191
5480LPD	JN-MN	50191
5481	C-R	14X35X7
548212	ALLCH	**473226**
548342	ALLCH	**471271**!
548349	ALLCH	**473474**
5483B	JN-MN	**415960**
5484	CHAMP	**470954**!
54840009	TROS	**415041**
54840014	TROS	370036A
54840014	TROS	370349A
54840014	TROS	380036A
54840809	TROS	**415043**
54843209	TROS	**416892**
54844009	TROS	**415371**
54844409	TROS	**415284**
54844412C	TROS	**415284**
54844809	TROS	**415138**!
5484B	JN-MN	**415023**
5485B	JN-MN	**416891**!
54861	TROS	**471224**!
5486B	JN-MN	**415072**
5487B	JN-MN	**416239**!
5488	SPG	5589
5488B	JN-MN	**417556**
548913	CHRYS	**415988**
5489B	JN-MN	**417357**
5489B	JN-MN	455192!
5489LPD	JN-MN	**417357**

! Industrial Size/Type * Minor Width Difference $ F-M Number Is Part Of A Kit
= The U.S. customer service number is 877-4-TIMKEN. The Canadian customer service numbers are 800-565-4927 (English) and 800-565-0438 (French-Canadian).

Mfr. No.	Name	Zero Duplication or Recommended Industrial
5489LPD	*JN-MN*	455192!
5489LUP	*JN-MN*	**417357**
5489LUP	*JN-MN*	455192!
548BM416	*C-R*	**416888**!
548ED	*CALI*	**415295**
549	*HART*	**451583**!
549	*LAU*	**451583**!
5490B	*JN-MN*	455197N
5491B	*JN-MN*	**417507**
5491B	*JN-MN*	**417507**!
54923	*C-R*	**476842**
54928	*CHRYS*	5M81
54929	*C-R*	6872S
54930	*C-R*	5471
54931	*C-R*	**417254***
54933	*C-R*	**417254**
54934	*C-R*	**417254***
54935	*C-R*	5473
54940	*C-R*	**417254**
54941	*C-R*	**417254**
54943	*C-R*	**417254**
54946	*C-R*	**417360**
54947	*C-R*	**417360**
54948	*C-R*	**417360**
54949	*C-R*	**417360**
5494G	*P-C*	TCS45483
5495	*FREIG*	5495
54950	*C-R*	**416107**!
54950	*C-R*	455073
54959	*C-R*	**416107**!*
54960	*C-R*	**416107**!*
54971	*C-R*	**416107***
549712R1	*IH*	**470954**!
54971R	*CASE*	**470954**!
54971R1	*CASE*	**470954**!
54972	*C-R*	**416107**!*
54973	*C-R*	**416107**!
54978	*C-R*	**416107**!
54979	*C-R*	**416107**!
54980	*C-R*	**416107**!
54981	*C-R*	**416107**!
549818	*US-EL*	**352541**
54990	*C-R*	**416107**!
54990	*C-R*	455073
54C-49	*OLIVE*	40061S=
54X65X8SC	*TRSCM*	54X65X8
54X65X8TC	*TRSCM*	54X65X8
54X72X10SC	*TRSCM*	54X72X10!
54X72X10TC	*TRSCM*	54X72X10!
54X73X8SC	*TRSCM*	54X73X8!
54X73X8TC	*TRSCM*	54X73X8!
54X82X10	*NATL*	225450
54X82X10SC	*TRSCM*	54X82X10
54X82X10TC	*TRSCM*	54X82X10
54X85X10SC	*TRSCM*	54X85X10!
54X85X10TC	*TRSCM*	54X85X10!
55	*UNIVE*	**474253**!
55-S282	*LETN*	**416364**!
55-S556	*LETN*	455556
5500	*C-R*	712028
55000	*SPG*	**417073**
550001	*C-R*	1049
550002	*C-R*	1010=
550003	*C-R*	1037
550004	*C-R*	**471737**
550005	*C-R*	**472299**
55001	*SPG*	**415001**!
550012	*C-R*	**472492**!
550017	*C-R*	**471827**
55001S	*SPG*	**415001**!
55002	*SPG*	**415988**
55002S	*SPG*	**415988**
55003	*SPG*	**415458**!
55003S	*SPG*	**415458**!
55004	*SPG*	**417316**!
550042	*C-R*	1094=
550044	*C-R*	**472492**!
55004S	*SPG*	**417316**!
55005	*SPG*	**455005**
550059	*C-R*	**473238**!
55005S	*SPG*	**455005**
55006	*SPG*	**417344**!
550060	*C-R*	**470712**!
550069	*C-R*	2551
55006S	*SPG*	**417344**!
55007	*SPG*	**415007**
550071	*C-R*	1070=
550073	*C-R*	1097N
550074	*C-R*	**472311**
55007S	*SPG*	**415007**
55008	*SPG*	**455008**
550081	*C-R*	1873
550082	*C-R*	**470898**
550085	*C-R*	**451948**
550085	*C-R*	472579!
550087	*C-R*	**471192**
550088	*CLARK*	**472492**!
550089	*C-R*	**416664**!
55009	*SPG*	**415960**
550094	*C-R*	**472164**!
550095	*C-R*	1097N
550097	*C-R*	**472258**!
550099	*C-R*	**471195**!
55009S	*SPG*	**415960**
5500R	*JN-MN*	**473458**!
5501	*ALOY*	2146
55010	*SPG*	**417485**
550102	*C-R*	**471224**!
550106	*C-R*	1110
55011	*SPG*	**416921**!
550111	*C-R*	1035=
550115	*C-R*	**473234**!
55011S	*SPG*	**416921**!
55012	*SPG*	**416654**!
550121	*C-R*	**472164**!
550124	*C-R*	1110
55012S	*SPG*	**416654**!
55013	*SPG*	**415995**!
550135	*C-R*	1091=
550139	*C-R*	**471787**!
55013S	*SPG*	**415995**!
55014	*SPG*	**417487**
550148	*C-R*	223005
550148	*C-R*	30X40X7!
55014S	*SPG*	**417487**
55015	*SPG*	455015
550154	*C-R*	1012
550154	*C-R*	1012N
550154	*C-R*	**471831**!
550158	*C-R*	225230
55016	*SPG*	**416288**!
550165	*C-R*	4529N
55016S	*SPG*	**416288**!
55017	*SPG*	**456105**
550175	*C-R*	224520
550175	*C-R*	45X60X10!
550178	*C-R*	473560N
55017S	*SPG*	**456105**
55018	*SPG*	**476470**
550184	*C-R*	224040
550184	*C-R*	40X60X10!
550185	*C-R*	224850
550185	*C-R*	**473455**!
550186	*C-R*	1077=
550186	*C-R*	223535
550189	*C-R*	1163=
55018S	*SPG*	**476470**
55019	*SPG*	**455019**!
550190	*C-R*	40X58X10!*
550193	*C-R*	226020
550193	*C-R*	60X80X8!
550199	*C-R*	224045
550199	*C-R*	40X62X12!
55019S	*SPG*	**455019**!
550202	*C-R*	1062=
550217	*C-R*	1174
550219	*C-R*	32X58X8!
55022	*SPG*	455022
550220	*C-R*	224045
550220	*C-R*	40X62X12!
550222	*C-R*	1170
550223	*C-R*	1173
550224	*C-R*	1167
550225	*C-R*	1977
550226	*C-R*	47X62X8!
550227	*C-R*	1174
550227	*C-R*	38X52X8.5!
550228	*C-R*	1183
550228	*C-R*	43X55X8!
550229	*C-R*	2000
550229	*C-R*	224235
550229	*C-R*	42X58X7!
55023	*SPG*	**415023**
550230	*C-R*	224045
550230	*C-R*	40X62X12!
550231	*C-R*	223542
550231	*C-R*	35X55X11!
550232	*C-R*	41X56X7!
550233	*C-R*	223542
550233	*C-R*	35X55X11!
550234	*C-R*	1177
550236	*C-R*	224015
550237	*C-R*	224205
550237	*C-R*	42X55X8!
550238	*C-R*	1959
550239	*C-R*	1955
550239	*C-R*	52X65X9!
55023S	*SPG*	**415023**
55024	*SPG*	455024
550240	*C-R*	224015
550241	*C-R*	55X82X12!
550242	*C-R*	1956
550243	*C-R*	1167
550244	*C-R*	43X65X8!
550244	*C-R*	**470460**
550245	*C-R*	224560
550246	*C-R*	**471831**!
550247	*C-R*	1217
550249	*C-R*	224270
550249	*C-R*	42X72X10!
55025	*SPG*	**415025**
550250	*C-R*	223830
550250	*C-R*	223832
550250	*C-R*	38X55X7!
550251	*C-R*	1994
550251	*C-R*	48X70X9!
550255	*C-R*	222510
550255	*C-R*	25X35X7!
550256	*C-R*	1981
550257	*C-R*	1174
550257	*C-R*	38X52X8.5!
550258	*C-R*	2000
550258	*C-R*	224235
550258	*C-R*	42X58X7!
55025S	*SPG*	**415025**
55026	*SPG*	**455026**
550260	*C-R*	**1213N**
550262	*C-R*	223542
550262	*C-R*	35X55X11!
550263	*C-R*	1994
550263	*C-R*	48X70X9!
550264	*C-R*	1214
550264	*C-R*	1214N
550265	*C-R*	1981
550267	*C-R*	710050
550267	*C-R*	712011
55027	*SPG*	**415027**
55027	*SPG*	**415027**!
550270	*C-R*	1174
550270	*C-R*	1205
550270	*C-R*	1205N
550270	*C-R*	38X52X8.5!
550270	*C-R*	710309*
550271	*C-R*	1187
550271	*C-R*	47X68X10!
550275	*C-R*	1195
550278	*C-R*	1209
550279	*C-R*	1208
550279	*C-R*	48X72X7!
55027N	*SPG*	**415027**
55027S	*SPG*	**415027**!
55027S	*SPG*	**415027**
550280	*C-R*	1969
550280	*C-R*	48X63X9!
550284	*C-R*	222242
550285	*C-R*	482126
550288	*C-R*	224320*
55029	*SPG*	**416125**!
550294	*C-R*	224560
550294	*C-R*	45X68X7!
55029S	*SPG*	**416125**!
55030	*GARLK*	**415725**!
55031	*SPG*	**416339**
55031	*SPG*	455031!
550310	*C-R*	455612=
550312	*C-R*	2642
550314	*C-R*	455472=
550316	*C-R*	**417496**
55031S	*SPG*	**416339**
55031S	*SPG*	455031!
55032	*NATL*	**455032**!
55032	*SPG*	**455032**!
550322	*C-R*	417502
55033	*SPG*	**416345**!
55033	*SPG*	455033
550330	*C-R*	**417506**
550330Q6	*C-R*	**417506**
55033S	*SPG*	**416345**!
55033S	*SPG*	455033
55034	*SPG*	**415034**!
55034S	*SPG*	**415034**!
55035N	*SPG*	**415035**
55035S	*SPG*	**415035**!
55035S	*SPG*	**415035**
55036	*SPG*	**415036**
55036S	*SPG*	**415036**
55037	*SPG*	455037
55037S	*SPG*	455037
55038	*SPG*	**417512**
55040	*SPG*	**416891**!
55040S	*SPG*	**416891**!
55041	*SPG*	**415041**
550410	*C-R*	455197N
550410M1	*C-R*	455197N
550412	*C-R*	**415196**!
550412M1	*C-R*	**415196**!
550414	*C-R*	55199=
550414M1	*C-R*	55199=

! Industrial Size/Type * Minor Width Difference

= The U.S. customer service number is 877-4-TIMKEN. The Canadian customer service numbers are 800-565-4927 (English) and 800-565-0438 (French-Canadian).

Mfr. No.	Name	Zero Duplication or Recommended Industrial
550416	C-R	416888!
550416	GR-DV	416888!
550416	MINMA	416888!
550416M1	C-R	416888!
55041S	SPG	415041
55042	C-R	455037
55043	SPG	415043
55044	C-R	417512
55044M1	C-R	417512
55045	SPG	415045!
550450	CLARK	45827S
55045S	SPG	415045!
55046	C-R	417513
55046M1	C-R	417513
55048	C-R	416891!
55048	FAIRB	416891!
55048	GOODM	416891!
55048	GR-DV	416891!
55048	SPG	417525
55048K	GOODM	416891!
55049	SPG	416892!
55049S	SPG	416892!
5504G	P-C	TCS45483
5505	C-R	313156
55050	SPG	417533
55053	SPG	415138!
55053S	SPG	415138!
55054	SPG	417223
55054S	SPG	417223
55056	SPG	455056
55058	SPG	415058
55058S	SPG	415058
55059	SPG	417238
55060	SPG	415060
55060	SPG	455060
55062	SPG	415351!
55062S	SPG	415351!
55063	SPG	457585
55065	SPG	417536
55067	SPG	456890
55068	SPG	417269!
55068S	SPG	417269!
5506SS	JN-MN	471255!
55070	SPG	416865!
55070N	SPG	416865
55070S	SPG	416865!
55071	SPG	417546!
55071S	SPG	417546!
55072	SPG	415072
55072S	SPG	415072
55073	SPG	416107!
55073	SPG	455073
55073R91	IH	471532
55073S	SPG	416107!
55073S	SPG	455073
55075	SPG	416476!
55075S	SPG	416476!
55076	SPG	415076
55077	SPG	415077
55077AX	OSHKO	471267!
55078SSR	SPG	55078S
55079	SPG	455079!
55079A	OSHKO	415899N
55079A	OSHKO	416624
55079S	SPG	455079!
55080	GARLK	416865!
55080	SPG	455080
55082	SPG	415082
55084	SPG	416239!
55084S	SPG	416239!
55085	SPG	415085!
55085	SPG	456648
55086	SPG	417487
55086S	SPG	417487
55087	BOSTN	471281!
55088	BOSTN	254287
55088	SPG	415088
55088	SPG	415088!
55088S	SPG	415088
55088S	SPG	415088!
55091	SPG	416167!
550914R91	IH	471224!
55091S	SPG	416167!
55093	ONAN	416888!
55093	SPG	411376!
55093S	SPG	411376!
55094	AM WH	417488!
55094	SPG	416444
55094S	SPG	416444
55095	SPG	416271!
55095S	SPG	416271!
55096	SPG	411245!
55096S	SPG	411245!
55098	SPG	415302
55098S	SPG	415302
550F4	C-R	415036
550F48	C-R	416891!
550H2	WHITE	471466!
550H410-T8	C-R	455197N
550M48-B	C-R	416891!
550W410	C-R	455197N*
550W412	C-R	415196!
550W414	C-R	55199*=
550W662	CONE	5146
5510	C-R	313156
55101	SPG	416282
55102S	TROS	415302
55104	SPG	415645!
55104	SPG	455104
55104S	SPG	415645!
55104S	SPG	455104
55105	SPG	415938
55105S	SPG	415938
55106	SPG	417556
55106S	SPG	417556
55108	NATL	457874
55108	WMG	457874
55109	SPG	417562
55109S	SPG	417562
55110	SPG	417563
5511068	AM HO	5965
55111	SPG	416229
55111S	SPG	416229
551123	GMC	472082
55113	SPG	455310
55114	SPG	455584
55115	C-R	140X160X12
55115	C-R	140X160X13!
55115	SPG	416077
55116	C-R	140X160X13*
55116	SPG	415116
55116S	SPG	415116
55117	SPG	455117
55118	C-R	140X170X12!
55118	C-R	710406
55118	SPG	415551
55118S	SPG	415551
55119	C-R	710406
55119	SPG	417598
5511LA	JN-MN	450803
55120	C-R	140X170X15!
55120	C-R	710406
55120	SPG	455406!
55121	C-R	710406
55121	SPG	455121
55123	SPG	455123
55124	SPG	415124
55124S	SPG	415124
55125	C-R	140X170X12V
55125	SPG	417022
55127	C-R	140X180X12!
55127	SPG	417567
55129	SPG	455129
55129S	SPG	455129
55130	C-R	416107!
55130	GARLK	417278
55131	TROS	6815
55131AX	OSHKO	415137!
55131AX	OSHKO	418028
55134	SPG	455134!
55134S	SPG	455134!
55136	NATL	455136
55137	SPG	418028
55137	SPG	455137!
551377	ADAMS	411245!
55137S	SPG	418028
55137S	SPG	455137!
55141Q6	C-R	455037
55143	C-R	416107!
55143	C-R	455073
55144	SPG	455144
55145	SPG	417172
55145S	SPG	417172
55146	SPG	415991
55146	SPG	455146!
55146S	SPG	415991
55146S	SPG	455146!
55147	SPG	415449!
55147S	SPG	415449!
55148	SPG	417366!
55150	C-R	416107!
55150	C-R	455073
55150	SPG	415150!
55151	SPG	455151
55153	SPG	417486
55153S	SPG	417486
55154	SPG	417351!
55154S	SPG	417351!
55156	SPG	417621!
55156S	SPG	417621!
55157	C-R	417361
55158	SPG	417488!
551581	C-R	457734
55158S	SPG	417488!
55161	SPG	417490
55165	C-R	5472=
55165	SPG	417191
55165	SPG	455165!
55165S	SPG	417191
55165S	SPG	455165!
55169	SPG	417493
55170	C-R	7006S
55170	SPG	417196!
55170S	SPG	417196!
55171	SPG	415711
55172	C-R	370043A
55172	SPG	416332!
55172N	SPG	416332!
55173	SPG	415437
55173	SPG	415437!
55173S	SPG	415437
55173S	SPG	415437!
55175	C-R	370120A
55176	SPG	417501
55177	C-R	370120A
55177	SPG	415379
55177	SPG	415379!
55179	C-R	456192
55179	SPG	417210!
55179S	SPG	417210!
55180	C-R	8635S
55180	SPG	417498
55181	C-R	456192=
551837R91	IH	471766!
55184	SPG	417504
55185	SPG	417211!
55185S	SPG	417211!
55186	SPG	417967!
55187	SPG	415187
55188	SPG	417356!
55188	SPG	455188
55189	SPG	455189
55189S	SPG	455189
55191	SPG	455191
55192	SPG	417357
55192	SPG	455192!
55192S	SPG	417357
55192S	SPG	455192!
55194	SPG	455194
55195	SPG	472157!
55195	SPG	472157
55195HA	SPG	472157
55195S	SPG	472157!
55195S	SPG	472157
55196	SPG	415196!
55196S	SPG	415196!
55197N	SPG	455197N
55198	SPG	415198
55199	WMG	457295
55200	SPG	416888!
55200N	SPG	416888
55200S	SPG	416888!
55202	TROS	417506
55203	SPG	455203
55204	SPG	417515
55208	SPG	417526
5520814	GMC	415995!
5521	FULLE	410496!
55210	SPG	417534
552102R91	IH	471554!
55211	SPG	416158
55213	SPG	417247!
55213S	SPG	417247!
55215S	TROS	5458
55216	SPG	417539!
5522	C-R	314259!
55221	SPG	417606
55224	BOSTN	471538!
55225	BOSTN	471612
55226	BOSTN	473380
55226	SPG	417570
55227	SPG	415227!
55229	SPG	415482
55230	TROS	473228
55232	SPG	416153!
55232S	SPG	416153!
552330	WHITE	471870!
55234	SPG	415234!
55234S	SPG	415234!
55236	NATL	415577
55244	SPG	417481
55246	NATL	416919
55249	NATL	455249!
55251H	SPG	455251H
55252	HYST	471466!
55253	SPG	455253
552571	GMC	8610
552572	GMC	8610

! Industrial Size/Type * Minor Width Difference

= The U.S. customer service number is 877-4-TIMKEN. The Canadian customer service numbers are 800-565-4927 (English) and 800-565-0438 (French-Canadian).

Mfr. No.	Name	Zero Duplication or Recommended Industrial
552573	GMC	8610
55260	SPG	**455260**
55263	SPG	**415263**
55263S	SPG	**415263**
55264	SPG	**415867**
55271	SPG	**415725**!
552711	GMC	**472082**=
55271S	SPG	**415725**!
55272	SPG	**416706**!
55272S	SPG	**416706**!
55279	TROS	7245
55280	SPG	**455280**
55281	SPG	**417349**
55281S	SPG	**417349**
55282	SPG	**416364**!
55282S	SPG	**416364**!
5528LA	JN-MN	**471272**!
55290	SPG	455290
55293	NATL	417584
55294	SPG	**415294**!
55294S	SPG	**415294**!
55300	SPG	**417601**
55300S	SPG	**417601**
55301	SPG	**55301S**
55305	SPG	**415991**
55305	SPG	455146!
55305S	SPG	**415991**
55305S	SPG	455146!
5531	TMTR	**450446**
55310	GARLK	**417278**
55310	SPG	455310
55311	SPG	455311
55313	SPG	416670
55315	SPG	**415984**!
55315S	SPG	**415984**!
55317	NATL	415317
55317	WMG	415317
5532	ALOY	8610
5532	TMTR	**412473**!
55321	SPG	455321
55321S	SPG	455321
55322	SPG	**417484**!
55322N	SPG	**417484**!
55322S	SPG	**417484**!
55327	SPG	**415327**
55328	SPG	455328
5532LA	JN-MN	**417211**!*
5533	ALOY	8660S
55330	SPG	**455330**!
55331	SPG	**417191**
55331	SPG	456585
55332	SPG	**415027**
55336	BOSTN	471686
55336	SPG	**455336**
5533LA	JN-MN	**416229**
55340	SPG	**415991**
55340	SPG	455146!
553408	VIC	370048A
553408	VIC	380048A
553408	WHITE	370048A
553408	WHITE	380048A
55341	SPG	417494
55342	SPG	417531
55344	SPG	**416313**
55347	SPG	**417159**
55347S	SPG	**417159**
55349	SPG	**415349**
5534LA	JN-MN	**413247**!
55350	GARLK	**417358**
55354	SPG	**416404**!
55354S	SPG	**416404**!
55355S	SPG	**417158**!
55356S	SPG	**455356**
5535LA	JN-MN	**473225**!
55360	TROS	**470712**!
55362S	TROS	6952S=
55364	SPG	**416664**!
55364S	SPG	**416664**!
55365	NATL	**327303**!
55368	SPG	**415483**!
55368S	SPG	**415483**!
5536LA	JN-MN	**473229**
5536LUP	JN-MN	**473229**
55371	SPG	**415371**
55371S	SPG	**415371**
55375	SPG	455375=
55377	SPG	**417541**
553778	VIC	370048A
553778	VIC	380048A
553778	WHITE	370048A
553778	WHITE	380048A
55377S	SPG	**417541**
55378	SPG	**415284**
55378N	SPG	**415284**
55378S	SPG	**415284**
55379	SPG	**415379**
55379	SPG	**415379**!
55379S	SPG	**415379**!
55379S	SPG	**415379**
55382R91	IH	**473419**
55383	SPG	**416956**
55383S	SPG	**416956**
55384	SPG	**475384**
55393	SPG	**417511**
55394	SPG	**415394**
55396	SPG	**455396**
55397	SPG	455397
5539B	JN-MN	**471835**!
55400	GARLK	**415645**!
55402	SPG	455402=
5541	C-R	**472705**!
5542	C-R	481315V=
5542LPD	JN-MN	**455655**!*
5543	C-R	**472705**!
55434	SPG	**455434**
554361	FRUEH	370020A
554364	FRUEH	730009
554366	FRUEH	HU019A
55436AM	IH	**473367**!
55436AM	IH	**473367**
55437	SPG	**415437**
55437S	SPG	**415437**
55442	NATL	**415442**!
55447	NATL	**415447**
55448	SPG	**417262**!
55450	GARLK	417359
55454	C-R	**417361**
55455	C-R	**417361**
55456	C-R	**417361**
55457	C-R	**417361**
55462	SPG	**455462**
554631	GMC	8660S
5546315	SPICE	**473454**
554633	SPICE	470059
554633	SPICE	**470380**!
554634	SPICE	**471763**
554635	SPICE	**473454**
554636	SPICE	**473231**
554637	SPICE	**473454**
55464	SPG	**417550**
55471	C-R	416191
55471	SPG	**455471**
55473	SPG	**417518**
55475	BOSTN	472951
55475	BOSTN	**474252**
55475	NATL	455475
55476	BOSTN	**472649**
55476	SPG	455476
55477	BOSTN	472642
55477	BOSTN	472642V!
55478	BOSTN	**472644**!
55479	SPG	**417350**!
55480	SPG	**455480**!
55480S	SPG	**455480**!
55481	SPG	417543
55482	SPG	**415482**
55487	SPG	**417555**!
55494N	SPG	455956H
55494S	SPG	417548
55499	SPG	**418029**!
554D	CALI	**415960**!
55502	SPG	**455583N**!
55504S	TROS	7412S
55509	SPG	455509
55513	SPG	**417507**
55513	SPG	**417507**!
55513S	SPG	**417507**
55513S	SPG	**417507**!
55526S	SPG	**417350**!
5553	SPG	370003A
55536	SPG	**455536**
555382R91	IH	**473419**
555383R91	IH	**473438**
555384R91	IH	**472636**!
555385R91	IH	**474274**
555386R91	IH	**473466**
555387R91	IH	50081
555388R91	IH	**471747**!
555389R91	IH	**472185**!
555390R91	IH	**473225**!
555391R91	IH	**470712**!
555392R91	IH	**471224**!
555394R91	IH	**471137**
555395R91	IH	**471137**
555396R91	IH	**471766**!
555397R91	IH	**476838**!
555398R91	IH	**473419**
5554	NATL	7378
55547	SPG	**415697**!
55547	SPG	455547
55547S	SPG	**415697**!
55547S	SPG	455547
55549	SPG	**415035**!
55549	SPG	**415035**
55556	SPG	455556
55558S	NATL	417780
55563	WMG	**417433**!
55565	TROS	222510
55565	TROS	25X35X7!
55566	SPG	**455566**
55566S	SPG	**455576**!
55566S	WMG	**455566**
55576S	SPG	**455576**!
55581	SPG	456618
55583N	SPG	**455583N**!
5558B	JN-MN	**417604***!
55592S	SPG	455592
55601	SPG	**416070**
55613	SPG	**416294**!
55614	WMG	455614
55615	SPG	**418028**
55615	SPG	455137!
55615S	SPG	**418028**
55615S	SPG	455137!
55618	SPG	416029N!
5562	ALOY	7607
55620	BOSTN	**471276**!
55620	GARLK	**417254**
55621	BOSTN	**412920**!
55621	BOSTN	**472950**
55622	BOSTN	**473259**
55623	BOSTN	**473427**
556231	GMC	**472439**
5563	SPG	**417506**
55630	SPG	**415085**!
55630	SPG	456648
55630TB	TRSCM	6872S
55634	SPG	**415371**
5564	ALOY	2506
556452	ACF	**415371**
5565	ALOY	410059
5565	ALOY	**470380**!
5565	ALOY	472189A!
5565	ALOY	9613S
55650	C-R	55358=
55650	GARLK	**417360**
556514C91	IH	291099
55653	DGASK	2904
55655	SPG	**455655**!
5566	ALOY	331301N
5566	ALOY	9015S*
55661	SPG	455661
556623	ACF	**417252**
556672R91	IH	**471504**!
5567	SPG	5092
55672	SPG	**412473**!
556754	ACF	**471689**!
5567SS	JN-MN	**471255**!
556808A	HARWA	55X68X8!
55683	SPG	**415683**
55685	SPG	455685
55689	SPG	**417353**!
55690	SPG	**416297**
556939	CHRYS	**473462**
556976	CHRYS	**410308**!
556D5	DIA	**415960**!
556D5	WHITE	**415960**
5570	SPG	5072
55702S	TROS	**415371**
5570LA	JN-MN	**473232**
5571	DIVCO	**416738**!
5571	DIVCO	450096
55710	GARLK	**417361**
55718	SPG	415060
55718	SPG	455060
55719	SPG	**415960**
557197	CHRYS	**473438**
5571LA	JN-MN	450311*
5571LPD	JN-MN	450311
5572LA	JN-MN	**473010**
557369M1	MASSE	**473214**!
5573LA	JN-MN	**470625**!
5574LA	JN-MN	**473228**
557500	ACF	**413246**
55755SA	TRSCM	**456192**
5576	NATL	5650
557627	ACF	**415483**!
5576SS	JN-MN	**414045**!
557782	GMC	**472439**
5578	C-R	**472705**!*
557810A	HARWA	55X78X10
5579	HYST	**473438**
5579448	AMGEN	714675*
55805D	IH	**473245**!
55820	SPG	455820
55820R91	IH	5MR1009
55823R1	IH	5MR1009
558245	CHRYS	450073

! Industrial Size/Type * Minor Width Difference

= The U.S. customer service number is 877-4-TIMKEN. The Canadian customer service numbers are 800-565-4927 (English) and 800-565-0438 (French-Canadian).

Mfr. No.	Name	Zero Duplication or Recommended Industrial
55829	*SPG*	**410825**
5582LA	*JN-MN*	**471271**!
5583LPD	*JN-MN*	**471747**!
55840	*SPG*	**417604**
55850	*GARLK*	**417362**!
55854	*SPG*	**415854**
55857	*NATL*	**415857**!
55858	*NATL*	**455858**
5586	*SPG*	5072
55860	*SPG*	**417480**!
55861	*GMC*	**476838**!
55865C1	*IH*	41461S
55879D	*IH*	**415449**!
5589	*C-R*	**472705**!
55890	*GARLK*	417363
55896	*SPG*	2055
55901	*TROS*	50419
559032	*C-R*	**416137**
55904	*BOSTN*	**472954**!
55905	*BOSTN*	**473197**!
55906	*BOSTN*	**470596**!
55907	*BOSTN*	**470806**
55908C	*DIA*	5401
55910	*GARLK*	**416666**
5591SS	*JN-MN*	**481528**
55921NA	*SPG*	**413246**
55925	*GARLK*	417364
5592B	*JN-MN*	**450279***
5592EL	*SUL*	**473245**!
55949	*EARTH*	**471764**!
5594LA	*JN-MN*	**415371**
5594LUP	*JN-MN*	**415371**
55962	*EARTH*	**472012**
5597LUP	*JN-MN*	**472185**!
5598	*ALOY*	8705S
5598LUP	*JN-MN*	**415001**!
5599	*ALOY*	8594S
5599	*SPG*	343115
559921	*MC-CL*	5573
559922R91	*IH*	340823
5599LA	*JN-MN*	**473010**
55HB122	*BRADF*	**471766**!
55HB123	*BRADF*	**472015**!
55X100X10ASN	*ISP*	55X100X7
55X100X13SC	*TRSCM*	55X100X13
55X100X13TC	*TRSCM*	55X100X13
55X68X8	*FORSH*	55X68X8!
55X68X8	*SIMRT*	55X68X8!
55X68X8SC	*TRSCM*	55X68X8!
55X68X8TC	*TRSCM*	55X68X8!
55X70X8SC	*TRSCM*	55X70X8!
55X70X8TC	*TRSCM*	55X70X8!
55X72X8SC	*TRSCM*	55X72X8!
55X72X8TC	*TRSCM*	55X72X8!
55X75X10SC	*TRSCM*	55X75X10
55X75X10TC	*TRSCM*	55X75X10
55X75X8SC	*TRSCM*	55X75X8
55X75X8TC	*TRSCM*	55X75X8
55X78X10	*SIMRT*	55X78X10
55X78X10SC	*TRSCM*	55X78X10
55X78X10TC	*TRSCM*	55X78X10
55X80X8SC	*TRSCM*	55X80X8
55X80X8TC	*TRSCM*	55X80X8
55X82X12SC	*TRSCM*	55X82X12!
55X82X12TC	*TRSCM*	55X82X12!
55X85X10SC	*TRSCM*	55X85X10
55X85X10TC	*TRSCM*	55X85X10
55X85X8ASN(32)	*ISP*	55X85X8
55X88X8SC	*TRSCM*	55X88X8
55X88X8TC	*TRSCM*	55X88X8
55X90X13SC	*TRSCM*	55X90X13
55X90X13TC	*TRSCM*	55X90X13
55X90X8AS	*ISP*	55X90X8
56	*UNIVE*	**471570**!*
5600	*ALOY*	5699
56000	*BOSTN*	**472655**
560007R91	*IH*	**472164**!
56001	*BOSTN*	**472953**
56002	*BOSTN*	**471904**
560116R91	*IH*	**471835**!
56012	*EARTH*	**476838**!
5601LA	*JN-MN*	**415351**!
5602	*WMG*	4561V
56024871	*BENDI*	**481073**
5602LA	*JN-MN*	**473463**
56030	*GARLK*	**417365**
5603LA	*JN-MN*	**415036**
560470R91	*IH*	**415458**!
56049J	*DIA*	5751
5604M1	*C-R*	**417507**
5604M1	*C-R*	**417507**!
5605	*C-R*	718610
56050	*GARLK*	**415072**
5605X	*HYST*	**473367**!
5605X	*HYST*	**473367**
5606	*C-R*	**472705**!
5606	*C-R*	718610
5606	*NATL*	39817
560680	*GMC*	3553
560680-850	*GMC*	3553
5606LA	*JN-MN*	**417273**
5607	*C-R*	**472705**!*
5607	*HYST*	470050
56071R91	*IH*	**416282**
560754C1	*IH*	**470898**
5609LA	*JN-MN*	**417602**!
5609LUP	*JN-MN*	**417602**!
56100	*C-R*	**417555**!
56101	*C-R*	**417555**!
56101	*TROS*	**416273**!
56102	*SPG*	416102
56103	*C-R*	5146
56105	*C-R*	**417555**!
5610LUP	*JN-MN*	**415072**
5611LA	*JN-MN*	**472144**!
5611TA	*OSHKO*	370036A
5612LA	*JN-MN*	**472397**!
561328C91	*IH*	**472016**
561347R91	*IH*	**471571**
56135	*C-R*	**417556**
56136	*C-R*	**417556**
56137	*C-R*	**417556**=
5613LA	*JN-MN*	**415960**
5613LPD	*JN-MN*	**415960**
56147	*TROS*	6960
56149	*BOSTN*	**472660**
5614G	*P-C*	TCS45483
56150	*BOSTN*	472651V
56151	*BOSTN*	**472653**!
56153R91	*IH*	**417254**
56155	*C-R*	**417040**
5615B	*JN-MN*	**416666***
56160	*C-R*	**417040**
5616B	*JN-MN*	**417554**!
56178	*TROS*	205017
5617B	*JN-MN*	**455480**!*
5618	*C-R*	**471281**!
561892R91	*IH*	**470954**!
5619SH	*JN-MN*	**473228**
5619SS	*JN-MN*	**473228**!*
561W4	*C-R*	**417507**!
561W4	*C-R*	**417507**
561W4-M1	*C-R*	**417507**
561W4-M1	*C-R*	**417507**!
56205S	*TROS*	5589
562075R91	*IH*	**415498**
562077R91	*IH*	**473454**
56208	*DGASK*	408
56208-F	*REO*	370003A
5620SS	*JN-MN*	343104
56211	*DGASK*	411
56212	*DGASK*	412
56214	*DGASK*	414
56220	*DGASK*	420
56221	*DGASK*	421
5622170	*GM*	414
56222	*DGASK*	422
56224	*DGASK*	424
56225	*DGASK*	425RR
56227	*DGASK*	427RR
56228	*DET*	428RR
56228	*DGASK*	428RR
56229	*DET*	429RR
56229	*DGASK*	429RR
562411	*US-EL*	**472179**
562416	*C-R*	**416153**!
562416	*CLARK*	**416153**!
562416M1	*C-R*	**416153**!
562491R91	*IH*	**472144**!
5626	*C-R*	240007=
5626LA	*JN-MN*	**471862***
5627LPD	*JN-MN*	**470682**
562932C1	*IH*	370007A
5629LPD	*JN-MN*	**471744**!
5629R	*JN-MN*	**471744**!
562W424	*C-R*	55367=
56304	*BOSTN*	476878=
56305	*BOSTN*	477104=
56305	*GOODM*	240698
56306	*BOSTN*	**415001**!
56307	*BOSTN*	**417474**
56309	*BOSTN*	**473243**
5630LA	*JN-MN*	**473449**
5630LUP	*JN-MN*	**473449**!
563149R91	*IH*	6575S
5632LPD	*JN-MN*	**413472**
5633R	*JN-MN*	**473447**
56340	*C-R*	144X160X12*
56343	*NOVI*	**472164**!
563578	*CHRYS*	**415234**!
563653	*CHRYS*	**481864**
563722	*CHRYS*	**470334**!
5639B	*JN-MN*	**473426***
5640LA	*JN-MN*	**476838**!
56411	*BOSTN*	477105=
5641A	*C-R*	**471466**!
564403R91	*IH*	203008
5644LA	*JN-MN*	**473215**!
5644LUP	*JN-MN*	**473215**!
564592R91	*IH*	**472311**!
564631	*SPICE*	**471820**
564632	*SPICE*	**471646**!
5646OSR	*JN-MN*	**417538***
5647	*C-R*	**471281**!
5647B	*JN-MN*	**474265**
5648	*C-R*	**471281**!
5649	*NATL*	370047A
5649B	*JN-MN*	**417554**!*
5650	*C-R*	**471281**=
5651R	*JN-MN*	**417273***
5652	*C-R*	**471281**!
56520	*TROS*	**471652**
56520	*TROS*	482208!
565280	*CHRYS*	**470898**!
5652R	*JN-MN*	**415034**!
5653	*C-R*	**471281**!
5654	*SPG*	5604
56544C	*DIA*	**415066**
56560	*TROS*	1094=
5659SH	*JN-MN*	340930*
56601S	*TROS*	**473231**!
5660LA	*JN-MN*	450398
5660LA	*JN-MN*	**471267**!
5660LUP	*JN-MN*	450398
5660LUP	*JN-MN*	**471267**!
5661	*C-R*	**471281**!
5661151	*GMC*	**472185**!
5661486	*GM*	**471763**
5661486	*GMC*	**471763**
566162R91	*IH*	**415483**!
5661LA	*JN-MN*	**471267**!
5662	*C-R*	**471281**!
5662	*GILSN*	200354
566201R91	*IH*	**473232**
5662200	*GMC*	**472560N**
5662B	*JN-MN*	**471760**
56630H	*IH*	**410737**!
566330	*US-EL*	**474264**
5663766	*GMC*	**470954**!
5663834	*GMC*	**471413**!
5663837	*GMC*	**471267**!
5664016	*GMC*	**471466**!
56641S	*TROS*	3103!
5664459	*GMC*	**471646**!
5664690	*GMC*	**323138**!
5665LA	*JN-MN*	**471466**!
56660	*TROS*	**471195**!
56665TA	*TRSCM*	**417555**!
5666LA	*JN-MN*	**471224**!
5667	*NATL*	370023A
5667	*NATL*	**417505**
566701R91	*IH*	6590S
5667B	*JN-MN*	55155*=
56685TA	*TRSCM*	**417556**
5668752	*GMC*	**471737**=
5669LA	*JN-MN*	**473234**
5670060	*GMC*	**473237**!
56715TA	*TRSCM*	**417040**
5671B	*JN-MN*	**471466**!
567236	*CHRYS*	**413469**!
5672855	*GMC*	7412S
5672997	*GMC*	**471689**!
5673120	*GMC*	7840S
5673121	*GMC*	7399S!
5674114	*GMC*	**254270**
5675	*C-R*	240007=
5675600	*GMC*	340413
567816R91	*IH*	**417492**
567824R91	*IH*	290070=
567824R91	*IH*	**472185**!
567826R91	*IH*	**472164**!
567829R91	*IH*	**471192**
567878	*CHRYS*	**470898**
56793698	*IG-RA*	**415085**!
56793698	*IG-RA*	456648
5679R	*JN-MN*	**417298***
568008A	*HARWA*	56X80X8
56801S	*TROS*	**471267**!
568020R91	*IH*	**471571**
56803A	*WHITE*	**471689**!
5681410	*GMC*	8059S
5682846	*GMC*	**471267**!
5682898	*GMC*	PSK-1
5683	*C-R*	**471281**!
5683373	*GMC*	PSK-1
5683898	*GMC*	8059S
568403	*CHRYS*	**473215**!
568404	*CHRYS*	**473215**!

! Industrial Size/Type * Minor Width Difference

= The U.S. customer service number is 877-4-TIMKEN. The Canadian customer service numbers are 800-565-4927 (English) and 800-565-0438 (French-Canadian).

Mfr. No.	Name	Zero Duplication or Recommended Industrial
568452	CHRYS	450467
5685	C-R	**471281**!
56851	GMC	**473419**
5685355	GMC	PSK-1
5685524	GMC	7013S
56860	TROS	1049
56861	GMC	**476838**!
5686644	GMC	7013S
568674	CHRYS	**472394**
568688	CHRYS	**472016**
568690	GMC	470059
568690	GMC	**470380**!
568767R91	IH	240731
568769R91	IH	**473438**
568770R91	IH	**415458**!
5688020	GMC	**471538**
5689	SPG	228020
5689	SPG	80X105X13!
5689B	JN-MN	**457874***
5690	C-R	**471281**!
56903	JOY	**415138**!
5690LPD	JN-MN	**473445***
5691484	GMC	**472164**!
569186	US-EL	**472185**!
5692683	GMC	**471264**!
5696537	GMC	7399S!
569682	US-EL	**472164**!
569684	US-EL	**472185**!
569686	US-EL	**415988**
5696LUP	JN-MN	**474281**!
5699	C-R	450536
5699	C-R	**471535**!
569D6	DIA	5408
569D6	WHITE	5408
569W328	C-R	456618
56H7688	FORD	340797
56X68X10SC	TRSCM	56X68X10
56X68X10TC	TRSCM	56X68X10
56X70X8AN	ISP	56X70X8
56X72X115SC	TRSCM	56X72X11.5
56X72X115TC	TRSCM	56X72X11.5
56X72X7ASN	ISP	56X72X7
56X80X8	SIMRT	56X80X8
56X80X8SC	TRSCM	56X80X8
56X80X8TC	TRSCM	56X80X8
56X82X8SC	TRSCM	56X82X8
56X82X8TC	TRSCM	56X82X8
56X85X8	FORSH	56X85X8
56X85X8	SIMRT	56X85X8
56X85X8SC	TRSCM	56X85X8
56X85X8TC	TRSCM	56X85X8
56X88X8SC	TRSCM	56X88X8
56X88X8TC	TRSCM	56X88X8
56X90X8SC	TRSCM	56X90X8
56X90X8TC	TRSCM	56X90X8
57	MYERS	**473420**
57	UNIVE	472951
57	UNIVE	**474252**
5700207	GMC	42352S
5700208	GMC	343186
5700222	GMC	**471535**!
5700223	GMC	**471646**!
5700224	GMC	**471766**!
5700225	GMC	**471787**
5700227	GMC	**474278**!
5700SS	JN-MN	**472311**!
5704	NATL	**450666**
5705	C-R	450536
5705	C-R	**471535**!
5706	C-R	**471535**!*
5706LA	JN-MN	**415458**!
5707	C-R	**471535**!*
570793	CHRYS	**472409**!
57080	C-R	145X164X14!
57080	C-R	145X164X15!*
57080	C-R	710369
57085D	IH	**417316**!
570D6	WHITE	6270
57110	C-R	145X170X12*
57118	C-R	145X175X15
57120	C-R	145X175X15
57120	TROS	44052
57121	TROS	6954S
57122	TROS	44053
57125	C-R	145X180X12
5712B	JN-MN	**416273**!
5714B	JN-MN	**417350**!
5715	FULLE	**472179**
57160	TROS	**473317**
57160S	TROS	**473317**
5717	C-R	**471535**!
5718	C-R	**471535**!
57196	US-EL	**416339**
57196	US-EL	455031!
5719OSR	JN-MN	**471567**!*
572	C-R	5M289
5720	C-R	**471535**!
57202	TROS	415064
57203	TROS	**417480**!
572050401	EL-MO	**412040**
572056811	EL-MO	40097S
5720LA	JN-MN	**471570**!*
5720LPD	JN-MN	**471570**!
5721	C-R	**471535**!
572106	Y-T	**411253**!
572178	US-EL	**472185**=
5722	SKIL	**481537**
5722LA	JN-MN	**471760***
5723LA	JN-MN	**450342**
5723LUP	JN-MN	**450342**
57240	TROS	**410825**
57248	NATL	39732
5724LA	JN-MN	**471762**!
5724LPD	JN-MN	**471762**!
572571	CHRYS	**473438**
5725LA	JN-MN	**471763***
57269	US-EL	340787
5726LA	JN-MN	**471354**!*
5727LA	JN-MN	**471766**!
5728LA	JN-MN	**471787**!
5728LUP	JN-MN	**471787**!
572915	ADAMS	**471224**!
5729496	GMC	**416654**=
5729LA	JN-MN	450165
5729LA	JN-MN	**471801**!
5729LUP	JN-MN	450165
5729LUP	JN-MN	**471801**!
572A4	WHITE	**412119**!
573	C-R	5M293
573022207	EL-MO	J1111
573022209	EL-MO	J1109
573022218	EL-MO	J1127
573022220	EL-MO	J1125
573022227	EL-MO	JV1117=
573022301	EL-MO	**471466**!
573022302	EL-MO	**471267**!
573022303	EL-MO	**471224**!
573022304	EL-MO	**471413**!
573022305	EL-MO	**480630**!
573022306	EL-MO	**472439**
573022307	EL-MO	**471272**!
573022308	EL-MO	**417621**!
573022309	EL-MO	**472015**!
573022310	EL-MO	**473231**!
573022311	EL-MO	**417349**!
573022312	EL-MO	**470898**
573022313	EL-MO	**416404**!
573022314	EL-MO	**473228**!
573022315	EL-MO	**471424**!
573022316	EL-MO	**472179**
573022321	EL-MO	**471950**
573022322	EL-MO	**471652**
573022327	EL-MO	**473233**!
573022328	EL-MO	475568=
573022332	EL-MO	476341=
573022333	EL-MO	**472258**!
573022334	EL-MO	**470380**!
573022335	EL-MO	**416332**!
573022336	EL-MO	**473204**
573022337	EL-MO	**412040**
573022338	EL-MO	**471341**!
573022355	EL-MO	**474278**!
573022357	EL-MO	**471570**!
573022358	EL-MO	**471692**!
573022359	EL-MO	**472164**!
573022360	EL-MO	**472397**!
573022361	EL-MO	**470712**!
573022362	EL-MO	**473445**
573022363	EL-MO	470961=
573022374	EL-MO	**470590**
573022375	EL-MO	295113=
573022378	EL-MO	**471835**!
573022379	EL-MO	**471255**!
573022380	EL-MO	**416288**!
573022383	EL-MO	416041
573022385	EL-MO	**470605**!
573022386	EL-MO	**416345**!
573022387	EL-MO	**471554**!
573022388	EL-MO	**416380**!
573022389	EL-MO	**416345**!
573022390	EL-MO	**416664**!
573022391	EL-MO	**470380**!
573022392	EL-MO	**471424**!
573022393	EL-MO	**471646**!
573022394	EL-MO	**450593**!
573022395	EL-MO	**471571**
573022397	EL-MO	**471692**!
573022398	EL-MO	**252277**
5730223C18	EL-MO	41081S=
5730LA	JN-MN	**473214**
5731LA	JN-MN	470950!
5731LA	JN-MN	6241S
5731LPD	JN-MN	470950!
5731LPD	JN-MN	6241S
573248101	EL-MO	**471466**=
573248102	EL-MO	**471267**=
573248103	EL-MO	**471224**=
573248104	EL-MO	**471413**=
573248105	EL-MO	**480630**=
573248106	EL-MO	**472439**=
573259R91	IH	**473214**
5732LA	JN-MN	**473226***
5732LUP	JN-MN	**473226**
5733	WMG	**472016**
5733LA	JN-MN	470059
5733LA	JN-MN	**470380**!
57340	TROS	**470487**!
5734LA	JN-MN	**473440**!*
5734LUP	JN-MN	**473440**!
573515010	EL-MO	**415483**
573515011	EL-MO	**473237**!
573515014	EL-MO	**417344**!
5735316	B-L-H	**471737**
5735LA	JN-MN	**473234**
57360S	TROS	7686S
5736LA	JN-MN	**472179**
5737	C-R	**471551**!
5737LA	JN-MN	**472394**
5737LUP	JN-MN	**472394**
5738LA	JN-MN	**473462**
5739	C-R	**471551**!
5739LA	JN-MN	**472397**!
573H422-T8	C-R	**415284**
57403D	IH	**472015**!
5740LA	JN-MN	**472397**!
5741SH	JN-MN	**412920**!
57420	TROS	6930
57421	TROS	7044NA
574238R91	IH	240731
574239R91	IH	**472311**!
574362	CHRYS	**455336**
574384	CHRYS	**455336**
574389R91	IH	240736
5743LA	JN-MN	**413478***
5744	C-R	**415041***
57440	TROS	5126
574424	C-R	**415138**!*
5744LA	JN-MN	**455079**!
5744LUP	JN-MN	**455079**!
574562	CHRYS	**455249**!
574563	CHRYS	**455249**!
5745LA	JN-MN	**417343**!
5745LUP	JN-MN	**417343**!
5746LA	JN-MN	**455151**
5747LA	JN-MN	**415960**
5748LA	JN-MN	**476470**
5749LA	JN-MN	**416158***
574W4	C-R	**415041**
574W42	C-R	**415371**
574W420	C-R	**415371**
57502R	TROS	**472164**
57505	C-R	**415447***
57507	C-R	**415447**
57508	C-R	**417362**!
57509	C-R	**417362***
5750LA	JN-MN	**472572**!
57510	C-R	**417362**!
57511	C-R	**417362**!
57512	C-R	**417362**!
57513	C-R	**417362**!
57514	C-R	**417362**!
57516	C-R	417363
57517	C-R	417363
57518	C-R	417363
57519	C-R	417363
5752	HYST	**416339**
5752	HYST	455031!
57520	C-R	**416666**
57520S	TROS	**471652**
57520S	TROS	482208!
57521	C-R	**416666***
57522	C-R	**417362**=
57523	C-R	**416666**=
57528	C-R	**416666**
57529	C-R	**416666**
5752B	HYST	**416339**
5752B	HYST	455031!
57530	C-R	**416666**
57531	C-R	**416666***
575316	C-R	**455396**
575318	C-R	455402=
575320	C-R	455436=
5754	C-R	**415041**
5754	GOODM	**415041**
57540	C-R	**416666***
57540S	TROS	353135
57540S	TROS	**474278**!
575410	C-R	**417520**

! Industrial Size/Type * Minor Width Difference

= The U.S. customer service number is 877-4-TIMKEN. The Canadian customer service numbers are 800-565-4927 (English) and 800-565-0438 (French-Canadian).

Mfr. No.	Name	Zero Duplication or Recommended Industrial
575410M1	C-R	417520
575412	C-R	415047
575412M1	C-R	415047
575414	C-R	417525
575414M1	C-R	417525
575416	C-R	416892!
575416	CABOT	416892!
575416M1	C-R	416892!
575418	C-R	417533
575418M1	C-R	417533
575419	C-R	415371
57541R	TROS	331227H
575420	C-R	415371
575420	MINMA	415371
575420M1	C-R	415371
575422	C-R	415284
575422M1	C-R	415284
575423C91	IH	711552
575424	C-R	415138!
575424	GOODM	415138!
575424	GR-DV	415138!
575424M1	C-R	415138!
575426	C-R	455251H
57542S	TROS	471827
57544	C-R	415043
57544M1	C-R	415043
57546	C-R	417514
57548	C-R	415045!
57548M1	C-R	415045!
57549	HYST	471272!
5754M1	C-R	415041
5755	C-R	471551!
575583	CHRYS	415041
575584	CHRYS	415041
5756	C-R	471551!
57578	C-R	417364
57580	C-R	416029N!
57581	C-R	416029
57581	C-R	416029N!
57584	C-R	416039
5758B	JN-MN	416107!
5758B	JN-MN	455073
57599	C-R	148X170X15
575B420	C-R	415371
575CP416-L	C-R	416892!
575H424-T8-L	C-R	415138!
575M426-L	C-R	455251H*
575W4	C-R	415041*
576	AMC	450033
5760R	JN-MN	415991
5760R	JN-MN	455146!
576209	CHRYS	415041
5764	C-R	471551!
5764	TMTR	473238
5764SS	JN-MN	471733
5765	C-R	471551!
5765LA	JN-MN	474255
57661S	TROS	471195!
576755TA	TRSCM	417362!
57688R91	IH	456618
576DMM422-T8	C-R	415284
576DMM426-L	C-R	75251S
576W4-M1	C-R	370036A
576W4-M1	C-R	370349A
576W4-M1	C-R	380036A
576W4-T8	C-R	370036A
576W4-T8	C-R	370349A
576W4-T8	C-R	380036A
5770	NATL	225010
5770LUP	JN-MN	416654!
5770OSR	JN-MN	416654!
5771LA	JN-MN	415001!
5772	SPG	471141!
5772A	C-R	471827
5772LA	JN-MN	470334!
5772LUP	JN-MN	470334!
57732	MC-CL	481443!
577321	MC-CL	481443!
5773LA	JN-MN	414045!
57764	GRAY	471766
57773	US-EL	415035!
57773	US-EL	415035
5778	SPG	5778
5779	HYST	473438
578010	CHRYS	455151
578011	CHRYS	455151
5780SS	JN-MN	471570!
5781LA	JN-MN	472924!
5782	CATER	450269
5782	TMTR	470334!
5782LA	JN-MN	471466!
57840S	TROS	7188S
57841	TROS	40494S
578576	ALLCH	205017
57883	HYST	470409!
57883	HYST	50409
578913-C1	IH	370057A
578982	MC-CL	481481
5790	C-R	15X24X7!
5790	C-R	2027
5792	NATL	473450!
579207	GMC	8139
5792LUP	JN-MN	55X72X8!
57936	HYST	40494S
5793SH	JN-MN	471689*
5793SS	JN-MN	471689!
579432	GMC	7607
579651	ALLCH	473461!
579908	ALLCH	204017
57F	CLARK	240319
57G	CLARK	417267
57GC186A	MACK	5645
57GC186B	MACK	5645
57GC187A	MACK	5039
57X85X13SC	TRSCM	57X85X13
57X85X13TC	TRSCM	57X85X13
5800	C-R	15X24X7
580028B	SPG	712133
580036C	SPG	580036
580046	SPG	580046
580048C	SPG	580048
580050C	SPG	580050
580058	SPG	224520
580058C	SPG	580058
580085C	SPG	580085
5801	NATL	414045!
5801	WMG	414045!
580154C	SPG	580154
5802	C-R	15X24X7!
5802	C-R	2027
5803	C-R	221510
580306C	SPG	580306
580315C	SPG	228008
580315C	SPG	580315
580316C	SPG	3771
580353C	SPG	580353
580365C	SPG	580365
580385C	SPG	320595
580386C	SPG	580386
580387C	SPG	580387
580388C	SPG	580388
580389C	SPG	580389
580390C	SPG	710308
580391C	SPG	222743
5804	C-R	15X25X6!
5804	C-R	221510*
5804SS	JN-MN	472258!
5805	C-R	15X26X7
5806	C-R	15X26X7!
58065D	IH	472179
5807	C-R	15X26X7!
5808	C-R	15X25X5!
5808	C-R	221510
5808	NATL	221510
580920	BR-WN	J1138
580980C1	IH	473454
580981C1	IH	473010
5810	C-R	15X28X7
58101	TROS	7107A=
58102	TROS	7107A=
58116	MASTE	340413
5812	C-R	15X28X7
5813	SPG	450307
581333R91	IH	471766!
58142	CARDX	410694!
5815	SPG	6064
581646	IH	476838!
581646R91	IH	476838!
5820	C-R	15X30X7!
5820	C-R	221540
58201S	TROS	5499=
5821	C-R	15X30X7!
5821	C-R	221540
5821	SPG	470898
5821SS	JN-MN	470625!
5823	HYST	J1129
58235078	MACK	AR25
582413R91	IH	472185!
582587C91	IH	370192A
582587C91	NAVST	370192A
5825LA	JN-MN	55155=
5825LUP	JN-MN	55155=
5826LA	JN-MN	472439
5826LPD	JN-MN	472439
5827B	JN-MN	471689!
5828R	JN-MN	472144!*
5830	C-R	15X32X8
5830153	GMC	471766*=
5830526	GMC	455024
5830SS	JN-MN	471192
5831	C-R	15X32X7!
5831	C-R	15X32X8!*
5831355	GMC	470954
5831LA	JN-MN	481073
5831LUP	JN-MN	481073
5832	C-R	15X32X7V
5833	SPG	473228
583329R91	IH	240736
583388C91	IH	100263
583388C91	IH	3905
5835	C-R	15X32X7V
5837	C-R	15X32X8!
5839	C-R	15X32X7V
58394	EATON	370021A
584	C-R	5M356
5840	C-R	15X35X7
5841	C-R	15X35X7!
5841LA	JN-MN	470354*
5842	C-R	15X35X7!
58423D	IH	415196!
584346R91	IH	415379
5844	US-EL	413246
58440	TROS	7216
5844R	JN-MN	471424!*
5845	C-R	15X35X7
5846	SPG	6064
58461S	TROS	473452
5847	C-R	15X35X7V
5848	C-R	15X35X7V
584913R91	IH	472193!
585-1151	SPICE	4561V
58502R	TROS	7018N=
585050	CHRYS	470625!
5850D-2011	Y-T	470605!
5850SS	JN-MN	472705!
58519	REX	295200=
58519	REX	416888!
5853-K300047	Y-T	415449!
5853-K304268	Y-T	415379
5853-K304268	Y-T	415379!
5853LA	JN-MN	451583!*
58550	ALLCH	472179
5855LA	JN-MN	471684!
58560	TROS	1041
58561S	TROS	471344
5857LA	JN-MN	471571*
585943-C91	IH	HU110A
585K-15	Y-T	352541
585K-19	Y-T	471821!
585K-21	Y-T	455685
585K-22	Y-T	415196!
585K-23	Y-T	472394
585K-24	Y-T	472397!
585K-25	Y-T	410737!
585K-26	Y-T	472636!
585K-28	Y-T	416556!
585K-28	Y-T	472157
585K-32	Y-T	417344!
585K-34	Y-T	471821!
585K-36	Y-T	40576S
585K-39	Y-T	470088
585K-415	Y-T	471424!
585K-45	Y-T	472397!
585K-46	Y-T	471271!
585K-47	Y-T	417349
585K13	Y-T	471646!
585S-35	Y-T	40568S
585S-36	Y-T	40576S
585S-37	Y-T	417267
585S-413	Y-T	472394
5860	C-R	15X37X6
586089	CHRYS	5M867
5861AB	JOHND	474264
58640S	TROS	3103!
58641	AM WH	470530!
58645C91	IH	471737
58660S	TROS	321460
5867R	JN-MN	472185!
58685D	IH	410059
58685D	IH	470380!
58698	AM WH	450474
5870	C-R	15X38X7
58700	C-R	55392=
58702	TROS	5072
58707	C-R	55392=
5870R	JN-MN	55155*=
58712	C-R	416476!
58715	C-R	416476!
58715TA	TRSCM	416476!
58715TA	TRSCM	417364
58716	C-R	416476!
58736	C-R	416476!
587372	C-R	472020
58741	C-R	416476!*
587416	C-R	417531
587420	C-R	455685
587424	C-R	417538
587424M1	C-R	417538

! Industrial Size/Type * Minor Width Difference

= The U.S. customer service number is 877-4-TIMKEN. The Canadian customer service numbers are 800-565-4927 (English) and 800-565-0438 (French-Canadian).

Mfr. No.	Name	Zero Duplication or Recommended Industrial
5875	SPG	455280
58751	C-R	416476!
587541	CHRYS	5921
587542	CHRYS	55337
58756	C-R	416476!
58760	C-R	455297*
587760	CHRYS	412473!
587778	GMC	472082
5877LA	JN-MN	417780*
5877YK	JOHND	204035
587809R91	IH	472164!
58787	C-R	3016
58787	C-R	456052
587H41-L	C-R	6864S
587W212-L	C-R	5487
5880	C-R	15X40X7
58801S	TROS	7013S
5880LA	JN-MN	450039*
5880LPD	JN-MN	450039*
58821	MASTE	471765!
5883	C-R	15X40X7
5883SS	JN-MN	471526!
58843	MASTE	471571
58846	KELSE	442251
588510A	HARWA	58X85X10
588737R91	IH	472193!
588964	CHRYS	472016
588978C91	IH	417484
589013C	HARWA	58X90X10
589208	CHRYS	472394
5892LPD	JN-MN	410102
589305	CHRYS	473457!
5893B	JN-MN	471868*
5894	FULLE	415995!
589D1	WHITE	472924!
58N1617	WGEAR	472299
58R035	SHOV	415058
58R037	SHOV	55353
58R040	SHOV	417316!
58T002	SHOV	470059
58T002	SHOV	470380!
58T063	SHOV	470059
58T063	SHOV	470380!
58T067	SHOV	417269!
58T082	SHOV	470059
58T082	SHOV	470380!
58T083	SHOV	411376!
58T089	SHOV	415498
58X-1868R3	MACK	442874
58X72X8SC	TRSCM	58X72X8
58X72X8TC	TRSCM	58X72X8
58X75X11SC	TRSCM	58X75X11!
58X75X11TC	TRSCM	58X75X11!
58X80X8SC	TRSCM	58X80X8
58X80X8TC	TRSCM	58X80X8
58X85X10	SIMRT	58X85X10
58X85X10AN(35)	ISP	58X85X10
58X85X13SC	TRSCM	58X85X13
58X85X13TC	TRSCM	58X85X13
58X88X8SC	TRSCM	58X88X8
58X88X8TC	TRSCM	58X88X8
58X90X10	SIMRT	58X90X10
59005	C-R	150X180X12
590062	C-R	456462
59010	C-R	150X180X12*
59010	C-R	150X180X15!
590133	C-R	55239=
59015A	HERCU	473240!
590246	C-R	55223=
5903	EATON	415995!
5903	FULLE	415995!
590312	C-R	455123
59035	ALLCH	417487
590358	C-R	415124
59036	ALLCH	471272!
590448	C-R	455966
590504	C-R	415090
590534	C-R	455462
5905LA	JN-MN	472157
5905LA	JN-MN	472157!
590609	C-R	33X50X12!
59061	C-R	150X180X15!
59061	C-R	150X180X15V!
59063	C-R	150X180X12*
5906LA	JN-MN	418028
5906LA	JN-MN	455137!
590733	C-R	417602!
590734	C-R	455123
590740	C-R	415124
590746	C-R	417022
590751	C-R	417604
590754	C-R	417604
590770	C-R	415128
590780	C-R	455129
590781	C-R	455129
590786	C-R	415090
590787	C-R	415090
590789	C-R	415090
590798	C-R	415219
5907LPD	JN-MN	416865!
590800	C-R	55078S
590816	C-R	417606
590820	C-R	417606
59103051D	AUDI	BS16144
59105H	IH	5M867
5910LA	JN-MN	415034!
5910LPD	JN-MN	415034!*
591135	C-R	455476
5911R	JN-MN	55193=
59120S	TROS	9150S
59121	HYST	416404!
5912756	GMC	471647
591331	CLARK	470530!
591331	GMC	470530!
59134	GRAY	472016
59138	ESSIC	50345=
59140	TROS	411348!
591448	GMC	471341!
59148L	C-R	55333=
5915	NATL	473228
59160S	TROS	203008
591771C91	IH	415483
591829C91	IH	471413
591830C91	IH	471267!
591831C91	IH	470954!
591832C91	IH	471267!
591833C91	IH	470380!
591834C91	IH	482163!
591835C91	IH	470088
591836C91	IH	417484!
591838C91	IH	470954
591843C1	IH	240816
591844C91	IH	471413!
591845C91	IH	473231!
591846C91	IH	710029
591847C91	IH	710021
591896R91	IH	472185!
5919	NATL	200354
591978	C-R	417022
5919S	WMG	204002
5920B	JN-MN	480630!
5922	SPG	455151
592237	C-R	417602!
592358	C-R	417567
592441	GMC	414045!
592480	C-R	417603!
592483	C-R	415128
5925	C-R	471532*
5925SS	JN-MN	481568!*
5926	C-R	471532
5926LA	JN-MN	417254*
5926LUP	JN-MN	417254*
592791	C-R	270X310X16
592860	GMC	414045!
59292195	BUC-E	415196!
593138	C-R	455462
5931LUP	JN-MN	416071*
593256	CHRYS	473464!
593256	CHRYS	473464
593258	CHRYS	410737!
593260	CHRYS	415458!
59328	SPG	470328
59328	SPG	481213!
5933	C-R	471532
5934	C-R	471532
59340	C-R	417780
593467	C-R	415219*
59350	C-R	417780*
59351	C-R	417780*
59352	C-R	417780
593596	CHRYS	410308!
593743	C-R	455462*
59380	C-R	8907
5938LA	JN-MN	415116
593916R91	IH	417492
59395	HYST	415001!
5939LA	JN-MN	417604
594	ROCKW	473231
59401	TROS	5320=
59401D	IH	473010!
594186	C-R	396412=
5943B	JN-MN	450040
594447R91	CASE	471516!
594463-1	SPICE	417191
594463-1	SPICE	455165!
594463-2	SPICE	417191
594463-2	SPICE	455165!
5946	C-R	471532*
594639	Y-T	55353
594672	EATON	415991
594672	EATON	455146!
59468	BUDD	5970=
5947	FULLE	415991
5947	FULLE	455146!
594702R91	CASE	5027
594703R1	CASE	5027
5949	C-R	473405*
594962C1	IH	370003A
594963C1	IH	370023A
594964C1	IH	370048A
594965C1	IH	370150A
594966C1	IH	370124A
594967C1	IH	370131A
5949B	JN-MN	472924!
5950	C-R	473405*
5950	FULLE	417488!
5950B	JN-MN	480630!
595169R91	IH	471272!
595206R91	IH	470380!
59520S	TROS	331107N
59524	MASTE	450593!
59540S	TROS	472354!
5955	C-R	473405
5956	C-R	473405
595638	GMC	470606!
5956LA	JN-MN	455310
5957B	JN-MN	416891!
59586R91	IH	473463
59587	VIC	472179
59587R91	IH	473463
595985	NEHO	713117
5959R	JN-MN	417316!
596	C-R	5M403
596-D2-11	REO	370007A
596-D2-13	REO	370007A
596-D2-14	REO	370007A
596-D2-15	REO	370007A
596-D2-2	REO	370001A
596-D2-39	REO	370057A
596-D2-4	REO	370001A
596-D2-40	REO	370057A
596-D2-45	REO	370057A
596-D2-50	REO	370001A
596-D2-6	REO	370001A
596-D238	REO	370007A
5961	NATL	370036A
59614	ALLCH	416339
59614	ALLCH	455031!
596144C1	IH	713750
59615	ALLCH	415072
5961LA	JN-MN	417349*
5961LUP	JN-MN	417349!
596309C-91	IH	9773
596310C91	IH	416654
596311C91	IH	412473
596312C91	IH	415458
596313C91	IH	712937
596351	CHRYS	472164!
596372C1	IH	417484
5963SH	JN-MN	417267
596430C91	IH	330749V
596430C92	IH	39920
5964A	C-R	416921!
596555C1	IH	370001A
596556C1	IH	370121A
5965R	JN-MN	472144!*
5966	C-R	471558*
59660	TROS	415449
596602C91	IH	473274
596602C91	NAVST	4561V
59660S	TROS	415449
596623	ACF	413246
59675DA	IH	70146=
596D6	WHITE	5408
597	C-R	5M406=
5970	NATL	203034
59701	TROS	5092
59702	TROS	5072
5971	C-R	471558*
597138	ACF	416865!
597147C1	IH	477163N
597324C1	IH	416364!
5973LA	JN-MN	415072*
5974746	FIAT	713031
597546R91	IH	7186S
5976	C-R	471558
59760S	TROS	335924N
597621C1	IH	471271!
597702R91	CASE	5027
5978LA	JN-MN	415196!
597OF60	FRUEH	203034
598	HYST	470059
598	HYST	470380!
5980LA	JN-MN	415128
5983LA	JN-MN	472287!
5984	EATON	417181!
5984	FULLE	417181!
5984	SPG	471526!

! Industrial Size/Type * Minor Width Difference

= The U.S. customer service number is 877-4-TIMKEN. The Canadian customer service numbers are 800-565-4927 (English) and 800-565-0438 (French-Canadian).

Mfr. No.	Name	Zero Duplication or Recommended Industrial
598462	CHRYS	455336
5984LA	JN-MN	471579
5984LPD	JN-MN	471579
5985	C-R	471564
59854	DGASK	17748
59860	TROS	1010=
5986LA	JN-MN	471689!
598794	CHRYS	411253!
5987LA	JN-MN	472843
59881C1	IH	417366!
5988LA	JN-MN	450090
599	ROCKW	471553!
599086	CHRYS	470774!
5991LA	JN-MN	417532*
5991LUP	JN-MN	417532
59920	DGASK	17720
5992SH	JN-MN	470954!
5992SS	JN-MN	470954!*
5993SS	JN-MN	450400
599428M1	C-R	416167!
59946	DGASK	17746
599463	CHRYS	471829
59948	DGASK	17748
59959D	IH	416556!
59959D	IH	472157
5995SH	JN-MN	471532*
59960	DGASK	17760
5996256	FIAT	713059
59980	DGASK	17780
5999	SPG	470625!
59995	DGASK	17795
599957	GE	471255!
59997	C-R	39807
59999	C-R	2297V!
599D6	WHITE	6635S
599HMS422-T8	C-R	417535
59N1617	WGEAR	415991
59N1617	WGEAR	455146!
5A174A	FAIRB	473228
5A374A	FAIRB	472397!
5A43	WHITE	471231!
5A474A	FAIRB	411376!
5A530	CATER	415023
5A574A	FAIRB	417316!
5A809	CATER	471570!
5A810	CATER	471281!
5A874A	FAIRB	471766!
5AL1041	OLIVE	204035
5AL1041	WHITE	204035
5AL1511	OLIVE	6590S
5AL1514	OLIVE	470059
5AL1514	OLIVE	470380!
5AL4950	OLIVE	340815
5B0653	CATER	416666
5B0760	CATER	471747!
5B1224	CATER	473232
5B1395	CATER	415196!
5B2169	CATER	471785!
5B2963	CATER	472636!
5B505	CATER	455566
5B6129	CATER	471785!
5B6365	CATER	450173
5B653	CATER	416666
5B7017	CATER	410694!
5B734	CATER	472164!
5B9332	CATER	472636!
5CM1120	OLIVE	471737=
5CM2023	OLIVE	200354
5D0505	CATER	455566
5D103	CATER	JV1704=
5D1962	CATER	315364=
5D2796	CATER	470328
5D2796	CATER	481213!
5D505	CATER	455566
5D6767	CATER	417247!
5F0549	CATER	411394!
5F1220	CATER	416476!
5F2422	CATER	471766!
5F2463	CATER	455117
5F3178	CATER	415025
5F4258	CATER	471766!
5F4258	WESTR	471766
5F4624	CATER	472016
5F5422	CATER	471766!
5F549	CATER	411394!
5F5797	CATER	472179
5F5798	CATER	450307
5F7730	CATER	417546!
5F7731	CATER	415072
5H0033	CATER	415001
5H1190	CATER	471466!
5H2184	CATER	472705!
5H3789	CATER	472164!
5H3792	CATER	411376!
5H4742	CATER	470380!
5H4856	CATER	240736
5H4894	CATER	416865
5H4904	CATER	416476
5H5021	CATER	471689!
5H5241	CATER	471554!
5H572	CATER	472397!
5H5879	CATER	417621!
5H6012	CATER	471766!
5H6012	TMTR	471766!
5H6012	WESTR	471766!
5H6136	CATER	7840S
5H6406	CATER	313043*=
5H7628	CATER	471554!
5H9753	CATER	470334!
5J3620	CATER	710042
5J3868	CATER	415437
5J3937	CATER	40433S
5J3942	CATER	447060
5J3944	CATER	417596
5J8200	CATER	710040
5J8225	CATER	710041
5J964	CATER	710034
5J9969	CATER	417349
5K0658	CATER	417316!
5K0983	CATER	417210!
5K2595	CATER	415995!
5K658	CATER	417316!
5K983	CATER	417210!
5L4757	CATER	415146!
5L4757	CATER	415991
5L4776	CATER	471271!
5L5885	CATER	456030N*=
5L8925	CATER	471766!
5LT1520	MINNM	417433
5LT1520	OLIVE	417433
5LT1534	OLIVE	473214!
5LT1547	OLIVE	471870!
5M0278	CATER	417487!
5M0278	CATER	417487
5M278	CATER	417487!
5M278	CATER	417487
5M9734	CATER	471649!
5M9735	CATER	471787!
5M9736	CATER	472287!
5M9737	CATER	473229
5M9738	CATER	472164!
5M9739	CATER	473462
5M9740	CATER	411253!
5N4779	CATER	470605!
5NH20	GEM	471689!
5NH20	ROSS	471689!
5P-1884	CATER	330699
5P0547	CATER	471442!
5P0711	CATER	471526!
5P0713	CATER	417350
5P0796	CATER	330699
5P1072	CATER	493524
5P1412	LETN	471750!
5P1415	ADAMS	471750!
5P1415	WABCO	471750!
5P1435	ADAMS	470530!
5P1436	ADAMS	473215!
5P1436	WABCO	473215!
5P1502	ADAMS	476838!
5P1502	LETN	476838!
5P1555	ADAMS	455008
5P1713	CATER	471192
5P1788	ADAMS	473238
5P1788	LETN	473238
5P3118	CATER	471195=
5P3262	CATER	472572!
5P3412	CATER	471764!
5P4251	CATER	416919
5P4258	CATER	415458
5P5299	CATER	417172
5P547	CATER	471442!
5P6780	CATER	473416
5P6859	CATER	7188S
5P6860	CATER	471413=
5P6868	CATER	415196!
5P7003	CATER	417603!
5P7032	CATER	3894V
5P713	CATER	417350!
5P7608	CATER	415449!
5P769	ADAMS	415001!
5P796	CATER	330699
5P8216	CATER	7188S
5P8450	CATER	456483*=
5P854	ADAMS	470334!
5P9294	CATER	471442
5P9440	CATER	471554
5R2218	CATER	240698
5S2106	CATER	472653
5S4408	CATER	415007*
5S4408	CATER	417483
5S4433	CATER	446631=
5S6296	CATER	3813
5S6620	CATER	482230N
5S6622	CATER	482230N
5S9022	CATER	2628!
5T1012	HU-WR	473016!
5T1013	HU-WR	472157!
5T1013	HU-WR	472157
5T1014	HU-WR	472439
5T1015	HU-WR	417191
5T1015	HU-WR	456585
5T1220	HU-WR	416332!
5T1225	HU-WR	415196!
5T1228	HU-WR	415074
5X1034	ROCKW	OK1034
5X7501	CATER	415116
5X9263	CATER	471760
5Y158	FED	5408
5Y203	FED	5401
5Y204	FED	5403
5Y205	FED	5405
6-3007	SPICE	442380
6-PS221	C-P	472492!
6-SPC22	NOVO	472179
60-04617	B-L-H	415035
60-04617	B-L-H	415035!
60-42213	B-L-H	471231!
60-463-10-1X	SPICE	39925
600	UNIVE	415072*
600-501-317A	VW	370047A
60000	C-R	2297V!
60000	C-R	39807
6000029	GWI	473228!
60001	VIC	350364
600016	WAYNE	473227!
600017	WAYNE	471224!
600017C	SPG	600017
600027C	SPG	600027
60003	C-R	417365
60003LDS	JN-MN	417507
60004	C-R	417365
600045C	SPG	600045
600047C	SPG	600047
600048C	SPG	600048
600050	SPG	600050
600056C	SPG	600056
600058C	SPG	600058
60006	C-R	415683
600062C	SPG	600062
600063C	SPG	600063
600067281	LUF	473463
600069	ACF	471224!
600071C	SPG	600071
600072C	SPG	600072
60008	C-R	415072*
600085C	SPG	600085
600091V	SPG	600091
600092C	SPG	600092
60010	C-R	415072*
60010	VIC	471103!
600103C	SPG	600103
60011	C-R	415072*
600112C	SPG	600112
600116C	SPG	600116
600121C	SPG	600121
600123C	SPG	600123
600129C	SPG	600129
60013	VIC	471579
600139	ACF	471224
60014	VIC	50010
600141C	SPG	600141
6001465	CLARK	415725!
60015	C-R	415072
600150C	SPG	600150
600157C	SPG	600157
60015LDS	JN-MN	417556
60016	C-R	415072*
600164C	SPG	600164
600166C	SPG	600166
600167C	SPG	600167
600168C	SPG	600168
600170C	SPG	600170
600178C	SPG	600178
600182C	SPG	600182
600189	SPG	600189
6001904	CLARK	472924!
600197	DENCO	472636!
6001LA	JN-MN	473231
600203C	SPG	600203
600204C	SPG	600204
6002061	CLARK	415294!
6002077	CLARK	416865!
6002085	CLARK	455129
600208C	SPG	600208
6002098	CLARK	417606
6002105	CLARK	416476!
600210C	SPG	600210
600212C	SPG	600212

! Industrial Size/Type * Minor Width Difference

= The U.S. customer service number is 877-4-TIMKEN. The Canadian customer service numbers are 800-565-4927 (English) and 800-565-0438 (French-Canadian).

Mfr. No.	Name	Zero Duplication or Recommended Industrial
6002155	CLARK	472157!
6002155	CLARK	472157
600218C	SPG	600218
600219C	SPG	600219
600230	CHRYS	5711
600231	CHRYS	471141!
600231C	SPG	600231
60024	DURA	473236!
6002436	CLARK	415124
6002437	CLARK	417567
6002442	CLARK	55228=
60025	C-R	415072*
600253C	SPG	600253
600256C	SPG	600256
60025LDS	JN-MN	473243
60026	C-R	415072*=
60026LDS	JN-MN	473235!
60027	C-R	415072*
6002724	CLARK	455462
6002730	CLARK	470605!
60028	C-R	415072*
600280C	SPG	600280
600281C	SPG	600281
600284C	SPG	600284
600286C	SPG	52X80X10
600287C	SPG	600287
600288C	SPG	53X68X10
60029	C-R	415072
6002LA	JN-MN	415991
6002LA	JN-MN	455146!
60030	C-R	415072
60030	VIC	50199S!
60030	VIC	6863S!
600300C	SPG	600300
600301C	SPG	600301
600304C	SPG	600304
60031	C-R	415072
6003117	CLARK	415196!
600317C	SPG	600317
600319	SPG	5645
60032	C-R	415072
600323C	SPG	600323
60033	VIC	474277
600332C	SPG	600332
600337	SPG	600337
600343C	SPG	600343
600357	SPG	5288
600357C	SPG	600357
600361C	SPG	600361
600370	SPG	5290
6004	C-R	417509
600408C	SPG	600408
60041	VIC	470004!
600410	C-R	416144
600410M1	C-R	416144
600412	C-R	416149
600412M1	C-R	416149
600414	C-R	417526
600414M1	C-R	417526
600416	C-R	416154!
600416M1	C-R	416154!
600418	C-R	417534
600420	C-R	416158
600420M1	C-R	416158
600421	CHRYS	471821!
600422	C-R	417535
600424	C-R	417247!
600424M1	C-R	417247!
600426	C-R	416163
600426M1	C-R	416163
600428	C-R	416167!
600428	MINMA	416167!
600428M1	C-R	416167!
600430	CLARK	417539!
600430	MINMA	417539!
60044	C-R	455203
60044404	TROS	45637S
600445C	SPG	600445
60044808	TROS	200642
60044813	TROS	57248
60044M1	C-R	455203
60045609	TROS	416167!
60045610	TROS	416167!
60046	C-R	417515
60046010	TROS	417539!
60048	C-R	416137
60048M1	C-R	416137
6004A	C-R	472258
6004M1	C-R	417509
6005	C-R	415725!
60050013	TROS	415725!
600509C	SPG	600509
60051	VIC	471442!
600510	ACF	473229
600511	ACF	471785!
600512	ACF	472826!
600513	ACF	471141!
600514C	SPG	600514
6005189	CLARK	415645!
6005189	CLARK	455104
6005191	CLARK	416888!
6005197	CLARK	416229
60052	VIC	471526!
600520C	SPG	600520
6005418	CLARK	416239!
6005432	CLARK	340413
6005435	CLARK	415072
6005439	CLARK	340927
6005507	CLARK	415551
6005552	CLARK	340356
6005616	CLARK	415036
60057	VIC	471472!
6005838	CLARK	417020
6005839	CLARK	415001!
6005841	CLARK	455584
6005842	CLARK	417273
6005844	CLARK	416666
600590J	SPG	712134
6005M1	C-R	415725!
60060	VIC	471549!
600604	DENCO	473214!
6006286	CLARK	416077
6006365	CLARK	340787
600652C	SPG	600652
60067	VIC	471530
600750	MICH	415072*
600750	UNIVE	415072*
600755E	SPG	3771
60076	VIC	472705!
600766C	SPG	224052
600768C	SPG	600768
60078	VIC	471281!
60079	VIC	471281!
600796C	SPG	600796
600797C	SPG	600797
6007LA	JN-MN	471760*
6007LUP	JN-MN	471760
60080	VIC	471535!
60082	VIC	471551!
60087	VIC	471532
60089	VIC	473405
6008R	JN-MN	471737*
60090	C-R	415072*
60091	VIC	471558
60096	VIC	471466!
600988	CATER	455019!
600A40010	TROS	417509
600A44810	TROS	417247!
600C5	C-R	415725!
600FM424	C-R	417247!
600G422	C-R	45637S
600HD422	C-R	45637S
600HD422-T8	C-R	45637S
600HD426	C-R	345214=
601	DEXTR	J1110=
60101	VIC	471255!
60101S	TROS	370015A
60102S	TROS	7537S
60103	TROS	5113
60103	TROS	7721!
601032	SPERY	415991
601032	SPERY	415991!
601033	CATER	417509
601033	SPERY	455134!
601034	SPERY	417349!
60104	TROS	8243
60105	TROS	205044
60106	TROS	8976S
60106	VIC	481073
60107	TROS	418028
60109	VIC	471538!*
601093	O-M	254270
60111	COC	471553!
60111	VIC	471553!
60113	VIC	471579
60117	CATER	471529
60118	VIC	50026
60120	TROS	7994S
60128	VIC	480821!
60132	ALLCH	415146!
60132	ALLCH	415991
60135	VIC	471554!
601356F	OLIVE	470774!
60137	VIC	471567!
60139	VIC	471498*
6013SS	JN-MN	473473
60140	TROS	41257!
60142	VIC	471684!
60144	VIC	450033
60149	VIC	481443!
6014SH	JN-MN	471763
60151	VIC	481568!
60153	VIC	481644
60157	VIC	474273
60162	VIC	471231!
60166	VIC	474253
60168	VIC	471645
601684	DENCO	416664!
601686	DENCO	416664!
60170	VIC	471686
60172	VIC	473412
601748	DENCO	417247!
601758	CLARK	472179
60177	VIC	473413
60179	VIC	473414
6017SS	JN-MN	40494S
6018	HYST	417492
60183	VIC	473415
601872	ALLCH	471733
60192	VIC	471267!
601927	DENCO	473237!
60193	VIC	450398
60193	VIC	471267!
60196	VIC	471570!
60199	VIC	471633!*
602	UNIVE	457874
60200	VIC	471646!
60201S	TROS	5573
60202	VIC	470590
60203	TROS	2055
60204	VIC	471137
60217	VIC	450038
60220	TROS	451182
60222	VIC	471571
60224	VIC	471647
60226	VIC	472951
60226	VIC	474252
60228	VIC	450039
60233	VIC	451583!
60235	VIC	471648
60237	VIC	471688
602376	ALLCH	473437
60239	VIC	450040
60242	VIC	472311!
60245	VIC	471224!
602463	ACF	471103!
60247	VIC	471649!
6025	SPG	415437
60250	VIC	471689!
60252	VIC	450593!
60254	VIC	471733
60254D	IH	411394!
60256	VIC	471744!
60258	GWI	471760
60258	VIC	471760*
60260	VIC	471760
602632	LAWN	254287
602632	O-M	254287
60265	VIC	50209
60267	VIC	481650
6027	SPG	471413
6028	EDELM	25598
60282	VIC	480210!
60284	VIC	471651
60285	VIC	470606!
60286	VIC	471705!
602862	DENCO	471570!
60288	VIC	473419
6028LA	JN-MN	471231!
60290	VIC	471735
60294	VIC	450342
60295	VIC	471762!
60296	VIC	471762!
602960	LAWN	240733
602960	O-M	240733
603	DEXTR	J1122
603000	ALLCH	455008
603001	ALLCH	471554!
603002	ALLCH	476838!
603003	ALLCH	471750!
603006	ALLCH	471224!
603007	ALLCH	471795
6030076	ALLCH	471795
603008	ALLCH	471763
603009	ALLCH	471570!
60301	VIC	450044
603010	ALLCH	471649!
60301S	TROS	370021A
60309	VIC	450159
603101	LAWN	471267!
603101	O-M	471267!
60314	VIC	472560N!
603158	GMC	6936S
60318	COC	476838!
60318	VIC	476838!
60319	VIC	350974!
60320	VIC	470712!
60322	VIC	471747!

! Industrial Size/Type * Minor Width Difference

= The U.S. customer service number is 877-4-TIMKEN. The Canadian customer service numbers are 800-565-4927 (English) and 800-565-0438 (French-Canadian).

Mfr. No.	Name	Zero Duplication or Recommended Industrial
603226	ACF	**472311**!
603235	LAWN	340771
603235	O-M	340771
60324	VIC	**471763**
60325	VIC	**472644**
60326	VIC	**471785**!
603289	LAWN	**254270**
603289	O-M	**254270**
60329	VIC	450044*
603290	LAWN	340815
603290	O-M	340815
60331	VIC	473428*
60333	VIC	**471764**!
60335	VIC	**473427**
60340	VIC	483054N
60346	VIC	**472475**
603462	ALLCH	**473016**!
60347	VIC	**473426***
60349	VIC	**471765**!
60351	VIC	453063
60353	VIC	**471354**!
60357	VIC	**473205**
60359	VIC	**474254**
60373	VIC	**450173**
6038	SPG	**474264**
60382	OLIVE	**472924**!
60382	VIC	**474278**!
60386	VIC	**471750**!
60388	AM HO	**471766**!
60388	CARVR	**471766**!
60388	VIC	**471766**!
60390	VIC	**471787**!
603914	ACF	**471413**
60392	VIC	**471787**!
603932C91	IH	**417196**!
603933C91	IH	**416921**!
60394	VIC	450177
60395	VIC	**471795**
60396	VIC	**471795**
60398	VIC	450165
60398	VIC	**471801**!
603VB7	MARI	**415072**
604	UNIVE	**417562**
60402S	TROS	**471193**
60403	VIC	470050*
60405	VIC	**473424**!
604058	JEFF	470059
604058	JEFF	**470380**!
604066	WHELA	**473010**
60407	VIC	450124=
6040LUP	JN-MN	**417493**
6041LA	JN-MN	**416654**!
60420	TROS	7457N
60421	GMC	**481644**
60421	VIC	450129
60421	VIC	**472826**!
60423	VIC	**473421**
60425	VIC	**473211**!
60427	VIC	**473212**!
60429	VIC	40769S
6042SS	JN-MN	**415303**!
60431	VIC	**473213**!
60434	OLIVE	470059
60434	OLIVE	**470380**!
60436	VIC	473435
604372	ALLCH	**471766**!
60438	VIC	473436
60438D	IH	**473245**!
6043LA	JN-MN	**415303**!*
60440	TROS	**473235**
60442	VIC	450054
604420	VICK	203012
604439	ALLCH	**473228**!
604468	CUSH	**471267**!
604468	O-M	**471267**!
604471	CUSH	**471466**!
604471	LAWN	**471466**!
604471	O-M	**471466**!
604479	ALLCH	**417351**!
60449	VIC	**472258***
6044B	JN-MN	**471529**
60450	VIC	**470774**!
60451	VIC	**470774**!
60452	VIC	**472287**!
60454	IH	**471192**
60454	VIC	**471192**
60454D	IH	**471192**
604557	ALLCH	**473228**
60456	VIC	**473214**
60458	VIC	**473215**!
60459	VIC	**473215**!
60462	VIC	470950!
60462	VIC	6241S
60463	VIC	**471835**!
604634	SPICE	**417316**!
604634-1	SPICE	**417316**!
604634-2	SPICE	**417316**!
604634-3	SPICE	**417316**!
604635	SPICE	**415995**!
604636	SPICE	100495
604636	SPICE	**417349**
604636-1	SPICE	100495
604636-1	SPICE	**417349**
604637	SPICE	**415995**!
604638	SPICE	**417316**
604638-1	SPICE	**417316**!
60464	VIC	**450776**!
60465	VIC	**473197**
60473	VIC	50254=
60476	VIC	**473224**!
604762	UNIVE	**457874**
604763	MICH	**457874**
60478	AM HO	**473016**!
60478	VIC	**473016**!
60480	VIC	**473225**!
60484	AM HO	**474264**
60484	VIC	**474264**
60485	VIC	**471862**
604866100	EATON	50209
60489	VIC	**473438**
6048R	JN-MN	**472150**
60492	GRAY	**476470**
60493	GRAY	**416339**
60493	GRAY	455031!
60493	VIC	**473439**!
60494	VIC	**474276**!
60497	VIC	**453065**
604973	ALLCH	**416888**!
604973	ROCKW	**416888**!
604974	ALLCH	455375=
604974	ROCKW	455375=
60498	VIC	**470625**!
604986	ALLCH	**415458**!
6049C	DIA	370036A
604A42410	TROS	370030A
6050-101-2	TRMBL	**416158**
60500	CLARK	470059
60500	CLARK	**470380**!
60500	VIC	470059
60500	VIC	**470380**!
60500516	ALFAR	713001
60502S	TROS	**471341**!
60503646	ALFAR	713011
60504	VIC	**471820**
60506	VIC	**473228**
60507107	ALFAR	223520!
605093	ALLCH	450311
60510	VIC	**410190**
60511	VIC	**473440**
60512	VIC	**474281**!
605133	ALLCH	**470682**
60513394	ALFAR	713018
60515781	ALFAR	713006
60516684	ALFAR	713014
60517110	ALFAR	228480
6051B	JN-MN	**450090***
60520S	TROS	7399S!
60521230	ALFAR	713010
60521293	ALFAR	713013
60521S	TROS	**473214**
60522	TROS	**480210**!
605249	ALLCH	**472164**!
60524D	IH	**411394**!
60530	VIC	**472299***
60531	VIC	**472299**
60532	VIC	**471821**!
60534	VIC	**471827***
60536	VIC	**473229**
60537	VIC	**450143**
60538	VIC	**470682**
60539	VIC	**471316**
6053B	JN-MN	**450133***
60540	VIC	**471316**
60540S	TROS	**474260**
60541	VIC	450803*
60541R	TROS	331228H
60542	VIC	**473441**
60543	VIC	**473442**!
60549	VIC	**450065**
60551	VIC	**482253**
60553	VIC	451469
60555	VIC	450274
60556429	ALFAR	713017
605582A	WHITE	455197N
60560701	ALFAR	713007
60562	VIC	**473231**
60564	VIC	**473367**
60564	VIC	**473367**!
60567607	ALFAR	713015
60568	VIC	**473010**
605686	GMC	**471231**!
60569298	ALFAR	713012
60569304	ALFAR	713009
6056LA	JN-MN	**473010**
6056LUP	JN-MN	**473010**
60570	VIC	**473232**
60572	VIC	**481864**
60574	AM HO	**474274**
60574	VIC	**474274**
6057LA	JN-MN	**473010**
60580	VIC	**473444**
60581	VIC	**414268**!
605816	GMC	**473215**!
605823	GMC	**450593**!
60583	VIC	450335*
605836	GMC	**471224**!
60584	VIC	450467
60585	VIC	450260
60589	VIC	450073
605898	ALLCH	**471224**!
605898	ROCKW	**471224**!
605D6	WHITE	5401
605VB7	MARI	**417596**
606	C-R	5M445
606	UNIVE	**417563**
606-D831	BENDI	**415035**
606-D831	BENDI	**415035**!
60603	BL-KN	**473234**
60603	VIC	**473234**
606034C91	IH	417267
60605	VIC	**473235**!
60607	VIC	**474265**
606072C91	IH	417267
60608	VIC	**450765**!
60609	AM HO	**473236**!
60609	VIC	**473236**!
6061084	WHITE	**471272**!
606147	ALLCH	442380
60615	VIC	**473446**
60617	VIC	470086
606185C91	IH	**416107**!
606185C91	IH	455073
60620	VIC	50327*
60620S	TROS	**473237**
60622	VIC	**450068**
606230	CHRYS	5711
606237C91	IH	**471442**!
60624	VIC	50075=
60624D	IH	**418029**!
60625D	IH	**455500**
60626	VIC	50191
606293R92	IH	**411245**!
60632	VIC	50081
60635	VIC	**450400***
60638	VIC	**472164**!
6064	SEAMA	**472636**!
60640	VIC	**472164**!
60640S	TROS	3095
60641	VIC	**472185**!
60642	VIC	**472193**!
60643	VIC	**472185**!
60644	VIC	**470334**!
60645	VIC	**470334**!
60646	VIC	**472179**
606469R91	IH	200881
60648	VIC	**473447**
6064LA	JN-MN	**417542**
6065	SPG	**413478**
606535C91	IH	456055V=
60655	VIC	**471141**!
60656	VIC	**471141**!
606567C1	IH	JX1137=
606568C91	IH	**416557**
606568C92	IH	**416557**
60660	VIC	**473313**
60663	VIC	**470088***
606660C91	IH	**415995**!
606676C1	IH	JX1252=
606677C91	IH	**470774**!
60668	VIC	6936S
60671	VIC	50266
60673	VIC	450269
60675	VIC	450285
606750C91	IH	**412119**!
606751C91	IH	**471766**!
606752C91	IH	**471766**!
606778C91	IH	**417344**!
606778C92	IH	**417344**!
606778C93	IH	**417344**!
606779C1	IH	J1515=
606779C2	IH	JX1576=
6068	SEAMA	**473016**!
60683	VIC	450089*
60688	VIC	**472070**
606892C91	IH	416287
606892C91	IH	**416288**!
60690	VIC	**471866**!
606908	ALLCH	**471785**!

! Industrial Size/Type * Minor Width Difference

= The U.S. customer service number is 877-4-TIMKEN. The Canadian customer service numbers are 800-565-4927 (English) and 800-565-0438 (French-Canadian).

Mfr. No.	Name	Zero Duplication or Recommended Industrial
606910	ALLCH	472185!
606911	ALLCH	470625!
606912	ALLCH	417082
606914	ALLCH	412861
606917	ALLCH	415683
606919	ALLCH	473228
60692	VIC	473449
606920	ALLCH	416339
606920	ALLCH	455031!
60698	VIC	473450
6069SS	JN-MN	472705!
606VB7	MARI	417562
606W412-L	C-R	6635S
607	BUTBN	40337S
60700	VIC	450090*
60708	VIC	473451!
60712	VIC	473452
607143R91	IH	472164!
607152R91	IH	473215!
607154R91	IH	473426
60718	VIC	473453
6071LA	JN-MN	412119!
60720	TROS	5390
607208B	HARWA	60X72X8
60725	VIC	472439
60727	VIC	471868*
60728	VIC	471868
6072LA	JN-MN	455191
6072LUP	JN-MN	455191
60730	VIC	472572!
60732	VIC	473179!
60734	VIC	414045!
60735	VIC	473238!
60736	VIC	473238
6073LA	JN-MN	417487
6073LUP	JN-MN	417487
60740	TROS	5576
60740	VIC	450084!
60741	TROS	5095
60742	VIC	473239
60744	VIC	473457!
60745	VIC	473240!*
60746	VIC	473458!*
60749	VIC	410524
607498	GMC	472016
607538	GMC	417316!
60755VTA	TRSCM	415072
607569	GMC	470530!
607589	GMC	415449!
607590	CLARK	415449!
60766	VIC	473459
60767	VIC	472144!
607670	GMC	415449!
6076861	BENDI	471747!
60771	VIC	472394
60773	VIC	473461!
60773	VIC	65X85X10
60775	VIC	471391!
60777	VIC	473462
60781	VIC	450446*
60782	JAE	472492!
60782	MASSE	472492!
60782	VIC	472492!
60786	VIC	472924!
607861R91	IH	471341!
607862R91	IH	476838!
60787	BL-KN	472924!
60787	VIC	472924!
60790	VIC	470530!
60791	GRAY	472951
60791	GRAY	474252
60794	VIC	472397!
60796	VIC	473463*
60798	VIC	473242
607A	BUTBN	40337S
607VB7	MARI	455121
608	UNIVE	416229
60800	VIC	473464!
60800	VIC	473464
60801	GRAY	473423
60801S	TROS	471538
60802	VIC	410102
60805219	ALFAR	713003
60806372	ALFAR	713002
60808	VIC	5877*
6081	SPG	412871!
60810	VIC	472012
60812	VIC	450307
60814	VIC	450311
60815	GRAY	450400
60816	VIC	416738!
60816	VIC	450096
60817	VIC	416738!
60817	VIC	450096
60819	VIC	450313
6081SS	JN-MN	410308!
6081SS	JN-MN	473468
6082	SPG	473473
60827	VIC	470898
60829	VIC	453066
60829	VIC	470898!
60833	VIC	473467
60834	VIC	472015!
608343	GMC	471760
60835	GRAY	471466!
60835	VIC	472015!
60837	VIC	410308!
60839	VIC	472016
6084	NATL	353141!
60841	VIC	472409!
60843	VIC	473243
60845	VIC	413469!
60845610	TROS	417267
60845R91	IH	415449!
6084LA	JN-MN	471224!
6084LUP	JN-MN	471224!
60853	VIC	473471*
60856	VIC	470354
60858	VIC	473245!
608586	CLARK	472185!
6085LA	JN-MN	415066
6085LPD	JN-MN	415066
6086	PETTI	415988
60861	VIC	412943*
60862	VIC	473471
60863	VIC	471341!
60864	VIC	471272!
60866	VIC	473473
60867	VIC	410737!
60868	VIC	472636!
60868N	VIC	472636!
6086LA	JN-MN	415090
60870	VIC	411253!
60872	VIC	412920!
608722	GMC	471224!
60873	VIC	455136
60875	VIC	411376!
60877	VIC	415234!
608775	MICH	417562
608775	UNIVE	417562
60879	VIC	55337
60883	VIC	411394!
608839	VICK	471224!
60885	VIC	411394!
60887	VIC	410694!
60889	VIC	416444
6088LA	JN-MN	471760
60893	VIC	413246
60894	VIC	412119!
60895	VIC	410987!
60895	VIC	450686
60896	VIC	410987!
60897	VIC	416271!*
60898	BU-SP	416271!
60898	VIC	416271!
608VB7	MARI	416229
60901	TROS	470954!
609010A	HARWA	60X90X10
60902	AM HO	411500
60902	VIC	411500*
60903	AM HO	450104
60903	VIC	450104
60905	AM HO	411245!
60905	VIC	411245!
60907	VIC	417073*
60911	VIC	471271!
60913	VIC	410496!
60914	VIC	470605!*
60918	VIC	415449!
6091LA	JN-MN	416107!
6091LA	JN-MN	455073
60920	VIC	415001!
60922	VIC	416273!
60925	VIC	415302
60926	VIC	455280
60927	VIC	415988
60928	VIC	411330!
609289	WHELA	415072
60929	VIC	415483!
6093	NATL	471442!
60930	VIC	412871!
60931	AM WH	473367!
60931	AM WH	473367
60932	VIC	415458!
60934	VIC	417343!
60935	GRAY	450457
60936	VIC	415007
6093SH	JN-MN	471466*
6093SS	JN-MN	471466!
60943	VIC	455151
60945	VIC	455008
60949	VIC	416664!
60950	VIC	457291
609510A	HARWA	60X95X13
60952	VIC	415984!*
60953	VIC	417316!
60954	VIC	417316!
60956	VIC	415960!
60961	VIC	455005
60963	VIC	417485
609638A	WHITE	470898
60964	VIC	2081
60968	VIC	417344!
6096LA	JN-MN	472636!
60970	VIC	417158!
60972	VIC	416921!
60974	VIC	417134
60975	VIC	416921!
60979	VIC	416654!
60981	VIC	417486
60986	VIC	415995!
60987	VIC	415995!
60988	VIC	415995!
60991	VIC	417351!
60993	VIC	417487
60996	VIC	415088
60996	VIC	415088!
60997	VIC	455019!
60998	AM WH	471760
60998	VIC	415088!
60998	VIC	477163N
609VB7	MARI	417298
60DD20	GR-DV	473230!
60DD64	GR-DV	417254
60DD83	GR-DV	417172
60DD92	GR-DV	473239
60G1	GR-DV	416921!
60G10	GR-DV	415025
60G100	GR-DV	415034!
60G103	GR-DV	415960
60G104	GR-DV	417487
60G105	GR-DV	417487
60G106	GR-DV	418029!
60G107	GR-DV	415027
60G107	GR-DV	415027!
60G108	GR-DV	471570!
60G109	GR-DV	417546!
60G11	GR-DV	416077
60G110	GR-DV	471466!
60G111	GR-DV	474278!
60G112	GR-DV	470334!
60G112	GR-DV	50289
60G113	GR-DV	470590
60G114	GR-DV	471766!
60G116	GR-DV	470334!
60G118	GR-DV	415302
60G12	GR-DV	417298
60G120	GR-DV	471192
60G121	GR-DV	473205
60G122	GR-DV	40301S
60G123	GR-DV	40301S
60G124	GR-DV	472157!
60G124	GR-DV	472157
60G125	GR-DV	472810!
60G125199	GR-DV	415227!
60G125200	GR-DV	417298
60G125201	GR-DV	415196!
60G125202	GR-DV	415090
60G128	GR-DV	450111
60G13	GR-DV	416666
60G130	GR-DV	471760
60G131	GR-DV	471652
60G132	GR-DV	473224!
60G133	GR-DV	340771
60G134	GR-DV	450457
60G135	GR-DV	450165
60G135	GR-DV	471801!
60G14	GR-DV	412119!
60G141	GR-DV	416239!
60G142	GR-DV	417603!
60G145	GR-DV	470328
60G145	GR-DV	481213!
60G15	GR-DV	417316!
60G150	GR-DV	455005
60G151	GR-DV	415960!
60G152	GR-DV	472144!
60G155	GR-DV	415988
60G157	GR-DV	417343!
60G16	GR-DV	417269!
60G162	GR-DV	476470
60G164	GR-DV	411253!
60G17	GR-DV	415645!
60G17	GR-DV	455104
60G171	GR-DV	415124
60G177	GR-DV	455129
60G18	GR-DV	470059
60G18	GR-DV	470380!
60G186	GR-DV	415116

! Industrial Size/Type * Minor Width Difference

Mfr. No.	Name	Zero Duplication or Recommended Industrial
60G187	GR-DV	415219
60G188	GR-DV	471442!
60G19	GR-DV	416288!
60G2	GR-DV	416339
60G2	GR-DV	455031!
60G20	GR-DV	416229
60G203	GR-DV	415035
60G21	GR-DV	415023
60G217	GR-DV	415088!
60G217	GR-DV	415088
60G22	GR-DV	472179
60G220	GR-DV	415023
60G221	GR-DV	476470
60G222	GR-DV	416556!
60G222	GR-DV	472157
60G224	GR-DV	417366!
60G226	GR-DV	472015!
60G227	GR-DV	473232!
60G228	GR-DV	415088
60G228	GR-DV	415088!
60G229	GR-DV	472397!
60G23	GR-DV	473245!
60G230	GR-DV	415449!
60G236	GR-DV	471413!
60G238	GR-DV	455134!
60G239	GR-DV	473245!
60G24	GR-DV	471750!
60G242	GR-DV	415551
60G244	GR-DV	417172
60G246	GR-DV	470059
60G246	GR-DV	470380!
60G247	GR-DV	473231
60G25	GR-DV	457874
60G250	GR-DV	471413
60G251	GR-DV	415483!
60G252	GR-DV	470334!
60G252	GR-DV	50289
60G254	GR-DV	417316!
60G258	GR-DV	415984!
60G259	GR-DV	415198
60G26	GR-DV	416865!
60G27	GR-DV	476470
60G28	GR-DV	416476!
60G29	GR-DV	415072
60G3	GR-DV	415458!
60G30	GR-DV	416888!
60G31	GR-DV	416271!
60G32	GR-DV	476470
60G33	GR-DV	417567
60G34	GR-DV	470059
60G34	GR-DV	470380!
60G35	GR-DV	472397!
60G36	GR-DV	417211!
60G38	GR-DV	473460
60G39	GR-DV	417191
60G39	GR-DV	456585
60G4	GR-DV	415995!
60G40	GR-DV	411245!
60G41	GR-DV	415449!
60G42	GR-DV	450274
60G43	GR-DV	417602!
60G44	GR-DV	417604
60G45	GR-DV	472179
60G46	GR-DV	470682
60G47	GR-DV	450165
60G47	GR-DV	471801!
60G48	GR-DV	474265
60G49	GR-DV	472394
60G5	GR-DV	416339
60G5	GR-DV	455031!
60G50	GR-DV	472016
60G51	GR-DV	473225!
60G52	GR-DV	472179
60G53	GR-DV	472924!
60G54	GR-DV	411245!
60G55	GR-DV	416654!
60G56	GR-DV	416288!
60G57	GR-DV	415995!
60G58	GR-DV	417196!
60G59	GR-DV	417205!
60G6	GR-DV	415058
60G60	GR-DV	416891!
60G61	GR-DV	474264
60G62	GR-DV	472179
60G63	GR-DV	415187
60G64	GR-DV	413469!
60G65	GR-DV	413469!
60G66	GR-DV	415349
60G69	GR-DV	470806
60G7	GR-DV	415138!
60G70	GR-DV	472185!
60G71	GR-DV	472016
60G72	GR-DV	474274
60G73	GR-DV	415991
60G73	GR-DV	455146!
60G8	GR-DV	470530!
60G83	GR-DV	417191
60G84	GR-DV	417210!
60G85	GR-DV	471705!
60G86	GR-DV	472572!
60G87	GR-DV	417366!
60G88	GR-DV	455151
60G89	GR-DV	417351!
60G9	GR-DV	411253!
60G90	GR-DV	417621!
60G91	GR-DV	470334!
60G91	GR-DV	50289
60G92	GR-DV	415021
60G95	GR-DV	470334!
60G95	GR-DV	50289
60G96	GR-DV	472397!
60G97	GR-DV	473245!
60G9763	GR-DV	415090
60G9764	GR-DV	417298
60G9765	GR-DV	415196!
60G98	GR-DV	470059
60G98	GR-DV	470380!
60G99	GR-DV	416288!
60J175	GR-DV	415294!
60N1617	WGEAR	471224!
60X100X10SC	TRSCM	60X100X10
60X100X10TC	TRSCM	60X100X10
60X110X8SC	TRSCM	60X110X8
60X110X8TC	TRSCM	60X110X8
60X171	GR-DV	415124
60X72X8	FORSH	60X72X8
60X72X8	SIMRT	60X72X8
60X72X8SC	TRSCM	60X72X8
60X72X8TC	TRSCM	60X72X8
60X75X8SC	TRSCM	60X75X8
60X75X8TC	TRSCM	60X75X8
60X80X8SC	TRSCM	60X80X8!
60X80X8TC	TRSCM	60X80X8!
60X82X12SC	TRSCM	60X82X12!
60X82X12TC	TRSCM	60X82X12!
60X82X7ASN	ISP	60X82X7
60X85X8SC	TRSCM	60X85X8
60X85X8TC	TRSCM	60X85X8
60X90X10	FORSH	60X90X10
60X90X10	SIMRT	60X90X10
60X90X10SC	TRSCM	60X90X10
60X90X10TC	TRSCM	60X90X10
60X90X8SC	TRSCM	60X90X8
60X90X8TC	TRSCM	60X90X8
60X95X13	SIMRT	60X95X13
60X95X8SC	TRSCM	60X95X8
60X95X8TC	TRSCM	60X95X8
61-A2652	BENDI	415035!
61-A2652	BENDI	415035
610	UNIVE	417298
61002	VIC	55155=
61004	VIC	455015
6100B	JN-MN	416153!
6100LPD	JN-MN	416153!
61012	VIC	6754S=
61013	VIC	417621!
610136C91	IH	473214!
61015	VIC	416288!*
61018	VIC	417171!
61019	VIC	417172
61020	VIC	415021
61022	VIC	415394
61024	VIC	456105*
61026	VIC	417490*
61027	VIC	455336*
61028	VIC	455022
6103	C-R	710274
610318C91	IH	411376!
61033	VIC	476470
610336C91	IH	417316!
610337C91	IH	416557=
61036	VIC	417181!*
61038	VIC	418028
61038	VIC	455137!
61040	VIC	418028
61040	VIC	455137!
61041	VIC	417353!
61042	VIC	415023
610465C91	IH	450593!
61047	VIC	416292*
6105	C-R	340387
61051	VIC	415085!
61051	VIC	456648
610521	GMC	456744N
61054	VIC	455024
61059	VIC	412473!
61061	VIC	417191
61061	VIC	456585
61062	VIC	417191
61062	VIC	456585
610626C91	IH	416664=
61063	VIC	417354!*
610632C91	IH	416664=
61064	VIC	455249!
61065	VIC	415025
61070	VIC	417492*
610712C92	IH	417349!
61072	VIC	417493*
61074	VIC	455026
61078	VIC	415991
61078	VIC	455146!
61079	GWI	415991
61079	GWI	455146!
61079	VIC	415991
61079	VIC	455146!
6107OSR	JN-MN	473215!*
6108	C-R	340387
61081	VIC	417196!*
610813	MICH	417298
61083	VIC	415437*
610866C92	IH	412040
610867C92	IH	411394!
610870C92	IH	417344!
6108B	JN-MN	416956*
6108LUP	JN-MN	416956
61090	VIC	415711*
61092	VIC	417497*
61094	OLIVE	415483!
61094	VIC	417498*
61095	VIC	417498
61096	VIC	55028
61099	VIC	455402=
611	CALI	415234!
61101	VIC	416332!
61101S	TROS	7607
61102	TROS	8139
61103	TROS	291295
61103	VIC	415937!
611035	WOOL	472179
61103D	IH	471192
61104S	TROS	331301N
61105	VIC	417355!*
61108	VIC	416125!
61109	VIC	416125!*
61112	VIC	417501*
61116	VIC	55030
61116M1	MASSE	JV1215=
61117	VIC	55646*=
61117M1	MASSE	200752
61120	TROS	472164
61121	VIC	415379
61121	VIC	415379!
61123	VIC	417205!*
61125	VIC	416339
61125	VIC	455031!
61127	VIC	415150!*
6112R	JN-MN	470898
61134	VIC	455178=
61136	VIC	417504*
61138	VIC	455032!
6113LA	JN-MN	470898
6113LPD	JN-MN	470898
6113LUD	JN-MN	470898
61140	VIC	455189*
6114180	GMC	417316!
61145	VIC	417210!*
61147	VIC	417211!*
6115	SPG	473463
61150	VIC	416345!
61150	VIC	455033
61151	VIC	417366!*
61152	VIC	415697!
61152	VIC	455547
61156	VIC	417967!*
61158	VIC	415034!
6116	HYST	415645!
61160	VIC	455191*
61161	TROS	42101S
61161	VIC	417506
61164	VIC	457294
61165	VIC	415187
61167	JAE	415035!
61167	JAE	415035
61167	VIC	415035
61167	VIC	415035!
61169	VIC	417356!
61169	VIC	455188
6117	SPG	410708
61171	VIC	417357
61171	VIC	455192!
61173	VIC	417357
61173	VIC	455192!
61174	VIC	416130!
61175	VIC	415036
611758	ALLCH	473460
61176	VIC	417507!
61176	VIC	417507
611760	ALLCH	416865

! Industrial Size/Type * Minor Width Difference

= The U.S. customer service number is 877-4-TIMKEN. The Canadian customer service numbers are 800-565-4927 (English) and 800-565-0438 (French-Canadian).

Mfr. No.	Name	Zero Duplication or Recommended Industrial
611761	ALLCH	415035
611763	ALLCH	415254
611764	ALLCH	473452
61177	VIC	415041
611770	SPERY	415035
61178	VIC	415041*
61179	VIC	417509*
61181	VIC	417223
61186	VIC	55193*=
61188	VIC	455037
6119	C-R	340849
61197	VIC	455134!
61199	VIC	415142*
611D	CALI	415234!
612	UNIVE	417596
6120	C-R	253747!
6120	C-R	340849
6120	O-M	343185
612000	CLARK	410059
612000	CLARK	470380!
61201	VIC	417512
61203	VIC	415043
61203S	TROS	471821!
61205	VIC	455203*
61207	VIC	455056
61210	C-R	455330!
61212	VIC	455194*
61214	VIC	417513
61216	VIC	417514
61220	C-R	455330!
61220	VIC	417516
61221	C-R	455330!
61222	VIC	415058*
61225	VIC	472157!
61225	VIC	472157
61227	VIC	415196!*
61229	VIC	416891!
6122LA	JN-MN	474265
6122LUP	JN-MN	474265
61232	VIC	416891!
612336	ACF	470954
61234	VIC	416137*
61235	VIC	417518*
61236	VIC	415058
6124	SPG	470954
61240	C-R	415074
61240S	TROS	7886S
61241	VIC	455197
61241	VIC	455197N
61243	VIC	417520
61245	VIC	416144
612462R91	IH	471341!
61247	VIC	417238
61248	C-R	415074
6125	C-R	343105!
6125	C-R	7399S
61250	C-R	415074*
61252	VIC	415196!*
61254	VIC	415047
61255	C-R	457874
61256	VIC	416149*
61257	VIC	6635S
61258	VIC	415060
61258	VIC	455060
6125SH	JN-MN	40328*
61261	C-R	457874
61263	VIC	457295
61266	VIC	417525
61268	VIC	417526*
612692R91	IH	471341!
612693R91	IH	476838!
61270	VIC	415351!
61272	VIC	415351!
61275	VIC	416888!
61277	VIC	416153!
61277R91	IH	472636!
612787	UNIVE	417563
612788	MICH	417563
61279	VIC	416892!
61281	VIC	416154!*
61282	VIC	416070
61283	VIC	415351!
61286	VIC	55539*=
61288	VIC	417533
61290	VIC	417534*
61297	VIC	415371
61299	AM HO	416158
61299	VIC	416158*
612W216-L	C-R	5401
612W416	C-R	416070
613-19-86	TRMBL	370036A
613-19-86	TRMBL	370349A
6130	C-R	343105!
6130	C-R	7399S
61301	VIC	415064
61306	VIC	415284
61308	VIC	417535
6131	CHRYS	471554!
6131	DURA	471554!
61310	VIC	417536
61312	VIC	417537
61314	VIC	55367*=
61315	VIC	415138!
61317	VIC	417538*
61319	VIC	417247!
613199	CATER	473463
61321	VIC	415066
61326	VIC	416163*
61328	VIC	456890
6133	GARLK	254287
61330	AM WH	417247!
61333	GWI	416167!
61333	VIC	416167!
61335	VIC	417267*
61337	VIC	417269!
6133SH	JN-MN	417267
613416	C-R	416070*
61342	VIC	417539!*
613424	C-R	417252
613428	C-R	417267
613428M1	C-R	417267
61344	VIC	417273
61348	C-R	417518
61349	VIC	416865!
6134LA	JN-MN	473213!
6134LPD	JN-MN	473213!
6135	C-R	351487
61350	VIC	417541*
6135090	FORD	713087
61354	VIC	417546!*
613558C91	IH	415351!
61359	VIC	415645!
61359	VIC	455104
6135B	JN-MN	450472!*
61364	VIC	415938*
613640C91	IH	416865
61369	AM HO	416107!
61369	AM HO	455073
61369	BUC-E	416107!
61369	BUC-E	455073
61369	VIC	416107!
61369	VIC	455073
61374	VIC	417556*
61379	VIC	416666*
6138	C-R	7188S
61384	VIC	416476!
61389	BUC-E	415072
61389	VIC	415072*
6138LA	JN-MN	470898
6139	C-R	7188S
613901C91	IH	416287
613901C91	IH	416288!
613938	WHITE	472636!
61394	VIC	457874*
61399	VIC	417562*
613W428	C-R	417267
614	UNIVE	455584
61402S	TROS	471193
61404	VIC	417563*
61408	VIC	416229*
6140LA	JN-MN	417316!
6141	C-R	7188S
614138	GERL	416107!
614138	GERL	455073
61414	VIC	417298*
614145	GERL	455056
61419	VIC	417596
614202	CATER	417298
614202	GERL	417298
61424	VIC	455584
61429	VIC	416239!
6143	C-R	7188S
61430	VIC	416239!
61434	VIC	416077
61439	BUC-E	415116
61439	VIC	415116*
614410R91	IH	40568S
61444	VIC	455117*
6144631	SPICE	471689!
61449	MARI	415551
61449	VIC	415551*
6144LA	JN-MN	416339
6144LA	JN-MN	455031!
6145	C-R	351487
61454	VIC	417598*
61459	VIC	455406!
6145LA	JN-MN	417181!
614631	SPICE	473473
614633	SPICE	417316!
614634-3	SPICE	471570!
61464	VIC	455121*
61466	VIC	417600*
61467	VIC	417601*
614682	CLARK	40169S
61469	VIC	417602!
614699	CATER	473475
6146LA	JN-MN	415035!
6146LA	JN-MN	415035
6146LUP	JN-MN	415035!
6146LUP	JN-MN	415035
6147	C-R	7188S
614702	GERL	415559
614729	CLARK	471760
614733	CLARK	471570!
61474	VIC	455123*
614740	CLARK	471787
61479	VIC	415124*
6148	C-R	351487
61489	BUC-E	417604
61489	VIC	417604*
61494	VIC	417567*
6149LA	JN-MN	455194*
6150	C-R	7188S
61500	VIC	415128*
6150037	FORD	331107N
61507S	TROS	7442H
615098C91	IH	416404=
61509S	TROS	342805
6151	C-R	351487
61510	VIC	415090*
61510S	TROS	7751H
61512S	TROS	473228!
61514S	TROS	8421S
61515	VIC	55218*=
615166	CLARK	471264!
6152	C-R	314267N
6152	C-R	340724!
6152	CLIN	481443!
61520	VIC	415219*
61520S	TROS	7929S
61521S	TROS	473473
6152753281	KOMAT	100296
61530	VIC	417606*
61535	VIC	55222*=
615380	CLARK	472185!
61540	VIC	55223*=
615438C91	IH	8126S
61545	VIC	55224*=
615463-2	SPICE	415088
615463-2	SPICE	415088!
615499C91	IH	7840S
61550	VIC	417020*
61559	VIC	417570*
61567	VIC	415227!*
615670C91	IH	415988=
6158	MARI	417020
615803	WHITE	471689!
615826	CATER	472179
615831C91	IH	410825
615833C91	IH	473243
61585	VIC	415482*
615860	CLARK	415995!
6158SS	JN-MN	240733
615N2	WHITE	473215!
61601	TROS	5587
61604	VIC	415076*
6161052	HERCU	340771
6161106A	HERCU	471466!
6161310	HERCU	417210!
6161310B	HERCU	417210!
61618	MC-CL	471551!
61620S	TROS	350936
61626	VIC	473425
6162LA	JN-MN	471765!
6162LUP	JN-MN	471765!
61630	MARI	455406!
616310	HERCU	417210!
6164	NATL	452222!
6164	SEAMA	412119!
61640009	TROS	417223
61641209	TROS	417516
61641609	TROS	415058
61642409	TROS	370019A
61643609	TROS	457585
61644009	TROS	370021A
61646009	TROS	417273
61650009	TROS	416865
61650010	TROS	416865
61650014	TROS	416865!
61650809	TROS	417258
61650811	TROS	417258
61651607	TROS	417262!
61651609	TROS	417262!
6165RPD	JN-MN	415697!
6165RPD	JN-MN	455547
616654	CLARK	40059S
61670	AM WH	415645!
61670	AM WH	455104

! Industrial Size/Type * Minor Width Difference

= The U.S. customer service number is 877-4-TIMKEN. The Canadian customer service numbers are 800-565-4927 (English) and 800-565-0438 (French-Canadian).

Mfr. No.	Name	Zero Duplication or Recommended Industrial
6168	C-R	471466!
616800	UNIVE	416229
6168LA	JN-MN	455292=
6169	C-R	471466!
61692R91	IH	417344!
6169LA	JN-MN	416364!
616A42410	TROS	370019A
616B43209	TROS	370021A
616D-045	BENDI	415035!
616D-045	BENDI	415035
61701	TROS	5591
617250	CHRYS	471224!
6172LA	JN-MN	471276*
6173OSR	JN-MN	417205!*
6174OSR	JN-MN	418028
6174OSR	JN-MN	455137!
61758	AM WH	415379!
61758	AM WH	415379
61761	TROS	227040
61761	TROS	70X90X10!
61781R91	IH	5408
61783R91	IH	5408
617845	CATER	415045!
6180	C-R	471466!
61801S	TROS	7399S!
61802S	TROS	7840S
6181	C-R	471466!
618113	WHITE	40468
618139	ALLCH	411253!
61820	C-R	455583N!*
61820S	TROS	471652
6183	C-R	471466!
6184	C-R	471466!
61840	C-R	455583N!*
6186	C-R	471466!
618641	ALLCH	472185!
618662	ALLCH	470954!
6186S	NATL	470354
618841	ALLCH	471466
618897	WHITE	5408
6189	C-R	471466!
618950	WHITE	5401
618951	WHITE	5403
6189SS	JN-MN	343105
6189SS	JN-MN	7399S!
619	C-R	5M466
61901S	TROS	7338N
61902S	TROS	7456N
61903S	TROS	331173
6190B	JN-MN	417349
619153	CHRYS	473313
6193	C-R	471466!*
6195	C-R	471466!
619586C91	IH	413246
619621C91	IH	416288!
619775C1	IH	JX1401=
619884	WHITE	415138!
619888	ALLCH	472179
619890	ALLCH	416891!
619900	ALLCH	471138!
619901	ALLCH	471689!
619982C91	IH	472439
62-F95C	PUL	415995!
620-C-01019	REX	471271!
620-C1018	REX	412119!
620-C1034	REX	415371
620-C1052	REX	415371
62000	C-R	2628!
62000	C-R	39885
62000	C-R	39887
62000	VIC	471264
62001	C-R	39888
62001	C-R	39889
62001	C-R	5613!
62001	VIC	240319
620022	WHITE	476470
620027	CATER	417223
62003	VIC	471267
62004	VIC	471442
62005	VIC	43069S
620058	DANA	710385
620062	SPICE	710044
62008	VIC	40973S
62009	VIC	6064*
6200C01004	AM MA	473016!
6200C01017	AM MA	472636!
6200C01033	AM MA	415371
6200LA	JN-MN	415449!
62010	VIC	43071S
6201050	REX	415379!
6201050	REX	415379
62012	GWI	470954!
62012	VIC	470954
62013	VIC	40369S
62016	VIC	40370S
62019	VIC	472354!
620199	VIC	370003A
620199	WHITE	370003A
62019AN	BUC-E	472354!
62020	VIC	254287!
62021	VIC	43072S
620216	SPICE	5131
620218	GERL	415187
62021AN	BUC-E	472560N
62023	VIC	43074S
62024	VIC	471224
62025	VIC	45637S
620257	SPICE	2300
62028	VIC	43076S
62029	VIC	43073S
620297	ADAMS	417205!
6203	C-R	471466!
62030	VIC	43077S
62031	VIC	330385!
62032	VIC	240435
62034	VIC	43078S
62035	VIC	471766
62036	VIC	40627S=
62039	VIC	40504S=
6204	C-R	471466!
62040	VIC	471526
62041	VIC	340771*
62043	VIC	40568S
62044	VIC	472311
62045	VIC	42352S
620456	ADAMS	415645!
620456	ADAMS	455104
62046	VIC	340413
62049	VIC	340787
620491	SPICE	471276
620491	SPICE	474127
620493	SPICE	471737
6204G	P-C	TCS45472
62050	VIC	46997S
62051	VIC	350364
620512	ADAMS	415991
620512	ADAMS	455146!
62053	VIC	40576S
620531	WHITE	416167!
620532X20	TROS	370027A
62054	VIC	40566S
62055	VIC	471413
620590	SPICE	710043
62060	VIC	42763
620602	ADAMS	417171!
620602	LETN	417171!
620616	GERL	456105
62062	VIC	41075S
62066	VIC	5865
62067	VIC	40085S
62068	VIC	417485
62069	VIC	471787
6206B	JN-MN	417254*
62070	VIC	43086S
62071	VIC	471785!
6207216	B-L-H	474278!
62073	VIC	40769S
62074	VIC	40468
62076	VIC	471466
62077	VIC	43089S
62078	VIC	42421S
620782	GERL	415025
620784	ALLCH	473010
6207849	ALLCH	473010
620785	ALLCH	471649!
62079	VIC	204503!
62079	VIC	473237
6208	C-R	471466!
62080	VIC	47150S
620812	UNIVE	417298
62083	VIC	6241S*
620834	GERL	473458!
620840	SPICE	483793
620843	WHITE	JV753
620843A	WHITE	370007A
620848	WHITE	370006A
620871	ALLCH	473231!
6209	C-R	471466!
62096	VIC	473459
620985	ALLCH	471649=
62099	VIC	415227!
6209SH	JN-MN	40169S*
620A50420	TROS	370003A
620BM224-L	C-R	6643S
620C01005	AM MA	473227
620C01011	AM MA	203034
620C01014	AM MA	471424!
620C01019	SEAMA	471271!
620C01021	AM MA	415082
620C01023	AM MA	416664!
620C01024	AM MA	417349
620C01029	AM MA	417496
620C01032	AM MA	415060
620C01032	AM MA	455060
620C01034	AM MA	415371
620C01035	SEAMA	415371
620C01041	AM MA	417554!
620C01048	AM MA	416892!
620C01052	AM MA	415371
620C01053	AM MA	416404!
6210	C-R	471466!
62100	VIC	416404!
62101	TROS	9015S
62101	VIC	416297
62102	VIC	6358
62102S	TROS	9015S
621033R91	IH	471831!
62106	VIC	415725!
6210713281	KOMAT	927120
62108	VIC	415938
6211	C-R	471466!
6211115	WHITE	455480!
6211116	WHITE	471766!
621156	ALLCH	412040
621187	ADAMS	415138!
621189C91	IH	473238
6212	C-R	471466!
6212	SPG	6966S
621201C91	IH	472572!
621225C91	IH	470954!
6213	C-R	471466!
62132	VIC	470774!
6213LA	JN-MN	471646!
62140	TROS	8121S
6215	C-R	471466!
62152	VIC	471707N
6215516	B-L-H	473238
62156	VIC	9613S
62158	VIC	473258!
62159	VIC	471835!
62160	VIC	470950!
62160	VIC	6241S
62171	VIC	340815
621713	ADAMS	476470
621713	LETN	476470
621713	WABCO	476470
62173	VIC	473517!
62175	VIC	450400
62176	VIC	471504
62178	VIC	472070
62182	VIC	332062
62184	VIC	473179!
62187	VIC	451078!
62188	VIC	352541
62189	VIC	472341!
6218LA	JN-MN	416345!
6218LA	JN-MN	455033
6218LUP	JN-MN	416345!
6218LUP	JN-MN	455033
62190	VIC	472082
62191	VIC	473467
62192	VIC	472018
62193	VIC	470354
62194	VIC	471341!
62196	VIC	471272!
62198	VIC	410825
621986	ADAMS	472636!
62199	VIC	455151
621993	CLARK	472179
622	ROTO	471466
62200	VIC	471442!
62201	VIC	471442!
62201S	TROS	8293S
62202	CUSH	205020=
62202	VIC	471442!
62203	VIC	471442!
62204	VIC	471526!
62205	VIC	471526!
62206	VIC	471526!
62208	VIC	471472!
62209	VIC	471472!
62210	VIC	471472!
62210000	AM BR	471695=
62211	VIC	471472!
62212	VIC	471466!
62213	VIC	471466!
62214	VIC	471466!
62215	VIC	471466!
62216	VIC	471264!
62218	VIC	471264!
62219	VIC	471264!
62220	TROS	8168=
62220	VIC	471255!
62220SK	VIC	471255!
62221	TROS	484054
62221	VIC	471255!
62222	VIC	471255!
62223	VIC	471255!

! Industrial Size/Type * Minor Width Difference

= The U.S. customer service number is 877-4-TIMKEN. The Canadian customer service numbers are 800-565-4927 (English) and 800-565-0438 (French-Canadian).

Mfr. No.	Name	Zero Duplication or Recommended Industrial
62224	VIC	471564
62225	VIC	471564
62226	VIC	471564
62228	VIC	470954!
62229	VIC	470954!
62230	VIC	470954!
622300C91	IH	455019!
622300C92	IH	455019!
622301C91	IH	473238!
622309	WOOL	416071
62231	VIC	470954!
62232	VIC	471554!
622322	MANT	471760
622325	MANT	455583N!
62233	VIC	471554!
622332	MANT	481568!
62234	VIC	471554!
62235	VIC	471554!
62236	VIC	471567!
62237	VIC	471567!
62238	VIC	471567!
622382	MANT	473464
622382	MANT	473464!
622386	MANT	416404!
622387	MANT	45525S
62239	VIC	471567!
62240	VIC	471643!
62240S	TROS	8133S
62241	VIC	471643!
622416	MANT	416229
62242	VIC	471643!
62243	VIC	471643!
62244	VIC	471267!
62245	VIC	471267!
622456	MANT	55223=
62246	VIC	471267!
62247	VIC	471267!
62248	VIC	471570!
62249	VIC	471570!
622492	MANT	416107!
622492	MANT	455073
622496	MANT	417316!
622497	MANT	417082
622498	MANT	417211!
6225	C-R	471466!
62250	VIC	471570!
622500	MANT	415437
622504	MANT	455397
622505	MANT	412040
622506	MANT	415991
622506	MANT	455146!
622507	MANT	415991
622507	MANT	455146!
622509	MANT	416229
62251	VIC	471570!
622512	MANT	415047
622513	MANT	411253!
622516	MANT	417269!
622518	MANT	415027!
622518	MANT	415027
62252	VIC	471646!
622526	MANT	415088
622526	MANT	415088!
622527	MANT	417487
62253	VIC	471646!
622532	MANT	417269!
622533	MANT	415035
622533	MANT	415035!
622534	MANT	417278
622535	MANT	412473!
622537	MANT	415645!
622537	MANT	455104
622538	MANT	416239!
622539	MANT	415076
622540	MANT	416476!
622542	MANT	416666
622543	MANT	417298
62255	VIC	471646!
622555	MANT	416892!
62256	VIC	470590
622561	MANT	417487!
622561	MANT	417487
62257	VIC	470590
622573	MANT	415001!
622578	MANT	455471
62258	VIC	470590
62259	VIC	470590
6226	SPG	471271!
62260	VIC	471224!
62261	VIC	471224!
622610C91	IH	240735
62262	VIC	471224!
622620	MANT	415991
622620	MANT	455146!
622625	MANT	416339
622625	MANT	455031!
622627	MANT	417546!
622633	MANT	417596
62264	VIC	471649!
62265	VIC	471649!
62266	VIC	471649!
62268	VIC	471689!
62269	VIC	471689!
6226LA	JN-MN	450285
62270	VIC	471689!
622703	WMG	008
622704	FMW	009
622705	WMG	010
622706	WMG	011
622708	WMG	110
622709	WMG	111
622710	WMG	112
622711	WMG	113
622712	WMG	114
622713	WMG	115
622714	WMG	116
622715	WMG	210
622716	WMG	211
622717	WMG	212
622718	WMG	213
622719	WMG	214
62272	VIC	471733
622720	WMG	215
622721	WMG	216
622722	WMG	217
622723	WMG	218
622724	WMG	219
622725	WMG	220
622726	WMG	221
622727	WMG	222
622728	WMG	325
622729	WMG	326
62273	VIC	471733
62274	VIC	471733
62275	VIC	471733
62276	VIC	471652
62276	VIC	482208!
62277	VIC	471652
62278	VIC	471652
62279	VIC	471652
6228	C-R	471466!
62280	VIC	471692!
62281	VIC	471692!
62282	VIC	471692!
62283	VIC	471692!
62284	VIC	470712!
62285	VIC	470712!
62286	VIC	470712!
62287	VIC	470712!
62288	VIC	471763
62289	VIC	471763
6229	C-R	471466
62290	VIC	471763
62291	VIC	471763
62292	VIC	471413!
62293	VIC	471413!
62294	VIC	471413!
62295	VIC	471413!
62296	VIC	471737
62297	VIC	471737
62298	VIC	471737
622984	ALLCH	417349
62299	VIC	471737
6230	C-R	471466!
62300	VIC	471766!
62301	VIC	471766!
62302	VIC	471766!
62303	VIC	471766!
62303	VIC	471766*
62303	VIC	471766*
62304	VIC	471795
62305	VIC	471795
62306	VIC	471795
62307	VIC	471795
62308	VIC	472258!
62309	VIC	472258!
62310	VIC	472258!
62311	VIC	472258!
62312	VIC	471192
62313	VIC	471192
62314	VIC	471192
62316	VIC	473214!
62317	VIC	473214
62318	VIC	473214!
62319	VIC	473214!
623197	ALLCH	471737=
62320	VIC	473215!
62321	VIC	473215!
62322	VIC	473215!
62323	VIC	473215!
62325	VIC	473227
62326	VIC	473227!
62327	VIC	473227!
62328	VIC	470625!
62329	VIC	470625!
62330	VIC	470625!
62332	VIC	470380!
62333	VIC	470380!
62334	VIC	470380!
62336	VIC	473228
62337	VIC	473228
62338	VIC	473228!
62339	VIC	473228!
62340	VIC	473230!
62341	VIC	473230!
62342	VIC	473230!
62343	VIC	473230!
62344	VIC	473231!
623442	GERL	415082
62345	VIC	473231
62346	VIC	473231!
623463-1	SPICE	472157!
623463-1	SPICE	472157
623463-2	SPICE	471271!
623463-3	SPICE	450143
62347	VIC	473231!
62348	VIC	473010!
62349	VIC	473010
6234LA	JN-MN	6936S*
6235	C-R	471466!
62350	VIC	473010!
62351	VIC	473010!
62352	VIC	473232!
62354	VIC	473232!
62355	VIC	473232!
62356	VIC	473237!
62357	VIC	473237!
62358	VIC	473237!
62359	VIC	473237!
6235LA	JN-MN	417343!*
62360	VIC	472164!
62362	VIC	472164!
62364	VIC	472185!
62365	VIC	472185!
62367	VIC	472185!
62368	VIC	472179
62369	VIC	472179
62369A	VIC	472179
62370	VIC	472179
62371	VIC	472179
62372	VIC	472439
62373	VIC	472439
62374	VIC	472439
62375	VIC	472439
62376	VIC	472572!
62377	VIC	472572!
62377A	VIC	472572!
62378	VIC	472572!
623784	ALLCH	415379!
623784	ALLCH	415379
62379	VIC	472572!
62380	VIC	473238!
62381	VIC	473238
62382	VIC	473238!
62383	VIC	473238!
62384	VIC	473239!
62385	VIC	473239
62386	VIC	473239!
62387	VIC	473239!
62388	VIC	473240!
62389	VIC	473240!
62390	VIC	413248
62391	VIC	473240!
62392	VIC	471424!
62393	VIC	471424!
62394	VIC	471424!
62395	VIC	471424!
62396	VIC	472492!
62397	VIC	472492!
623971	ALLCH	75251S
62398	VIC	472492!
62399	VIC	472492!
624	ROTO	240009
6240	C-R	240009
6240	SPG	205035
62400	VIC	472924!
62401	TROS	8610
62401	VIC	472924!
62402	VIC	472924!
62403	VIC	472924!
62404	VIC	472397!
62405	VIC	472397!
62406	VIC	472397!
62407	VIC	472397!
62408	VIC	473242
62409	VIC	473242
6240J	DIA	472636!
6240S	SPG	205035

! Industrial Size/Type * Minor Width Difference

= The U.S. customer service number is 877-4-TIMKEN. The Canadian customer service numbers are 800-565-4927 (English) and 800-565-0438 (French-Canadian).

Mfr. No.	Name	Zero Duplication or Recommended Industrial
6241	*EATON*	470950!
6241	*EATON*	6241S
6241	*SEAMA*	**471424!**
6241	*SPG*	6241S
62410	*VIC*	**473242**
62411	*VIC*	**473242**
62412	*VIC*	**473204**
62413	*VIC*	**473204**
62414	*VIC*	**473204**
62415	*VIC*	**473204**
62416	*VIC*	**470898**
62417	*VIC*	**470898**
62418	*VIC*	**470898**
62419	*VIC*	**470898**
6241A	*EATON*	**471795**
6241H	*TRUK*	**473467!**
6241R	*JN-MN*	**455583N!**
6241S	*NATL*	470950!
62420	*TROS*	**472070**
62420	*VIC*	**472015!**
62421	*VIC*	**472015!**
62422	*VIC*	**472015!**
62422A	*VIC*	**472015!**
62423	*VIC*	**472015!**
62424	*VIC*	**472016!**
62426	*VIC*	**472016!**
62427	*VIC*	**472016!**
62428	*VIC*	**473243**
62429	*VIC*	**473243**
62430	*VIC*	**473243**
62431	*VIC*	**473243**
62432	*VIC*	**471272!**
62433	*VIC*	**471272!**
62434	*VIC*	**471272!**
62435	*VIC*	**471272!**
624359	*CLARK*	**470380!**
62436	*VIC*	**471138!**
624360	*CLARK*	**471760**
624361	*CLARK*	**415449!**
624362	*CLARK*	**415995!**
62437	*VIC*	**471138!**
62438	*VIC*	**471138!**
62439	*VIC*	**471138!**
62440	*VIC*	**472636!**
62441	*VIC*	**472636!**
62442	*VIC*	**472636!**
62443	*VIC*	**472636!**
62444	*VIC*	**412920!**
62445	*VIC*	**412920!**
62446	*VIC*	**412920!**
62447	*VIC*	**412920!**
62448	*VIC*	**470565!**
62449	*VIC*	**470565!**
6245	*C-R*	**416865!**
6245	*GWI*	**416865!**
62450	*VIC*	**470565!**
62451	*VIC*	**470565!**
62452	*VIC*	**413246**
62453	*VIC*	**413246**
62454	*VIC*	**413246**
62455	*VIC*	**413246**
62456	*VIC*	**413247!**
62457	*VIC*	**413247!**
62458	*VIC*	**413247!**
62459	*VIC*	**413247!**
6245M1	*C-R*	**416865!**
6245M1	*GWI*	**416865!**
62460	*VIC*	**416271!**
62461	*VIC*	**416271!**
62462	*VIC*	**416271!**
624621	*GERL*	**413478**
62463	*VIC*	**416271!**
6246314	*SPICE*	**474276!**
62632	*SPICE*	**473229**
624632-5	*SPICE*	**473229**
624633	*SPICE*	**472397!**
624634-2	*SPICE*	**415458!**
624636	*SPICE*	**416654**
624638	*SPICE*	452742
624639	*SPICE*	6668S
62464	*VIC*	**471271!**
62465	*VIC*	**471271!**
624650	*ALLCH*	**451817**
624653	*ALLCH*	**411376!**
624655	*ALLCH*	**416345!**
624655	*ALLCH*	455033
62466	*VIC*	**471271!**
62467	*VIC*	**471271!**
62468	*VIC*	**470605!**
62469	*VIC*	**470605!**
6247	*C-R*	471291V
62470	*VIC*	**470605!**
62471	*VIC*	**470605!**
62472	*VIC*	**415449!**
62473	*VIC*	**415449!**
62474	*VIC*	**415449!**
62475	*VIC*	**415449!**
62476	*VIC*	**416273**
62477	*VIC*	**416273**
62478	*VIC*	**416273**
62479	*VIC*	**416273**
6248	*C-R*	471291V
62480	*VIC*	**413248**
62481	*VIC*	**413248**
62482	*VIC*	**413248**
62482	*VIC*	5971
624825	*MICH*	**417596**
624825	*UNIVE*	**417596**
62483	*VIC*	**413248**
62484	*VIC*	**415483**
62486	*VIC*	**415458!**
62486	*VIC*	**415483**
62488	*VIC*	**415458!**
62489	*VIC*	**415458!**
62490	*VIC*	**415458!**
62492	*VIC*	**417343!**
62493	*VIC*	**417343!**
62494	*VIC*	**417343!**
62495	*C-R*	**455480!***
62495	*VIC*	**417343!**
62496	*VIC*	**416664!**
62497	*C-R*	**455480***
62497	*VIC*	**416664!**
62498	*VIC*	**416664!**
62499	*VIC*	**416664!**
625	*ROTO*	**471801!**
6250	*C-R*	450535
6250	*C-R*	**471264!**
62500	*C-R*	**455480!**
62500	*VIC*	**415984!**
62501	*VIC*	**415984!**
62502	*VIC*	**415984!**
62503	*VIC*	**415984!**
62504	*VIC*	**417316!**
62505	*VIC*	**417316!**
62506	*VIC*	**417316!**
62507	*VIC*	**417316!**
62508	*VIC*	**415960**
625088	*ALLCH*	**471526!**
62509	*VIC*	**415960!**
62509	*VIC*	**415960***
62510	*VIC*	**415960**
62510	*VIC*	4564V
62511	*C-R*	55316=
62512	*VIC*	**415303!**
62514	*VIC*	**415303!**
62516	*VIC*	**417344!**
62517	*VIC*	**417344!**
62518	*VIC*	**417344!**
62519	*VIC*	**417344!**
62520	*VIC*	**417158!**
62521	*VIC*	**417158!**
62522	*VIC*	9864S
62522SF	*VIC*	9864S
62523	*VIC*	**417158!**
62524	*VIC*	**416921!**
62525	*VIC*	**416921!**
62526	*VIC*	**416921!**
62527	*VIC*	**416921!**
62527R91	*IH*	**473467!**
62528	*VIC*	**417349!**
62529	*VIC*	100495
62529	*VIC*	**417349**
62530	*VIC*	**417349!**
62531	*VIC*	100495
62531	*VIC*	**417349**
62532	*VIC*	**417350!**
62533	*VIC*	**417350!**
62534	*VIC*	**417350!**
62535	*C-R*	**417562**
62535	*VIC*	**417350!**
62536	*VIC*	**415995***
62536	*VIC*	**415995!**
62537	*VIC*	**415995***
62537	*VIC*	**415995!**
62538	*VIC*	**415995***
62538	*VIC*	**415995!**
62539	*VIC*	**415995***
62539	*VIC*	**415995!**
6254	*C-R*	**417223**
62540	*C-R*	**417562**
62540	*VIC*	**417351!**
62541	*C-R*	**417562**
62541	*VIC*	**417351!**
625410	*C-R*	**417238**
625410M1	*C-R*	**417238**
625412	*C-R*	415060
625412	*C-R*	455060
625412	*WHITE*	370019A
625414	*C-R*	**415351!**
625416	*C-R*	**415351!**
625416M1	*C-R*	**415351!**
625418	*C-R*	457585
62542	*VIC*	**417351!**
625420	*C-R*	415064
625420M1	*C-R*	415064
625422	*C-R*	417536
625424	*C-R*	**415066**
625424M1	*C-R*	**415066**
625426	*C-R*	456890
625426M1	*C-R*	456890
625428	*C-R*	**417269!**
625428	*GR-DV*	**417269!**
625428M1	*C-R*	**417269!**
62543	*VIC*	**417351!**
625430	*C-R*	**417273**
625430M1	*C-R*	**417273**
62544	*C-R*	455056
62546	*C-R*	417516
62548	*C-R*	**415058**
62548	*GR-DV*	**472157**
62548	*GR-DV*	**472157!**
6254K	*FAIRB*	**417223**
6254M1	*C-R*	**417223**
6255	*C-R*	**416865!**
6255	*CABOT*	**416865!**
6255	*GR-DV*	**416865!**
6255	*HU-WR*	**416865!**
6255	*MINMA*	**416865!**
625520R91	*IH*	**481163!**
625521R91	*IH*	**470954!**
625534	*WHITE*	**451583!**
62554	*C-R*	**417258**
6255508	*GMC*	7537S
62558	*C-R*	**417262!**
6255851	*GMC*	7456N
62558M1	*C-R*	**417262!**
6255CR	*F-R-H*	**416865!**
6255K	*FAIRB*	**416865!**
6255M1	*C-R*	**416865!**
6256074	*GMC*	**471193**
62563	*VIC*	**476470!**
62563	*VIC*	**476470**
625631	*CONTI*	**471763**
625634	*CATER*	**415350**
62564	*VIC*	**417181!**
62565	*VIC*	**417181!**
62566	*VIC*	**417181!**
6256603	*GMC*	7338N
62567	*VIC*	**417181!**
62568	*VIC*	**418028**
6256804	*GMC*	331173
62569	*VIC*	**418028**
6256973	*GMC*	331173
62570	*VIC*	**418028**
62571	*VIC*	**418028**
62572	*C-R*	**415854**
62572	*VIC*	**417353!**
62573	*VIC*	**417353!**
6257354	*GMC*	**472705!**
62574	*VIC*	**417353!**
6257476	*GMC*	7456N
62575	*VIC*	**417353!**
6257604	*GMC*	7537S
6257834	*GMC*	7338N
6257C	*DIA*	**472924!**
6257C	*WHITE*	**472924!**
6257LA	*JN-MN*	**417316!**
6257LPD	*JN-MN*	**417316!**
62580	*VIC*	**412473!**
62581	*VIC*	**412473!**
62582	*VIC*	**412473!**
62583	*VIC*	**412473!**
62584	*VIC*	**417191**
62585	*VIC*	**417191**
62586	*C-R*	3807
62586	*VIC*	**417191**
62587	*VIC*	**417191**
62588	*C-R*	3807
62588	*VIC*	**417354!**
62589	*VIC*	**417354!**
62590	*VIC*	**417354!**
62591	*VIC*	**417354!**
6259146	*GMC*	**413470!**
6259190	*GMC*	**472394**
62592	*VIC*	**416624!**
62593	*VIC*	**416624!**
62594	*VIC*	**416624!**
62595	*VIC*	**416624!**
62596	*VIC*	**415991**
62596	*VIC*	**415991!**
62597	*VIC*	**415991**
62597	*VIC*	455146!
62598	*VIC*	**415991**
62598	*VIC*	**415991!**
62599	*VIC*	**415991**
62599	*VIC*	**415991!**
625B5	*C-R*	**416865!**

! Industrial Size/Type * Minor Width Difference

= The U.S. customer service number is 877-4-TIMKEN. The Canadian customer service numbers are 800-565-4927 (English) and 800-565-0438 (French-Canadian).

Mfr. No.	Name	Zero Duplication or Recommended Industrial
625E5	C-R	416865!
625M420-L	C-R	415064
625W4	C-R	417223*
625W412	C-R	415060
625W412	C-R	455060
625W422	C-R	417536*
625W424	C-R	415066*
62600	VIC	417196!
62601	VIC	417196!
62602	VIC	417196!
62603	VIC	417196!
62604	VIC	415437
62605	VIC	415437
62606	VIC	415437
62607	VIC	415437
6260707	GMC	472572!
6260718	GMC	473010!
62608	VIC	416332!
62609	VIC	416332!
62610	VIC	416332!
62611	VIC	416332!
62612	VIC	415937!
62613	VIC	415937!
62614	VIC	415937!
62615	VIC	415937!
62616	VIC	417355!
62617	VIC	417355!
62618	VIC	417355!
62619	VIC	417355!
62620	VIC	416125!
62621	VIC	416125!
62622	VIC	416125!
62623	VIC	416125!
62624	VIC	416041
62625	VIC	416041
626255C91	IH	415871H=
626257C91	IH	416666
626259C91	IH	415234!
62626	VIC	416041
62627	VIC	416041
62628	VIC	415379
62629	VIC	3893V!
62629	VIC	415379!
62630	VIC	415379
62631	VIC	415379
62632	VIC	417205!
62633	VIC	417205!
62634	VIC	417205!
62635	VIC	417205!
62636	VIC	416339
62637	VIC	416339
62638	VIC	416339
62639	VIC	416339
6263LA	JN-MN	415295
62640	VIC	417211!
62641	VIC	417211!
62642	VIC	417211!
62643	VIC	417211!
62648	VIC	415697!
62649	VIC	415697!
626495C91	IH	5147=
6264R	JN-MN	417511
62650	VIC	415697!
62651	VIC	415697!
62652	VIC	417366!
62653	VIC	417366!
62654	VIC	417366!
62655	VIC	417366!
62656	VIC	415035*
62656	VIC	415035!
62657	VIC	415035
62657	VIC	415035!

Mfr. No.	Name	Zero Duplication or Recommended Industrial
62657M	VIC	415035
62657M	VIC	415035!
62658	VIC	415035*
62659	VIC	415035
62660	VIC	417356!
62661	VIC	417356!
62662	VIC	417356!
62663	VIC	417356!
62664	VIC	417357
62665	VIC	417357
62665A	VIC	456946N=
62666	VIC	417357
62667	VIC	417357
62668	AM WH	418028
62668	AM WH	455137!
62668	VIC	416130!
62669	VIC	416130!
62670	VIC	416130!
62671	VIC	416130!
62672	VIC	416556!
62672	VIC	472157
62673	VIC	416556!
62673	VIC	472157
62674	VIC	416556!
62674	VIC	472157
62675	VIC	416556!
62675	VIC	472157
62677	VIC	415196!
62677M	VIC	415196!
62680	VIC	416891!
626800	MICH	416229
62681	VIC	416891!
62682	VIC	416891!
62683	VIC	416891!
62684	VIC	416135!
62685	VIC	416135!
62686	VIC	416135!
62687	VIC	416135!
6268SH	JN-MN	254270
6268SS	JN-MN	343185
62692	VIC	416153!
6269204	GM	17760
62693	VIC	416153!
62694	VIC	416153!
62695	VIC	416153!
62696	VIC	416892!
6269688	GM	17720
62697	VIC	416892!
62698	VIC	416892!
62699	VIC	416892!
6269SS	JN-MN	50883=
626B5	C-R	416865!*
626BM5	C-R	416865!*
62700	VIC	415138!
62700	VIC	714750
62701	TROS	473454
62701	VIC	415138!
62702	VIC	415138!
62703	VIC	415138!
62704	VIC	417247!
62705	VIC	417247!
62706	VIC	417247!
62707	VIC	417247!
6270LA	JN-MN	417254
6270S	NATL	6270
62712	VIC	416865!
62713	VIC	416865!
62714	VIC	416865!
62714H	IH	473473
62715	VIC	416865!
62718	C-P	472560N!
62720	VIC	417262!

Mfr. No.	Name	Zero Duplication or Recommended Industrial
627209	CHRYS	450273
62721	VIC	417262!
62722	VIC	417262!
62723	VIC	417262!
62724	VIC	417358
62725	VIC	417358
62726	VIC	417358
62727	VIC	417358
62728	VIC	415645!
6273	WOODB	470059
6273	WOODB	470380!
627315C1	IH	JV1517=
627316C1	IH	200919=
627316C41	IH	200919=
62732	VIC	417359
62733	VIC	417359
62734	VIC	417359
62735	VIC	417359
62736	VIC	417254
62737	VIC	417254
62738	VIC	417254
62739	VIC	417254
6273946	GMC	722109
6273948	GMC	471271!
6273949	GMC	416273
6273977	GMC	5131
62740	VIC	417360
62741	VIC	417360
62742	VIC	417360
62743	VIC	417360
62744	VIC	416107!
62745	VIC	416107!
62746	VIC	416107!
62747	VIC	416107!
62748	VIC	417361
62749	VIC	417361
62750	VIC	417361
62751	VIC	417361
62752	VIC	417362!
62753	VIC	417362!
62754	VIC	417362!
62755	VIC	417362!
62756	VIC	417363
62757	VIC	417363
62758	VIC	417363
62759	VIC	417363
62760	VIC	416666
62761	VIC	416666
62761A	VIC	416666
62762	VIC	416666
62763	VIC	416666
62764	VIC	417364
62765	VIC	417364
62766	VIC	417364
62767	VIC	417364
62768	VIC	417365
62769	VIC	417365
62770	VIC	417365
62771	VIC	417365
62772	VIC	415072
62773	VIC	415072
62774	VIC	415072
62775	VIC	415072
62775TA	TRSCM	417562
62784	VIC	411376!
627875C92	IH	3126*=
627878	CHRYS	473179!
62789	AM WH	471750!
62790	AM WH	455136
62793	VIC	416339
62794BX	OSHKO	416624!
62796	VIC	416476!

Mfr. No.	Name	Zero Duplication or Recommended Industrial
627981	SPERY	1049
627D-198	BENDI	473240!
6280	C-R	471264!
62804	VIC	415498
62806	VIC	415035
62806	VIC	415035!
62808	VIC	417247!
62809	VIC	417350=
62813	VIC	417365
62815	VIC	410825
62825	VIC	471785!
62827	VIC	471795
628274	ALLCH	411452=
62831	VIC	332134
62833	VIC	415960!
628357	ALLCH	415991
628357	ALLCH	415991!
6283576	ALLCH	415991!
6283576	ALLCH	415991
62836R1	IH	473463
62837R11	IH	473463
62837R91	IH	473463
62839	VIC	471413!
62840	VIC	471652
62841	VIC	471763
62842	VIC	471689!
628485	ALLCH	415302
62851	VIC	473237!
62855	VIC	474276!
62860	VIC	415295
62863	VIC	J1825
62864	VIC	3813
62868	VIC	470605!
62872	VIC	410987!
628823	ALLCH	472636!
628837	UNIVE	455584
628838	MICH	455584
62885D	IH	417316!
62885M1	VIC	2628!
62886D	IH	415025
628894	ALLCH	415379
628940	ALLCH	476470!
628940	ALLCH	476470
628941	ALLCH	415449!
6289LA	JN-MN	415995!
62903SC	VIC	415984!
629040	ALLCH	417316!
62922	VIC	471692!
62925	VIC	417350!
62925M	VIC	417350=
6292SS	JN-MN	472016!*
62930	C-R	160X185X10
62931	VIC	416706=
629317	CONTI	455080
62933	VIC	415958
62935	C-R	160X185X10V
629355R91	IH	473214
62940	C-R	160X190X15
62941	C-R	160X190X15V
629419	CLARK	470712!
62945	C-R	160X190X15V
6294LA	JN-MN	416339
6294LA	JN-MN	455031!
6295LA	JN-MN	415036*
62960	VIC	471750!
6296LA	JN-MN	410737!
629733	ALLCH	411178=
6298216	B-L-H	471231!
6298416	B-L-H	471281!
6298LA	JN-MN	473463
62D48	CYCLO	471413!
62E365	CUSH	470625!

! Industrial Size/Type * Minor Width Difference

= The U.S. customer service number is 877-4-TIMKEN. The Canadian customer service numbers are 800-565-4927 (English) and 800-565-0438 (French-Canadian).

Mfr. No.	Name	Zero Duplication or Recommended Industrial
62E446	CUSH	471571
62E456	CUSH	471766!
62GT-1	TROS	9015S
62GT-2	TROS	9015S
62X1048	GARLK	472572!
62X1050	GARLK	472572!
62X1057	GARLK	473238
62X1069	GARLK	473240!
62X1075	GARLK	473458!
62X111	GARLK	471538!
62X1114	GARLK	472319
62X1129	GARLK	472144!
62X113	GARLK	471553!
62X1135	GARLK	472394
62X1150	GARLK	450472!
62X1162	GARLK	450474
62X1186	GARLK	471870!
62X1189	GARLK	472492!
62X1191	GARLK	472492!
62X1201	GARLK	470530!
62X1204	GARLK	472397!
62X1206	GARLK	472397!
62X1323	GARLK	470898
62X1329	GARLK	472015!
62X1332	GARLK	410308!
62X1340	GARLK	472409!
62X1402	GARLK	472018
62X144	GARLK	471567!
62X147	GARLK	471643!
62X1471	GARLK	471341!
62X1473	GARLK	471341!
62X1476	GARLK	471272!
62X148	GARLK	471643!
62X1494	GARLK	472636!
62X1504	GARLK	411376!
62X1505	GARLK	411376!
62X159	GARLK	481443!
62X1642	GARLK	470565!
62X1644	GARLK	470565!
62X1654	GARLK	413246
62X1656	GARLK	413246
62X1658	GARLK	412119!
62X1668	GARLK	416271!
62X1680	GARLK	417480!
62X175	GARLK	471539!
62X1750	GARLK	417073
62X1752	GARLK	417073
62X1807	GARLK	471271!
62X1819	GARLK	415449!
62X1821	GARLK	415449!
62X1882	GARLK	413479
62X1939	GARLK	415483!
62X1948	GARLK	417343!
62X1993	GARLK	455434
62X2004	GARLK	455151
62X2032	GARLK	480491
62X2035	GARLK	416664!
62X2038	GARLK	417484!
62X2044	GARLK	417316!
62X2045	GARLK	417316!
62X2046	GARLK	417316!
62X2047	GARLK	415960
62X2048	GARLK	415960
62X2049	GARLK	415960
62X2086	GARLK	455005
62X2088	GARLK	455005
62X2115	GARLK	415303!
62X2124	GARLK	416921!
62X213	GARLK	471267!
62X215	GARLK	471570!
62X216	GARLK	471570!
62X2168	GARLK	417349
62X2170	GARLK	417349
62X2172	GARLK	417350!
62X2174	GARLK	415995!
62X2174	GARLK	415995!
62X2177	GARLK	417351!
62X2180	GARLK	417487
62X2180	GARLK	417487!
62X2183	GARLK	417488!
62X2186	GARLK	455019!
62X219	GARLK	471646!
62X2198	GARLK	455019!
62X2225	GARLK	417621!
62X2237	GARLK	416297
62X224	GARLK	471137
62X2270	GARLK	476470
62X2273	GARLK	417181!
62X2327	GARLK	417354!
62X2348	GARLK	417493
62X2366	GARLK	415991
62X2366	GARLK	455146!
62X2367	GARLK	415991
62X2367	GARLK	455146!
62X2369	GARLK	417196!
62X2372	GARLK	415437
62X2393	GARLK	415711
62X2417	GARLK	416332!
62X2421	GARLK	415937!
62X2462	GARLK	415379
62X2462	GARLK	415379!
62X2501	GARLK	417211!
62X2504	GARLK	416345!
62X2519	GARLK	476470!
62X2519	GARLK	476470
62X2537	GARLK	415035
62X2600	GARLK	417511
62X2636	GARLK	417513
62X2663	GARLK	416891!
62X270	GARLK	451583!
62X2711	GARLK	416380!
62X2723	GARLK	416149
62X2753	GARLK	416888!
62X2759	GARLK	416892!
62X2807	GARLK	416158
62X2837	GARLK	415138!
62X287	GARLK	471224!
62X288	GARLK	471224!
62X291	GARLK	471649!
62X2915	GARLK	415725!
62X2921	GARLK	416865!
62X2922	GARLK	416865!
62X2927	GARLK	417541
62X293	GARLK	471689!
62X3059	GARLK	417262!
62X3067	GARLK	415645!
62X3067	GARLK	455104
62X3184	GARLK	416107!
62X3184	GARLK	455073
62X323	GARLK	471651
62X3277	GARLK	417362!
62X3278	GARLK	417363
62X3279	GARLK	417363
62X3280	GARLK	417363
62X3281	GARLK	416666
62X3282	GARLK	416666
62X3283	GARLK	416666
62X3355	GARLK	415683
62X3367	GARLK	415072
62X3384	GARLK	415074
62X3426	GARLK	415294!
62X351	GARLK	471652
62X3518	GARLK	416044
62X353	GARLK	471692!
62X3544	GARLK	415867
62X3601	GARLK	417601
62X3610	GARLK	417604
62X362	GARLK	471785!
62X3624	GARLK	415090
62X3660	GARLK	417605
62X3673	GARLK	417198
62X37	GARLK	50199S!
62X37	GARLK	6863S!
62X38	GARLK	50199S!
62X38	GARLK	6863S!
62X383	GARLK	472475
62X385	GARLK	473426
62X3869	GARLK	472705!
62X387	GARLK	471765!
62X388	GARLK	471765!
62X390	GARLK	471354!
62X3921	GARLK	417601
62X3938	GARLK	417604
62X3949	GARLK	455966
62X3954	GARLK	455462
62X4031	GARLK	55228=
62X4062	GARLK	415076
62X424	GARLK	471750!
62X425	GARLK	471750!
62X427	GARLK	471766!
62X430	GARLK	471787!
62X439	GARLK	450165
62X439	GARLK	471801!
62X441	GARLK	450165
62X441	GARLK	471801!
62X4503	GARLK	55301S
62X4507	GARLK	455462
62X4560	GARLK	415294!
62X484	GARLK	450129
62X484	GARLK	472826!
62X50	GARLK	471442!
62X5246	GARLK	470625!
62X535	GARLK	470774!
62X543	GARLK	471192
62X544	GARLK	473214!
62X546	GARLK	473214
62X548	GARLK	473215!
62X55	GARLK	471549!
62X550	GARLK	470950!
62X550	GARLK	6241S
62X551	GARLK	470950!
62X551	GARLK	6241S
62X552	GARLK	470950!
62X552	GARLK	6241S
62X592	GARLK	473224!
62X597	GARLK	473016!
62X624	GARLK	473439!
62X643	GARLK	470625!
62X644	GARLK	470625!
62X645	GARLK	470625!
62X646	GARLK	470059
62X646	GARLK	470380!
62X648	GARLK	470059
62X648	GARLK	470380!
62X655	GARLK	473228
62X657	GARLK	473228
62X664	GARLK	473440!
62X700	GARLK	472213
62X707	GARLK	471821!
62X717	GARLK	470682
62X760	GARLK	473231
62X762	GARLK	473231
62X769	GARLK	473010
62X77	GARLK	471532
62X772	GARLK	473232
62X774	GARLK	473232
62X80	GARLK	473405
62X80X10SC	TRSCM	62X80X10
62X80X10TC	TRSCM	62X80X10
62X80X9ASN	ISP	62X80X9
62X829	GARLK	473445
62X835	GARLK	473234
62X837	GARLK	473234
62X843	GARLK	474265
62X859	GARLK	471981
62X85X8/10TAY	TRSCM	226285
62X85X8SC	TRSCM	62X85X8!
62X85X8TC	TRSCM	62X85X8!
62X87	GARLK	471466!
62X898	GARLK	471504!
62X904	GARLK	472164!
62X906	GARLK	472164!
62X907	GARLK	472185!
62X909	GARLK	472185!
62X90X10SC	TRSCM	62X90X10
62X90X10TC	TRSCM	62X90X10
62X91	GARLK	471255!
62X913	GARLK	472179
62X928	GARLK	471984
62X9808	GARLK	471689!
63	AU-WS	417344!
63	BL-KN	471267!
63	WGEAR	417491
63-0001	MCCOR	12473
63-463-1	DANA	417484
63006	VIC	240319
63008J+65055W	TRISL	370054A
63009J+65000W	TRISL	370015A
63010J+65073W	TRISL	370013A
63013	VIC	415995!
63013J+65261W	TRISL	370036A
63013J+65261W	TRISL	370349A
63013J+65261W	TRISL	380036A
63014J+65277W	TRISL	370030A
63016	VIC	416229
63018	VIC	473210
63018J+65054W	TRISL	417506
630196C91	IH	471649=
6301LA	JN-MN	417496*
630226	WILYS	471787
63023J+65262W	TRISL	370065A
63023J+65262W	TRISL	380065A
63025	VIC	7300S
63026J+65084W	TRISL	370019A
63026J+65285W	TRISL	370019A
63028J+65287W	TRISL	370007A
63028J+65297W	TRISL	370057A
63030	VIC	473227!*
63031	VIC	473228!
63032	VIC	472164!
630327	ALLCH	471538!
63033	VIC	471141!*
630334C91	IH	413248
630335C91	IH	417344!
63034	VIC	473179!
63034J+65291W	TRISL	370012A
63035	VIC	472394
63036	VIC	470530!
63036J+65263W	TRISL	370001A
63036J+65263W	TRISL	380001A
63037	VIC	470898
63037J+65092W	TRISL	370048A
63037J+65092W	TRISL	380048A
63037J+65298W	TRISL	370037A
63037J+65298W	TRISL	370338A
63040	VIC	412119*
63041	VIC	415449!
63042	VIC	415001!

! Industrial Size/Type * Minor Width Difference

= The U.S. customer service number is 877-4-TIMKEN. The Canadian customer service numbers are 800-565-4927 (English) and 800-565-0438 (French-Canadian).

Mfr. No.	Name	Zero Duplication or Recommended Industrial
63043	VIC	**415960***
63044	VIC	**417344!***
63045	VIC	**417159***
63046	VIC	**416654***
6305	TMTR	**472560N!**
63050	VIC	**471141!***
63051	VIC	7208S
63052	VIC	**471827***
63053	VIC	**471829***
63053J+65261W	TRISL	370036A
63053J+65261W	TRISL	370349A
63053J+65261W	TRISL	380036A
63055	VIC	**471272!**
63057	VIC	**472397!***
63058	VIC	**410987*=**
63060	VIC	**473228**
63062	VIC	43095S!
630621C1	IH	**417269***
63062J+65011W	TRISL	370047A
63063J+65011W	TRISL	**415437**
63063J+65073W	TRISL	370002A
63066	VIC	**470712!**
63067	VIC	**473179**
630680	FWD	**473215!**
630680	WILYS	**473215!**
63071	VIC	**414045!**
630724	WILYS	**473444**
63074	VIC	**472015!***
63076	VIC	**410737!***
63077	VIC	**418028**
63079	VIC	5711*
63079J+65283W	TRISL	370006A
6308	C-R	**471264!**
63083J+65287W	TRISL	370007A
63084	VIC	**470354**
63085	VIC	**472636!**
63086	CLARK	**471750!**
63086	WAUKE	**471649!**
63088J+65071W	TRISL	**415058**
63089	VIC	410059
63089	VIC	**470380!**
630895C1	IH	456967N=
630895C1	IH	456967V!
63090	VIC	350156
63090	VIC	**473096**
6309007	HERCU	**450593!**
6309007A	HERCU	**450593!**
63091J+65052W	TRISL	370023A
63091J+65052W	TRISL	380023A
63093J+65000W	TRISL	370124A
63093J+65078W	TRISL	370131A
63093J+65078W	TRISL	380131A
6309745	HERCU	**471554!**
6309745A	HERCU	**471554!**
63098	VIC	343098
630999	WILYS	**473367**
630999	WILYS	**473367!**
6309SS	JN-MN	**471354!***
6310	HYST	**415001!**
63100	VIC	**473234!**
63101	TROS	8974S
63102	TROS	8975S
63102	VIC	340850
63103	VIC	**471766!**
63104	VIC	**253099**
63106	VIC	**330385**
63107	VIC	**412119!***
63109	VIC	**416282**
6310SH	JN-MN	40286
6311	C-R	**471264!**
631103C1	IH	**471267**
63111	VIC	**416288**
63112	VIC	**417316!**
63113	VIC	**472439***
63114	VIC	**410825**
63115	VIC	80313
63116	VIC	200600
6311837	H-S	50010
6311837	HERCU	50010
6312	C-R	**471264!**
63122	VIC	343185
63123	VIC	312518!
63123	VIC	342518
6313046	H-S	**471553!**
6313046	HERCU	**471553!**
631305R91	IH	**417079**
631319C91	IH	5175*=
63132	VIC	343101
631324C1	IH	JV829=
63139	VIC	**481443!**
63140	VIC	355669
63142	VIC	**472560N**
63145	VIC	**350936**
63148	VIC	351487
6315	C-R	**471264**
63150	VIC	240733
63156	VIC	343104
63157	VIC	342805
63158	VIC	340847
63159	VIC	343105!
63159	VIC	7399S
6316	C-R	**471264!**
63160	VIC	340849
63160S	TROS	8430S
63161	VIC	340387
63162	VIC	340826
63163	VIC	**470954!**
63165	VIC	240731
63166	VIC	340835
6316675	H-S	**481644**
6316675A	HERCU	**481644**
63167	VIC	**472560N***
63169	VIC	343186
63170	VIC	240356
63171	VIC	240435
631713R91	IH	**417079**
63173	VIC	342517
63174	VIC	357302
63174	VIC	**415991**
63177	VIC	**417621!**
6318	C-R	**471264**
63181	VIC	**455194**
63183	MICH	450457
63184	VIC	**471267!**
63185	VIC	312518!
63185	VIC	342518
631850	CONTI	**471766!**
6318500	HERCU	**415437**
6318500A	HERCU	**415437**
63186	VIC	**410308!**
63187	VIC	6906S*
63189	VIC	322353
63189	VIC	**474278!**
63193	VIC	43109S
63195	VIC	6370N*
63196	VIC	6636S
63198	VIC	**417355!**
63198	VIC	485497
63199	VIC	**327303!**
631993R91	IH	**417079**
631HA516	C-R	6872S
631HA516-L	C-R	5471
631W52-L	C-R	7376=
63201D	IH	416163
63201S	TROS	8477S
63202	TROS	9195S=
63202	VIC	7600S
63203	VIC	**472409!**
6320331A	HERCU	**471137**
632033R91	IH	**471831!**
63203S	TROS	**473228**
63209	VIC	**472179**
63213	VIC	343104
63215	VIC	**471529**
6321593	HERCU	**471255!**
6321606A	HERCU	350156
6321606A	HERCU	**473096**
63226	VIC	**415001!**
6323	C-R	**471264**
63231	VIC	347304
63232	VIC	**330385!**
63237	VIC	345035
6324	C-R	**471264!**
63240	TROS	**484058**
63241S	TROS	8597S
63243	VIC	**471264!**
6324394A	HERCU	**471649!**
63246	VIC	327215
63246	VIC	**415035**
63247	VIC	**470530!**
6324867A	HERCU	350909
6324867A	HERCU	**471224!**
6325	C-R	**471264!**
63250010	TROS	**417541**
63251610	TROS	417547
63252410	TROS	**455576!**
63253210	TROS	**417254**
632532X18	TROS	**417254**
63258	VIC	340724!
632589	ALLCH	J1044=
63259	VIC	**471466!**
6325LA	JN-MN	**416865!**
6325LUP	JN-MN	**416865!**
632608	ALLCH	**471413**
63260S	TROS	8429S
632611	ALLCH	416287N=
63261S	TROS	8549S
63264	VIC	**471538!**
6326594A	HERCU	**417205!**
63267	VIC	240816
6326964A	HERCU	**471646!**
6326LA	JN-MN	**411253!**
6327	SPG	493291
63270	VIC	**471267!**
6327026A	HERCU	**471442!**
63272	VIC	**471270!**
63274	VIC	**471354!**
63278	VIC	**471766!**
6327LA	JN-MN	**417196!***
6328	SPG	3210
63280	VIC	343115
63281	VIC	6370N
63282	VIC	473435
63284	VIC	**471192**
63286	VIC	**450776!***
63287	VIC	**473197**
63288	VIC	6760S
6328SS	JN-MN	**470806***
63290	VIC	**3395!**
63290	VIC	352444
63292	VIC	6966S*
63296	VIC	6759S
63298	VIC	**470625!**
63299	VIC	470059
63299	VIC	**470380!**
6329LA	JN-MN	**474253**
633	C-R	5M497
63301S	TROS	9178S
63302	VIC	9613S
63303	VIC	**470380!**
63303	VIC	472189A
63304	VIC	**471344***
6330LA	JN-MN	**471733**
6330LPD	JN-MN	**471733**
63310	VIC	204017
633103C91	IH	5276*=
63313	VIC	**473235!***
63314	VIC	**473234!***
63316	VIC	6840S
63319	VIC	**471504**
63321	VIC	6489*
63325	VIC	323119
63333	VIC	**471141!**
63337	VIC	6781*
63338	VIC	**473450!**
63339	VIC	6547*
63342	VIC	**353120**
633433R91	IH	**471831!**
63344	VIC	6815
633444R91	IH	**471831!**
633446R91	IH	290070=
633446R91	IH	**472185!**
633447R91	IH	**472311!**
63345	VIC	**471195!**
63347	VIC	**473459***
63349	VIC	**472144!**
63350	VIC	40094S
63351	VIC	**472492!**
63354	VIC	**470898!**
63356	VIC	**410308***
63358	VIC	40097S
63360	VIC	**410737!***
63361	VIC	**472636!**
63362	VIC	**411253!**
63363	VIC	5921*
633630	ALLCH	**473464!**
633630	ALLCH	**473464**
63364	VIC	**411394!**
63365	VIC	**410825**
63366	VIC	**410496!**
63366A	OSHKO	**415234!**
63367	VIC	**415449!**
6336LA	JN-MN	**472636!**
6336LUP	JN-MN	**472636!**
63372	VIC	**417343!**
63374	VIC	**417350!**
63377	VIC	**456105***
63378	VIC	**476470**
6338	C-R	**471255!**
6338	VIC	**471255!**
63380	VIC	455024
63381	VIC	**417191**
63381	VIC	456585
63382	VIC	**415991**
63382	VIC	455146!
63383	VIC	345146
63384	VIC	**415937!**
63386	VIC	**415379!**
63386	VIC	**415379**
63387	VIC	**415379**
63387	VIC	**415379!**
63388	VIC	**416339**
63388	VIC	455031!
6339	C-R	**471255!**
6339	SPG	**450776!**
63391	VIC	**416345!**
63391	VIC	455033
63392	VIC	**415035**

! Industrial Size/Type * Minor Width Difference

= The U.S. customer service number is 877-4-TIMKEN. The Canadian customer service numbers are 800-565-4927 (English) and 800-565-0438 (French-Canadian).

Mfr. No.	Name	Zero Duplication or Recommended Industrial
63392	*VIC*	**415035**!
63395	*VIC*	415064*
63396	*VIC*	**415725**!
634	*CARVR*	**471766**!
634005	*ALLCH*	**471765**!
634006	*ALLCH*	450930=
63401S	*TROS*	8460N
634037	*ALLCH*	**417344**!
6340376	*ALLCH*	**417344**!
6340S	*SPG*	**472258**
63412	*VIC*	40185
63413	*VIC*	**470565**!
63415	*VIC*	**415085**!
63415	*VIC*	456648
63419	*VIC*	6336S
63420	*VIC*	**415995**!
63420	*VIC*	**415995**
634264C1	*IH*	**473205**!
63427	*VIC*	**416624**!
63429	*VIC*	**472015**!
63431C1	*IH*	**450048**
63433	*VIC*	**473224**
63435	*VIC*	**471829**
63436	*VIC*	**473234**!
6344	*C-R*	240023*
63448	*VIC*	**472324**!
634519	*ALLCH*	**417269**!
63456	*VIC*	342613!
63457	*VIC*	343123
63459	*VIC*	**472397**!
634631	*SPICE*	**417484**
6346A	*C-R*	**410708**
63470	*VIC*	**473231**!
634703	*ALLCH*	**417344**!
63472	*VIC*	**473367**!
634723R91	*IH*	**472144**!
63476	*VIC*	**417350***=
6348	*C-R*	**471255**!
63487	*VIC*	311189*
6349	*C-R*	**471255**!
63491	*VIC*	**481644**
63499	*VIC*	**470380**!
63500	*VIC*	**472397**!
63503	*VIC*	**455079**!
63503S	*TROS*	332062
63504	*VIC*	**415088**
63506	*VIC*	**455858**
63507	*VIC*	**476842**
63508	*VIC*	7235S
63517	*VIC*	340827
63518	*VIC*	323125
63518	*VIC*	**450456**!
63519	*VIC*	**471516**!
6352	*SEAMA*	470059
6352	*SEAMA*	**470380**!
63527	*VIC*	**417597**
63536	*VIC*	**473016**!
63541	*VIC*	**472287**!
63543	*VIC*	**470487**!
63544	*VIC*	323126
63544	*VIC*	**474278**!
63546	*VIC*	**473234**!
63550	*VIC*	**470625**!
63550	*VIC*	5115
63557	*AM WH*	**415001**!
63557	*VIC*	**417316**!
635571R91	*IH*	**472185**!
6356	*C-R*	**471255**!
63560S	*TROS*	**473445**
63561S	*TROS*	**471413**!
63565	*VIC*	**470380**!
63567	*AM WH*	**416476**!
63567	*VIC*	**473197**
6357	*C-R*	**471255**!
63571	*VIC*	**470605**!
63573	*WAUKE*	**481568**!
635778	*ALLCH*	**415995**!
63580	*VIC*	**471763**
63584	*VIC*	**472636**!
63584C1	*IH*	**471795**
63588	*VIC*	470328
63588	*VIC*	**481213**!
63592	*VIC*	**415351**!
63594	*VIC*	**415697**!
636-X1510	*OLIVE*	**411253**!
636-X1512	*OLIVE*	**450400**
636-X1514	*OLIVE*	**450326**
636-X1516	*OLIVE*	**473467**!
63601	*VIC*	7412S
63601S	*TROS*	8804S=
63602S	*TROS*	**472082**
63603	*VIC*	**472705**!
6361	*FULLE*	**417191**
6361	*FULLE*	455165!
63612	*VIC*	**472144**!
636139	*WILYS*	**471787**
63615	*VIC*	**471529**
6362	*NATL*	**473235**
6362	*SPG*	**473235**
63620	*VIC*	**415995**!
63620	*VIC*	**415995**
63621	*VIC*	**472324**!
63622	*VIC*	**471764**!
63622	*VIC*	**471764***!
63624	*VIC*	**470682**
63625	*VIC*	**471138**!
63625	*VIC*	**472164**!
636288	*ALLCH*	**415023**
6362SS	*JN-MN*	**330385**!
6363	*C-R*	240023*
636415R91	*IH*	**352541**
63642	*VIC*	**473179**
636423R91	*IH*	5588=
636423R92	*IH*	5588=
63647	*VIC*	7840S
636529	*CONTI*	**471688**
636628R91	*IH*	**471529**
636635B	*BENDI*	**473214**!
636636B	*BENDI*	**471801**!
636717B	*BENDI*	**472179**
636859B	*BENDI*	**474255**
6369SS	*JN-MN*	**323138**!
6370	*C-R*	240023
63700	*C-R*	55692=
63701	*TROS*	5337
63702S	*TROS*	**415284**
637088	*WHITE*	**415302**
6371	*NATL*	**414268**
63710	*C-R*	55692=
63712	*VIC*	**471442**!
6372	*C-R*	**471255**!
63722	*C-R*	55242
637237	*WILYS*	5585$
6373	*C-R*	**471255**!
6373	*SPG*	**470774**!
63733	*C-R*	**417563**
63734	*C-R*	**417563***!
63735	*VIC*	**415035**
63737	*VIC*	456946N=
63738	*VIC*	**417357**
6374	*C-R*	**471255**!
63740C1	*IH*	**473426**
637462C1	*IH*	**410708**
637467B	*BENDI*	**473236**!
637470	*BENDI*	**471570**!
637471	*BENDI*	**476838**!
637473	*BENDI*	**471750**!
637474B	*BENDI*	**473212**!
637475	*BENDI*	**473215**!
637476	*BENDI*	470059
637476	*BENDI*	**470380**!
637477	*BENDI*	**473228**
637479	*BENDI*	50075=
637480	*BENDI*	**472185**!
637481	*BENDI*	**470334**!
637482	*BENDI*	**470088**
637483	*BENDI*	**473462**
637484	*BENDI*	**470530**!
637485	*BENDI*	**413469**!
637486	*BENDI*	**411253**!
637487	*BENDI*	**415001**!
637488	*BENDI*	**417316**!
637489	*BENDI*	**415960**!
637490	*BENDI*	**416921**!
637491	*BENDI*	**415995**!
637492	*BENDI*	**415021**
637493	*BENDI*	**415023**
637494	*BENDI*	**415027**
637494	*BENDI*	**415027**!
637495	*BENDI*	**416339**
637495	*BENDI*	455031!
637496	*BENDI*	**415045**!
637497	*BENDI*	**415284**
637498	*BENDI*	**417273**
637499	*BENDI*	**416107**!
637499	*BENDI*	455073
6375	*C-R*	**471255**!
63750	*C-R*	**417563**
637500	*BENDI*	**450039**
63751	*C-R*	**417563**
63753	*WAUKE*	**471567**!
63757	*AM WH*	**473444**
6376	*C-R*	**471255**!
6377	*C-R*	**471255**!
637790	*WILYS*	5585$
63780	*C-R*	**417563**
63785	*C-R*	**417563**
6379	*C-R*	**471255**
63793C91	*IH*	**470088**
6380	*C-R*	**471255**!
6380	*VIC*	**471255**!
6381	*C-R*	450557
6381	*C-R*	**471255**!
638137	*CONTI*	**481568**!
6381LA	*JN-MN*	**415394**
638223	*CATER*	7512S=
638223	*GERL*	7512S=
63825	*C-R*	162X200X15*
6383	*C-R*	**471255**
638336	*ALLCH*	**473473**
6384	*C-R*	**471564***
638416	*C-R*	**417532**
638422	*C-R*	417537
638430	*C-R*	417540
638510A	*HARWA*	63X85X10
638512	*C-R*	**417551**
63852	*C-R*	455290
63854	*AM HO*	**417546**!
63854	*C-R*	**417546**!
63854	*MINMA*	**417546**!
63854M1	*C-R*	**417546**!
638573F1	*GARLK*	**415001**!
638586	*WILYS*	450415
6385R	*JN-MN*	417780*
6386	*C-R*	**471564**
638607	*ALLCH*	**415458**!
63876PM	*VIC*	**415027**
6388	*SPG*	6489
6388SS	*JN-MN*	**472705**!*
638W54	*C-R*	**417546**!
639010A	*HARWA*	63X90X10
639095	*WILYS*	340413
63910	*EATON*	**415458**
639265	*WILYS*	5778
6394	*C-R*	**471653**!
63941	*EATON*	**415259**!
639422	*C-R*	417537
639433	*WILYS*	**471827**
6395	*C-R*	**471653**!
63954	*VIC*	**410825**
63961	*TROS*	472951
63961	*TROS*	**474252**
639635	*CLARK*	40316S
63968	*VIC*	456946N=
639837	*CHRYS*	**474278**!
63986	*AM WH*	**471141**!
63C1-2S	*TROS*	8597S
63CDP-2	*TROS*	**484058**
63GB-2S	*TROS*	**473228**
63GC-4S	*TROS*	8460N
63GO-8S	*TROS*	**472082**
63GP-8S	*TROS*	332062
63GT-2	*TROS*	9015S
63R-2S	*TROS*	8429S
63RA-2S	*TROS*	8549S
63S-7S	*TROS*	**473445**
63W-1S	*TROS*	8430S
63X0005	*GARLK*	**350364**
63X0101	*GARLK*	**481073**
63X0102	*GARLK*	**481073**
63X0105	*GARLK*	**481397**
63X0106	*GARLK*	**481397**
63X0335	*GARLK*	**473420**
63X0541	*GARLK*	**471192**
63X0547	*GARLK*	**473215**!
63X0643	*GARLK*	**470625**
63X1003	*GARLK*	451993=
63X1005	*GARLK*	451993=
63X1006	*GARLK*	473451!*
63X1012	*GARLK*	**473452**
63X1021	*GARLK*	473453
63X1023	*GARLK*	473453*
63X1042	*GARLK*	**472439***
63X1043	*GARLK*	**472439***
63X1044	*GARLK*	**472439**
63X1045	*GARLK*	**471868**
63X1047	*GARLK*	**471868**
63X1048	*GARLK*	**472572**!
63X1050	*GARLK*	**472572**!
63X1051	*GARLK*	**473179**!
63X1052	*GARLK*	**473179**!
63X1053	*GARLK*	**473179**!
63X1054	*GARLK*	**414045**!*
63X1057	*GARLK*	**473238**
63X1058	*GARLK*	**473238**
63X1059	*GARLK*	**473238**!
63X1060	*GARLK*	**450084**!
63X1062	*GARLK*	**450084**!
63X1063	*GARLK*	**473239**
63X1065	*GARLK*	**473239**
63X1066	*GARLK*	**473457**!*
63X1069	*GARLK*	**473240**!*
63X1071	*GARLK*	**473240**!
63X1075	*GARLK*	**473458**!*
63X1076	*GARLK*	**473458**!
63X1078	*GARLK*	**472439***
63X1081	*GARLK*	**471868***
63X1084	*GARLK*	**472572**!

! Industrial Size/Type * Minor Width Difference $ F-M Number Is Part Of A Kit
= The U.S. customer service number is 877-4-TIMKEN. The Canadian customer service numbers are 800-565-4927 (English) and 800-565-0438 (French-Canadian).

Mfr. No.	Name	Zero Duplication or Recommended Industrial
63X109	GARLK	471529
63X1090	GARLK	414045 ! *
63X110	GARLK	471529
63X1105	GARLK	473240 ! *
63X111	GARLK	471538 ! *
63X1114	GARLK	472319
63X1116	GARLK	472319
63X1117	GARLK	473459
63X1119	GARLK	473459
63X112	GARLK	471538 !
63X1120	GARLK	473241
63X1122	GARLK	473241
63X1129	GARLK	472144 !
63X113	GARLK	471553 !
63X1130	GARLK	472144 !
63X1131	GARLK	472144 ! *
63X1132	GARLK	473460
63X1134	GARLK	473460
63X1135	GARLK	472394 *
63X1137	GARLK	472394
63X1138	GARLK	473461 ! *
63X1139	GARLK	473461 ! *
63X114	GARLK	471553 !
63X1141	GARLK	471391 ! *
63X1142	GARLK	471391 ! *
63X1143	GARLK	471391 !
63X1147	GARLK	473462
63X1148	GARLK	473462
63X1149	GARLK	473462
63X115	GARLK	471579
63X1150	GARLK	450472 ! *
63X1153	GARLK	473241
63X1154	GARLK	473241 *
63X116	GARLK	471579 *
63X1162	GARLK	450474 *
63X1165	GARLK	50528 *
63X1166	GARLK	50528 *
63X1167	GARLK	50528
63X1171	GARLK	473461 ! *
63X1174	GARLK	471391 ! *
63X1180	GARLK	473462
63X1186	GARLK	471870 !
63X1187	GARLK	471870 !
63X1188	GARLK	471870 !
63X1189	GARLK	472492 !
63X119	GARLK	471642
63X1190	GARLK	472492 !
63X1191	GARLK	472492 !
63X1198	GARLK	472924 !
63X1199	GARLK	472924 !
63X1200	GARLK	472924 !
63X1201	GARLK	470530 !
63X1203	GARLK	470530 !
63X1204	GARLK	472397 !
63X1205	GARLK	472397 !
63X1206	GARLK	472397 !
63X1207	GARLK	473463 *
63X1209	GARLK	473463
63X121	GARLK	470506 !
63X1210	GARLK	473242 *
63X1212	GARLK	473242
63X1216	GARLK	473464 !
63X1216	GARLK	473464
63X1217	GARLK	473464
63X1217	GARLK	473464 !
63X1218	GARLK	473464
63X1218	GARLK	473464 !
63X1222	GARLK	472924 !
63X1225	GARLK	470530 !
63X1228	GARLK	472397 !
63X1231	GARLK	473463 *
63X124	GARLK	50026 *

Mfr. No.	Name	Zero Duplication or Recommended Industrial
63X1240	GARLK	473464 !
63X1240	GARLK	473464
63X1246	GARLK	412027 *
63X1252	GARLK	451948
63X1253	GARLK	451948
63X1254	GARLK	451948 *
63X1255	GARLK	473466
63X1258	GARLK	472012
63X1260	GARLK	472012
63X1261	GARLK	450307 *
63X1263	GARLK	450307
63X1264	GARLK	450311 *
63X1266	GARLK	450311
63X1270	GARLK	416738 !
63X1270	GARLK	450096
63X1276	GARLK	450313
63X1278	GARLK	450313
63X1279	GARLK	450532
63X1282	GARLK	451948 *
63X1285	GARLK	473466 *
63X1288	GARLK	472012 *
63X1291	GARLK	450307 *
63X1294	GARLK	450311 *
63X13	GARLK	330385 !
63X1300	GARLK	416738 !
63X1300	GARLK	450096
63X1306	GARLK	450313 *
63X1309	GARLK	450532 *
63X1312	GARLK	450343 *
63X1321	GARLK	470898
63X1322	GARLK	470898
63X1323	GARLK	470898
63X1324	GARLK	473467
63X1326	GARLK	473467
63X1327	GARLK	472015 !
63X1328	GARLK	472015 !
63X1329	GARLK	472015 !
63X1330	GARLK	410308 !
63X1331	GARLK	410308 !
63X1332	GARLK	410308 !
63X1333	GARLK	472016 *
63X1334	GARLK	472016
63X1335	GARLK	472016
63X1339	GARLK	472409 !
63X1341	GARLK	472409 !
63X1345	GARLK	473243
63X1346	GARLK	473243
63X1347	GARLK	473243
63X1348	GARLK	413469 ! *
63X1349	GARLK	413469 ! *
63X1350	GARLK	413469 ! *
63X1357	GARLK	416267 ! *
63X1359	GARLK	416267 !
63X1363	GARLK	473467
63X1365	GARLK	473467
63X1369	GARLK	410308 !
63X1372	GARLK	472016 *
63X1378	GARLK	450621 *
63X1384	GARLK	450869 *
63X1385	GARLK	450869 *
63X1396	GARLK	416267 ! *
63X1398	GARLK	416267 !
63X1399	GARLK	473244
63X14	GARLK	330385 !
63X1400	GARLK	473244
63X1401	GARLK	473244
63X1402	GARLK	472018
63X1403	GARLK	472018
63X1404	GARLK	472018 *
63X1405	GARLK	473471 *
63X1406	GARLK	473471
63X1407	GARLK	473471

Mfr. No.	Name	Zero Duplication or Recommended Industrial
63X1408	GARLK	472020 *
63X1410	GARLK	472020 *
63X1414	GARLK	470354 *
63X1415	GARLK	470354
63X1416	GARLK	470354 *
63X142	GARLK	471554 !
63X1420	GARLK	473245 ! *
63X1422	GARLK	471504 !
63X1423	GARLK	412943 *
63X1425	GARLK	412943 *
63X1426	GARLK	413472
63X1428	GARLK	413472
63X143	GARLK	471567 !
63X1432	GARLK	416268
63X1434	GARLK	416268
63X1435	GARLK	472234 *
63X1438	GARLK	472018 *
63X144	GARLK	471567 !
63X1441	GARLK	473471 *
63X1444	GARLK	472020 *
63X145	GARLK	471498 *
63X1450	GARLK	470354 *
63X1459	GARLK	50631 *
63X146	GARLK	471498
63X147	GARLK	471643 !
63X1471	GARLK	471341 !
63X1473	GARLK	471341 !
63X1474	GARLK	471272 !
63X1475	GARLK	471272 !
63X1476	GARLK	471272 !
63X1477	GARLK	473473 *
63X1479	GARLK	473473
63X1480	GARLK	471138 !
63X1481	GARLK	471138 !
63X1482	GARLK	471138 !
63X1486	GARLK	410737 !
63X149	GARLK	471684 !
63X1492	GARLK	472636 !
63X1493	GARLK	472636 !
63X1494	GARLK	472636 !
63X1495	GARLK	411253 !
63X1496	GARLK	411253 !
63X1497	GARLK	411253 !
63X1498	GARLK	412920 !
63X1499	GARLK	412920 !
63X15	GARLK	350156
63X15	GARLK	473096
63X150	GARLK	471684 !
63X1500	GARLK	412920 !
63X1501	GARLK	455136 *
63X1504	GARLK	411376 !
63X1505	GARLK	411376 !
63X1506	GARLK	411376 !
63X1507	GARLK	472299 *
63X151	GARLK	450033 *
63X1510	GARLK	471272 !
63X152	GARLK	450033
63X1522	GARLK	410737 !
63X1528	GARLK	470645 *
63X153	GARLK	470390 *
63X1531	GARLK	411253 !
63X1534	GARLK	412920 !
63X1537	GARLK	455136 *
63X1540	GARLK	411376 !
63X1546	GARLK	415234 ! *
63X1549	GARLK	415259 ! *
63X155	GARLK	473407 *
63X156	GARLK	473407
63X1561	GARLK	472150 *
63X1563	GARLK	472150
63X157	GARLK	470601
63X1573	GARLK	411394 !

Mfr. No.	Name	Zero Duplication or Recommended Industrial
63X1575	GARLK	411394 !
63X1576	GARLK	410694 ! *
63X1578	GARLK	410694 ! *
63X1579	GARLK	450133 *
63X158	GARLK	470601
63X1581	GARLK	450133 *
63X1585	GARLK	416444 *
63X1587	GARLK	416444
63X1588	GARLK	455647 =
63X159	GARLK	481443 !
63X1594	GARLK	455321 *
63X1596	GARLK	455321
63X16	GARLK	350156
63X16	GARLK	473096
63X160	GARLK	481443 ! *
63X1600	GARLK	472150 *
63X1602	GARLK	472150
63X161	GARLK	481568 !
63X1612	GARLK	411394 !
63X162	GARLK	481443 !
63X1633	GARLK	455321 *
63X1639	GARLK	473474 *
63X1641	GARLK	473474
63X1642	GARLK	470565 !
63X1644	GARLK	470565 !
63X1648	GARLK	473475 *
63X165	GARLK	481644
63X1650	GARLK	473475 *
63X1654	GARLK	413246
63X1655	GARLK	413246
63X1656	GARLK	413246
63X1657	GARLK	412119 !
63X1658	GARLK	412119 !
63X1659	GARLK	412119 !
63X166	GARLK	481644 *
63X1660	GARLK	413247 !
63X1661	GARLK	413247 !
63X1662	GARLK	413247 !
63X1663	GARLK	410987 !
63X1666	GARLK	416271 ! *
63X1668	GARLK	416271 !
63X1669	GARLK	412861
63X167	GARLK	471337
63X1671	GARLK	412861
63X1672	GARLK	410825
63X1675	GARLK	416071 *
63X1677	GARLK	416071
63X1678	GARLK	417480 !
63X1679	GARLK	417480 !
63X1680	GARLK	417480 !
63X1687	GARLK	473475 *
63X169	GARLK	474273
63X1693	GARLK	413246
63X1696	GARLK	412119 !
63X1699	GARLK	413247 !
63X17	GARLK	471103 !
63X1705	GARLK	416271 ! *
63X171	GARLK	451739 =
63X1714	GARLK	416071 *
63X172	GARLK	451739 =
63X1723	GARLK	471887
63X1725	GARLK	471887
63X1735	GARLK	412040 *
63X1737	GARLK	412040
63X1738	GARLK	411500 *
63X1740	GARLK	411500 *
63X1741	GARLK	413478 *
63X1742	GARLK	413478 *
63X1743	GARLK	413478 *
63X1744	GARLK	450104 *
63X1745	GARLK	450104 *
63X1746	GARLK	450104

! Industrial Size/Type * Minor Width Difference

= The U.S. customer service number is 877-4-TIMKEN. The Canadian customer service numbers are 800-565-4927 (English) and 800-565-0438 (French-Canadian).

Mfr. No.	Name	Zero Duplication or Recommended Industrial
63X1747	GARLK	411245!
63X1749	GARLK	411245!
63X175	GARLK	471539!
63X1750	GARLK	417073*
63X1751	GARLK	417073*
63X1752	GARLK	417073
63X176	GARLK	471539!
63X177	GARLK	471231!
63X1771	GARLK	412040*
63X1774	GARLK	50560*
63X1775	GARLK	50560
63X178	GARLK	471231!
63X1780	GARLK	450104*
63X1783	GARLK	411245!
63X179	GARLK	474253
63X18	GARLK	471103!
63X180	GARLK	474253
63X1801	GARLK	472029
63X1802	GARLK	472029*
63X1803	GARLK	472029*
63X1804	GARLK	410752
63X1806	GARLK	410752
63X1807	GARLK	471271!
63X1808	GARLK	471271!
63X1809	GARLK	471271!
63X181	GARLK	450588*
63X181	GARLK	450588*
63X1810	GARLK	410496!
63X1812	GARLK	410496!
63X1813	GARLK	470605!*
63X1815	GARLK	470605!*
63X1819	GARLK	415449!
63X1820	GARLK	415449!
63X1821	GARLK	415449!
63X1822	GARLK	415001!
63X1823	GARLK	415001!
63X1824	GARLK	415001!
63X1825	GARLK	416273
63X1826	GARLK	416273!
63X1827	GARLK	416273!
63X1828	GARLK	455079!*
63X183	GARLK	471645
63X1830	GARLK	455079!
63X1831	GARLK	415082*
63X1834	GARLK	455655!*
63X1836	GARLK	455655!*
63X1840	GARLK	471271!
63X1841	GARLK	471271!
63X185	GARLK	471686
63X1852	GARLK	415449!
63X1855	GARLK	415001!
63X1857	GARLK	415001!
63X1858	GARLK	416273!
63X1861	GARLK	455079!*
63X187	GARLK	473412*
63X1882	GARLK	413479*
63X1885	GARLK	415302*
63X1886	GARLK	415302*
63X1887	GARLK	415302
63X1888	GARLK	455311*
63X189	GARLK	471729*
63X1890	GARLK	455311
63X1891	GARLK	415988*
63X1892	GARLK	415988*
63X1893	GARLK	415988*
63X1894	GARLK	417481*
63X1896	GARLK	417481*
63X1897	GARLK	455280*
63X1899	GARLK	455280
63X1909	GARLK	411330!*
63X1912	GARLK	415302*
63X1915	GARLK	455311*
63X1918	GARLK	415988*
63X1921	GARLK	417481*
63X1924	GARLK	455280*
63X1926	GARLK	455280*
63X1927	GARLK	412871!
63X193	GARLK	472452
63X1930	GARLK	412871!
63X1932	GARLK	412871!
63X1933	GARLK	413248
63X1935	GARLK	413248
63X1936	GARLK	450412*
63X1939	GARLK	415483!
63X1941	GARLK	415483!
63X1945	GARLK	415458!
63X1946	GARLK	415458!
63X1947	GARLK	415458!
63X1948	GARLK	417343!*
63X195	GARLK	473414*
63X1950	GARLK	417343!
63X1951	GARLK	415007*
63X1952	GARLK	415007*
63X1954	GARLK	417082*
63X1955	GARLK	417082*
63X1956	GARLK	417082
63X1960	GARLK	413248
63X1966	GARLK	415483!
63X1972	GARLK	415458!
63X1975	GARLK	417343!*
63X1978	GARLK	415007*
63X1981	GARLK	417082*
63X1987	GARLK	415302
63X199	GARLK	473414*
63X1993	GARLK	455434*
63X1994	GARLK	455434*
63X2002	GARLK	455151*
63X2003	GARLK	455151*
63X2004	GARLK	455151
63X2005	GARLK	455008*
63X2006	GARLK	455008*
63X2007	GARLK	455008*
63X2014	GARLK	455434*
63X2023	GARLK	455151*
63X2025	GARLK	455151
63X2026	GARLK	455008*
63X2028	GARLK	455008*
63X203	GARLK	473415*
63X2032	GARLK	480491*
63X2034	GARLK	480491
63X2035	GARLK	416664!
63X2036	GARLK	416664!
63X2037	GARLK	416664!
63X2038	GARLK	417484!
63X2039	GARLK	417484!
63X204	GARLK	473415
63X2040	GARLK	417484!
63X2041	GARLK	415984!*
63X2043	GARLK	415984!*
63X2044	GARLK	417316!
63X2045	GARLK	417316!
63X2046	GARLK	417316!
63X2047	GARLK	415960
63X2048	GARLK	415960
63X2049	GARLK	415960
63X2050	GARLK	416706!
63X2052	GARLK	416706!
63X2059	GARLK	417484!
63X2062	GARLK	415984!*
63X2065	GARLK	417316!
63X2067	GARLK	417316!
63X2068	GARLK	415960
63X2086	GARLK	455005*
63X2088	GARLK	455005
63X2089	GARLK	417485*
63X2090	GARLK	417485*
63X2091	GARLK	417485*
63X2092	GARLK	475384*
63X2093	GARLK	475384
63X2094	GARLK	475384*
63X21	GARLK	50010*
63X2101	GARLK	455005*
63X2103	GARLK	455005
63X2104	GARLK	417485*
63X2115	GARLK	415303!*
63X2117	GARLK	415303!*
63X2118	GARLK	417344!
63X2120	GARLK	417344!
63X2121	GARLK	417158!
63X2122	GARLK	417158!
63X2123	GARLK	417158!
63X2124	GARLK	416921!
63X2125	GARLK	416921!
63X2126	GARLK	416921!
63X2127	GARLK	417134
63X2128	GARLK	417134
63X213	GARLK	471267!
63X2132	GARLK	417344!
63X2135	GARLK	416404!*
63X2138	GARLK	416921!
63X214	GARLK	450398
63X214	GARLK	471267!
63X2146	GARLK	416956*
63X2147	GARLK	416956*
63X2148	GARLK	416956
63X2149	GARLK	417159*
63X215	GARLK	471570!
63X2150	GARLK	417159*
63X2151	GARLK	417159*
63X2152	GARLK	416654!
63X2153	GARLK	416654!
63X2154	GARLK	416654!
63X2155	GARLK	417486*
63X2157	GARLK	416956*
63X216	GARLK	471570!*
63X2160	GARLK	417159*
63X2163	GARLK	416654!
63X2166	GARLK	417486*
63X2168	GARLK	417349*
63X2169	GARLK	417349*
63X217	GARLK	471633!*
63X2170	GARLK	417349*
63X2171	GARLK	417350!
63X2172	GARLK	417350!
63X2173	GARLK	417350!
63X2174	GARLK	415995!
63X2175	GARLK	415995!
63X2176	GARLK	415995!
63X218	GARLK	471633!
63X2189	GARLK	55548
63X219	GARLK	471646!
63X2190	GARLK	55548*
63X2191	GARLK	55548*
63X2196	GARLK	455820*
63X2197	GARLK	455820*
63X220	GARLK	471646!
63X221	GARLK	470590*
63X222	GARLK	470590
63X2223	GARLK	455020*
63X2224	GARLK	455020*
63X2225	GARLK	417621!
63X223	GARLK	471137*
63X224	GARLK	471137
63X225	GARLK	471730*
63X226	GARLK	471730
63X227	GARLK	481741=
63X228	GARLK	481741=
63X229	GARLK	470645*
63X237	GARLK	482371=
63X241	GARLK	450038*
63X2436	GARLK	415832*
63X2437	GARLK	415832*
63X2451	GARLK	55646*=
63X2452	GARLK	55646*=
63X251	GARLK	471571
63X2510	GARLK	417366!*
63X2513	GARLK	415958
63X2513	GARLK	415958!
63X252	GARLK	471571*
63X255	GARLK	471647*
63X256	GARLK	471647*
63X257	GARLK	472951
63X257	GARLK	474252
63X258	GARLK	472951
63X258	GARLK	474252
63X259	GARLK	450039*
63X260	GARLK	450039
63X269	GARLK	451583!
63X270	GARLK	451583!
63X2706	GARLK	417238
63X2707	GARLK	417238*
63X271	GARLK	450545*
63X273	GARLK	471648*
63X274	GARLK	471648*
63X275	GARLK	471688
63X276	GARLK	471688
63X277	GARLK	450040*
63X278	GARLK	450040
63X279	GARLK	451082*
63X285	GARLK	450339*
63X286	GARLK	450339
63X287	GARLK	471224!
63X288	GARLK	471224!
63X289	GARLK	473380*
63X290	GARLK	473380
63X291	GARLK	471649!
63X292	GARLK	471649!
63X293	GARLK	471689!
63X294	GARLK	471689!
63X295	GARLK	450593*
63X295	GARLK	450593!*
63X296	GARLK	450593!
63X297	GARLK	471733*
63X298	GARLK	471733
63X299	GARLK	471744!*
63X2994	GARLK	417258
63X2995	GARLK	417258*
63X300	GARLK	471744!
63X301	GARLK	471760*
63X302	GARLK	471760
63X303	GARLK	471619!
63X304	GARLK	471619!
63X305	GARLK	471076
63X306	GARLK	471076
63X307	GARLK	481650
63X308	GARLK	481650*
63X323	GARLK	471651
63X324	GARLK	471651*
63X325	GARLK	471705!
63X326	GARLK	471705!
63X327	GARLK	473419
63X328	GARLK	473419
63X329	GARLK	471735*
63X330	GARLK	471735
63X331	GARLK	450342
63X333	GARLK	471762!
63X334	GARLK	471762!
63X335	GARLK	473420*

! Industrial Size/Type * Minor Width Difference

= The U.S. customer service number is 877-4-TIMKEN. The Canadian customer service numbers are 800-565-4927 (English) and 800-565-0438 (French-Canadian).

Mfr. No.	Name	Zero Duplication or Recommended Industrial
63X336	GARLK	473420
63X341	GARLK	450044*
63X347	GARLK	450159*
63X35	GARLK	472810!
63X351	GARLK	471652
63X352	GARLK	471652
63X353	GARLK	471692!
63X354	GARLK	471692!
63X3547	GARLK	415482
63X355	GARLK	476838!
63X3552	GARLK	415551*
63X356	GARLK	476838!
63X357	GARLK	470712!
63X358	GARLK	470712!
63X359	GARLK	471763*
63X36	GARLK	472810!
63X360	GARLK	471763
63X361	GARLK	471785!
63X362	GARLK	471785!
63X363	GARLK	471736
63X365	GARLK	473428*
63X367	GARLK	471764!
63X369	GARLK	473427*
63X37	GARLK	50199S!
63X37	GARLK	6863S!
63X370	GARLK	473427
63X374	GARLK	450362*
63X377	GARLK	450600=
63X38	GARLK	50199S!
63X38	GARLK	6863S!
63X383	GARLK	472475*
63X384	GARLK	472475
63X385	GARLK	473426*
63X386	GARLK	473426
63X3863	GARLK	350435
63X3869	GARLK	472705!
63X387	GARLK	471765!
63X3871	GARLK	450342
63X3872	GARLK	471747!
63X3873	GARLK	471747!
63X3874	GARLK	471747!
63X3876	GARLK	473425
63X3879	GARLK	472536
63X388	GARLK	471765!
63X3880	GARLK	471344*
63X3883	GARLK	473442!*
63X3885	GARLK	470088*
63X3887	GARLK	471841
63X3889	GARLK	450965*
63X389	GARLK	471354!*
63X39	GARLK	474277
63X390	GARLK	471354!
63X3902	GARLK	455080*
63X3904	GARLK	472234*
63X394	GARLK	473205
63X3949	GARLK	455966
63X397	GARLK	474255
63X398	GARLK	474255
63X399	GARLK	474255
63X40	GARLK	474277
63X403	GARLK	450048*
63X405	GARLK	450173*
63X424	GARLK	471750!
63X425	GARLK	471750!
63X426	GARLK	471750!
63X427	GARLK	471766!
63X428	GARLK	471766!
63X43	GARLK	320457*
63X430	GARLK	471787!
63X431	GARLK	471787!
63X433	GARLK	450177*
63X436	GARLK	471795
63X437	GARLK	471795
63X438	GARLK	471795
63X439	GARLK	450165
63X439	GARLK	471801!
63X44	GARLK	320457
63X440	GARLK	450165
63X440	GARLK	471801!
63X441	GARLK	450165
63X441	GARLK	471801!
63X442	GARLK	471808!*
63X443	GARLK	471808!*
63X444	GARLK	471808!
63X445	GARLK	471818*
63X446	GARLK	471818*
63X447	GARLK	471818*
63X448	GARLK	470050*
63X4483	GARLK	415442!
63X4483	GARLK	55442
63X4484	GARLK	455396*
63X45	GARLK	470004!
63X451	GARLK	473424!*
63X454	GARLK	450124=
63X4560	GARLK	415294!
63X4579	GARLK	470088
63X4580	GARLK	415023
63X4584	GARLK	473197
63X4586	GARLK	471570!
63X4589	GARLK	450400*
63X4590	GARLK	472164!
63X4592	GARLK	470898
63X4593	GARLK	411330!*
63X46	GARLK	470004!
63X4600	GARLK	474256
63X4603	GARLK	471231!
63X4605	GARLK	471554!
63X4610	GARLK	415871*
63X4640	GARLK	415991
63X4640	GARLK	455146!
63X4645	GARLK	450143
63X4646	GARLK	412119!
63X4651	GARLK	415035!
63X4651	GARLK	415035
63X4652	GARLK	416239!*
63X4654	GARLK	417172*
63X4659	GARLK	473244
63X4662	GARLK	470506!
63X4665	GARLK	472636!
63X4667	GARLK	55548*
63X4668	GARLK	417541*
63X4669	GARLK	416892!*
63X4670	GARLK	472924!
63X4671	GARLK	471504!
63X4672	GARLK	472164!
63X4677	GARLK	472560N!
63X4681	GARLK	415124*
63X4682	GARLK	417351!
63X4686	GARLK	417344!
63X4687	GARLK	472184=
63X4688	GARLK	415645!
63X4688	GARLK	455104
63X4691	GARLK	473475*
63X4693	GARLK	472144!*
63X4695	GARLK	416229*
63X4704	GARLK	471785!
63X4710	GARLK	455026*
63X4712	GARLK	456105*
63X4717	GARLK	455019!*
63X4718	GARLK	473212!*
63X4720	GARLK	416107!
63X4720	GARLK	455073
63X4723	GARLK	417134
63X4727	GARLK	416865!*
63X4729	GARLK	457874
63X4732	GARLK	417196!*
63X4734	GARLK	415082*
63X4735	GARLK	411376!
63X4735F1	GARLK	411376!
63X4736	GARLK	55028*
63X4738	GARLK	417621!
63X4740	GARLK	414045!*
63X4745	GARLK	415991
63X4745	GARLK	455146!
63X4752	GARLK	417512*
63X4754	GARLK	471554!
63X4766	GARLK	473232
63X4766R1	GARLK	473232!
63X4768	GARLK	415482*
63X4771	GARLK	416892!*
63X4772	GARLK	416345!
63X4772	GARLK	455033
63X4774	GARLK	55078S*
63X4775	GARLK	417526*
63X4780	GARLK	416892!*
63X4781	GARLK	471549!
63X4783	GARLK	417541*
63X4784	GARLK	415072*
63X4785	GARLK	415124*
63X4787	GARLK	476470
63X4788	GARLK	415066*
63X4789	GARLK	415327*
63X4790	GARLK	416288!*
63X4792	GARLK	471354!*
63X4800	GARLK	417020*
63X4801	GARLK	415227!*
63X4802	GARLK	450545
63X4803	GARLK	55532=
63X4804	GARLK	417487
63X4805	GARLK	55228*=
63X4806	GARLK	455129*
63X4808	GARLK	417247!*
63X4809	GARLK	415294!
63X482	GARLK	473210
63X4825	GARLK	417254*
63X4828	GARLK	416865!*
63X4832	GARLK	415303!*
63X4836	GARLK	417247!*
63X4837	GARLK	415196!*
63X4838	GARLK	413469!*
63X4838F1	GARLK	413469!
63X484	GARLK	450129
63X484	GARLK	472826!
63X4842	GARLK	471472!
63X4844	GARLK	415001!
63X4847	GARLK	471539!
63X485	GARLK	450129
63X485	GARLK	472826!
63X4854	GARLK	415035
63X4855	GARLK	481537*
63X4861	GARLK	473226*
63X4862	GARLK	471870!
63X4865	GARLK	417254*
63X487	GARLK	473421*
63X4871	GARLK	470954!*
63X4872	GARLK	417597*
63X4873	GARLK	416888!
63X4874	GARLK	55392*=
63X4876	GARLK	455406!*
63X4878	GARLK	417602!*
63X4882	GARLK	417262!
63X4883	GARLK	417269!
63X4891	GARLK	471862*
63X4897	GARLK	415025*
63X4899	GARLK	455536*
63X49	GARLK	471442!
63X490	GARLK	473211!*
63X4900	GARLK	471391!*
63X4902	GARLK	417269!
63X4904	GARLK	416556!
63X4904	GARLK	472157
63X4907	GARLK	50026*
63X4908F1	GARLK	471529
63X491	GARLK	473211!
63X4912	GARLK	415150!*
63X4914	GARLK	416271!*
63X4916	GARLK	470898
63X492	GARLK	473211!*
63X4924	GARLK	417597*
63X4925	GARLK	417606*
63X4928	GARLK	416154!*
63X4929	GARLK	455462*
63X493	GARLK	473212!*
63X4934	GARLK	415066*
63X4938	GARLK	412920!
63X4938F1	GARLK	412920!
63X494	GARLK	473212!*
63X4945	GARLK	416738!
63X4945	GARLK	450096
63X495	GARLK	473212!
63X4958	GARLK	411394!
63X4959	GARLK	416268
63X496	GARLK	473213!
63X4965	GARLK	451031=
63X4966	GARLK	417247!*
63X4967	GARLK	417549!*
63X4968	GARLK	416144*
63X497	GARLK	473213!
63X4976	GARLK	472843*
63X498	GARLK	473213!
63X4982	GARLK	417547*
63X4987	GARLK	415458!
63X4988	GARLK	470774!
63X499	GARLK	450503*=
63X4991	GARLK	455480!*
63X4992	GARLK	473237!*
63X4998	GARLK	417486*
63X5	GARLK	350364
63X50	GARLK	471442!
63X5002	GARLK	415683*
63X5005	GARLK	472179
63X5007	GARLK	472287!*
63X5008	GARLK	415437!
63X5008	GARLK	415437
63X5025	GARLK	416288!*
63X5028	GARLK	455476*
63X5030	GARLK	415023
63X5031	GARLK	415072*
63X5041	GARLK	471538!*
63X5041F1	GARLK	471538!
63X5043	GARLK	415371*
63X5049	GARLK	415034!
63X505	GARLK	481834
63X5050	GARLK	350364*
63X5051	GARLK	417539!*
63X5053	GARLK	473242*
63X5059	GARLK	417351!
63X5060	GARLK	455336*
63X5061	GARLK	415483!
63X5063	GARLK	55028*
63X5066	GARLK	415045!*
63X507	GARLK	481834
63X5078	GARLK	472397!
63X5079	GARLK	416339
63X5079	GARLK	455031!
63X5082	GARLK	450124=
63X51	GARLK	471526!
63X511	GARLK	473435*

! Industrial Size/Type * Minor Width Difference

= The U.S. customer service number is 877-4-TIMKEN. The Canadian customer service numbers are 800-565-4927 (English) and 800-565-0438 (French-Canadian).

Mfr. No.	Name	Zero Duplication or Recommended Industrial
63X514	GARLK	473436*
63X517	GARLK	50168*
63X520	GARLK	450054*
63X5208F1	GARLK	417211!
63X5256F1	GARLK	472179
63X5268F1	GARLK	473440!
63X5283F1	GARLK	472492!
63X5295	GARLK	471744!
63X53	GARLK	471472!
63X535	GARLK	470774!
63X536	GARLK	470774!
63X537	GARLK	470774!
63X538	GARLK	472287!*
63X5387F1	GARLK	415449!
63X5387R1	GARLK	415449!
63X539	GARLK	472287!*
63X5393	GARLK	473367!
63X5393	GARLK	473367
63X5394F1	GARLK	471785!
63X5398	GARLK	412871!
63X54	GARLK	471472!
63X541	GARLK	471192
63X542	GARLK	471192
63X543	GARLK	471192
63X544	GARLK	473214
63X545	GARLK	473214
63X546	GARLK	473214
63X547	GARLK	473215!*
63X548	GARLK	473215!*
63X549	GARLK	473215!
63X5496	GARLK	473439!
63X55	GARLK	471549!
63X550	GARLK	470950!
63X550	GARLK	6241S
63X5501	GARLK	450523
63X551	GARLK	470950!
63X551	GARLK	6241S
63X552	GARLK	470950!
63X552	GARLK	6241S
63X556	GARLK	471835!
63X5560	GARLK	411253!
63X557	GARLK	471835!
63X5581	GARLK	415458!
63X559	GARLK	472843*
63X56	GARLK	471549!
63X5656	GARLK	473426
63X5657F1	GARLK	471466!
63X566	GARLK	50126
63X5688	GARLK	470898=
63X5704	GARLK	471737
63X5713	GARLK	473227
63X574	GARLK	50254*=
63X5886	GARLK	455008*
63X5887	GARLK	473446*
63X5892	GARLK	416888!
63X5893	GARLK	472810!
63X5897	GARLK	455080*
63X5900	GARLK	473466*
63X5906	GARLK	417020*
63X5907	GARLK	416404!*
63X5912	GARLK	417548*
63X5913	GARLK	472018*
63X5914	GARLK	473010
63X592	GARLK	473224!*
63X5920	GARLK	417567*
63X5922	GARLK	417349*
63X5925	GARLK	417486*
63X5929	GARLK	415551*
63X593	GARLK	473224!
63X5930	GARLK	417211!*
63X5933	GARLK	55301S*
63X5937	GARLK	482310
63X5938	GARLK	415371*
63X594	GARLK	473224!*
63X5945	GARLK	417278*
63X5947	GARLK	411253!
63X5948	GARLK	415984!*
63X595	GARLK	473016!*
63X5953	GARLK	417357
63X5953	GARLK	455192!
63X5957	GARLK	471413!*
63X5959	GARLK	415090*
63X596	GARLK	473016!*
63X5960	GARLK	417606*
63X5966	GARLK	472179
63X5968	GARLK	473474
63X5969	GARLK	455509
63X597	GARLK	473016!
63X5978	GARLK	473380*
63X5980	GARLK	412119!
63X5981	GARLK	55078S*
63X5983	GARLK	415036*
63X599	GARLK	473225!*
63X6	GARLK	350364*
63X60	GARLK	471530
63X600	GARLK	473225!
63X601	GARLK	474264
63X602	GARLK	474264
63X6028F1	GARLK	472185!
63X603	GARLK	474264
63X6062	GARLK	472810!
63X607	GARLK	473226*
63X608	GARLK	473226*
63X609	GARLK	473226
63X6099	GARLK	481397*
63X61	GARLK	481534
63X610	GARLK	473437*
63X612	GARLK	473437
63X6127	GARLK	471231!
63X613	GARLK	471862
63X6141F1	GARLK	473244!
63X615	GARLK	471862
63X619	GARLK	473438*
63X6192	GARLK	470806*
63X621	GARLK	473438
63X622	GARLK	473439!*
63X6224	GARLK	480630!
63X6230	GARLK	473231
63X6231	GARLK	473231
63X624	GARLK	473439!*
63X6245	GARLK	450400*
63X6252	GARLK	472164!
63X6266	GARLK	417474*
63X6271	GARLK	470625!*
63X6272	GARLK	472492!
63X6289	GARLK	471498*
63X6300	GARLK	476514
63X6328	GARLK	417621!
63X6333	GARLK	455330!*
63X6335	GARLK	455583N!*
63X6340	GARLK	417600*
63X6353	GARLK	473405*
63X6356	GARLK	476470*
63X6358	GARLK	415991
63X6358	GARLK	455146!
63X6359	GARLK	416332!
63X6360	GARLK	415035
63X6360	GARLK	415035!
63X6361	GARLK	415196!*
63X6363	GARLK	416888!
63X6365	GARLK	415725!*
63X6366	GARLK	417549!*
63X6369	GARLK	417515*
63X6370	GARLK	416229*
63X6374	GARLK	416364!*
63X6375	GARLK	416239!*
63X6378	GARLK	415867*
63X6385	GARLK	417603!
63X6387	GARLK	55301S*
63X6389	GARLK	55222*=
63X6390	GARLK	55239*=
63X6391	GARLK	417605*
63X6395	GARLK	415482*
63X6411	GARLK	471413*
63X6413	GARLK	417247!*
63X6414	GARLK	473460*
63X6415	GARLK	471554!
63X6418	GARLK	415295*
63X6422	GARLK	417598*
63X643	GARLK	470625!
63X6430	GARLK	471785!
63X6431	GARLK	455022*
63X6433	GARLK	416364!*
63X6434	GARLK	417357
63X6434	GARLK	455192!
63X6437	GARLK	416239!*
63X6438	GARLK	472397!
63X6438R1	GARLK	472397!
63X6439	GARLK	417350!
63X644	GARLK	470625!
63X6440	GARLK	471272!
63X6444	GARLK	416654!
63X6446	GARLK	412473!
63X645	GARLK	470625!
63X6450	GARLK	471619!
63X6451	GARLK	417488!*
63X6456	GARLK	415449!
63X6457	GARLK	450129
63X6457	GARLK	472826!
63X6459F1	GARLK	470565!
63X646	GARLK	470059
63X646	GARLK	470380!
63X6461	GARLK	456105*
63X6462	GARLK	473225!*
63X6465	GARLK	415449!
63X6465R1	GARLK	415449!
63X6466	GARLK	471763*
63X6467	GARLK	417316!
63X6468	GARLK	416071*
63X6469	GARLK	472394*
63X6469R1	GARLK	472394
63X647	GARLK	470059
63X647	GARLK	470380!
63X6470	GARLK	471689!
63X6470F1	GARLK	471689!*
63X6471	GARLK	417316!
63X6474	GARLK	470682*
63X6475	GARLK	471835!
63X6478	GARLK	471272!
63X6479	GARLK	471192
63X6479R1	GARLK	471192
63X648	GARLK	470059
63X648	GARLK	470380!
63X6484	GARLK	416666*
63X6487	GARLK	471887*
63X6489	GARLK	476470
63X649	GARLK	471820*
63X6497	GARLK	417487
63X6499	GARLK	417487
63X650	GARLK	471820*
63X6500	GARLK	471267!*
63X6502	GARLK	416288!*
63X6506	GARLK	471271!
63X6506F1	GARLK	471271!
63X6510	GARLK	417600*
63X6511	GARLK	415088!
63X6511	GARLK	415088
63X6513	GARLK	416167!
63X6515	GARLK	455434*
63X6516	GARLK	473231
63X6517	GARLK	471808!*
63X6521	GARLK	455462*
63X6522	GARLK	471984*
63X6522R1	GARLK	471984
63X6523	GARLK	471267!*
63X6523F1	GARLK	471267!
63X6524F1	GARLK	471649!
63X6528	GARLK	418028
63X6528	GARLK	455137!
63X6529	GARLK	473224!*
63X6530	GARLK	415072*
63X6534	GARLK	415991
63X6534	GARLK	455146!
63X6541	GARLK	411245!
63X6545	GARLK	415711*
63X6546	GARLK	472439*
63X6547	GARLK	473237!*
63X6548	GARLK	473243*
63X6549	GARLK	473405*
63X655	GARLK	473228
63X6550	GARLK	417605*
63X6551	GARLK	473228
63X6551R1	GARLK	473228!
63X6554	GARLK	473236!*
63X6556	GARLK	417357
63X6556	GARLK	455192!
63X656	GARLK	473228
63X6560	GARLK	412040*
63X6563	GARLK	415045!*
63X6564	GARLK	415551*
63X6565	GARLK	417357
63X6565	GARLK	455192!
63X6568	GARLK	415035
63X6568	GARLK	415035!
63X657	GARLK	473228
63X6573	GARLK	415090*
63X6576	GARLK	470774!
63X6578	GARLK	415449!
63X658	GARLK	451857*
63X6580	GARLK	450593!
63X6581	GARLK	417603!*
63X6584	GARLK	476470
63X6585	GARLK	455655!*
63X6586	GARLK	415090*
63X6588	GARLK	416654!
63X6588R1	GARLK	416654!
63X659	GARLK	451857*
63X6590	GARLK	416332!
63X6592	GARLK	473450
63X6593	GARLK	472015!
63X6599	GARLK	416921!
63X660	GARLK	451857
63X6600	GARLK	416345!
63X6600	GARLK	455033
63X6602	GARLK	457874*
63X6603	GARLK	415725!*
63X6604	GARLK	472015!
63X6605	GARLK	473243*
63X6608	GARLK	471870!
63X661	GARLK	470487!
63X6610	GARLK	473228
63X6616	GARLK	455476*
63X6630	GARLK	55367*=
63X6632	GARLK	455151
63X6634	GARLK	415116*
63X6635	GARLK	417542*
63X6637	GARLK	471466!
63X6638	GARLK	473240!*

! Industrial Size/Type * Minor Width Difference

= The U.S. customer service number is 877-4-TIMKEN. The Canadian customer service numbers are 800-565-4927 (English) and 800-565-0438 (French-Canadian).

Mfr. No.	Name	Zero Duplication or Recommended Industrial
63X6639	GARLK	473197
63X664	GARLK	473440 ! *
63X6640	GARLK	415725 ! *
63X6644	GARLK	457874
63X6645	GARLK	415991
63X6645	GARLK	455146 !
63X665	GARLK	473440 ! *
63X6651	GARLK	417343 ! *
63X6652	GARLK	417496 *
63X6654	GARLK	472138
63X6658	GARLK	471276 *
63X666	GARLK	473440 !
63X6664	GARLK	415379
63X6664	GARLK	415379 !
63X6665	GARLK	417541 *
63X6667	GARLK	470059
63X6667	GARLK	470380 !
63X6667R1	GARLK	470380 !
63X6668	GARLK	413478 *
63X6670	GARLK	415294 !
63X6674	GARLK	471795
63X6675	GARLK	450165
63X6675	GARLK	471801 !
63X6675R1	GARLK	471801 !
63X6678	GARLK	417082 *
63X6679	GARLK	417191
63X6679	GARLK	456585
63X668	GARLK	474281 !
63X6680	GARLK	416921 !
63X6680F1	GARLK	416921 !
63X6682	GARLK	472636 !
63X6687	GARLK	415077 *
63X669	GARLK	474281 !
63X6692	GARLK	417355 ! *
63X67	GARLK	471281 !
63X670	GARLK	470625 !
63X6700	GARLK	415302 *
63X6700F1	GARLK	415302
63X6701	GARLK	473214
63X6705	GARLK	471821 !
63X6706	GARLK	473464 !
63X6706	GARLK	473464
63X6707	GARLK	417554 ! *
63X6708	GARLK	476470
63X6711	GARLK	415725 ! *
63X6713	GARLK	417601 *
63X6714	GARLK	415988 *
63X6716	GARLK	416664 !
63X6722	GARLK	417601 *
63X6723	GARLK	417488 ! *
63X6730	GARLK	417344 !
63X6730R1	GARLK	417344 !
63X6732	GARLK	471760 *
63X6733	GARLK	330385 !
63X6734	GARLK	416154 ! *
63X6739	GARLK	417621 !
63X6741	GARLK	417254 *
63X6741F1	GARLK	417254
63X6744F1	GARLK	471981
63X6745	GARLK	471766 !
63X6745R1	GARLK	471766 !
63X6746	GARLK	415683 *
63X6749	GARLK	471255 !
63X6750	GARLK	415645 !
63X6750	GARLK	455104
63X6753	GARLK	474265
63X6755F1	GARLK	471224 !
63X6757	GARLK	411376 !
63X6760	GARLK	417603 ! *
63X6762	GARLK	417134 *
63X6764	GARLK	455015 *
63X6765	GARLK	417278 *
63X6767	GARLK	415035
63X6768	GARLK	417020
63X6770	GARLK	417604
63X6773	GARLK	415551 *
63X6774	GARLK	473214
63X6774R1	GARLK	473214 !
63X6794	GARLK	473367 !
63X6794	GARLK	473367
63X6795	GARLK	471341 !
63X6796	GARLK	417362 ! *
63X6797	GARLK	455330 ! *
63X6798	GARLK	415559 *
63X6799	GARLK	415035
63X68	GARLK	471281 !
63X6800	GARLK	417082 *
63X6802	GARLK	455480 ! *
63X6806	GARLK	416339
63X6806	GARLK	455031 !
63X6832	GARLK	472179
63X6832R1	GARLK	472179
63X6833	GARLK	417606 *
63X6835	GARLK	417509 *
63X6838	GARLK	9568 *
63X6839	GARLK	476470 *
63X6840	GARLK	417506 *
63X6842	GARLK	417020 *
63X6844	GARLK	455397 *
63X6847	GARLK	417526 *
63X6853	GARLK	472394 *
63X6856	GARLK	471255 !
63X6857	GARLK	471692 !
63X6858	GARLK	55141 *
63X6860	GARLK	473010
63X6860R1	GARLK	473010 !
63X6860T2	GARLK	473010 !
63X6864	GARLK	417073 *
63X6865	GARLK	417481 *
63X6866	GARLK	412871 !
63X6868	GARLK	417351 !
63X6870	GARLK	455134 ! *
63X6871	GARLK	417515 *
63X6872	GARLK	417362 ! *
63X6888	GARLK	417584 *
63X6892	GARLK	416239 ! *
63X6893	GARLK	416865 ! *
63X6895	GARLK	455406 ! *
63X6896	GARLK	481073 *
63X6898	GARLK	470565 ! *
63X6898R1	GARLK	470565 !
63X6899	GARLK	473229
63X69	GARLK	471535 ! *
63X6900	GARLK	417316 !
63X6901	GARLK	416332 !
63X6904	GARLK	472397 !
63X6904F1	GARLK	472397 !
63X6907	GARLK	415027 *
63X6914	GARLK	416476 !
63X6917	GARLK	417525 *
63X6920	GARLK	415294 !
63X6921	GARLK	455462 *
63X6923	GARLK	415711 *
63X6924	GARLK	416666 *
63X6927	GARLK	471554 !
63X6927F1	GARLK	471554 !
63X6931	GARLK	55441 * =
63X6934	GARLK	473235 ! *
63X6937	GARLK	470625 !
63X6937R1	GARLK	470625 !
63X6938	GARLK	417269 !
63X6939	GARLK	417541 *
63X6946	GARLK	417539 ! *
63X6947	GARLK	416364 ! *
63X6949	GARLK	415138 ! *
63X6950	GARLK	450869 *
63X6952	GARLK	417362 ! *
63X6955	GARLK	471141 !
63X6957	GARLK	470354 *
63X6959	GARLK	455476 *
63X6961	GARLK	474264
63X6966	GARLK	455655 ! *
63X6968	GARLK	415021 *
63X6971	GARLK	471558 *
63X6975	GARLK	9568 *
63X6978	GARLK	415196 ! *
63X6981	GARLK	455194 *
63X6982	GARLK	416345 !
63X6982	GARLK	455033
63X6984	GARLK	471564 *
63X6990	GARLK	415035
63X6991	GARLK	416125 ! *
63X6992	GARLK	476838 !
63X6993	GARLK	471765 !
63X6993F1	GARLK	471765 !
63X6995	GARLK	471138 ! *
63X70	GARLK	471535 !
63X700	GARLK	472213
63X7007	GARLK	472810 !
63X701	GARLK	472213
63X702	GARLK	472213
63X703	GARLK	472299 *
63X7039	GARLK	471539 !
63X704	GARLK	472299 *
63X706	GARLK	471821 !
63X7060	GARLK	474256
63X7069	GARLK	470774 !
63X707	GARLK	471821 !
63X7072	GARLK	474264
63X708	GARLK	471821 !
63X7081	GARLK	473237 ! *
63X7090	GARLK	471271 !
63X7091	GARLK	415082 *
63X7099	GARLK	472924 !
63X7099F1	GARLK	472924 ! *
63X71	GARLK	471551 !
63X7101	GARLK	417604
63X7104	GARLK	415458 !
63X7110	GARLK	416888 !
63X7114	GARLK	415551 *
63X7115	GARLK	415991
63X7115	GARLK	455146 !
63X712	GARLK	473229
63X7120	GARLK	417366 ! *
63X7121	GARLK	473437 *
63X7125	GARLK	473231
63X7126	GARLK	470596 *
63X7128	GARLK	416666 *
63X713	GARLK	473229
63X7130	GARLK	471316
63X7134	GARLK	416154 ! *
63X7137	GARLK	470059
63X7137	GARLK	470380 !
63X714	GARLK	473229
63X7140	GARLK	472029 *
63X7141	GARLK	416556 !
63X7141	GARLK	472157
63X7145	GARLK	472012 *
63X7145F1	GARLK	472012
63X7146	GARLK	350435 *
63X715	GARLK	470682 *
63X7152	GARLK	473367 !
63X7152	GARLK	473367
63X7152F1	GARLK	473367
63X7153	GARLK	417350 !
63X7154	GARLK	415036 *
63X7155	GARLK	415072 *
63X7159	GARLK	455005 *
63X7160	GARLK	472016 *
63X7162	GARLK	415351 ! *
63X7164	GARLK	473455 !
63X7165	GARLK	416891 ! *
63X717	GARLK	470682
63X7174	GARLK	472018 *
63X7176	GARLK	471192
63X7177	GARLK	416706 !
63X7178	GARLK	55199 * =
63X718	GARLK	471316
63X7186	GARLK	471760 *
63X7187	GARLK	415483 !
63X7192	GARLK	415379
63X7192	GARLK	415379 !
63X7194	GARLK	412473 !
63X7195	GARLK	480630 !
63X7196	GARLK	415960
63X7197	GARLK	415995 !
63X7197T2	GARLK	415995 !
63X7197T2	GARLK	415995 !
63X7198	GARLK	482089 =
63X7199	GARLK	417487
63X72	GARLK	471551 !
63X7205	GARLK	416153 !
63X7206	GARLK	415711 *
63X721	GARLK	473441 *
63X7210	GARLK	455151 *
63X7215R1	GARLK	471689 !
63X7220	GARLK	455191 *
63X7221	GARLK	416313 *
63X7223	GARLK	472319 *
63X7224	GARLK	415001 !
63X7226	GARLK	474264
63X7229	GARLK	455189 *
63X723	GARLK	473441
63X7230	GARLK	415437
63X7230	GARLK	415437 !
63X7231	GARLK	417354 ! *
63X7233	GARLK	415551 *
63X7238	GARLK	450104 *
63X724	GARLK	450273
63X7241	GARLK	455406 ! *
63X7245	GARLK	415371 *
63X7247	GARLK	417562 *
63X7248	GARLK	473459
63X7249	GARLK	415960
63X7253	GARLK	415027 !
63X7253	GARLK	415027
63X7254	GARLK	473234
63X7254F1	GARLK	473234 !
63X7255	GARLK	417351 !
63X7258	GARLK	416892 ! *
63X7259	GARLK	450133 *
63X7262	GARLK	474274
63X7264	GARLK	473446 *
63X7265	GARLK	417362 ! *
63X7269	GARLK	415437
63X7269	GARLK	415437 !
63X7270	GARLK	417181 ! *
63X7272	GARLK	472492 !
63X7276	GARLK	416077 *
63X7277	GARLK	417474
63X7280	GARLK	471821 !
63X7282	GARLK	416339
63X7282	GARLK	455031 !
63X7284	GARLK	417539 ! *
63X7285	GARLK	411245 !
63X7289	GARLK	417191
63X7289	GARLK	456585
63X7291	GARLK	416891 ! *

! Industrial Size/Type * Minor Width Difference

= The U.S. customer service number is 877-4-TIMKEN. The Canadian customer service numbers are 800-565-4927 (English) and 800-565-0438 (French-Canadian).

Mfr. No.	Name	Zero Duplication or Recommended Industrial
63X7292	GARLK	417316!
63X7299	GARLK	471529*
63X7307	GARLK	472164!
63X7313	GARLK	418028
63X7313	GARLK	455137!
63X7314	GARLK	55199*=
63X7317	GARLK	417562*
63X7318	GARLK	455406!*
63X7320	GARLK	471424!*
63X7324	GARLK	415027*
63X7327	GARLK	471887*
63X7328	GARLK	415995!
63X7328F1	GARLK	415995!
63X733	GARLK	450065*
63X7332	GARLK	415027*
63X7334	GARLK	455144*
63X734	GARLK	450065
63X7341F1	GARLK	472475
63X7342	GARLK	415645!
63X7342	GARLK	455104
63X7346	GARLK	451948*
63X7347	GARLK	415027
63X7347	GARLK	415027!
63X7348	GARLK	417535*
63X7349	GARLK	475384*
63X7350	GARLK	415991
63X7350	GARLK	455146!
63X7353	GARLK	417601*
63X7357	GARLK	412473!
63X7358	GARLK	471646!
63X7364	GARLK	455019!*
63X7366	GARLK	417550*
63X7368	GARLK	455480!*
63X7370F1	GARLK	472164!
63X7371	GARLK	415551*
63X7372	GARLK	471808!*
63X7372F1	GARLK	471808!
63X7374	GARLK	476470
63X7375	GARLK	417596*
63X7382	GARLK	411253!
63X7386	GARLK	472258!*
63X7389	GARLK	415379
63X7389	GARLK	415379!
63X739	GARLK	482253*
63X7390	GARLK	471766!
63X7390F1	GARLK	471766!
63X7391	GARLK	474255
63X7402	GARLK	415088
63X7402	GARLK	415088!
63X7409	GARLK	416107!
63X7409	GARLK	455073
63X7418	GARLK	415683*
63X7419	GARLK	476470
63X742	GARLK	451469*
63X7420	GARLK	472029*
63X7423	GARLK	6936S
63X7433	GARLK	415072*
63X7435	GARLK	472020*
63X7436	GARLK	415327*
63X7439	GARLK	55199*=
63X744	GARLK	451469
63X7440	GARLK	415379
63X7440	GARLK	415379!
63X7447	GARLK	470059
63X7447	GARLK	470380!
63X7448	GARLK	415036*
63X751	GARLK	450274
63X7510	GARLK	472311!
63X7516	GARLK	474278!
63X7518	GARLK	471766!
63X7523	GARLK	471862*
63X7542	GARLK	417349*
63X7542F1	GARLK	417349!
63X7544	GARLK	415437
63X7544	GARLK	415437!
63X7549	GARLK	413246
63X7551	GARLK	415088!
63X7551	GARLK	415088
63X7554	GARLK	415683*
63X7555	GARLK	471984*
63X7555F1	GARLK	471984
63X7559	GARLK	417356!
63X7559	GARLK	455188
63X7560	GARLK	416154!*
63X7561	GARLK	417602!*
63X7562	GARLK	415219*
63X7563	GARLK	472492!
63X7564	GARLK	471271!
63X7566	GARLK	416865!*
63X7567F1	GARLK	471192
63X7568	GARLK	470625!
63X7568F1	GARLK	470625!*
63X7572	GARLK	417316!
63X7574	GARLK	415303!*
63X7578	GARLK	416153!
63X7590	GARLK	472157!
63X7590	GARLK	472157
63X7594	GARLK	416271!*
63X760	GARLK	473231
63X7603	GARLK	416476!
63X761	GARLK	473231
63X7610	GARLK	417549!*
63X7611	GARLK	417198*
63X7612	GARLK	415072*
63X7615	GARLK	415027!
63X7615	GARLK	415027
63X7616	GARLK	416332!
63X762	GARLK	473231
63X7626	GARLK	417549!*
63X7629	GARLK	417562*
63X763	GARLK	473367!
63X763	GARLK	473367
63X7633	GARLK	471887*
63X7633F1	GARLK	471887
63X764	GARLK	473367!
63X764	GARLK	473367
63X7642	GARLK	416294!*
63X7646	GARLK	473454
63X7649	GARLK	472018*
63X765	GARLK	473367
63X765	GARLK	473367!
63X7652	GARLK	417541*
63X7653	GARLK	415076*
63X7659	GARLK	415034!
63X7661	GARLK	471192
63X7668	GARLK	417316!
63X7669	GARLK	417298*
63X7670	GARLK	476470
63X7671	GARLK	415259!*
63X7675	GARLK	471787!
63X7677	GARLK	472319*
63X7684	GARLK	473234
63X7685	GARLK	415938*
63X7686	GARLK	415041*
63X7687	GARLK	481792
63X7689	GARLK	416158*
63X769	GARLK	473010
63X7690	GARLK	415187*
63X7695	GARLK	474281!
63X77	GARLK	471532*
63X7700	GARLK	413246
63X771	GARLK	473010
63X7717	GARLK	417171!*
63X772	GARLK	473232
63X7722	GARLK	472157
63X7722	GARLK	472157!
63X7723	GARLK	472636!
63X774	GARLK	473232
63X7745	GARLK	417556*
63X7746	GARLK	450908=
63X7747	GARLK	417484!
63X7749	GARLK	417534*
63X775	GARLK	481864
63X7752	GARLK	471760*
63X7758	GARLK	417601*
63X7759	GARLK	457874
63X7764	GARLK	416273!
63X7765	GARLK	418028
63X7765	GARLK	455137!
63X7767	GARLK	471829
63X7768	GARLK	450307*
63X777	GARLK	481864
63X7772	GARLK	455820*
63X7774	GARLK	415227!*
63X7775	GARLK	455556*
63X7776	GARLK	415458!
63X7776F1	GARLK	415458!
63X778	GARLK	474274
63X7780	GARLK	415128*
63X7783	GARLK	417604*
63X7784	GARLK	417181!*
63X7785	GARLK	455123*
63X7786	GARLK	455123*
63X7787	GARLK	417351!
63X7791	GARLK	416339
63X7791	GARLK	455031!
63X7795	GARLK	417247!*
63X7796	GARLK	455584*
63X78	GARLK	471532
63X780	GARLK	474274
63X7803	GARLK	415196!*
63X781	GARLK	450275
63X7812	GARLK	416345!
63X7812	GARLK	455033
63X7814	GARLK	415035
63X7819	GARLK	416167!
63X782	GARLK	450275
63X7824	GARLK	415090*
63X7825	GARLK	417597*
63X7829	GARLK	416664!
63X7829F1	GARLK	416664!
63X783	GARLK	450275
63X7831	GARLK	471646!
63X7837	GARLK	417513*
63X7839	GARLK	417252*
63X7840	GARLK	55357*
63X7842	GARLK	472020*
63X7846	GARLK	482089=
63X7861	GARLK	415196!*
63X7864	GARLK	450285*
63X787	GARLK	473444
63X7873	GARLK	473231
63X7877	GARLK	415066*
63X7879	GARLK	417780*
63X788	GARLK	473444
63X7880	GARLK	416556!
63X7880	GARLK	472157
63X789	GARLK	473444
63X79	GARLK	473405*
63X790	GARLK	473231
63X7907	GARLK	470950!
63X7907	GARLK	6241S
63X7909	GARLK	417602!*
63X7915	GARLK	471835!
63X792	GARLK	473231
63X7922	GARLK	55223*=
63X793	GARLK	473367
63X793	GARLK	473367!
63X7934	GARLK	55469*
63X7937	GARLK	2081
63X7941	GARLK	455509*
63X799	GARLK	450260*
63X7993	GARLK	417273*
63X80	GARLK	473405
63X805	GARLK	450073*
63X8063	GARLK	350974!
63X8067	GARLK	472644
63X8074	GARLK	471827!*
63X808	GARLK	450284=
63X8081	GARLK	450819*
63X81	GARLK	471558
63X810	GARLK	450284=
63X8102	GARLK	455556*
63X8104	GARLK	472299*
63X8111	GARLK	417196!*
63X8112	GARLK	417511
63X8117	GARLK	415023
63X8120	GARLK	415371*
63X8127	GARLK	416891!*
63X8128	GARLK	417355!*
63X8129	GARLK	470774!
63X8131	GARLK	450285*
63X8135	GARLK	473227
63X8140	GARLK	455462*
63X8151	GARLK	415991
63X8151	GARLK	455146!
63X8153	GARLK	415458!
63X8154	GARLK	416404!*
63X8156	GARLK	417171!*
63X8161	GARLK	415045!*
63X8165	GARLK	415066*
63X8169	GARLK	457874*
63X8173	GARLK	416077*
63X8187	GARLK	472475*
63X8187R1	GARLK	472475
63X8188	GARLK	455019!*
63X8192	GARLK	417273*
63X82	GARLK	471558*
63X820	GARLK	450415*
63X8205	GARLK	417596
63X8208	GARLK	417513*
63X8213	GARLK	472636!
63X8214	GARLK	455820*
63X8222	GARLK	417621!
63X8224	GARLK	455191*
63X8231	GARLK	417191
63X8231	GARLK	456585
63X8233	GARLK	476470*
63X8238	GARLK	417606*
63X8243	GARLK	415072*
63X8245	GARLK	417487
63X8248	GARLK	470950!
63X8248	GARLK	6241S
63X8251	GARLK	417596*
63X8252	GARLK	415294!
63X826	GARLK	473233!
63X8262	GARLK	415124*
63X8265	GARLK	481792*
63X8266	GARLK	473444
63X8267	GARLK	471551!
63X827	GARLK	473233!
63X8270	GARLK	410308!
63X8272	GARLK	471472!
63X8274	GARLK	473239
63X8275	GARLK	450165
63X8275	GARLK	471801!
63X8278	GARLK	416153!
63X828	GARLK	473233!

! Industrial Size/Type * Minor Width Difference

= The U.S. customer service number is 877-4-TIMKEN. The Canadian customer service numbers are 800-565-4927 (English) and 800-565-0438 (French-Canadian).

Mfr. No.	Name	Zero Duplication or Recommended Industrial
63X8280	GARLK	415379
63X8280	GARLK	415379!
63X8284	GARLK	474256
63X829	GARLK	473445*
63X8292	GARLK	473458!*
63X8293	GARLK	473238!*
63X8300	GARLK	415327*
63X8306	GARLK	416107!
63X8306	GARLK	455073
63X8309	GARLK	417538*
63X8310	GARLK	417539!*
63X8311	GARLK	415437
63X8311	GARLK	415437!
63X8312F1	GARLK	471750!
63X8314	GARLK	471765!
63X8328	GARLK	455197N*
63X8330	GARLK	416154!*
63X8331	GARLK	417258*
63X8342	GARLK	450557
63X8342	GARLK	471255!
63X835	GARLK	473234
63X8353	GARLK	476535
63X836	GARLK	473234
63X837	GARLK	473234
63X838	GARLK	473235!*
63X8384	GARLK	415867*
63X8396	GARLK	415937!*
63X840	GARLK	473235!
63X8400	GARLK	415142*
63X8401	GARLK	473454
63X8404	GARLK	413469!*
63X8409	GARLK	471633!*
63X841	GARLK	474265
63X8410	GARLK	417512*
63X8416	GARLK	410737!
63X8417	GARLK	455584*
63X8419	GARLK	415138!*
63X842	GARLK	474265
63X8423	GARLK	415072*
63X843	GARLK	474265
63X8430	GARLK	456105*
63X8437	GARLK	55301S*
63X844	GARLK	473236!*
63X8442	GARLK	417252*
63X8443	GARLK	416229*
63X845	GARLK	473236!*
63X846	GARLK	473236!
63X8460	GARLK	416891!*
63X8462	GARLK	415090*
63X8466	GARLK	417509*
63X8469	GARLK	415871*
63X8470	GARLK	417159*
63X8471	GARLK	417556*
63X8477	GARLK	455026*
63X8488	GARLK	455566*
63X8494	GARLK	415482*
63X8498	GARLK	471341!
63X8521	GARLK	412040*
63X8529	GARLK	417597*
63X853	GARLK	473446
63X8530	GARLK	416664!
63X854	GARLK	473446
63X855	GARLK	473446*
63X8551	GARLK	416149*
63X8556	GARLK	417507
63X8556	GARLK	417507!
63X8560	GARLK	417604*
63X8566	GARLK	455576!*
63X8569	GARLK	471818*
63X8570	GARLK	415263*
63X8571	GARLK	413248
63X8572	GARLK	472029*
63X8573	GARLK	415001!
63X8579	GARLK	417601*
63X8585	GARLK	415072*
63X859	GARLK	471981
63X8591	GARLK	415871*
63X8592	GARLK	417211!*
63X8596	GARLK	455584*
63X85X10	SIMRT	63X85X10
63X85X10SC	TRSCM	63X85X10
63X85X10TC	TRSCM	63X85X10
63X8608	GARLK	455022*
63X861	GARLK	471981
63X862	GARLK	50327
63X8628	GARLK	417542*
63X8629	GARLK	417539!*
63X8631	GARLK	416167!
63X8633	GARLK	416154!*
63X8635	GARLK	455197N*
63X8636	GARLK	415196!*
63X8638	GARLK	417205!*
63X8640	GARLK	415984!*
63X8643	GARLK	472572!
63X8646	GARLK	450068*
63X8652	GARLK	50254*=
63X8657	GARLK	417262!
63X8662	GARLK	417020*
63X8663	GARLK	417541*
63X8665	GARLK	417603!*
63X8668	GARLK	455685*
63X8676	GARLK	417159
63X8678	GARLK	417366!*
63X8679	GARLK	455151*
63X8680	GARLK	415227!*
63X8681	GARLK	417501*
63X8682	GARLK	470645*
63X8683	GARLK	417511*
63X8687	GARLK	415128*
63X8696	GARLK	417485*
63X8697	GARLK	417509*
63X8698	GARLK	455297*
63X87	GARLK	471466!
63X8700	GARLK	418028
63X8700	GARLK	455137!
63X8704	GARLK	470625!
63X8705	GARLK	480281!
63X8708	GARLK	417780*
63X871	GARLK	450068*
63X8712	GARLK	415645!
63X8712	GARLK	455104
63X8724	GARLK	473463*
63X8726	GARLK	417349*
63X8728	GARLK	470605!*
63X8731	GARLK	417356!
63X8731	GARLK	455188
63X8732	GARLK	473239
63X8734	GARLK	471820*
63X8736	GARLK	415072*
63X8738	GARLK	470565!*
63X874	GARLK	50075*=
63X8744	GARLK	417357
63X8744	GARLK	455192!
63X8745	GARLK	416891!*
63X8747	GARLK	415867*
63X8752	GARLK	417362!*
63X8755	GARLK	55223*=
63X8756	GARLK	417020*
63X8757	GARLK	417494*
63X8758	GARLK	417020*
63X877	GARLK	50191*
63X8775	GARLK	417298*
63X8778	GARLK	416163*
63X8780	GARLK	415991
63X8780	GARLK	455146!
63X8787	GARLK	415259!*
63X8790	GARLK	473441*
63X8797	GARLK	413247!
63X88	GARLK	471466!
63X8819	GARLK	455406!*
63X8824	GARLK	417254*
63X8825	GARLK	416891!*
63X8828	GARLK	455462*
63X8830	GARLK	415559*
63X8833	GARLK	416664!
63X8836	GARLK	417171!*
63X8845	GARLK	417541*
63X8846	GARLK	417547*
63X8847	GARLK	417497*
63X8848	GARLK	410987!*
63X8856	GARLK	417537*
63X886	GARLK	50081*
63X8864	GARLK	418028
63X8864	GARLK	455137!
63X8868	GARLK	417605*
63X887	GARLK	50081*
63X8870	GARLK	415683*
63X8875	GARLK	50327*
63X8879	GARLK	450593!
63X8881	GARLK	416556!
63X8881	GARLK	472157
63X8886	GARLK	470596*
63X8887	GARLK	471413
63X8903	GARLK	417191
63X8903	GARLK	456585
63X8904	GARLK	416107!
63X8904	GARLK	455073
63X8907	GARLK	415045!*
63X8912	GARLK	417542*
63X8917	GARLK	415090*
63X895	GARLK	470086*
63X898	GARLK	471504!
63X899	GARLK	471504!
63X900	GARLK	471504!
63X9009	GARLK	471688*
63X9013	GARLK	352541*
63X904	GARLK	472164!
63X905	GARLK	472164*
63X906	GARLK	472164!
63X907	GARLK	472185!
63X909	GARLK	472185!
63X9093F1	GARLK	470605!
63X90X10	FORSH	63X90X10
63X90X10	SIMRT	63X90X10
63X90X10SC	TRSCM	63X90X10
63X90X10TC	TRSCM	63X90X10
63X91	GARLK	471255!
63X910	GARLK	470334!
63X911	GARLK	470334!
63X912	GARLK	470334!
63X913	GARLK	472179
63X914	GARLK	472179
63X915	GARLK	472179
63X916	GARLK	473447
63X918	GARLK	473447
63X919	GARLK	470334!
63X919	GARLK	50289
63X92	GARLK	471255!
63X921	GARLK	470334!
63X921	GARLK	50289
63X922	GARLK	471141!
63X923	GARLK	471141!
63X9234F1	GARLK	473445
63X924	GARLK	471141!
63X925	GARLK	473448
63X927	GARLK	473448
63X928	GARLK	471984*
63X93	GARLK	471564
63X930	GARLK	471984
63X931	GARLK	473313
63X933	GARLK	473313
63X9345	GARLK	471733
63X94	GARLK	471564*
63X940	GARLK	50266*
63X943	GARLK	450269*
63X946	GARLK	450285*
63X9481	GARLK	417486
63X949	GARLK	471866!*
63X95	GARLK	471612
63X9501	GARLK	330385!
63X951	GARLK	471866!
63X9515	GARLK	471267!*
63X958	GARLK	473448*
63X96	GARLK	471612
63X961	GARLK	471984*
63X9633	GARLK	480281!
63X964	GARLK	473313
63X97	GARLK	481528
63X976	GARLK	472070*
63X978	GARLK	472070
63X979	GARLK	471866!
63X98	GARLK	481528
63X982	GARLK	473449
63X9833F1	GARLK	471192
63X984	GARLK	473449
63X987	GARLK	480281!
63X988	GARLK	450269*
63X991	GARLK	473450
63X9943F1	GARLK	471829
64	AU-WS	412040
64	B-L-H	412040
6400	C-R	16X22X4
64001	VIC	350364
640087	CONTI	471103!
64010	VIC	471103!
64021	VIC	471750!
64022	VIC	471224!
640230	CATER	471341!
640230	GERL	471341!
64024	VIC	471787!
64029	VIC	471224!
6403	C-R	16X24X5!
6403	C-R	16X24X6
64030	VIC	6863S!
640335	WILYS	470059
640335	WILYS	470380!
640345	WILYS	471801!
64035	VIC	471689!
64038	VIC	8660S
640383	WILYS	340797
6404	C-R	221607
64042	VIC	450984
64045	VIC	8460N
640454	WHITE	416130!
640454D5	DIA	416130!
64046	VIC	471504
640463	WILYS	473232
64047	VIC	6863S!
640478	CATER	345035
640479	CATER	345035
64048	VIC	472070
64049	VIC	471733
6405	C-R	16X24X7
64050	VIC	471733
64051	VIC	471442!
64054	VIC	471652
640545	AMC	471801!
640545	WILYS	471801!

! Industrial Size/Type * Minor Width Difference

= The U.S. customer service number is 877-4-TIMKEN. The Canadian customer service numbers are 800-565-4927 (English) and 800-565-0438 (French-Canadian).

Mfr. No.	Name	Zero Duplication or Recommended Industrial
64055	*VIC*	**471526**!
640555	*WILYS*	**472179**
640561	*WILYS*	**472179**
64059	*VIC*	**350936**
6406	*C-R*	16X28X7
64061	*VIC*	**471692**!
64062	*VIC*	**471692**!
64063	*VIC*	**473179**!
64064	*VIC*	5126
64066	*VIC*	**473459**
64066	*VIC*	**473459**!
64068	*DENCO*	**415045**!
64068	*VIC*	9406S
6407	*C-R*	16X28X7V
64075	*VIC*	**471692**!
64076	*VIC*	**472705**!
64077	*VIC*	**471763**
640777	*BENDI*	**456105**
640778	*BENDI*	**416125**!
640779	*BENDI*	**473426**
64078	*VIC*	**471281**!
6408	*C-R*	16X26X7!
6408	*C-R*	710243
64081	*VIC*	**416706**!
64083	*VIC*	**416706**!
64084	*VIC*	**416706**
64085	*VIC*	**416706**!
64086	*VIC*	**416364**!
64087	*VIC*	**471532**
64088	*VIC*	**416364**!
640885	*WILYS*	6465
6408S	*SPG*	**471442**!
6409	*C-R*	16X28X7V
64090	*VIC*	**471413**!
64092	*VIC*	**470380**!
64094	*VIC*	**473228**
64095	*VIC*	**473228**!
640959	*VIC*	42763
64096	*VIC*	**471466**!
640977	*CATER*	6872S
64098	*VIC*	**471264**!
640983	*CATER*	6481=
64099	*VIC*	**473237**!
641	*C-R*	5M544
6410	*C-R*	16X28X7!
6410	*C-R*	221610
64101	*AT SU*	8705S
64101	*VIC*	**471255**!
64101S	*TROS*	8705S
64107	*VIC*	**470530**!
64108	*VIC*	**470530**!
64109	*VIC*	**471538**!
6411	*C-R*	16X28X7
64116	*VIC*	**415960**
64117	*VIC*	**415960**!
64119	*VIC*	**415960**
6412	*C-R*	16X28X7!
6412	*C-R*	221610
64122	*VIC*	415269=
64126	*VIC*	**470954**!
64129	*AM WH*	**472144**!
64129	*VIC*	**415295**
6413278B	*HERCU*	**472924**=
64133	*VIC*	324941
64135	*VIC*	**471554**!
641365	*WILYS*	6465
64137	*VIC*	**471567**!
641383	*SPICE*	40769S
641383	*WILYS*	40769S
64139	*VIC*	**471498**
6413S	*NATL*	483054N
64140	*VIC*	**471643**!
64142	*VIC*	**471684**!
64143	*VIC*	**415867**
64144	*VIC*	473406!
64147	*VIC*	342805
64148	*VIC*	39807
64150	*VIC*	**471231**!
64153	*HYST*	**473425**
64159	*VIC*	**472164**!
64162	*VIC*	353131
64162	*VIC*	**471231**!
64165	*VIC*	**415072**
64173	*VIC*	**470954**!
64174	*VIC*	481534
6418	*C-R*	16X30X7!
6418	*C-R*	221620
6418SS	*JN-MN*	**471567**!
64191	*VIC*	353132
64193	*VIC*	**471267**!
64195	*VIC*	712270
64196	*VIC*	**471570**!
64199	*VIC*	350877
64199	*VIC*	**471633**!
6419SS	*JN-MN*	**473231**!
6420	*C-R*	16X30X7
64200	*VIC*	**471646**!
64202S	*TROS*	8660S
64203	*VIC*	204035
64203S	*TROS*	8940S
64209	*VIC*	41461S
6421	*C-R*	16X30X7V!
6421	*C-R*	**481528**
64210	*VIC*	323133
64213	*CROWN*	200885
64220	*TROS*	9569S
64221	*TROS*	51322
64222	*VIC*	**471571**
64223D	*IH*	**472157**
64223D	*IH*	**472157**!
64225	*VIC*	370013A
64227	*VIC*	370012A
64231	*VIC*	370029A
642311	*CHRYS*	50490=
64234	*VIC*	370008A
64236	*VIC*	**417247**!
64238	*VIC*	**417541**
6423LPD	*JN-MN*	**415995**!
6423LUP	*JN-MN*	**415995**!
6424	*SPG*	**472354**!
64242	*VIC*	1010=
64242	*VIC*	**472311**!
64245	*VIC*	**471224**!
64246	*VIC*	**455008**
64247	*VIC*	**471649**!
6424LA	*JN-MN*	**473419**
6425	*C-R*	16X30X7V
64250	*VIC*	**471689**!
64258	*VIC*	**471760**
6426	*C-R*	16X30X7!
6426	*C-R*	221620
64261	*VIC*	**471619**!
64262	*VIC*	J1134
642649	*BENDI*	**473367**!
642649	*BENDI*	**473367**
64281	*VIC*	**471765**!
64284	*VIC*	**471651**
64295	*VIC*	**471762**!
6430	*C-R*	16X32X7
64314	*VIC*	**472560N**!
64315	*VIC*	**471652**
64317	*VIC*	470328
64317	*VIC*	**481213**!
64317W	*DIA*	240151
64320	*VIC*	**470712**!
64323	*VIC*	204020
64323	*VIC*	204505!
64324	*VIC*	**471763**
643247C91	*IH*	**416664**=
6432LPD	*JN-MN*	**417073***
6432LUP	*JN-MN*	**417073**
64335	*DENCO*	**415058**
64346	*HYST*	**471765**!
64346	*VIC*	**472475**
64347	*VIC*	**473426**
64349	*VIC*	**471765**!
6435	*C-R*	16X32X7
64353	*VIC*	**471354**!
64360S	*TROS*	7686S
64362	*VIC*	453510
64368	*ALLCH*	**327303**!
64382	*VIC*	353135
64382	*VIC*	**474278**!
64385	*VIC*	**471737**
643882	*CATER*	**470898**
64395	*VIC*	**471795**
6439SS	*JN-MN*	17X40X7
6440	*C-R*	16X35X7
644023	*GERL*	**415027**
644023	*GERL*	**415027**!
64402S	*TROS*	8610
64405	*VIC*	353137
64405	*VIC*	**473424**
644071	*MANT*	J1121
644119	*GERL*	**472924**!
64414	*VIC*	370001A
64415	*VIC*	370124A
6442	*C-R*	16X35X7!
644236X1	*IH*	6703S
64424	*VIC*	**471765**!
644254	*WILYS*	40286
644284	*AMC*	**471766**!
644284	*WILYS*	**471766**!
64433	*VIC*	**473228**!
64434	*VIC*	**417698**
64437	*VIC*	370057A
64443	*VIC*	370030A
64443	*VIC*	455861=
64446	*VIC*	**323138**!
64448	*VIC*	**472354**!
644538	*WILYS*	340787
64454	*VIC*	**471192**
64456	*VIC*	370002A
64460	*VIC*	**418028**
64461	*VIC*	J1401=
64462	*VIC*	**473231**!
64464	*VIC*	370145A
64468	*VIC*	370007A
64471	*VIC*	**417172**
644777	*BENDI*	**416288**!
64482	*VIC*	**415958**
644830	*BENDI*	**471689**!
644831	*BENDI*	**473444**
644832	*BENDI*	**450593**!
64484	*VIC*	**415960**!
644856	*CHRYS*	**470354**
64487	*AM WH*	**473214**!
64487	*VIC*	**417134**
64488	*AM WH*	**417343**!
644881	*BENDI*	**471733**
64489	*VIC*	J1120*=
64491	*VIC*	370011A
64494	*VIC*	**474276**!
64495	*VIC*	370033A
64496	*VIC*	**481163**!
644K1	*WHITE*	240151
645	*C-R*	**410987**
64500	*C-R*	165X190X13!
64501R	*TROS*	**473179**
64502	*VIC*	**455336**
645058R91	*IH*	**480630**!
64507	*VIC*	J1606
64511	*VIC*	370012A
64517	*VIC*	370048A
64517	*VIC*	380048A
64523	*VIC*	44052
64529	*VIC*	**450593**!
64530	*VIC*	370001A
64533	*VIC*	J1119
64534	*VIC*	370054A
64538	*VIC*	370132A
64539	*VIC*	370131A
64539	*VIC*	455685
6453LA	*JN-MN*	**450472**!
64540	*VIC*	J1238*=
64541	*VIC*	370011A
64542	*VIC*	**415371**
64546	*VIC*	370006A
6454G	*P-C*	TCS45472
6454LA	*JN-MN*	**416654**!
6455	*C-R*	710261
64550001	*DANA*	JX1238=
64551	*EATON*	**410737**!
64553	*VIC*	370021A
64558	*VIC*	370047A
64560	*VIC*	**481181**!
64561	*VIC*	370046A
64562	*VIC*	**473231**!
64564	*VIC*	370046A
64566	*VIC*	370106A
64567	*VIC*	370019A
64568	*VIC*	J1131
645681	*ALLCH*	**415725**!
6456LA	*JN-MN*	**455026**
64570	*VIC*	J1138
64571	*VIC*	**416865**
64572	*VIC*	3095
64572	*VIC*	3103
64573	*VIC*	3103!
64579	*VIC*	**472397**!
6457LA	*JN-MN*	**415259**!
6457S	*SPG*	370002A
64581	*VIC*	J1137=
64584	*VIC*	**417505**
64585	*VIC*	J1128
64589	*VIC*	**417506**
645891	*WILYS*	240385
64592	*VIC*	2669
64592	*VIC*	**472475**
64595	*VIC*	9912
645980	*WILYS*	5MR1300
646007	*CATER*	**415035**
646007	*CATER*	**415035**!
64601	*VIC*	353141!
646015	*GERL*	**417596**
64601S	*TROS*	**472082**
64602	*AM WH*	**417563**
64603	*VIC*	370034A
646059	*CHRYS*	**472560N**!
6460LA	*JN-MN*	**417273**
646110M1	*MASSE*	**471316**
6461LA	*JN-MN*	**416167**!
646239	*WILYS*	6465
64635	*VIC*	6703S
64636	*VIC*	**473237**!
64638	*VIC*	**472164**!
6464	*HYST*	**417316**!
64646	*VIC*	**472179**

! Industrial Size/Type * Minor Width Difference

= The U.S. customer service number is 877-4-TIMKEN. The Canadian customer service numbers are 800-565-4927 (English) and 800-565-0438 (French-Canadian).

Mfr. No.	Name	Zero Duplication or Recommended Industrial
64656	*EATON*	**416654**
64679	*EATON*	**416271**
64680	*EATON*	712375
646851	*ALLCH*	**471466**!
64687D	*IH*	**472397**!
64688D	*IH*	**415995**!
64697	*VIC*	**473231**!
6470	*C-R*	16X38X7
647217R91	*IH*	**415085**!
647217R91	*IH*	456648
64730	*VIC*	**417158**!
647400R91	*IH*	5976S
647468	*WILYS*	**471504**
6474SS	*JN-MN*	30X62X7*
6475	*VICK*	**471442**!
64754	*VIC*	450073
64780	*HYST*	**471765**!
64780	*VIC*	**352541**
647829	*BENDI*	**450039**
647830	*BENDI*	**471276**
64794	*VIC*	225230*
64794	*VIC*	52X72X8!
6480	*C-R*	16X40X7
648008A	*HARWA*	64X80X8!
648029	*CATER*	**417134**
648029	*TMTR*	**417134**
6481	*C-R*	16X40X7
648149	*GMC*	**412119**!
6482134	*DURA*	**470954**!
64853210	*TROS*	**416107**!
64853210	*TROS*	455073
648620	*ALLCH*	**416345**!
648620	*ALLCH*	455033
6487	*HYST*	**416865**!
64895HA	*IH*	**412871**!
649010A	*HARWA*	64X90X13
64901S	*TROS*	8750S
649020	*CATER*	**472705**!
649266	*ALLCH*	**415995**!
649299R91	*IH*	**415697**!
649299R91	*IH*	455547
649352	*WILYS*	**473228**
64935D	*IH*	**455005**
649406	*CATER*	416043
649463-1	*SPICE*	**450040**
649463-2	*SPICE*	**473238**
649463-3	*SPICE*	**413247**!
649463-4	*SPICE*	**415449**!
649463-5	*SPICE*	**415379**
649463-5	*SPICE*	**415379**!
649463-6	*SPICE*	**471692**!
6494G	*P-C*	TCS45472
6494LA	*JN-MN*	**473245**!
649574	*GMC*	**481163**!
649591	*GMC*	**417505**
6495S	*NATL*	**455566**
64992	*C-R*	**415294**!
64993	*C-R*	**415294**!*
64994	*C-R*	**415294**!*
64995	*C-R*	**415294**!
6499SS	*JN-MN*	**254287**
64SD-53	*IG-RA*	**417316**!
64X3921	*GARLK*	**417601***
64X3926	*GARLK*	**417602**!*
64X3938	*GARLK*	**417604***
64X3944	*GARLK*	**417567***
64X3952	*GARLK*	**415128***
64X3953	*GARLK*	455129*
64X3954	*GARLK*	**455462***
64X3955	*GARLK*	**415090***
64X3962	*GARLK*	55218*=
64X3968	*GARLK*	**415219***
64X3984	*GARLK*	**417606***
64X3985	*GARLK*	55078S*
64X3997	*GARLK*	**417020***
64X3998	*GARLK*	**417020***
64X4009	*GARLK*	**417570***
64X4011	*GARLK*	457997
64X4017	*GARLK*	**415227**!*
64X4031	*GARLK*	55228*=
64X4036	*GARLK*	**415482***
64X4057	*GARLK*	**415077**
64X4063	*GARLK*	**415076***
64X4072	*GARLK*	**417608**
64X4499	*GARLK*	**415124***
64X4500	*GARLK*	**417022***
64X4610	*GARLK*	415871
64X80X8	*FORSH*	64X80X8
64X80X8	*SIMRT*	64X80X8
64X80X8SC	*TRSCM*	64X80X8
64X80X8TC	*TRSCM*	64X80X8
64X90X13	*SIMRT*	64X90X13
65-00029	*VERA*	473823
65-00052	*VERA*	1167
65-00060	*VERA*	1173
65-00094	*VERA*	223014
65-00250	*VERA*	**471192**
65-00268	*VERA*	**471766**!
65-00300	*VERA*	**473367**
65-00334	*VERA*	1952
65-00342	*VERA*	**470487**!
65-00409	*VERA*	1956
65-00417	*VERA*	228010
65-00433	*VERA*	222242
65-00441	*VERA*	1165
65-00466	*VERA*	223535
65-00482	*VERA*	223014
65-00508	*VERA*	226480
65-00516	*VERA*	1962
65-00532	*VERA*	1195
65-00565	*VERA*	32X58X8!
65-00615	*VERA*	1188
65-00631	*VERA*	494122
65-00664	*VERA*	1192
65-00722	*VERA*	1974
65-00839	*VERA*	**471224**!
65-00862	*VERA*	228010
65-00920	*VERA*	1996
65-01042	*VERA*	**471224**!
65-01067	*VERA*	**480630**!
65-01083	*VERA*	**472397**!
65-01091	*VERA*	1959
65-01125	*VERA*	1950
65-01133	*VERA*	224015
65-01141	*VERA*	1176
65-01185	*VERA*	2002
65-01216	*VERA*	**470898**
65-01265	*VERA*	**473234**!
65-01281	*VERA*	1177
65-01315	*VERA*	1960
65-01398	*VERA*	224252
65-01430	*VERA*	1196
65-01455	*VERA*	3698
65-01463	*VERA*	**472164**!
65-01513	*VERA*	1984
65-01588	*VERA*	**473234**!
65-01612	*VERA*	**473228**!
65-01638	*VERA*	1183
65-01679	*VERA*	2002
65-01711	*VERA*	1873
65-01745	*VERA*	**471195**!
65-01778	*VERA*	1967
65-01786	*VERA*	1209
65-01794	*VERA*	3771
65-01802	*VERA*	1981
65-01893	*VERA*	**471224**!
65-01943	*VERA*	224320
65-01984	*VERA*	1097N
65-01992	*VERA*	**472164**
65-02015	*VERA*	**472397**!
65-02043	*VERA*	24X35X7
65-02049	*VERA*	24X35X7
65-02155	*VERA*	223620
65-02189	*VERA*	**472213**
65-02239	*VERA*	**471870**!
65-02288	*VERA*	228010
65-02395	*VERA*	**471224**!
65-02429	*VERA*	5778
65-02486	*VERA*	1110
65-02650	*VERA*	222242
65-02817	*VERA*	203006!
65-02858	*VERA*	474134
65-02882	*VERA*	1938
65-02890	*VERA*	1943
65-02900	*VERA*	494117
65-02908	*VERA*	494117
65-03020	*VERA*	3771
65-03038	*VERA*	3771
65-03087	*VERA*	3476
65-03103	*VERA*	1949
65-03111	*VERA*	473812
65-03129	*VERA*	**473179**!
65-03137	*VERA*	1939
65-03228	*VERA*	1990
65-03426	*VERA*	2016
65-03434	*VERA*	334111
65-03442	*VERA*	2003N!
65-03459	*VERA*	444116
65-03467	*VERA*	1985
65-03475	*VERA*	1986
65-03509	*VERA*	225540
65-03558	*VERA*	494123
65-03582	*VERA*	224015
65-03616	*VERA*	**415984**!
65-03673	*VERA*	223035
65-03715	*VERA*	482126
65-03798	*VERA*	710060
65-03814	*VERA*	224025
65-03822	*VERA*	1960
65-03830	*VERA*	474134
65-04050	*VERA*	1987
65-04068	*VERA*	225220
65-04100	*VERA*	5696
65-04142	*VERA*	5695
65-04258	*VERA*	**471870**!
65-04266	*VERA*	1937
65-04274	*VERA*	494117
65-04282	*VERA*	1952
65-04290	*VERA*	413818
65-04308	*VERA*	1949
65-04431	*VERA*	225650
6500	*NATL*	**471829**
65000	*C-R*	**415294**!
6500011	*VERA*	**1213N**
6500037	*VERA*	1994
6500037	*VERA*	48X70X9!
65000U	*TRISL*	370048A
65000U	*TRISL*	380048A
65001	*VIC*	**350364**
6500136	*VERA*	1012
6500136	*VERA*	1012N
6500136	*VERA*	45X62X8!
6500169	*VERA*	222510
6500169	*VERA*	25X35X7!
6500193	*VERA*	224520
6500193	*VERA*	45X60X10!
65002	*C-R*	**415294**!
6500201	*VERA*	1174
6500201	*VERA*	38X52X8.5!
6500284	*VERA*	225230
6500284	*VERA*	52X72X8!
6500318	*VERA*	1953
6500318	*VERA*	42X60X7!
6500326	*VERA*	471289=
6500326	*VERA*	**473230**
6500557	*VERA*	223555
6500557	*VERA*	35X64X8!
6500581	*VERA*	**472287**!
6500599	*VERA*	224045
6500599	*VERA*	40X62X12!
6500623	*VERA*	1973
6500623	*VERA*	48X65X10!
6500706	*VERA*	1174
6500706	*VERA*	38X52X8.5!
6500714	*VERA*	1012
6500714	*VERA*	1012N
6500714	*VERA*	45X62X8!
6500763	*VERA*	224270
6500763	*VERA*	42X72X10!
6500771	*VERA*	224045
6500771	*VERA*	40X62X12!
6500789	*VERA*	223542
6500789	*VERA*	35X55X11!
6500821	*VERA*	224470
6500821	*VERA*	44X72X10!
6500854	*VERA*	55X82X12!
6500870	*VERA*	227550
6500870	*VERA*	75X100X12!
6500888	*VERA*	1955
6500888	*VERA*	52X65X9!
6500896	*VERA*	225020
6500896	*VERA*	50X68X8!
6500904	*VERA*	224820
6500904	*VERA*	48X62X8!
6500946	*VERA*	1187
6500946	*VERA*	47X68X10!
6500953	*VERA*	1012
6500953	*VERA*	1012N
6500979	*VERA*	**1213N**
6501	*ALOY*	5123
65010	*C-R*	**416229**
6501000	*VERA*	1181
6501000	*VERA*	41X56X7!
6501018	*VERA*	1181
6501018	*VERA*	41X56X7!
6501026	*VERA*	224015
6501026	*VERA*	40X52X7!
6501034	*VERA*	224015
6501034	*VERA*	40X52X7!
65011	*C-R*	**416229**
6501103	*VERA*	224560
6501103	*VERA*	45X68X7!
6501109	*VERA*	224560
6501109	*VERA*	45X68X7!
6501117	*VERA*	1180
6501117	*VERA*	41X55X7!
6501158	*VERA*	223010
6501158	*VERA*	30X42X7!
6501208	*VERA*	224835
6501208	*VERA*	48X68X10!
6501224	*VERA*	**451948**
6501273	*VERA*	223840
6501273	*VERA*	38X58X8!
6501299	*VERA*	223840
6501299	*VERA*	38X58X8!
6501307	*VERA*	223542
6501307	*VERA*	35X55X11!
6501364	*VERA*	**472258**!

! Industrial Size/Type * Minor Width Difference

= The U.S. customer service number is 877-4-TIMKEN. The Canadian customer service numbers are 800-565-4927 (English) and 800-565-0438 (French-Canadian).

Mfr. No.	Name	Zero Duplication or Recommended Industrial
6501414	*VERA*	224835
6501414	*VERA*	48X68X10!
6501547	*VERA*	1012
6501547	*VERA*	1012N
6501554	*VERA*	226020
6501554	*VERA*	60X80X8!
6501570	*VERA*	224820
6501570	*VERA*	48X62X8!
6501646	*VERA*	1174
6501646	*VERA*	38X52X8.5!
6501703	*VERA*	224820
6501752	*VERA*	1208
6501752	*VERA*	48X72X7!
6501810	*VERA*	**473238**
6501919	*VERA*	**350936**
6501950	*VERA*	223830
6501950	*VERA*	38X55X7!
6501SS	*JN-MN*	350156
6501SS	*JN-MN*	**473096**
6502023	*VERA*	224235
6502064	*VERA*	1969
6502064	*VERA*	48X63X9!
6502080	*VERA*	**451857**
65021	*C-R*	**416229***
6502148	*VERA*	224025
6502148	*VERA*	24X35X7!
6502171	*VERA*	1994
6502171	*VERA*	48X70X9!
6502197	*VERA*	227040
6502197	*VERA*	70X90X10!
65022	*VIC*	9845
6502270	*VERA*	2001
6502270	*VERA*	60X82X12!
6502296	*VERA*	2001
6502296	*VERA*	60X82X12!
6502346	*VERA*	**471785**!
6502361	*VERA*	227040
6502361	*VERA*	70X90X10!
65025	*C-R*	**416229**
6502502	*VERA*	1174
6502502	*VERA*	38X52X8.5!
6502528	*VERA*	1174
6502528	*VERA*	38X52X8.5!
6502569	*VERA*	1012
6502569	*VERA*	1012N
6502569	*VERA*	45X62X8!
6502577	*VERA*	224045
6502577	*VERA*	40X62X12!
65025SF	*VIC*	710163
65026	*C-R*	**416229***
6502643	*VERA*	224045
6502643	*VERA*	40X62X12!
6502668	*VERA*	224045
6502668	*VERA*	40X62X12!
6502676	*VERA*	224045
6502676	*VERA*	40X62X12!
65027	*TRISL*	370106A
65027U	*TRISL*	370106A
6502825	*VERA*	1188
6502825	*VERA*	224820
6502825	*VERA*	48X62X8!
6502833	*VERA*	1955
6502833	*VERA*	52X65X9!
6502866	*VERA*	225010
6502866	*VERA*	50X65X8!
6502874	*VERA*	225110
6502874	*VERA*	51X65X7!
6502916	*VERA*	1012
6502916	*VERA*	1012N
6502932	*VERA*	225005
6502932	*VERA*	50X62X7!
6502940	*VERA*	226285
6502940	*VERA*	62X85X8!
6502946	*VERA*	226285
6502946	*VERA*	62X85X8!
6502957	*VERA*	223605
6502957	*VERA*	36X50X7!
6502973	*VERA*	223275
6502973	*VERA*	32X56X10!
65030	*C-R*	**416229**
6503095	*VERA*	716102
6503095	*VERA*	85X105X10!
65030U	*TRISL*	370069A
65030U	*TRISL*	380069A
65030W+67067J	*TRISL*	370069A
65030W+67067J	*TRISL*	380069A
6503145	*VERA*	224520
6503145	*VERA*	45X60X10!
650328	*CHRYS*	**473450**!
6503319	*VERA*	1994
6503319	*VERA*	48X70X9!
6503327	*VERA*	228020
6503327	*VERA*	80X105X13!
6503335	*VERA*	224020
6503335	*VERA*	40X55X8!
6503373	*VERA*	227020
6503373	*VERA*	70X88X8!
6503376	*VERA*	225020
6503376	*VERA*	50X68X8!
65034	*C-R*	**416229**
65035	*C-R*	**416229**
6503574	*VERA*	225005
6503574	*VERA*	50X62X7!
65036	*C-R*	**416229***
65037	*C-R*	**416229***
6503731	*VERA*	225020
6503731	*VERA*	50X68X8!
6503749	*VERA*	1945
6503749	*VERA*	228480
65038	*C-R*	**416229**
65039	*HYST*	**471765**!
6504	*ALOY*	9406S
6504	*HYST*	**415458**!
6504001	*VERA*	**1213N**
6504118	*VERA*	1180
6504118	*VERA*	41X55X7!
6504126	*VERA*	1994
6504126	*VERA*	48X70X9!
6504159	*VERA*	1180
6504159	*VERA*	41X55X7!
650426	*C-R*	455614
6505	*C-R*	**417541**
65051	*VIC*	1041
650510	*C-R*	**417550**
650512	*C-R*	**455576**!
650516	*C-R*	**417254**
65054	*C-R*	417547
65055	*EATON*	**415483**
65056T8	*C-R*	417548
65056U	*TRISL*	370003A
65056W+67094J	*TRISL*	370003A
65058	*C-R*	**415645**!
65058	*C-R*	455104
65058	*CABOT*	**415645**!
65058	*CABOT*	455104
65058	*FAIRB*	**415645**!
65058	*FAIRB*	455104
65058	*GR-DV*	**415645**!
65058	*GR-DV*	455104
65058K	*CHRYS*	**415645**!
65058K	*CHRYS*	455104
65058M1	*C-R*	**415645**!
65058M1	*C-R*	455104
6505Q6	*C-R*	**417541**
65060U	*TRISL*	386025A
65060U	*TRISL*	**416158**
65060W+67048J	*TRISL*	386025A
65060W+67048J	*TRISL*	**416158**
65061	*AMC*	**473446**
65064	*AMC*	**473446**
65065W+67094J	*TRISL*	370005A
6506SS	*JN-MN*	**471192***
6507	*SPG*	6356
65071U	*TRISL*	**415058**
65072W+67093J	*TRISL*	370021A
65073W+67036J	*TRISL*	370002A
65073W+67047J	*TRISL*	370029A
650760	*ALLCH*	**471271**=
650773	*WHITE*	**417254**
650773A3	*DIA*	**417254**
65078U	*TRISL*	370131A
650794	*ALLCH*	**470954**!
65082D	*IH*	**456105**
65085	*C-R*	457131N=
65085D	*IH*	**456105**
650893	*WHITE*	**455500**
65096	*VIC*	**471466**
6509LA	*JN-MN*	**473232**
650D5	*WHITE*	**416282**
650HA516-L	*C-R*	5473
65102S	*TROS*	8974S
65103	*SHOV*	416144
65103S	*TROS*	8975S
65105	*SHOV*	455197N
65111U	*TRISL*	370047A
65118	*ALLCH*	**471689**!
651193R91	*IH*	204038
65120	*AT SU*	9406S
65121S	*TROS*	9339S
651246	*ALLCH*	**451583**!
65126	*VIC*	**470954**!
651266	*WHITE*	**473205**
651299	*ALLCH*	**415483**
6513499	*CLARK*	**472409**!
6515000	*CLARK*	40301S
65152U	*TRISL*	370023A
65165U	*TRISL*	370005A
65170	*VIC*	**471787**!
651725	*CHRYS*	5797
65172U	*TRISL*	370021A
65179R91	*IH*	**415697**!
65179R91	*IH*	455547
65184U	*TRISL*	370019A
6519	*ALOY*	9449
6519	*SPG*	**410708**
65191	*VIC*	340413
65193	*VIC*	**471267**!
65201S	*TROS*	8835S
65202	*TROS*	8940S
6521	*ALOY*	8940S
6521	*C-R*	**481528**
652255R91	*IH*	204017
65242	*VIC*	240414*
65245	*VIC*	**471224**!
6525	*ALOY*	**473179**
6525007	*GMC*	**474278***=
6526	*C-R*	**481528**
65261U	*TRISL*	370036A
65261U	*TRISL*	370349A
65261W+67013J	*TRISL*	370036A
65261W+67013J	*TRISL*	370349A
65261W+67013J	*TRISL*	380036A
65262U	*TRISL*	370065A
65262W+67023J	*TRISL*	370065A
65262W+67023J	*TRISL*	380065A
65263	*TROS*	6638S
65263U	*TRISL*	370001A
652656	*CLARK*	**470625**!
65269W+67009J	*TRISL*	370121A
65270U	*TRISL*	**416892**
65270W+67093J	*TRISL*	**416892**
65275U	*TRISL*	370033A
652769R91	*IH*	204017
65279W+67093J	*TRISL*	**416892**
6528	*SPG*	**474255**
6528LA	*JN-MN*	**470774**!
65294U	*TRISL*	370033A
65298U	*TRISL*	370037A
65298U	*TRISL*	370338A
6530R	*JN-MN*	**455576**!*
65312	*VIC*	340815
65314	*VIC*	**472560N**
6531SS	*JN-MN*	**471567**!
6532R	*JN-MN*	**472150***
653337	*GWI*	**471737**=
6533EL	*SUL*	**415991**
6533EL	*SUL*	455146!
6533LA	*JN-MN*	**417555**!*
6533LPD	*JN-MN*	**417555**!
65340S	*TROS*	8695S
65343	*DENCO*	**415058**
653432R91	*IH*	204017
65349	*DENCO*	**416706**!
6534EL	*SUL*	**417487**
65350	*DENCO*	**415045**!
65360S	*TROS*	7687S
653632R91	*IH*	205017
65380	*VIC*	**471763**
65382	*VIC*	340356*
6538LA	*JN-MN*	**416154**!
6538LPD	*JN-MN*	**416154**!
654	*C-R*	5M867
65402S	*TROS*	**411330**!
654084C91	*IH*	**410524**
6541	*C-R*	**481537**
65418C1	*IH*	**471765**!
65441D	*IH*	**471649**!
65446	*VIC*	**323138**!*
654674R91	*IH*	200885
654686	*GMC*	370012A
654687	*GMC*	370021A
6546LA	*JN-MN*	**417349**
6547	*SHEP*	**473229**
6547LA	*JN-MN*	**415034**!
6548	*SHEP*	**472397**!
654805	*ALLCH*	**417355**!
6548LA	*JN-MN*	**471835**!
6550	*C-R*	**481537**
65501S	*TROS*	9449
65512	*DURA*	7994S
65520S	*TROS*	**470687**
6554	*C-R*	**481073**
65546	*VIC*	**323138**!*
65549AX	*OSHKO*	**417082**
65549HX	*OSHKO*	**417082**
6555	*C-R*	**481073**
655512	*CONCA*	**415991**
655512	*CONCA*	455146!
6556	*C-R*	**481073**
655619	*ALLCH*	**471192**=
65566	*AM WH*	**471391**!
6558693	*CLARK*	J1122
65589	*WAUKE*	**415025**
6558963	*CLARK*	J1122
6558R	*JN-MN*	**473227**
6559R	*JN-MN*	**471820***
6560	*C-R*	**481073***
65600D	*IH*	**417539**!

! Industrial Size/Type * Minor Width Difference

= The U.S. customer service number is 877-4-TIMKEN. The Canadian customer service numbers are 800-565-4927 (English) and 800-565-0438 (French-Canadian).

Mfr. No.	Name	Zero Duplication or Recommended Industrial
65601S	TROS	3945
6561	C-R	481073*
656115	Y-T	471466!
65628	CINMI	470682
6564	C-R	481073
65646	VIC	40183S!
6564S	SPG	415449!
656520	GMC	474276
65682	OLIVE	450341
65698R91	IH	455008
656W228-L	C-R	5403
6570	ACF	415035
6570	ACF	415035!
6570	C-R	240023
6570	HYST	415035
6570	HYST	415035!
6570LPD	JN-MN	471558
657206	ALLCH	472924!
6573S	SPG	416888!
657516R91	IH	471141!
657605	CLARK	413469!
657606	CLARK	417073
657607	CLARK	411253!
657608	CLARK	410102
657609	CLARK	470682
657610	CLARK	472636!
657611	CLARK	473447
657612	CLARK	417498
657613	CLARK	415449!
657614	CLARK	415995!
657615	CLARK	476470
657616	CLARK	473242
657617	CLARK	473245!
65762	CLARK	450497=
657621	CLARK	415960!
657622	CLARK	415007
657623	CLARK	472179
657624	CLARK	416891!
657625	CLARK	412119!
657627	CLARK	450497=
657628	CLARK	456105
657629	CLARK	471272!
657630	CLARK	415991
657630	CLARK	455146!
657810	GMC	417506
657811	GMC	417505
657812	GMC	370019A
657813	GMC	370021A
657814	GMC	370005A
657815	GMC	370007A
6580	C-R	481397*
658008A	HARWA	65X80X8
6580AS	HERCU	470712
658114	ALLCH	415449
658137R91	IH	416956
6582LA	JN-MN	417512
6582LUP	JN-MN	417512
6584	ALOY	473234
6584	ALOY	7300S
6585	ALOY	2043
6585R	JN-MN	417546!
658650R91	IH	471424!
658651R91	IH	470682
658745	CLARK	415254
6588	ALOY	8139
6588LA	JN-MN	417269!
658942	ALLCH	476470!
6589428	ALLCH	476470!
6589428	ALLCH	476470
659008	EATON	J1115
659009	EATON	J1124
659009	Y-T	J1124
65901	FWD	471224!
659010	EATON	J1130
659010	Y-T	J1130
65902	FWD	416271!
65904	FWD	472164!
65905	FWD	471870!
65906	FWD	472572!
65907	FWD	470898!
65908	FWD	50191
65908F	DIA	5406
65910	FWD	473475
659107R91	IH	471192
659108R91	IH	473229
659109R91	IH	471785!
65911	FWD	450313
659110R91	IH	412473!
659111R91	IH	471141!
659112R91	IH	470682
659113R91	IH	471424!
659114R91	IH	473229
659115R91	IH	471466!
659116R91	IH	471785!
659118R91	IH	471141!
659124R91	IH	471192
659125R91	IH	416956
65913	FWD	411253!
65914	FWD	411376!
65914	OLIVE	411376!
65916	FWD	415984!
65917	FWD	418028
65917	FWD	455137!
65918	FWD	415991
65918	FWD	455146!
65919	FWD	415991
65919	FWD	455146!
65920	FWD	415379
65920	FWD	415379!
65921	FWD	415023
65921	OLIVE	415023
65922	FWD	416339
65922	FWD	455031!
65923	FWD	415150!
65924	FWD	472157!
65924	FWD	472157
65925	FWD	415263
659258	WHITE	473226
65926	FWD	416125!
65926	OLIVE	254270
65927	FWD	415725!
65928	FWD	50405
65930	FWD	417344!
65931	FWD	472234
65933	FWD	415027
65933	FWD	415027!
65934	FWD	417191
65934	FWD	455165!
65940	FWD	411394!
65941	FWD	412040
65942	FWD	415302
65943	FWD	455005
65944	FWD	476470
65946	FWD	415045!
65948	FWD	416706!
65948	OLIVE	416706!
65950	FWD	415234!
65952	FWD	472394
65953	FWD	481163!
65955	FWD	455203
65955	OLIVE	455203
65958	FWD	473467!
65959	FWD	455249!
6596	ALOY	1192
659606	CLARK	415027
659606	CLARK	415027!
65961	TROS	412725
65963	FWD	412040
65964	FWD	471272!
65966	FWD	473450
659675	CLARK	471689!
659675R91	IH	414045!
65970	FWD	323138!
65971	FWD	418028
65971	FWD	455137!
659710R91	IH	412119!
65972	FWD	417349
65973	FWD	55030
65977	AM WH	417171!
65982	FWD	417316!
65982	JOHND	417316!
65983	FWD	416149
65983R91	IH	330385!
65986	FWD	415303!
65990	FWD	470898!
659900R91	IH	455480!
659909R91	IH	417604
65992	FWD	412119!
65993	FWD	472070
65994	FWD	481864
65995	FWD	416865!
65996	FWD	481864
65998	FWD	471649!
65W1	WHITE	412473!
65X100	GARLK	481537
65X1003	GARLK	451993=
65X1004	GARLK	451993=
65X1005	GARLK	451993=
65X100X10SC	TRSCM	65X100X10
65X100X10TC	TRSCM	65X100X10
65X100X7	ISP	65X100X7*
65X1042	GARLK	472439*
65X1043	GARLK	472439*
65X1044	GARLK	472439
65X1045	GARLK	471868
65X1047	GARLK	471868
65X1048	GARLK	472572!
65X1049	GARLK	472572!
65X1050	GARLK	472572!
65X1051	GARLK	473179!
65X1052	GARLK	473179!
65X1053	GARLK	473179!
65X1054	GARLK	414045!*
65X1055	GARLK	414045!*
65X1056	GARLK	414045!*
65X1057	GARLK	473238
65X1058	GARLK	473238
65X1059	GARLK	473238!
65X1060	GARLK	450084!
65X1062	GARLK	450084!
65X1063	GARLK	473239
65X1064	GARLK	473239
65X1065	GARLK	473239
65X1066	GARLK	473457!*
65X1067	GARLK	473457!*
65X1068	GARLK	473457!
65X1069	GARLK	473240!*
65X1070	GARLK	473240!*
65X1071	GARLK	473240!
65X1075	GARLK	473458!*
65X1076	GARLK	473458!
65X1077	GARLK	473458!*
65X109	GARLK	471529
65X110	GARLK	471529
65X111	GARLK	471538!*
65X1114	GARLK	472319
65X1115	GARLK	472319
65X1116	GARLK	472319
65X1117	GARLK	473459
65X1118	GARLK	473459
65X1119	GARLK	473459
65X112	GARLK	471538!
65X1120	GARLK	473241
65X1121	GARLK	473241
65X1122	GARLK	473241
65X1125	GARLK	450279
65X1129	GARLK	472144!
65X113	GARLK	471553!
65X1130	GARLK	472144!
65X1131	GARLK	472144!*
65X1132	GARLK	473460
65X1133	GARLK	473460
65X1134	GARLK	473460
65X1135	GARLK	472394*
65X1136	GARLK	472394*
65X1137	GARLK	472394
65X1138	GARLK	473461!*
65X1139	GARLK	473461!*
65X114	GARLK	471553!
65X1140	GARLK	473461!
65X1141	GARLK	471391!*
65X1142	GARLK	471391!*
65X1143	GARLK	471391!
65X1147	GARLK	473462
65X1148	GARLK	473462
65X1149	GARLK	473462
65X115	GARLK	471579
65X1150	GARLK	450472!*
65X1151	GARLK	450472!*
65X1152	GARLK	450472!
65X116	GARLK	471579*
65X1162	GARLK	450474*
65X1163	GARLK	450474*
65X1164	GARLK	450474*
65X1165	GARLK	50528*
65X1166	GARLK	50528*
65X1167	GARLK	50528
65X1186	GARLK	471870!
65X1187	GARLK	471870!
65X1188	GARLK	471870!
65X1189	GARLK	472492!
65X1190	GARLK	472492!
65X1191	GARLK	472492!
65X1198	GARLK	472924!
65X1199	GARLK	472924!
65X1200	GARLK	472924!
65X1201	GARLK	470530!
65X1202	GARLK	470530!
65X1203	GARLK	470530!
65X1204	GARLK	472397!
65X1205	GARLK	472397!
65X1206	GARLK	472397!
65X1207	GARLK	473463*
65X1208	GARLK	473463
65X1209	GARLK	473463
65X121	GARLK	470506!
65X1210	GARLK	473242*
65X1211	GARLK	473242*
65X1212	GARLK	473242
65X1216	GARLK	473464!
65X1216	GARLK	473464
65X1217	GARLK	473464!
65X1217	GARLK	473464
65X1218	GARLK	473464!
65X1218	GARLK	473464
65X122	GARLK	470506!
65X124	GARLK	50026*
65X1252	GARLK	451948

! Industrial Size/Type * Minor Width Difference

= The U.S. customer service number is 877-4-TIMKEN. The Canadian customer service numbers are 800-565-4927 (English) and 800-565-0438 (French-Canadian).

Mfr. No.	Name	Zero Duplication or Recommended Industrial
65X1253	GARLK	451948
65X1254	GARLK	451948*
65X1255	GARLK	473466
65X1257	GARLK	473466
65X1258	GARLK	472012*
65X1259	GARLK	472012*
65X1260	GARLK	472012
65X1261	GARLK	450307*
65X1262	GARLK	450307*
65X1263	GARLK	450307
65X1264	GARLK	450311*
65X1265	GARLK	450311*
65X1266	GARLK	450311
65X1270	GARLK	416738!
65X1270	GARLK	450096
65X1271	GARLK	416738!
65X1271	GARLK	450096
65X1272	GARLK	416738!
65X1272	GARLK	450096
65X1276	GARLK	450313
65X1278	GARLK	450313
65X1279	GARLK	450532
65X1280	GARLK	450532*
65X1281	GARLK	450532*
65X13	GARLK	330385!
65X1321	GARLK	470898
65X1322	GARLK	470898
65X1323	GARLK	470898
65X1324	GARLK	473467
65X1326	GARLK	473467
65X1327	GARLK	472015!
65X1328	GARLK	472015!
65X1329	GARLK	472015!
65X1330	GARLK	410308!
65X1331	GARLK	410308!
65X1332	GARLK	410308!
65X1333	GARLK	472016*
65X1334	GARLK	472016*
65X1335	GARLK	472016
65X1339	GARLK	472409!
65X1340	GARLK	472409!
65X1341	GARLK	472409!
65X1345	GARLK	473243
65X1346	GARLK	473243
65X1347	GARLK	473243
65X1348	GARLK	413469!*
65X1349	GARLK	413469!*
65X1350	GARLK	413469!*
65X1357	GARLK	416267!*
65X1358	GARLK	416267!*
65X1359	GARLK	416267!
65X1368	GARLK	473214
65X1378	GARLK	450621*
65X1379	GARLK	450621
65X1380	GARLK	450621*
65X1384	GARLK	450869*
65X1385	GARLK	450869*
65X1386	GARLK	450869*
65X1399	GARLK	473244
65X14	GARLK	330385!
65X1400	GARLK	473244
65X1401	GARLK	473244
65X1402	GARLK	472018
65X1403	GARLK	472018
65X1404	GARLK	472018*
65X1405	GARLK	473471*
65X1406	GARLK	473471
65X1407	GARLK	473471*
65X1408	GARLK	472020*
65X1409	GARLK	472020*
65X1410	GARLK	472020*
65X1414	GARLK	470354*
65X1415	GARLK	470354
65X1416	GARLK	470354*
65X142	GARLK	471554!
65X1420	GARLK	473245!*
65X1421	GARLK	473245!*
65X1422	GARLK	471504!
65X1423	GARLK	412943*
65X1424	GARLK	412943*
65X1425	GARLK	412943*
65X1426	GARLK	413472
65X1428	GARLK	413472
65X143	GARLK	471567!
65X1432	GARLK	416268
65X1434	GARLK	416268
65X144	GARLK	471567!
65X145	GARLK	471498*
65X146	GARLK	471498
65X147	GARLK	471643!
65X1471	GARLK	471341!
65X1472	GARLK	471341!
65X1473	GARLK	471341!
65X1474	GARLK	471272!
65X1475	GARLK	471272!
65X1476	GARLK	471272!
65X1477	GARLK	473473*
65X1478	GARLK	473473
65X1479	GARLK	473473
65X1480	GARLK	471138!
65X1481	GARLK	471138!
65X1482	GARLK	471138!
65X1486	GARLK	410737!
65X1487	GARLK	410737!
65X1488	GARLK	410737!
65X1492	GARLK	472636!
65X1493	GARLK	472636!
65X1494	GARLK	472636!
65X1495	GARLK	411253!
65X1496	GARLK	411253!
65X1497	GARLK	411253!
65X1498	GARLK	412920!
65X1499	GARLK	412920!
65X15	GARLK	350156
65X15	GARLK	473096
65X150	GARLK	471684!
65X1500	GARLK	412920!
65X1501	GARLK	455136*
65X1502	GARLK	455136*
65X1503	GARLK	455136
65X1504	GARLK	411376!
65X1505	GARLK	411376!
65X1506	GARLK	411376!
65X151	GARLK	450033*
65X152	GARLK	450033
65X153	GARLK	470390*
65X154	GARLK	470390
65X155	GARLK	473407*
65X156	GARLK	473407
65X1561	GARLK	472150*
65X1562	GARLK	472150*
65X1563	GARLK	472150
65X1573	GARLK	411394!
65X1574	GARLK	411394!
65X1575	GARLK	411394!
65X1576	GARLK	410694!*
65X1577	GARLK	410694!*
65X1578	GARLK	410694!*
65X1580	GARLK	450133*
65X1581	GARLK	450133*
65X1585	GARLK	416444*
65X1586	GARLK	416444*
65X1587	GARLK	416444
65X1588	GARLK	455647=
65X1589	GARLK	455647=
65X1590	GARLK	455647=
65X1594	GARLK	455321*
65X1595	GARLK	455321*
65X1596	GARLK	455321
65X16	GARLK	350156
65X16	GARLK	473096
65X1639	GARLK	473474*
65X1640	GARLK	473474*
65X1641	GARLK	473474
65X1642	GARLK	470565!
65X1643	GARLK	470565!
65X1644	GARLK	470565!
65X1648	GARLK	473475*
65X1649	GARLK	473475
65X1650	GARLK	473475*
65X1654	GARLK	413246
65X1655	GARLK	413246
65X1656	GARLK	413246
65X1657	GARLK	412119!
65X1658	GARLK	412119!
65X1659	GARLK	412119!
65X1660	GARLK	413247!
65X1661	GARLK	413247!
65X1662	GARLK	413247!
65X1663	GARLK	410987!
65X1664	GARLK	410987!
65X1665	GARLK	410987!
65X1666	GARLK	416271!*
65X1667	GARLK	416271!*
65X1668	GARLK	416271!*
65X1672	GARLK	410825
65X1673	GARLK	410825
65X1674	GARLK	410825*
65X1675	GARLK	416071*
65X1676	GARLK	416071*
65X1677	GARLK	416071
65X1678	GARLK	417480!
65X1679	GARLK	417480!
65X1680	GARLK	417480!
65X17	GARLK	471103!
65X1723	GARLK	471887*
65X1724	GARLK	471887*
65X1725	GARLK	471887
65X1735	GARLK	412040*
65X1736	GARLK	412040*
65X1737	GARLK	412040
65X1738	GARLK	411500*
65X1739	GARLK	411500*
65X1740	GARLK	411500*
65X1741	GARLK	413478*
65X1742	GARLK	413478*
65X1743	GARLK	413478*
65X1744	GARLK	450104*
65X1745	GARLK	450104*
65X1746	GARLK	450104
65X1747	GARLK	411245!
65X1748	GARLK	411245!
65X1749	GARLK	411245!
65X1750	GARLK	417073*
65X1751	GARLK	417073*
65X1752	GARLK	417073
65X1774	GARLK	50560*
65X18	GARLK	471103!
65X1801	GARLK	472029*
65X1802	GARLK	472029*
65X1803	GARLK	472029*
65X1807	GARLK	471271!
65X1808	GARLK	471271!
65X1809	GARLK	471271!
65X1810	GARLK	410496!
65X1811	GARLK	410496!
65X1812	GARLK	410496!
65X1813	GARLK	470605!*
65X1815	GARLK	470605!*
65X1819	GARLK	415449!
65X1820	GARLK	415449!
65X1821	GARLK	415449!
65X1822	GARLK	415001!
65X1823	GARLK	415001!
65X1824	GARLK	415001!
65X1825	GARLK	416273!
65X1826	GARLK	416273!
65X1827	GARLK	416273!
65X1828	GARLK	455079!*
65X1829	GARLK	455079!*
65X1830	GARLK	455079!
65X1831	GARLK	415082
65X1832	GARLK	415082*
65X1833	GARLK	415082*
65X1834	GARLK	455655!*
65X1835	GARLK	455655!*
65X1836	GARLK	455655!*
65X1927	GARLK	412871!
65X1930	GARLK	412871!
65X1931	GARLK	412871!
65X1932	GARLK	412871!
65X1933	GARLK	413248
65X1934	GARLK	413248
65X1935	GARLK	413248
65X1936	GARLK	450412*
65X1937	GARLK	450412*
65X1938	GARLK	450412
65X1939	GARLK	415483!
65X1940	GARLK	415483!
65X1941	GARLK	415483!
65X1945	GARLK	415458!
65X1946	GARLK	415458!
65X1947	GARLK	415458!
65X1948	GARLK	417343!*
65X1949	GARLK	417343!*
65X195	GARLK	473414*
65X1950	GARLK	417343!
65X1951	GARLK	415007*
65X1952	GARLK	415007*
65X1953	GARLK	415007*
65X1954	GARLK	417082*
65X1955	GARLK	417082*
65X1956	GARLK	417082*
65X196	GARLK	473414*
65X199	GARLK	473414*
65X1993	GARLK	455434*
65X1994	GARLK	455434*
65X1995	GARLK	455434
65X200	GARLK	473414*
65X2002	GARLK	455151
65X2003	GARLK	455151*
65X2004	GARLK	455151
65X2005	GARLK	455008*
65X2006	GARLK	455008*
65X2007	GARLK	455008*
65X203	GARLK	473415*
65X2032	GARLK	480491*
65X2033	GARLK	480491*
65X2034	GARLK	480491
65X2035	GARLK	416664!
65X2036	GARLK	416664!
65X2037	GARLK	416664!
65X2038	GARLK	417484!
65X2039	GARLK	417484!
65X204	GARLK	473415
65X2040	GARLK	417484!
65X2041	GARLK	415984!*
65X2042	GARLK	415984!*

! Industrial Size/Type * Minor Width Difference

= The U.S. customer service number is 877-4-TIMKEN. The Canadian customer service numbers are 800-565-4927 (English) and 800-565-0438 (French-Canadian).

Mfr. No.	Name	Zero Duplication or Recommended Industrial
65X2043	GARLK	415984 ! *
65X2044	GARLK	417316 !
65X2045	GARLK	417316 !
65X2046	GARLK	417316 !
65X2047	GARLK	415960
65X2048	GARLK	415960
65X2049	GARLK	415960
65X2050	GARLK	416706 !
65X2051	GARLK	416706 !
65X2052	GARLK	416706 !
65X2115	GARLK	415303 ! *
65X2117	GARLK	415303 ! *
65X2118	GARLK	417344 !
65X2119	GARLK	417344 !
65X2120	GARLK	417344 !
65X2121	GARLK	417158 !
65X2122	GARLK	417158 !
65X2123	GARLK	417158 !
65X2124	GARLK	416921 !
65X2125	GARLK	416921 !
65X2126	GARLK	416921 !
65X213	GARLK	471267 !
65X214	GARLK	450398
65X214	GARLK	471267 !
65X2146	GARLK	416956 *
65X2147	GARLK	416956 *
65X2148	GARLK	416956
65X2149	GARLK	417159 *
65X215	GARLK	471570 !
65X2150	GARLK	417159 *
65X2151	GARLK	417159 *
65X2152	GARLK	416654 !
65X2153	GARLK	416654 !
65X2154	GARLK	416654 !
65X2155	GARLK	417486 *
65X2156	GARLK	417486 *
65X216	GARLK	471570 ! *
65X2168	GARLK	417349 *
65X2169	GARLK	417349 *
65X217	GARLK	471633 ! *
65X2170	GARLK	417349 *
65X2171	GARLK	417350 !
65X2172	GARLK	417350 !
65X2173	GARLK	417350 !
65X2174	GARLK	415995 !
65X2175	GARLK	415995 !
65X2176	GARLK	415995 !
65X2177	GARLK	417351 !
65X2178	GARLK	417351 !
65X218	GARLK	471633 !
65X2180	GARLK	417487 !
65X2180	GARLK	417487
65X2182	GARLK	417487
65X2183	GARLK	417488 !
65X219	GARLK	471646 !
65X220	GARLK	471646 !
65X221	GARLK	470590 *
65X222	GARLK	470590
65X2225	GARLK	417621 !
65X2226	GARLK	417621 !
65X2228	GARLK	416288 !
65X223	GARLK	471137 *
65X2231	GARLK	417171 !
65X2234	GARLK	417172 *
65X2236	GARLK	417172 *
65X2237	GARLK	416297 *
65X224	GARLK	471137
65X2246	GARLK	415021
65X2249	GARLK	456105 *
65X225	GARLK	471730 *
65X2252	GARLK	417490 *
65X2254	GARLK	417490
65X2255	GARLK	455336 *
65X2257	GARLK	455336 *
65X226	GARLK	471730
65X2260	GARLK	6358
65X2261	GARLK	417490
65X2267	GARLK	455022 *
65X2270	GARLK	476470
65X2271	GARLK	476470
65X2272	GARLK	476470
65X2273	GARLK	417181 !
65X2276	GARLK	418028
65X2276	GARLK	455137 !
65X2278	GARLK	418028
65X2278	GARLK	455137 !
65X2279	GARLK	417353 !
65X2282	GARLK	456305
65X2284	GARLK	456305
65X2288	GARLK	415023
65X229	GARLK	470645 *
65X2294	GARLK	455328 *
65X230	GARLK	470645
65X2300	GARLK	415085 !
65X2300	GARLK	456648
65X2312	GARLK	455024
65X2321	GARLK	412473 !
65X2323	GARLK	412473 !
65X2324	GARLK	417191
65X2324	GARLK	455165 !
65X2325	GARLK	417191
65X2325	GARLK	455165 !
65X2326	GARLK	417191
65X2326	GARLK	455165 !
65X2327	GARLK	417354 ! *
65X2329	GARLK	417354 !
65X2330	GARLK	416321
65X2336	GARLK	415025 *
65X2342	GARLK	416327
65X2345	GARLK	417492 *
65X2348	GARLK	417493 *
65X2354	GARLK	417494 *
65X2356	GARLK	417494
65X2357	GARLK	455026 *
65X2363	GARLK	455471 *
65X2365	GARLK	455471 *
65X2366	GARLK	415991
65X2366	GARLK	455146 !
65X2367	GARLK	415991
65X2367	GARLK	455146 !
65X2368	GARLK	415991
65X2368	GARLK	455146 !
65X2369	GARLK	417196 ! *
65X2371	GARLK	417196 !
65X2372	GARLK	415437
65X2374	GARLK	415437 !
65X2374	GARLK	415437
65X2375	GARLK	415437 !
65X2375	GARLK	415437
65X2378	GARLK	415027
65X2380	GARLK	415027
65X2381	GARLK	417495 *
65X2384	GARLK	415559 *
65X2386	GARLK	415559
65X2390	GARLK	417496 *
65X2392	GARLK	417496 *
65X2393	GARLK	415711 *
65X2396	GARLK	417497 *
65X2399	GARLK	417498 *
65X2402	GARLK	55028 *
65X2417	GARLK	416332 !
65X2419	GARLK	416332 !
65X2420	GARLK	415937 !
65X2423	GARLK	417355 !
65X2426	GARLK	416125 !
65X2432	GARLK	417499
65X2435	GARLK	415832
65X2441	GARLK	417501 *
65X2447	GARLK	55030 *
65X2450	GARLK	55646 =
65X2453	GARLK	416670 *
65X2459	GARLK	417502 *
65X2462	GARLK	415379
65X2462	GARLK	415379 !
65X2464	GARLK	415379
65X2464	GARLK	415379 !
65X2465	GARLK	417205 !
65X2468	GARLK	416339
65X2470	GARLK	416339 *
65X2474	GARLK	415150 ! *
65X2476	GARLK	415150 ! *
65X2477	GARLK	416127
65X2480	GARLK	417503 *
65X2501	GARLK	417211 !
65X2504	GARLK	416345 !
65X2507	GARLK	415697 !
65X2507	GARLK	455547
65X251	GARLK	471571
65X2510	GARLK	417366 ! *
65X2513	GARLK	415958
65X2513	GARLK	415958 !
65X2516	GARLK	417505
65X2519	GARLK	476470 !
65X2519	GARLK	476470
65X252	GARLK	471571 *
65X2521	GARLK	476470 !
65X2521	GARLK	476470
65X2525	GARLK	455191 *
65X2527	GARLK	455191 *
65X2528	GARLK	415263
65X2531	GARLK	417506 *
65X2537	GARLK	415035
65X2539	GARLK	415035
65X2540	GARLK	417356 !
65X2540	GARLK	455188
65X2541	GARLK	417356 !
65X2541	GARLK	455188
65X2543	GARLK	417357
65X2543	GARLK	455192 !
65X2544	GARLK	417357
65X2544	GARLK	455192 !
65X2546	GARLK	416130 !
65X2549	GARLK	415036 *
65X255	GARLK	471647 *
65X2550	GARLK	415036
65X2552	GARLK	417507
65X2552	GARLK	417507 !
65X2555	GARLK	415041 *
65X2556	GARLK	415041
65X256	GARLK	471647 *
65X2561	GARLK	417509 *
65X2567	GARLK	417223 *
65X2568	GARLK	417223
65X2569	GARLK	417223 *
65X2573	GARLK	55193 * =
65X2579	GARLK	455037 *
65X2600	GARLK	417511 *
65X2603	GARLK	415142 *
65X2605	GARLK	415142 *
65X2609	GARLK	417512 *
65X2610	GARLK	417512
65X2615	GARLK	415043 *
65X2621	GARLK	455203 *
65X2627	GARLK	455056 *
65X2630	GARLK	455194 *
65X2636	GARLK	417513 *
65X2642	GARLK	417514 *
65X2648	GARLK	417515 *
65X2654	GARLK	417516 *
65X2657	GARLK	472157
65X2657	GARLK	472157 !
65X2659	GARLK	416556 !
65X2659	GARLK	472157
65X2660	GARLK	415196 !
65X2663	GARLK	416891 !
65X2664	GARLK	416891 !
65X2666	GARLK	416135 !
65X2669	GARLK	415045 ! *
65X2671	GARLK	415045 ! *
65X2675	GARLK	416137 *
65X2678	GARLK	417518 *
65X2681	GARLK	415058 *
65X2684	GARLK	456141
65X2687	GARLK	455197N *
65X2699	GARLK	416144
65X2705	GARLK	417238
65X2711	GARLK	415196 ! *
65X2712	GARLK	415196 !
65X2717	GARLK	415047 *
65X2723	GARLK	416149 *
65X2729	GARLK	415060 *
65X2729	GARLK	455060 *
65X2732	GARLK	55199 * =
65X2733	GARLK	55199 =
65X2738	GARLK	417525 *
65X2740	GARLK	417525 *
65X2744	GARLK	417526 *
65X2750	GARLK	415351 ! *
65X2753	GARLK	416888 !
65X2754	GARLK	416888 !
65X2755	GARLK	416888 !
65X2756	GARLK	416153 !
65X2759	GARLK	416892 !
65X2760	GARLK	416892 !
65X2761	GARLK	416892 !
65X2762	GARLK	417531 *
65X2765	GARLK	416154 ! *
65X2766	GARLK	416154 ! *
65X2767	GARLK	416154 !
65X2768	GARLK	416070 *
65X2771	GARLK	415351 !
65X2774	GARLK	417532 *
65X2780	GARLK	417533 *
65X2786	GARLK	417534 *
65X2792	GARLK	457585 *
65X2801	GARLK	415371
65X2804	GARLK	455685 *
65X2807	GARLK	416158 *
65X2809	GARLK	416158
65X2813	GARLK	415064 *
65X2837	GARLK	415138 ! *
65X2838	GARLK	415138 !
65X2839	GARLK	415138 !
65X2840	GARLK	417538 *
65X2843	GARLK	417247 !
65X2845	GARLK	417247 !
65X2846	GARLK	417252 *
65X2849	GARLK	415066 *
65X2873	GARLK	416167 !
65X2875	GARLK	416167 !
65X2876	GARLK	417267 *
65X2879	GARLK	417269 !
65X2881	GARLK	417269 !
65X2894	GARLK	417539 ! *
65X2900	GARLK	417273 *
65X2901	GARLK	417273
65X2903	GARLK	417540 *
65X2915	GARLK	415725 !

! Industrial Size/Type * Minor Width Difference

= The U.S. customer service number is 877-4-TIMKEN. The Canadian customer service numbers are 800-565-4927 (English) and 800-565-0438 (French-Canadian).

Mfr. No.	Name	Zero Duplication or Recommended Industrial
65X2917	GARLK	415725!
65X2918	GARLK	417584*
65X2921	GARLK	416865!
65X2922	GARLK	416865!
65X2923	GARLK	416865!
65X2924	GARLK	417278
65X2926	GARLK	417278
65X2927	GARLK	417541
65X2929	GARLK	417541
65X2933	GARLK	417542*
65X2936	GARLK	417543*
65X2951	GARLK	417545*
65X2993	GARLK	417258*
65X2996	GARLK	417546!*
65X2998	GARLK	417546!
65X2999	GARLK	417547*
65X3001	GARLK	417547
65X3032	GARLK	417548*
65X3059	GARLK	417262!
65X3065	GARLK	415645!
65X3065	GARLK	455104
65X3067	GARLK	415645!
65X3067	GARLK	455104
65X3071	GARLK	417549!*
65X3122	GARLK	417551*
65X3125	GARLK	455576!
65X3128	GARLK	415938*
65X3130	GARLK	415938
65X3131	GARLK	417554!*
65X3176	GARLK	417254*
65X3179	GARLK	417360
65X3182	GARLK	416107!
65X3184	GARLK	416107!
65X3184	GARLK	455073
65X3185	GARLK	417361
65X323	GARLK	471651
65X324	GARLK	471651*
65X325	GARLK	471705!
65X326	GARLK	471705!
65X327	GARLK	473419
65X3275	GARLK	417362!*
65X3278	GARLK	417363
65X328	GARLK	473419
65X3281	GARLK	416666*
65X3283	GARLK	416666
65X3284	GARLK	417364
65X329	GARLK	471735*
65X3293	GARLK	416039
65X330	GARLK	471735
65X331	GARLK	450342
65X332	GARLK	450342
65X333	GARLK	471762!
65X334	GARLK	471762!
65X3347	GARLK	417780*
65X335	GARLK	473420*
65X336	GARLK	473420
65X3375	GARLK	455330!*
65X3377	GARLK	455330!
65X3384	GARLK	415074
65X3394	GARLK	455480!*
65X3396	GARLK	455480!*
65X3398	GARLK	55316*=
65X3402	GARLK	417562*
65X3405	GARLK	417562*
65X3406	GARLK	55692*=
65X3417	GARLK	55242*
65X3421	GARLK	417563*
65X3423	GARLK	417563
65X3424	GARLK	417563
65X3426	GARLK	415294!
65X3434	GARLK	416229*
65X3435	GARLK	416229
65X3444	GARLK	417298*
65X3445	GARLK	417298
65X3460	GARLK	415327*
65X3464	GARLK	417596*
65X3474	GARLK	455948
65X3482	GARLK	455584*
65X3483	GARLK	455584
65X3492	GARLK	416364!
65X3496	GARLK	417597*
65X35	GARLK	472810!
65X3501	GARLK	416239!
65X3504	GARLK	417564*
65X351	GARLK	471652
65X3518	GARLK	416044
65X352	GARLK	471652
65X3526	GARLK	415116*
65X3527	GARLK	415116
65X353	GARLK	471692!
65X354	GARLK	471692!
65X355	GARLK	476838!
65X356	GARLK	476838!
65X357	GARLK	470712!
65X358	GARLK	470712!
65X359	GARLK	471763*
65X36	GARLK	472810!
65X360	GARLK	471763
65X361	GARLK	471785!
65X362	GARLK	471785!
65X363	GARLK	471736
65X364	GARLK	471736
65X365	GARLK	473428*
65X366	GARLK	473428
65X367	GARLK	471764!
65X368	GARLK	471764!
65X369	GARLK	473427*
65X370	GARLK	473427
65X374	GARLK	450362*
65X376	GARLK	450362*
65X377	GARLK	450600=
65X378	GARLK	450600=
65X379	GARLK	450600=
65X383	GARLK	472475*
65X384	GARLK	472475
65X385	GARLK	473426
65X386	GARLK	473426
65X3863	GARLK	350435
65X387	GARLK	471765!
65X3872	GARLK	471747!
65X3873	GARLK	471747!
65X3876	GARLK	473425
65X388	GARLK	471765!
65X3880	GARLK	471344*
65X3883	GARLK	473442!*
65X3885	GARLK	470088*
65X389	GARLK	471354!*
65X390	GARLK	471354!
65X3904	GARLK	472234*
65X3905	GARLK	472234*
65X3906	GARLK	472234
65X394	GARLK	473205
65X395	GARLK	473205
65X396	GARLK	473205
65X397	GARLK	474255
65X398	GARLK	474255
65X399	GARLK	474255
65X424	GARLK	471750!
65X425	GARLK	471750!
65X426	GARLK	471750!
65X427	GARLK	471766!
65X428	GARLK	471766!
65X43	GARLK	320457
65X430	GARLK	471787!
65X431	GARLK	471787!
65X433	GARLK	450177*
65X434	GARLK	450177*
65X435	GARLK	450177*
65X436	GARLK	471795
65X437	GARLK	471795
65X438	GARLK	471795
65X439	GARLK	450165
65X439	GARLK	471801!
65X44	GARLK	320457
65X440	GARLK	450165
65X440	GARLK	471801!
65X441	GARLK	450165
65X441	GARLK	471801!
65X442	GARLK	471808!*
65X443	GARLK	471808!*
65X444	GARLK	471808!
65X445	GARLK	471818*
65X446	GARLK	471818*
65X447	GARLK	471818*
65X448	GARLK	470050*
65X449	GARLK	470050
65X45	GARLK	470004!
65X450	GARLK	470050*
65X451	GARLK	473424!*
65X452	GARLK	473424!
65X4584	GARLK	473197
65X46	GARLK	470004!
65X4677	GARLK	472560N!
65X49	GARLK	471442!
65X50	GARLK	471442!
65X51	GARLK	471526!
65X53	GARLK	471472!
65X535	GARLK	470774!
65X536	GARLK	470774!
65X537	GARLK	470774!
65X538	GARLK	472287!*
65X539	GARLK	472287!*
65X54	GARLK	471472!
65X540	GARLK	472287!*
65X541	GARLK	471192
65X542	GARLK	471192
65X543	GARLK	471192
65X544	GARLK	473214
65X545	GARLK	473214
65X546	GARLK	473214
65X547	GARLK	473215!*
65X548	GARLK	473215!*
65X549	GARLK	473215!
65X55	GARLK	471549!
65X550	GARLK	470950!
65X550	GARLK	6241S
65X551	GARLK	470950!
65X551	GARLK	6241S
65X552	GARLK	470950!
65X552	GARLK	6241S
65X556	GARLK	471835!
65X557	GARLK	471835!
65X558	GARLK	471835!
65X559	GARLK	472843*
65X56	GARLK	471549!
65X560	GARLK	472843*
65X561	GARLK	472843
65X592	GARLK	473224!*
65X593	GARLK	473224!
65X594	GARLK	473224!*
65X595	GARLK	473016!*
65X596	GARLK	473016!*
65X597	GARLK	473016!
65X598	GARLK	473225!*
65X599	GARLK	473225!*
65X600	GARLK	473225!
65X601	GARLK	474264
65X602	GARLK	474264
65X603	GARLK	474264
65X607	GARLK	473226*
65X608	GARLK	473226*
65X609	GARLK	473226
65X628	GARLK	473419!
65X643	GARLK	470625!
65X644	GARLK	470625!
65X645	GARLK	470625!
65X646	GARLK	470059
65X646	GARLK	470380!
65X647	GARLK	470059
65X647	GARLK	470380!
65X648	GARLK	470059
65X648	GARLK	470380!
65X649	GARLK	471820*
65X650	GARLK	471820*
65X651	GARLK	471820*
65X655	GARLK	473228
65X656	GARLK	473228
65X657	GARLK	473228
65X658	GARLK	451857*
65X659	GARLK	451857*
65X660	GARLK	451857
65X661	GARLK	470487!
65X663	GARLK	470487!
65X664	GARLK	473440!*
65X665	GARLK	473440!*
65X666	GARLK	473440!
65X67	GARLK	471281!
65X68	GARLK	471281!
65X69	GARLK	471535!*
65X70	GARLK	471535!
65X700	GARLK	472213
65X701	GARLK	472213
65X702	GARLK	472213
65X703	GARLK	472299*
65X704	GARLK	472299*
65X705	GARLK	472299
65X706	GARLK	471821!
65X707	GARLK	471821!
65X708	GARLK	471821!
65X71	GARLK	471551!
65X712	GARLK	473229
65X713	GARLK	473229
65X714	GARLK	473229
65X715	GARLK	470682*
65X716	GARLK	470682*
65X717	GARLK	470682
65X718	GARLK	471316
65X72	GARLK	471551!
65X720	GARLK	471316
65X721	GARLK	473441*
65X722	GARLK	473441*
65X723	GARLK	473441
65X724	GARLK	450273
65X725	GARLK	450273
65X726	GARLK	450273
65X732	GARLK	451817
65X733	GARLK	450065*
65X734	GARLK	450065*
65X735	GARLK	450065*
65X739	GARLK	482253*
65X740	GARLK	482253*
65X741	GARLK	482253
65X742	GARLK	451469*
65X743	GARLK	451469*
65X744	GARLK	451469
65X751	GARLK	450274
65X753	GARLK	450274
65X760	GARLK	473231

! Industrial Size/Type * Minor Width Difference

= The U.S. customer service number is 877-4-TIMKEN. The Canadian customer service numbers are 800-565-4927 (English) and 800-565-0438 (French-Canadian).

Mfr. No.	Name	Zero Duplication or Recommended Industrial
65X761	GARLK	473231
65X762	GARLK	473231
65X763	GARLK	473367!
65X763	GARLK	473367
65X764	GARLK	473367
65X764	GARLK	473367!
65X765	GARLK	473367
65X765	GARLK	473367!
65X769	GARLK	473010
65X77	GARLK	471532*
65X770	GARLK	473010
65X771	GARLK	473010
65X772	GARLK	473232
65X773	GARLK	473232
65X774	GARLK	473232
65X775	GARLK	481864
65X776	GARLK	481864
65X777	GARLK	481864
65X778	GARLK	474274
65X779	GARLK	474274
65X78	GARLK	471532
65X780	GARLK	474274
65X781	GARLK	450275
65X782	GARLK	450275
65X783	GARLK	450275
65X787	GARLK	473444
65X788	GARLK	473444
65X789	GARLK	473444
65X79	GARLK	473405*
65X7953	GARLK	415577*
65X7973	GARLK	55329*=
65X80	GARLK	473405
65X80X8	FORSH	65X80X8
65X80X8	SIMRT	65X80X8
65X80X8SC	TRSCM	65X80X8
65X80X8TC	TRSCM	65X80X8
65X81	GARLK	471558
65X82	GARLK	471558*
65X829	GARLK	473445*
65X830	GARLK	473445
65X831	GARLK	473445*
65X835	GARLK	473234
65X836	GARLK	473234
65X837	GARLK	473234
65X838	GARLK	473235!*
65X839	GARLK	473235!*
65X840	GARLK	473235!
65X841	GARLK	474265
65X842	GARLK	474265
65X843	GARLK	474265
65X844	GARLK	473236!*
65X845	GARLK	473236!*
65X846	GARLK	473236!
65X853	GARLK	473446
65X854	GARLK	473446
65X855	GARLK	473446*
65X859	GARLK	471981
65X85X10SC	TRSCM	65X85X10
65X85X10TC	TRSCM	65X85X10
65X85X8AN	ISP	65X85X8
65X860	GARLK	471981
65X861	GARLK	471981
65X87	GARLK	471466!
65X88	GARLK	471466!
65X88X10SC	TRSCM	65X88X10
65X88X10TC	TRSCM	65X88X10
65X88X8AN	ISP	65X88X8
65X898	GARLK	471504!
65X899	GARLK	471504!
65X900	GARLK	471504!
65X904	GARLK	472164!
65X905	GARLK	472164*
65X906	GARLK	472164!
65X907	GARLK	472185!
65X908	GARLK	472185!
65X909	GARLK	472185!
65X90X10SC	TRSCM	65X90X10!
65X90X10TC	TRSCM	65X90X10!
65X90X13SC	TRSCM	65X90X13
65X90X13TC	TRSCM	65X90X13
65X91	GARLK	471255!
65X910	GARLK	470334!
65X911	GARLK	470334!
65X912	GARLK	470334!
65X913	GARLK	472179
65X914	GARLK	472179
65X915	GARLK	472179
65X916	GARLK	473447
65X917	GARLK	473447*
65X918	GARLK	473447
65X919	GARLK	470334!
65X919	GARLK	50289
65X92	GARLK	471255!
65X920	GARLK	470334!
65X920	GARLK	50289
65X921	GARLK	470334!
65X921	GARLK	50289
65X922	GARLK	471141!
65X923	GARLK	471141!
65X924	GARLK	471141!
65X925	GARLK	473448
65X926	GARLK	473448
65X927	GARLK	473448
65X928	GARLK	471984*
65X929	GARLK	471984*
65X93	GARLK	471564
65X930	GARLK	471984
65X931	GARLK	473313
65X932	GARLK	473313
65X933	GARLK	473313
65X94	GARLK	471564*
65X940	GARLK	50266*
65X941	GARLK	50266*
65X942	GARLK	50266
65X943	GARLK	450269*
65X944	GARLK	450269*
65X945	GARLK	450269
65X946	GARLK	450285*
65X947	GARLK	450285*
65X948	GARLK	450285
65X949	GARLK	471866!*
65X95	GARLK	471612
65X950	GARLK	471866!*
65X951	GARLK	471866!
65X95X10AN	ISP	65X95X7
65X97	GARLK	481528
65X9722	GARLK	470625!
65X976	GARLK	472070*
65X977	GARLK	472070*
65X978	GARLK	472070
65X979	GARLK	471866!
65X98	GARLK	481528
65X980	GARLK	471866!
65X981	GARLK	471866!
65X982	GARLK	473449
65X983	GARLK	473449
65X984	GARLK	473449
65X987	GARLK	480281!
65X988	GARLK	450269*
65X989	GARLK	450269*
65X990	GARLK	450269*
65X991	GARLK	473450
65X992	GARLK	473450
65X993	GARLK	473450
660	GARLK	451857
660097	EATON	415327
660009700	EATON	415327
6600140	EATON	415551
660014000	EATON	415551
6600282	EATON	8907
660028200	EATON	8907
6600580	EATON	415035
6600692	EATON	416362
6600692-00	EATON	416362
660079E	SPG	712135
6600S	SPG	6597S
6601000	LF-PT	471688
6602556	EATON	417283
660389	CLARK	472179
66038R91	IH	471224
660469R91	IH	472439
660496	CLARK	471766
6605	ALOY	2689S
66051	VIC	471442!
66054	CATER	473467!
6606	ALOY	8871
6609	C-R	17X27X7
6610	C-R	17X28X7!
6610	C-R	221710
66101	VIC	471255!
661021	HU-WR	472924!
6611	C-R	17X28X7V!
6611	C-R	221710
661185R91	IH	474256
6612	C-R	17X28X7V
66121	TROS	6815
66122S	TROS	9150S
66123	GRAY	450084!
66123	TROS	472258!
66124	GRAY	411253!
66126	GRAY	471137
66126	VIC	470954!
66126K4	GE	470954!
6613	ALOY	9049
66135	VIC	471554!
661350R91	IH	471341!
6614	C-R	17X28X7!
6614	C-R	221710
66140	VIC	471643!
6615	C-R	17X29X7
661504	CLARK	417621!
661875R91	IH	204002
661876R91	IH	204002
66193	VIC	471267!
66196	VIC	471570!
662	C-R	5MR1008
6620	ALOY	1209
6620	C-R	17X30X7!
6620	C-R	221720
66201S	TROS	9116S
662027	CLARK	412871!
66202S	TROS	9195S=
66203	TROS	9049
66203	TROS	9049N
662066R91	IH	415303!
6622	ALOY	8871
6622	C-R	221720
6622	C-R	481481
66220	TROS	9161
662316L	C-R	6245S=
6624	C-R	17X30X7!
6624	C-R	221720
66240	C-R	417298
66241	C-R	417298
66242	VIC	472311!
66245	VIC	471224!
66247	VIC	471649!
66249	DGASK	13069
6625	C-R	17X30X7V
662535	ALLCH	471272!
662548	GMC	470565=
662573C1	IH	JV1550=
6626	C-R	17X30X7V
662654	CLARK	417316!
66280	C-R	417298
662902	CLARK	415449!
662D316-L	C-R	6245S=
663	C-R	5MR1009
6630	C-R	17X32X7!
6630	C-R	221730
663004R91	IH	204013
663041R91	IH	474256
663042R91	IH	471341!
663043R91	IH	415697!
663043R91	IH	455547
663044R91	IH	414045!
663045R91	IH	472439
66308	DGASK	13338
66318	VIC	476838!
6633	C-R	17X32X7!
6633	C-R	221730
663325	US-EL	472341!
663379	VIC	370006A
663379	WHITE	370006A
663379D6	DIA	370006A
6633R	JN-MN	417603!
66340S	TROS	9342S
663414	C-R	55501=
663424	C-R	455375=
663476	GMC	370012A
663477	GMC	418028
663478	GMC	370005A
663480	GMC	370021A
663482	GMC	370007A
663484	GMC	417134
663485	GMC	370005A
663486	GMC	370021A
663487	GMC	417505
663512	B-L-H	415938
663512	C-R	415938
663512	MINMA	415938
663512A	BUC-E	415938
663512M1	C-R	415938
663520	C-R	417555!
663520M1	C-R	417555!
663524	C-R	415447
663528	C-R	55392=
663566R91	IH	473215!
663567R91	IH	415379!
663567R91	IH	415379
663568R91	IH	415379!
663568R91	IH	415379
6635SS	JN-MN	470712!
663603	CHRYS	450084!
663729R91	IH	204017
6637S	SPG	3103!
66381D	IH	471554!
663885R91	IH	472572!
663886R91	IH	473214
6638S	NATL	370001A
663H512-T8	C-R	415938
663N2	WHITE	471141!
663W524	C-R	415447
6640	C-R	17X35X7!
6640	C-R	221735
66402S	TROS	2043
664078R91	IH	473214
6641	C-R	221735

! Industrial Size/Type * Minor Width Difference

= The U.S. customer service number is 877-4-TIMKEN. The Canadian customer service numbers are 800-565-4927 (English) and 800-565-0438 (French-Canadian).

Mfr. No.	Name	Zero Duplication or Recommended Industrial
664157R91	*IH*	**415303**!
6641S	*SPG*	**471570**!
6642	*C-R*	17X35X7V
664309R91	*IH*	204013
6644	*C-R*	17X35X7
66440C1	*IH*	**471442**!
664412	*ALLCH*	471507N=
66446	*VIC*	**323138**!
6645	*C-R*	17X36X7
6646	*C-R*	17X35X7V
66462	*VIC*	**471276**
664631	*SPICE*	**480210**!
664657R91	*IH*	**472164**!
664658R91	*IH*	**472164**!
6647S	*NATL*	**470954**!
6650	*C-R*	17X37X7
66500	*VIC*	1012
66500	*VIC*	1012N
66501	*VIC*	224045
66501	*VIC*	40X62X12!
66502	*VIC*	1174
66503	*VIC*	1165
66504	*VIC*	1208
66504	*VIC*	48X72X7!
66505	*VIC*	1967
66506	*VIC*	1165
66507	*VIC*	1969
66507	*VIC*	224831
66507	*VIC*	48X63X9!
66508	*VIC*	1208
66508	*VIC*	48X72X7!
66509	*VIC*	1209
66509	*VIC*	225010
66509	*VIC*	50X65X8!
66510	*VIC*	1217
66511	*VIC*	1195
66512	*VIC*	223840
66512	*VIC*	38X58X8!
66513	*VIC*	223840
66513	*VIC*	38X58X8!
66514	*VIC*	224560*
66514	*VIC*	320564*
66514	*VIC*	45X68X7!*
66514	*VIC*	710345
66515	*VIC*	222510
66515	*VIC*	25X35X7!
66516	*VIC*	224015
66517	*VIC*	224820
66517	*VIC*	48X62X8!
66519	*VIC*	55X82X12!
66520	*TROS*	**473473**
66520	*VIC*	1950
66521	*VIC*	224820
66521	*VIC*	48X62X8!
66522	*VIC*	224210
66522	*VIC*	42X55X8!
66523	*VIC*	1955
66523	*VIC*	52X65X9!
66524	*VIC*	1960
66525	*VIC*	1959
66526	*VIC*	224820
66526	*VIC*	48X62X8!
66527	*VIC*	1956
66527	*VIC*	224820*
66527	*VIC*	48X62X8!
66528	*VIC*	58X72X8
66529	*VIC*	1174
66529	*VIC*	38X52X8.5!
6653	*C-R*	17X37X7
66530	*VIC*	1174
66530	*VIC*	38X52X8.5!
66531	*VIC*	1187
66531	*VIC*	47X68X10!
66532	*VIC*	1994
66532	*VIC*	48X70X9!
665335R91	*IH*	**470334**!
66535	*VIC*	223830
66535	*VIC*	38X55X7!
665353R91	*IH*	**470334**!
665355R91	*IH*	**470334**!
66536	*VIC*	1977
66536	*VIC*	224820
66536	*VIC*	48X62X8!
66537	*VIC*	1183
66537	*VIC*	42X55X8!
66538	*VIC*	1973
66538	*VIC*	1977
66539	*VIC*	1174
66539	*VIC*	38X52X8.5!
66540	*VIC*	1188
66540	*VIC*	224820*
66540	*VIC*	48X62X8!
66540	*VIC*	710322
66540S	*TROS*	8935S
66541	*VIC*	1973
66541	*VIC*	48X65X10!
66541S	*TROS*	**473234**!
66542	*VIC*	1128
66543	*VIC*	224235
66543	*VIC*	42X58X7!
66544	*VIC*	224045
66544	*VIC*	40X62X12!
66545	*VIC*	1181
66545	*VIC*	41X56X7!
66546	*VIC*	224270
66546	*VIC*	42X72X10!
66547	*VIC*	1974
66548	*VIC*	32X47X7!
66548	*VIC*	3476
66549	*VIC*	1962
66549F	*DIA*	**410102**
6655	*C-R*	17X38X7
66550	*VIC*	1873
66551	*VIC*	**471192**
66552	*VIC*	224820
66553	*VIC*	224820
66553	*VIC*	48X62X8!
66554	*VIC*	**472164**!
66555	*VIC*	**473241**
66556	*VIC*	**473234**!
66557	*VIC*	1110
66558	*VIC*	1110
66559	*VIC*	**473454***
66559	*VIC*	**473454**!
66561	*VIC*	**471224**!
66562	*VIC*	223510
66563	*VIC*	**471870**!
66564	*VIC*	**350936**
66565	*VIC*	224045
66565	*VIC*	40X62X12!
66566	*VIC*	482126
66568	*VIC*	40769S
66569	*VIC*	**473238**!
665691	*GMC*	370001A
665692	*GMC*	HU066A
66570	*VIC*	223535
66571	*VIC*	**472213**
66572	*VIC*	1174
66572	*VIC*	38X52X8.5!
66573	*VIC*	1077=
66573	*VIC*	223535
66574	*VIC*	2000
66574	*VIC*	224235
66574	*VIC*	42X58X7!
66575	*VIC*	223014
66576	*VIC*	1981
66578	*VIC*	1952
66579	*VIC*	1953
66579	*VIC*	42X60X7!
6657S	*SPG*	7014S
66580	*VIC*	1990
66580	*VIC*	TCS45718
66581	*VIC*	1963
66584	*VIC*	1943
66585	*VIC*	42X55X8!
66587	*VIC*	228030
66587	*VIC*	80X110X10!
66587	*VIC*	80X110X12!*
66588	*VIC*	1012
66588	*VIC*	1012N
66588	*VIC*	45X62X8!
66589RS	*VIC*	88179
66590RS	*VIC*	16204
66590RS	*VIC*	88199
66590RS	*VIC*	99199!
66591RS	*VIC*	99193
66592RS	*VIC*	16201
66592RS	*VIC*	88218
66592RS	*VIC*	99218!
66593RS	*VIC*	16200
66593RS	*VIC*	99225
66594RS	*VIC*	16208
66594RS	*VIC*	99174
66595RS	*VIC*	88187
66595RS	*VIC*	99187!
66596RS	*VIC*	88187
66596RS	*VIC*	99187!
66597RS	*VIC*	16202
66597RS	*VIC*	88176
66597RS	*VIC*	99176!
66598RS	*VIC*	16205
66598RS	*VIC*	88233
66598RS	*VIC*	99233!
66599RS	*VIC*	99212
6659R	*JN-MN*	**471820**
6660	*C-R*	17X40X7
66600RS	*VIC*	88199
66601RS	*VIC*	16203
66601RS	*VIC*	88186
66602RS	*VIC*	99162
66604RS	*VIC*	99149
66605RS	*VIC*	99250
66606RS	*VIC*	99274
66609	*VIC*	10X22X7
6661	*C-R*	17X40X7!
66613	*VIC*	12X30X7
66614	*VIC*	15X26X7
66615	*VIC*	15X30X7!
66615	*VIC*	221540
66616	*VIC*	15X35X7
66618	*VIC*	18X30X7!
66618	*VIC*	221820
66619	*VIC*	18X35X7
6662	*C-R*	17X40X7!
66620	*VIC*	20X35X7!
66620	*VIC*	222030
66621	*VIC*	20X40X7!
66621	*VIC*	222050
66622	*VIC*	222220
66622	*VIC*	22X35X7!
66623	*VIC*	22X40X7
66623	*VIC*	TCS45434
66624	*VIC*	222540
66624	*VIC*	25X40X7!
66625	*VIC*	25X47X7
66626	*VIC*	25X52X7!
66627	*VIC*	222820
66627	*VIC*	28X40X7!
66628	*VIC*	222860
66628	*VIC*	28X47X7!
66629	*VIC*	28X52X7
66630	*VIC*	1970
66630	*VIC*	30X42X7!
66631	*VIC*	30X47X7
66632	*VIC*	223035
66633	*VIC*	32X45X7
66635	*VIC*	223255
66635	*VIC*	32X52X7!
66636	*VIC*	223520
66636	*VIC*	35X50X8!
66637	*VIC*	223542
66637	*VIC*	35X55X11!
66638	*VIC*	223830
66638	*VIC*	223831
66638	*VIC*	38X55X7!
66639	*VIC*	223840
66639	*VIC*	38X58X8!
6663R	*JN-MN*	**415227**!*
66640	*VIC*	38X62X7
666408	*WHITE*	80313
66642	*VIC*	224045
66642	*VIC*	40X62X12!
66643	*VIC*	42X55X8!
66644	*VIC*	224250
66644	*VIC*	42X62X8!
66645	*VIC*	1992
66645	*VIC*	45X65X8!
66647	*VIC*	225035
66647	*VIC*	50X72X8!
66648	*VIC*	55X72X8!
66649	*VIC*	55X80X8
6665	*C-R*	17X42X7
66650	*VIC*	226020
66650	*VIC*	60X80X8!
66651	*VIC*	60X85X8
66652	*VIC*	226520
66653	*VIC*	65X90X10!
666536R91	*IH*	203007=
66654	*VIC*	227040
66654	*VIC*	70X90X10!
66655	*VIC*	70X95X13
666552R91	*IH*	**472070**
666553R91	*IH*	450165
666553R91	*IH*	**471801**!
66656	*VIC*	75X95X10
66657F	*DIA*	415137!
66657F	*DIA*	**418028**
66657J	*DIA*	**416654**
66657M	*DIA*	**417159**
66658	*VIC*	228009
66658	*VIC*	228010*
66658	*VIC*	80X100X10!
66658J	*DIA*	**416282**
66659	*VIC*	85X110X12
66660	*VIC*	85X120X12
66661	*VIC*	90X120X12
66662	*VIC*	95X120X12
666626R91	*IH*	**472070**
666628R91	*IH*	203007=
66663	*VIC*	100X125X12
66665	*VIC*	120X150X12!
66666	*VIC*	130X160X12
66667	*VIC*	145X170X12!
66667	*VIC*	231404
66669	*VIC*	160X190X15
6666LA	*JN-MN*	**450474***
66670	*VIC*	170X200X15
66671	*VIC*	180X210X15

! Industrial Size/Type * Minor Width Difference

= The U.S. customer service number is 877-4-TIMKEN. The Canadian customer service numbers are 800-565-4927 (English) and 800-565-0438 (French-Canadian).

Mfr. No.	Name	Zero Duplication or Recommended Industrial
66672	*VIC*	190X220X16
66686	*VIC*	6X16X7
66687	*VIC*	6X22X7
66688	*VIC*	1952
66690	*VIC*	BS25031
66691	*VIC*	710205
66693	*VIC*	223430
66693	*VIC*	710417
66696	*VIC*	224025
66697	*VIC*	**472492**!
666973C1	*IH*	**417158***=
66699	*VIC*	224020
66699	*VIC*	40X55X8!
6669LA	*JN-MN*	**417316**!
6670	*C-R*	17X45X7*
66701	*VIC*	223830
66701	*VIC*	38X55X7!
66703	*VIC*	3772
66704	*VIC*	1021V
66704	*VIC*	BS40265
66707	*VIC*	229005
66707	*VIC*	229006*
66708	*VIC*	239146
66708	*VIC*	38X54X7!
66709	*VIC*	1973
66710	*VIC*	224462
66711	*VIC*	222510
66711	*VIC*	25X35X7!
66712	*VIC*	**473367**
66713	*VIC*	**1213N**
66714	*VIC*	1994
66714	*VIC*	48X70X9!
66715	*VIC*	1214
66715	*VIC*	1214N
66716	*VIC*	1174
66716	*VIC*	38X52X8.5!
66717	*VIC*	1960
66718	*VIC*	224520
66718	*VIC*	45X60X10!
66719	*VIC*	225275
6671LA	*JN-MN*	**417541**
6671LUP	*JN-MN*	**417541**
66720	*VIC*	55X70X8!
66721	*VIC*	1999
66723	*VIC*	239127
66724	*VIC*	239128
66725	*VIC*	239129
66726	*VIC*	225230
66726	*VIC*	52X72X8!
66727	*VIC*	225420
66727	*VIC*	54X72X10!
66728	*VIC*	1984
66729	*VIC*	1948
66729	*VIC*	55X82X12!
667293	*Y-T*	**473238**!
66730	*VIC*	226285
66730	*VIC*	62X85X8!
66731	*VIC*	710145
66732	*VIC*	1959
66733	*VIC*	224820
66733	*VIC*	48X62X8!
66734	*VIC*	1943
66734	*VIC*	224570
66734	*VIC*	45X72X12!
66735	*VIC*	224015
66737	*VIC*	224835
66737	*VIC*	48X68X10!
66738	*VIC*	**415303**!*
66741	*VIC*	225005
66741	*VIC*	50X62X7!
66742	*VIC*	1012
66742	*VIC*	1012N
66743	*VIC*	1992
667434	*ALLCH*	**417210**!
66744	*VIC*	226480
66744	*VIC*	64X80X8!
66745	*VIC*	1906
66746	*VIC*	710189
66747	*VIC*	223520
66747	*VIC*	35X50X8!
66747	*VIC*	3771
66748	*VIC*	228010
66748	*VIC*	80X100X10!
66748	*VIC*	BS40252
66749	*VIC*	1177
6675	*C-R*	17X46X7
66750	*VIC*	225420
66751	*VIC*	1955
66751	*VIC*	52X65X9!
66752	*VIC*	1176
66753	*VIC*	2002
66754	*VIC*	223520!
667567R91	*IH*	200886
66757	*VIC*	1981
66758	*VIC*	1979
66759	*VIC*	334111
667591R91	*IH*	**472572**!
667599R91	*IH*	200886
66760	*VIC*	2011
66760	*VIC*	712020
66761	*VIC*	1884
66762	*VIC*	1979*
66763	*VIC*	30X48X8!
66764	*VIC*	1174
66764	*VIC*	38X52X8.5!
66765	*VIC*	32X58X8!
66766	*VIC*	223555
66766	*VIC*	35X64X8!
667663	*Y-T*	J1114=
66767	*VIC*	1173
66768	*VIC*	2016
66769	*VIC*	1167
66770	*VIC*	224040
66770	*VIC*	42X60X7!
66771	*VIC*	1884
66771	*VIC*	52X68X8!
66772	*VIC*	341119
66773	*VIC*	226520
66773	*VIC*	65X85X10!
66774	*VIC*	224045
66774	*VIC*	40X62X12!
66775	*VIC*	1012
66775	*VIC*	1012N
66776	*VIC*	1163=
66776	*VIC*	20X30X7!
66776	*VIC*	222025
66777	*VIC*	1174
66777	*VIC*	38X52X7!
66778	*VIC*	222745
66778	*VIC*	27X45X8!
66779	*VIC*	223240
6677LA	*JN-MN*	455685
66780	*VIC*	1981
66781	*VIC*	224560
66781	*VIC*	45X68X7!
66782	*VIC*	9161
66783	*VIC*	223014
66784	*VIC*	1953
66784	*VIC*	42X60X7!
66785	*VIC*	2007N
66787	*VIC*	350609
66788	*VIC*	12X22X7!
66788	*VIC*	221207
66791	*VIC*	1965
66792	*VIC*	1216
66792	*VIC*	1216N
66793	*VIC*	222430
66793	*VIC*	24X40X7!
66794	*VIC*	225230
66794	*VIC*	52X72X8!
66796	*VIC*	1996
66797	*VIC*	**450273**
66798	*VIC*	224470
66798	*VIC*	44X72X10!
66799	*VIC*	223620
66799	*VIC*	36X68X10!
6679LA	*JN-MN*	**473227**
6679LPD	*JN-MN*	**473227**
6679LUP	*JN-MN*	**473227**!
6680	*C-R*	17X47X7!
6680	*C-R*	17X47X8
668002	*ATLAS*	6815
668004	*AT SU*	**473317**
668009	*AT SU*	9150S
668011	*AT SU*	7934S
668015	*AT SU*	8705S
668015	*ATLAS*	8705S
668016	*AT SU*	9406S
668021	*ATLAS*	8871
668024	*AT SU*	292594
668025	*ATLAS*	5121
668026	*ATLAS*	3087
668029	*ATLAS*	8974S
668034	*AT SU*	1196
668034	*ATLAS*	1198
668035	*AT SU*	224015
668035	*ATLAS*	224015
668036	*AT SU*	1950
668036	*ATLAS*	1950
668037	*AT SU*	1188
668037	*ATLAS*	1188
668038	*AT SU*	1183
668038	*ATLAS*	1183
668039	*ATLAS*	3357
66804	*VIC*	223275
66804	*VIC*	32X56X10!
668042	*AT SU*	710127
668043	*AT SU*	710108
668044	*AT SU*	710129
66805	*VIC*	224570
66805	*VIC*	45X72X7!
66806	*VIC*	1108
66806	*VIC*	1215
66806	*VIC*	1215N*
66807	*VIC*	1987
66807	*VIC*	TCS45424
66809	*VIC*	1936
6681	*C-R*	17X47X8
66812	*VIC*	2003N!
66813	*VIC*	444116
668138M1	*MASSE*	**473016**!
66818	*VIC*	1172
66819	*VIC*	50X80X8
66821	*VIC*	1985
66822	*VIC*	40X58X10!
66823	*VIC*	223580
66824	*VIC*	2008
66824	*VIC*	32X54X10!
66825	*VIC*	2011
66826	*VIC*	1990
66827	*VIC*	1215
66827	*VIC*	1215N
66828	*VIC*	223240
66828	*VIC*	32X48X8!
66829	*VIC*	224320
6682R	*JN-MN*	**416167**!
66830	*VIC*	2443
66831	*VIC*	223610
66831	*VIC*	710197!
66832	*VIC*	14X24X7!
66832	*VIC*	221410
66833	*VIC*	1989
66834	*VIC*	222655
66834	*VIC*	26X48X7!
66835	*VIC*	222535
66835	*VIC*	25X38X7!
66836	*VIC*	224255
66837	*VIC*	2007N
66838	*VIC*	494123
66839	*VIC*	225220
66839	*VIC*	52X68X8!
66840	*VIC*	**1213N**
66842	*VIC*	34X52X8
66844	*VIC*	1986
66845	*VIC*	222650
66845	*VIC*	26X47X7!
66846	*VIC*	36X47X7
66847	*VIC*	224100
668479	*CHRYS*	5836
66848	*VIC*	224820
66849	*VIC*	33X50X12!
6685	*C-R*	17X47X8
66850	*VIC*	224462
66851	*VIC*	2000
66851	*VIC*	224235
66851	*VIC*	42X58X7!
66852	*VIC*	1038
66853	*VIC*	1019
66853	*VIC*	BS40387
66854	*VIC*	224025
66855	*VIC*	115X140X12!
66855	*VIC*	231152
66856	*VIC*	231002
66857	*VIC*	65X95X8
668572	*ALLCH*	**471442**!
66858	*VIC*	225880
66859	*VIC*	710318
66860	*VIC*	2009
66861	*VIC*	1953
66863	*VIC*	1177
66864	*VIC*	223420
66865	*VIC*	223552
66866	*VIC*	1147
66867	*VIC*	1938
66868	*VIC*	223605
66869	*VIC*	224874
66870	*VIC*	224820
66877	*VIC*	800450
66878	*VIC*	344032
66879	*VIC*	225225
66879	*VIC*	225540
66880	*VIC*	225650
66880	*VIC*	56X72X11.5!
66881	*VIC*	223340
66883	*VIC*	224220
66886	*VIC*	223542
66886	*VIC*	35X55X11!
66887	*VIC*	225500
66887	*VIC*	55X68X8!
66891	*VIC*	32X48X8!
66893	*VIC*	4401=
66893	*VIC*	710156
66894	*VIC*	222820
66895	*VIC*	1015N
66895	*VIC*	18X28X6!
66896	*VIC*	220860
66896	*VIC*	8X16X7!
66897	*VIC*	16X24X7

! Industrial Size/Type * Minor Width Difference

= The U.S. customer service number is 877-4-TIMKEN. The Canadian customer service numbers are 800-565-4927 (English) and 800-565-0438 (French-Canadian).

Mfr. No.	Name	Zero Duplication or Recommended Industrial
66898	VIC	221610
668M316-L	C-R	6245S=
66902	VIC	224570
66902	VIC	45X72X7!
66903	VIC	710070
66904	VIC	1180
66905	VIC	223802
66908	VIC	710331
66909	VIC	223540
66909	VIC	223542*
66909	VIC	35X55X11!
66911	VIC	224210
66916	VIC	1937
66917	VIC	224772
66918	VIC	320595
66919	VIC	1937
66920	VIC	27X42X10
66921	VIC	18X28X6
66924	VIC	1939
66925	C-R	170X200X15*
66925	VIC	1174
66925	VIC	38X52X7!
66926	VIC	710097
66928	VIC	1140
66928	VIC	223580
66929	VIC	223543!
66930	C-R	170X200X15
66930	VIC	710111
66931	VIC	223801!
66932	VIC	710332
66940	VIC	239146
66940	VIC	38X54X7!
66941	VIC	227530
66941	VIC	716445
66942	VIC	224840
66946	VIC	710148
66947	VIC	473677
66948	VIC	225030
66949	VIC	710072
66950	VIC	1936
66952	VIC	1217
66952	VIC	224015*
66953	VIC	2025
669530R91	IH	**412119**!
66954	VIC	716102
66954	VIC	85X105X13!
66955	VIC	1036
66956	VIC	1146
66957	VIC	1126
66958	VIC	239201!
66958	VIC	4175
66959	VIC	474133
6696	SPG	**417355**!
6696	SPG	485497
66960	VIC	32X47X7!
66960	VIC	3476
66962	VIC	710215
66963	VIC	1176
66966	VIC	222556
66967	VIC	222267
66968	VIC	225020
6696S	NATL	**417355**!
6696S	NATL	485497
66970	VIC	70X95X13
66972	VIC	229010
66973	VIC	716102
66974	HYST	**323138**!
66974	VIC	229005
66975	VIC	223510
66977	VIC	228250
66977	VIC	710448
66979	VIC	710348
66980	VIC	221720
66981	VIC	**471413**!
66982	VIC	3476
66984	VIC	1181
669846	ALLCH	**413246**
669847	ALLCH	**471529**
66985	VIC	3771
66985	VIC	713771
66986	VIC	228008
66986	VIC	BS40535
66987	VIC	710234
66988	VIC	710233
66988	VIC	TCS45745
6698R	JN-MN	**415116**
66991	VIC	1217
66991	VIC	TCS45786
66992	VIC	1987
66993	VIC	1174
66994	VIC	225650
66995	VIC	473823
66996	VIC	710070
66997	VIC	226530
66998	VIC	224400
66999	VIC	710069
6699R	JN-MN	**417601**
66A	FORD	**472705**!
66X1042	GARLK	**472439**
66X1045	GARLK	**471868**
66X1048	GARLK	**472572**!
66X1051	GARLK	**473179**!
66X1057	GARLK	**473238**
66X1063	GARLK	**473239**!
66X1066	GARLK	**473457**!
66X1069	GARLK	**473240**!
66X1075	GARLK	**473458**!
66X1114	GARLK	**472319**
66X1117	GARLK	**473459**
66X1120	GARLK	**473241**
66X1129	GARLK	**472144**!
66X113	GARLK	**471553**!
66X1132	GARLK	**473460**
66X1135	GARLK	**472394**
66X115	GARLK	**471579**
66X119	GARLK	**471642**
66X1198	GARLK	**472924**!
66X1204	GARLK	**472397**!
66X1207	GARLK	**473463**
66X1210	GARLK	**473242**
66X1252	GARLK	**451948**
66X1270	GARLK	**416738**!
66X1270	GARLK	450096
66X1321	GARLK	**470898**=
66X1324	GARLK	**473467**
66X1327	GARLK	**472015**!
66X1333	GARLK	**472016**
66X1339	GARLK	**472409**!
66X1345	GARLK	**473243**
66X1357	GARLK	**416267**!
66X1357	GARLK	456267=
66X1402	GARLK	**472018**
66X1405	GARLK	**473471**
66X1408	GARLK	472020
66X1414	GARLK	**470354**
66X1420	GARLK	**473245**!
66X1426	GARLK	**413472**
66X1432	GARLK	**416268**
66X145	GARLK	**471498***
66X1471	GARLK	**471341**!
66X1474	GARLK	**471272**!
66X1480	GARLK	**471138**!
66X1486	GARLK	**410737**!
66X149	GARLK	**471684**!
66X1492	GARLK	**472636**!
66X1498	GARLK	**412920**!
66X1504	GARLK	**411376**!
66X151	GARLK	450033
66X153	GARLK	**470390**
66X1654	GARLK	**413246**
66X1657	GARLK	**412119**!
66X1660	GARLK	**413247**!
66X1666	GARLK	**416271**!
66X1669	GARLK	**412861**
66X1678	GARLK	**417480**!
66X1723	GARLK	**471887**
66X1738	GARLK	**411500**
66X1747	GARLK	**411245**!
66X1750	GARLK	**417073**
66X1801	GARLK	**472029**
66X1807	GARLK	**471271**!
66X1813	GARLK	**470605**!
66X1819	GARLK	**415449**!
66X1825	GARLK	**416273**
66X1888	GARLK	455311*
66X1933	GARLK	**413248**
66X1939	GARLK	**415483**
66X1945	GARLK	**415458**!
66X1948	GARLK	**417343**!
66X1951	GARLK	**415007**
66X2035	GARLK	**416664**!
66X2038	GARLK	**417484**!
66X2041	GARLK	**415984**!
66X2044	GARLK	**417316**!
66X2047	GARLK	**415960**
66X2050	GARLK	**416706**!
66X2118	GARLK	**417344**!
66X2121	GARLK	**417158**!
66X213	GARLK	**471267**!
66X2146	GARLK	**416956**
66X2152	GARLK	**416654**!
66X2168	GARLK	**417349**!
66X217	GARLK	**471633**!*
66X2171	GARLK	**417350**!
66X2174	GARLK	**415995**!
66X2174	GARLK	**415995**!
66X2177	GARLK	**417351**!
66X221	GARLK	**470590**
66X2249	GARLK	**456105**
66X2257	GARLK	**455336**
66X2261	GARLK	417490
66X2267	GARLK	455022
66X227	GARLK	481741=
66X2270	GARLK	**476470**!
66X2270	GARLK	**476470**
66X2273	GARLK	**417181**!
66X2276	GARLK	**418028**
66X2279	GARLK	**417353**!
66X2294	GARLK	455328
66X2366	GARLK	**415991**
66X2366	GARLK	**415991**!
66X2369	GARLK	**417196**!
66X2375	GARLK	**417198**
66X2417	GARLK	**416332**!
66X2420	GARLK	**415937**!
66X2426	GARLK	**416125**!
66X2432	GARLK	**417499**
66X2433	GARLK	**417355**!
66X2435	GARLK	415832
66X2438	GARLK	417500
66X2462	GARLK	**415379**
66X2465	GARLK	**417205**!
66X2468	GARLK	**416339**
66X2537	GARLK	**415035**
66X2540	GARLK	**417356**!
66X2543	GARLK	**417357**
66X2546	GARLK	**416130**!
66X2555	GARLK	**415041**
66X2657	GARLK	416556!
66X2657	GARLK	**472157**
66X2663	GARLK	**416891**!
66X2753	GARLK	**416888**!
66X2756	GARLK	**416153**!
66X289	GARLK	**473380***
66X3125	GARLK	**455576**!
66X3128	GARLK	**415938**
66X323	GARLK	**471651**
66X325	GARLK	**471705**!
66X327	GARLK	**473419**!
66X3275	GARLK	**417362**!
66X3278	GARLK	417363
66X3281	GARLK	**416666**
66X333	GARLK	**471762**!
66X35	GARLK	**472810**!
66X352	GARLK	**471652**
66X355	GARLK	**476838**!
66X357	GARLK	**470712**!
66X359	GARLK	**471763**
66X361	GARLK	**471785**!
66X383	GARLK	**472475**
66X384	GARLK	**472475**
66X385	GARLK	**473426**
66X387	GARLK	**471765**!
66X3872	GARLK	**471747**!
66X3880	GARLK	**471344**
66X3883	GARLK	**473442**!
66X394	GARLK	**473205**
66X424	GARLK	**471750**!
66X427	GARLK	**471766**!
66X430	GARLK	**471787**!
66X436	GARLK	**471795**
66X439	GARLK	450165
66X439	GARLK	**471801**!
66X442	GARLK	**471808**!
66X451	GARLK	**473424**!
66X4802	GARLK	450545
66X4965	GARLK	451031=
66X535	GARLK	**470774**!
66X541	GARLK	**471192**
66X544	GARLK	**473214**
66X547	GARLK	**473215**!
66X550	GARLK	470950!
66X550	GARLK	6241S
66X556	GARLK	**471835**!
66X592	GARLK	**473224**!
66X595	GARLK	**473016**!
66X598	GARLK	**473225**!
66X643	GARLK	**470625**!
66X645	GARLK	**471818**
66X655	GARLK	**473228**
66X664	GARLK	**473440**!
66X6658	GARLK	**471276***
66X700	GARLK	**472213**
66X703	GARLK	**472299**
66X706	GARLK	**471821**!
66X712	GARLK	**473229**
66X7126	GARLK	**470596***
66X715	GARLK	**470682**
66X7164	GARLK	**473455**!
66X718	GARLK	**471316**
66X7249	GARLK	**416127**
66X7282	GARLK	**470088**
66X739	GARLK	**482253**
66X760	GARLK	**473231**
66X763	GARLK	**473367**
66X763	GARLK	**473367**!
66X769	GARLK	**473010**
66X772	GARLK	**473232**

! Industrial Size/Type * Minor Width Difference

= The U.S. customer service number is 877-4-TIMKEN. The Canadian customer service numbers are 800-565-4927 (English) and 800-565-0438 (French-Canadian).

Mfr. No.	Name	Zero Duplication or Recommended Industrial
66X775	GARLK	**481864**
66X787	GARLK	**473444**
66X7934	GARLK	55469*
66X7941	GARLK	455509*
66X8074	GARLK	**471827**!*
66X8081	GARLK	**450819***
66X826	GARLK	**473233**!
66X8342	GARLK	450557
66X8342	GARLK	**471255**!
66X835	GARLK	**473234**
66X838	GARLK	**473235**!
66X844	GARLK	**473236**!
66X859	GARLK	**471981**
66X899	GARLK	**471504**!
66X907	GARLK	**472185**!
66X910	GARLK	**470334**!
66X913	GARLK	**472179**
66X922	GARLK	**471141**!
66X925	GARLK	**473448**
66X928	GARLK	**471984**
66X931	GARLK	**473313**
6700157	GMC	**417210**!
67002	VIC	710093
6700209	GMC	**417354**!
67003	VIC	223550
67004	VIC	225872
67005	VIC	1973
6700576	GMC	476591N=
6700577	GMC	**471766**!
67006	VIC	494123
67007	VIC	**1213N**
67008	VIC	223542
6700846	GMC	**471567**!
67009	VIC	1975
67010	VIC	473677
670118	WHITE	370036A
670118	WHITE	370349A
670142	ALLCH	**473214**!
670186	ALLCH	**417349**
67028	VIC	225082
67029	VIC	1205
67029	VIC	1205N
6702955	GMC	**471472**!
6702R	JN-MN	417780
6703077	GMC	**417343**=
6703154	GMC	**415995**!
6703159	EUCLD	**471224**!
6703159	GMC	**471224**!
67032	VIC	712008
67033	VIC	1216
67033	VIC	1216N
67035	VIC	1215
67035	VIC	1215N
67036	VIC	2011
67037	VIC	1216
67037	VIC	1216N
67039	VIC	221620
67040	VIC	222830
67041	VIC	222742
67042	VIC	710157
67043	VIC	710110
67044	VIC	224200
67045	VIC	710314
67046	VIC	224026
67047	VIC	224026
67047	VIC	710300
67047	VIC	712551*
67048	VIC	1990
67049	VIC	2655
6704SS	JN-MN	**471076**
67052	VIC	223843
67053	VIC	224045
67054	VIC	223553*
67054	VIC	4901
67055	VIC	224063
67057	VIC	221607
67058	VIC	710116
67059	VIC	221620
67060	VIC	710297
67061	VIC	1216
67061	VIC	1216N
67063	VIC	710051
67065	VIC	714503
67066	VIC	223801!
67067	VIC	221607
67068	VIC	40X58X10!*
67069	VIC	1990
67070	VIC	222430
67071	VIC	1981
67072	VIC	223535
67073	VIC	223520!
67074	VIC	2007N
67075	VIC	224066
670752	CHRYS	**471827**
67077	VIC	**1213N**
67078	VIC	710218
67079	VIC	222238
67080	VIC	223014
67083	VIC	80X125X12
67085	VIC	228520
67085	VIC	85X110X12!
67086	VIC	125X150X12!
67086	VIC	231250
67087	VIC	227550
67087	VIC	75X100X12!
67088	VIC	229520
67088	VIC	95X130X12!
67089	VIC	68X90X10!
67089	VIC	712108
67090	VIC	90X125X12
67091	VIC	120X145X12!
67091	VIC	231204
67092	VIC	110X140X12!
67092	VIC	231108
67093	VIC	717006
67094	VIC	140X170X15!
67094	VIC	231405
67095	VIC	100X130X12!
67096	VIC	140X160X13!
67096	VIC	231402
67098	VIC	474230
67099	VIC	717004
671	C-R	5MR1300
67100	VIC	710090
67101	VIC	710085
67102	VIC	710086
67103	VIC	710088
67104	VIC	712003
67104	VIC	717004
67105	VIC	710376
67106	VIC	120X150X12!
67106	VIC	231206
67107	VIC	710089
67108	VIC	710374
671084	GMC	**472394**
67109	VIC	717005
6710SS	JN-MN	**471646**!
6711	SPG	205004
67110	VIC	225225
67110	VIC	52X70X8!
671101	GMC	**473205**
67111	VIC	224015*
67111	VIC	224052*
67111	VIC	710308
67115	VIC	710225
671151	CHRYS	**415449**!
67116	VIC	1207
67116	VIC	1207N
67117	VIC	1964
67118	VIC	710150
67119	VIC	228410
67120	VIC	229210
67121	VIC	228009
67122	VIC	224650
67123	VIC	228009
67124	VIC	224015
67128	VIC	222745
67129	VIC	27X45X8!
6712N	SPG	**473179**
67130	VIC	223050
671308	GMC	**411500**
67131	VIC	30X50X7
67132	VIC	3476
67133	VIC	1180
67134	VIC	710092
67136	VIC	712551
67137	VIC	1941
67138	VIC	224026
67139	VIC	225673
67140	VIC	**471643**!
67142	VIC	710156
67143	VIC	4898
67149	VIC	710112
67150	VIC	229005*
67150	VIC	BS40598
67151	VIC	223800
67151	VIC	223801*
67154	VIC	710073
67156	VIC	1935
67157	VIC	4899
67158	VIC	225673
67159	VIC	1993
67160	VIC	710076
67161	VIC	225410
67162	VIC	1174
67163	VIC	1928
67164	VIC	224870
67166	VIC	221922
67171	VIC	225275
67172	VIC	225678
67173	VIC	226150
67174	VIC	710175
67175	VIC	710168
67176	VIC	710192
67177	VIC	1953
671789	GMC	730034
67179	VIC	1971
67180	VIC	710194
67181	VIC	1974
67184	VIC	221510
67186	VIC	710228
67187	VIC	1974
67188	VIC	224462
67189	VIC	710230
67190	VIC	225650
67191	VIC	710228
67192	VIC	225673
67193	VIC	**471267**!
67194	VIC	710226
67195	VIC	710253
67198	VIC	710109
6719LA	JN-MN	**415072**
6720	C-R	3667
67200	VIC	1012
67201	VIC	223552
67204	VIC	224254
67205	VIC	710255
67208	VIC	1932
67209	VIC	710236
67211	VIC	223230
67211	VIC	320348
67211	VIC	TCS45918
67212	VIC	710327
672138R91	IH	**472015**!
67218	VIC	710072
67219	VIC	226530
67220	VIC	225877
67222	VIC	224250
67224	VIC	710313
672303	GMC	470059
672303	GMC	**470380**!
67231	VIC	226610
67232	VIC	710166
67233	VIC	223831
67234	VIC	223410
67235	VIC	710170
67236	VIC	710165
67237	VIC	224252
67242	VIC	**472311**
67245	VIC	**471224**
67247	VIC	**471649**!
67251	VIC	16X24X6
67256C1	IH	416556!
67256C1	IH	**472157**
67257	VIC	20X36X7
67258	VIC	1932
67259	VIC	710109
67260	VIC	710110
67262	VIC	224663
67264	VIC	2027
67265	VIC	710248
67267	VIC	3459
67272	VIC	1015N
67273	VIC	710259
67274	VIC	226820
67277	VIC	710217
67278	VIC	710094
6727LA	JN-MN	**473238**
6728	C-R	17X27X7
67283	VIC	710127
67285	VIC	710125
67286	VIC	710108
67288	VIC	710107
67289	VIC	710178
6728LA	JN-MN	50419
6729	C-R	17X27X7
67290	VIC	1177
67291	VIC	224872
67292	VIC	224874
67292195	BUC-E	470059
67292195	BUC-E	**470380**!
67293	VIC	16X24X6
67299	VIC	224820
67301	VIC	223010
673013R91	IH	**417343**!
67308	VIC	710114
6730LA	JN-MN	**416888**!
67321	VIC	710195
67322	VIC	2011
67331	VIC	225110
67334	VIC	413818
67335	VIC	710141
67336	VIC	1176
67337	VIC	4898
67339	VIC	710140
67340	VIC	223440
67345	VIC	34X52X8
673467	GMC	730149

! Industrial Size/Type * Minor Width Difference

= The U.S. customer service number is 877-4-TIMKEN. The Canadian customer service numbers are 800-565-4927 (English) and 800-565-0438 (French-Canadian).

Mfr. No.	Name	Zero Duplication or Recommended Industrial
673468	*GMC*	HU149A
67347	*VIC*	710124
673472	*BENDI*	**471354**!
67351	*VIC*	223462
67353	*VIC*	224040
67356	*VIC*	710286
67359	*VIC*	224520
67360	*VIC*	710115
673600	*GMC*	**473447**
67366	*VIC*	223845
67367	*VIC*	710122
67368	*VIC*	710139
67370	*VIC*	40X72X7
67371	*VIC*	224252
67374	*VIC*	224010
67378	*VIC*	710305
6738	*C-R*	**471529**
67381	*VIC*	710357
67383	*VIC*	225030
673833R91	*IH*	**473454**
673834R91	*IH*	**472397**!
673835R91	*IH*	**415449**!
67385	*VIC*	710071
67386	*VIC*	226018
67387	*VIC*	710169
67388	*VIC*	710144
67390	*VIC*	710400
67393	*VIC*	65X80X8
67397	*VIC*	710156
67398	*VIC*	2027
673983	*ALLCH*	**415349**=
674-D2	*REO*	370001A
6740	*C-R*	**471529***
67400	*VIC*	3816
67402	*VIC*	221540
67403	*VIC*	221720
67404	*VIC*	16X24X6
67405	*VIC*	221610
67406	*VIC*	222535
67408	*VIC*	222430
67409	*VIC*	222025!
6741	*C-R*	**471529**
67410	*VIC*	222050
674105	*ROCKW*	**455858**
674105	*WHITE*	**455858**
67411	*VIC*	20X35X7!
674176C91	*IH*	452872=
674237	*GMC*	370007A
67424	*VIC*	20X35X7!
67427	*VIC*	223215
67428	*VIC*	1170
6743	*C-R*	**471529**
67430	*VIC*	710123
67431	*VIC*	710118
67432	*VIC*	**1213N**
67434	*VIC*	710208
67435	*VIC*	710126
67438	*VIC*	710260
6743LA	*JN-MN*	417536
67441	*VIC*	710173
67442	*VIC*	710239
67448	*VIC*	710240
67451	*VIC*	710256
67452	*VIC*	710255
67482	*VIC*	35X48X8!
67486	*VIC*	224850
67487	*VIC*	710343
6749	*C-R*	**471529**
67491	*VIC*	1037
67497	*VIC*	223805
6749LA	*JN-MN*	**476470**
674D-641-H12	*BENDI*	**415034**!
674D-641-H16	*BENDI*	**416666**
675007R91	*IH*	**450326**
675008R91	*IH*	**470565**=
675009R91	*IH*	**415389**
6750156	*GMC*	**416107**!
6750156	*GMC*	455073
6750157	*GMC*	415192N
6750231	*GMC*	**415437**
6750268	*GMC*	**415041**=
67504	*VIC*	45X70X10
6750415	*GMC*	415146!
6750415	*GMC*	**415991**
6750426	*GMC*	**471466**!
67505	*VIC*	224045
67507	*VIC*	223840
675097R91	*IH*	**471554**!
6751	*C-R*	**471538**
6751056	*GMC*	240736
67512	*VIC*	224510
67515	*C-R*	**415327***
675162R1	*IH*	JV1179=
675168R91	*IH*	200855
67518	*VIC*	223400
6751818	*GMC*	**471341**!
67519	*VIC*	710305
6752035	*GMC*	**471526**!
67521	*VIC*	710266
6752372	*GMC*	**415138**!
6752373	*GMC*	**416107**!
6752373	*GMC*	455073
67524	*VIC*	60X75X8!
675242	*WHITE*	**415458**!
67525	*C-R*	**415327***
6752S	*NATL*	**412473**!
67530	*C-R*	**415327**
67533	*C-R*	**417596**
675334	*CATER*	**415447**
675346	*GMC*	**417507**
6753849	*GMC*	**417350**!
67543	*VIC*	710155
67544	*VIC*	222410
675442	*GMC*	**472015**
675443	*GMC*	3893V!
675443	*GMC*	**415379**!
67547	*VIC*	225460
675473	*ALLCH*	410930=
6754947	*GMC*	**415988**
6755	*C-R*	**417542**
6755	*FULLE*	**417082**
6755	*SPG*	**416892**
67550	*C-R*	**417596**
67551	*C-R*	**417596**
675512	*C-R*	**417554**!
675514	*C-R*	55357
675516	*C-R*	**416107**!
675516	*C-R*	455073
675516	*CABOT*	**416107**!
675516	*CABOT*	455073
675516	*MINMA*	**416107**!
675516	*MINMA*	455073
675516M1	*BUC-E*	**416107**!
675516M1	*BUC-E*	455073
675516M1	*C-R*	**416107**!
675516M1	*C-R*	455073
67551WK	*SUL*	**416107**!
67551WK	*SUL*	455073
675524	*C-R*	**417362**!
675528	*C-R*	55392=
67554	*CINMI*	**472016**
67557	*C-R*	416008
67558	*C-R*	**417549**!
6755898	*GMC*	**412119**
6755LA	*JN-MN*	**471688***
6755LPD	*JN-MN*	**471688**
67560	*VIC*	710088
6757	*C-R*	710344
6757264	*GMC*	**471760**
6757463	*GMC*	**416107**!
6757463	*GMC*	455073
6757751	*GMC*	**416229**
67580	*VIC*	25X62X10
675861C1	*IH*	JX1747
675861C2	*IH*	JX1747
675896	*CLARK*	**455330**!
6758LA	*JN-MN*	**471272**!
6759	*C-R*	**471529**
6759135	*GMC*	**415991**
6759135	*GMC*	455146!
67598	*VIC*	TCS45870
675H516	*C-R*	**416107**!
675H516	*C-R*	455073
675W516	*C-R*	**416107**!
675W516	*C-R*	455073
676-D2	*REO*	370057A
6760	*C-R*	**471529**
676031C91	*IH*	5629
676032R91	*IH*	**472924**!
676141	*ALLCH*	JX1190
676168M1	*MASSE*	**473214**
676169M1	*MASSE*	**471766**!
676182M1	*MASSE*	470950!
676182M1	*MASSE*	6241S
6761LA	*JN-MN*	**410496**!
6762	*C-R*	**474261***
6762841	*GMC*	**471442**!
6763	*C-R*	**474261**
67631C1	*IH*	**473232**!
6764LA	*JN-MN*	55357
6765	*C-R*	**471538**!
676593	*GMC*	**252277**
676595	*GMC*	**472015**
6765R	*JN-MN*	**417211**!
6766	*C-R*	**471538**!*
6767	*C-R*	**471538**!
67675R92	*IH*	6532S=
6768	*C-R*	471538V
6768417	*GMC*	311189N=
6768481	*GMC*	**415138**!
676852R91	*IH*	**413248**
6769	*C-R*	471538V
676910	*GMC*	50631
67696R91	*IH*	415060
67696R91	*IH*	455060
676T5	*WHITE*	**471224**!
677	*C-R*	5M643
677039X91	*IH*	**476470**=
6771231	*GMC*	**415995**!
677188	*ALLCH*	**471787**!
6771984	*GMC*	416426N=
6771SS	*JN-MN*	**471705**!
6772050	*GMC*	**471554**!
6772890	*GMC*	**415991**=
6773186	*EUCLD*	415192N
6773186	*GMC*	415192N
6773201	*GMC*	**471224**!
6773249	*GMC*	**472179**
6773311	*GMC*	476424N
6773466	*GMC*	**415988**=
67738	*DENCO*	**415995**!
67742	*DENCO*	**470898**!
6774SH	*JN-MN*	**474265**
6775412	*GMC*	**470712**!
6775516	*GMC*	**415088**=
6775628	*GMC*	**415991**
6775628	*GMC*	**415991**!
677566	*GMC*	**412119**
6775LA	*JN-MN*	**471705**!*
6776197	*GMC*	415073H=
6776197	*SPICE*	**416107**!
6778	*EATON*	5MR71
6778050	*GMC*	**415988**
677812	*CATER*	**472299**=
677812	*TMTR*	**472299**
67790C2	*IH*	**480630**!
677917R91	*IH*	**417198**=
67806TA	*TRSCM*	416362
6782	*C-R*	**471538**!
678270	*FLXIB*	**473215**!
678270	*GMC*	**473215**!
6783	*C-R*	**471538**!
6785	*C-R*	**471538**
678526C1	*IH*	5228*=
678527C1	*IH*	5199*=
6786LA	*JN-MN*	**450776**!
678805	*GMC*	**473010**
678D5	*WHITE*	**473231**!
679-D2	*REO*	370007A
679001	*GMC*	370008A
679002	*GMC*	370008A
679007	*GMC*	370012A
679008	*GMC*	370012A
6796LA	*JN-MN*	**416666**
679752	*CHRYS*	**471827**
6797LA	*JN-MN*	**415072***
67980	*ALLCH*	50501
6798LA	*JN-MN*	**417562**
679918	*GMC*	**417480**!
679939	*GMC*	**415023**
67X1048	*GARLK*	**472572**!
67X1051	*GARLK*	**473179**!
67X1057	*GARLK*	**473238**
67X1063	*GARLK*	**473239**!
67X109	*GARLK*	**471529**
67X111	*GARLK*	**471538**!
67X113	*GARLK*	**471553**!
67X115	*GARLK*	**471579**
67X1186	*GARLK*	**471870**!
67X1189	*GARLK*	**472492**!
67X1198	*GARLK*	**472924**!
67X1204	*GARLK*	**472397**!
67X1321	*GARLK*	**470898**=
67X1324	*GARLK*	**473467**
67X1327	*GARLK*	**472015**!
67X143	*GARLK*	**471567**!
67X147	*GARLK*	**471643**!
67X1471	*GARLK*	**471341**!
67X1474	*GARLK*	**471272**!
67X1492	*GARLK*	**472636**!
67X1504	*GARLK*	**411376**!
67X151	*GARLK*	450033
67X153	*GARLK*	**470390**
67X159	*GARLK*	**481443**!
67X161	*GARLK*	**481568**!
67X1639	*GARLK*	**473474**
67X1654	*GARLK*	**413246**
67X1666	*GARLK*	**416271**!
67X1669	*GARLK*	**412861**
67X1801	*GARLK*	**472029**
67X1807	*GARLK*	**471271**!
67X1822	*GARLK*	**415001**!
67X1828	*GARLK*	**455079**!
67X1834	*GARLK*	**455655**!
67X2035	*GARLK*	**416664**!
67X2038	*GARLK*	**417484**!
67X2041	*GARLK*	**415984**!
67X2050	*GARLK*	**416706**!

! Industrial Size/Type * Minor Width Difference

= The U.S. customer service number is 877-4-TIMKEN. The Canadian customer service numbers are 800-565-4927 (English) and 800-565-0438 (French-Canadian).

Mfr. No.	Name	Zero Duplication or Recommended Industrial
67X213	GARLK	**471267**!
67X215	GARLK	**471570**!
67X2168	GARLK	**417349**
67X217	GARLK	**471633**!
67X2174	GARLK	**415995**!
67X2174	GARLK	**415995**!
67X219	GARLK	**471646**!
67X225	GARLK	**471730**
67X269	GARLK	**451583**!
67X273	GARLK	**471648**
67X275	GARLK	**471688**
67X287	GARLK	**471224**!
67X291	GARLK	**471649**!
67X293	GARLK	**471689**!
67X295	GARLK	**450593**!
67X297	GARLK	**471733**
67X301	GARLK	**471760**
67X303	GARLK	**471619**!
67X351	GARLK	**471652**
67X353	GARLK	**471692**!
67X355	GARLK	**476838**!
67X359	GARLK	**471763**
67X361	GARLK	**471785**!
67X4584	GARLK	**473197**
67X51	GARLK	**471526**!
67X53	GARLK	**471472**!
67X535	GARLK	**470774**!
67X541	GARLK	**471192**
67X544	GARLK	**473214**!
67X547	GARLK	**473215**!
67X55	GARLK	**471549**!
67X556	GARLK	**471835**!
67X643	GARLK	**470625**!
67X646	GARLK	470059
67X646	GARLK	**470380**!
67X655	GARLK	**473228**
67X658	GARLK	**451857**
67X664	GARLK	**473440**!
67X67	GARLK	**471281**!
67X69	GARLK	**471535**!
67X700	GARLK	**472213**
67X71	GARLK	**471551**!
67X87	GARLK	**471466**!
67X898	GARLK	**471504**!
67X904	GARLK	**472164**!
67X91	GARLK	**471255**!
67X913	GARLK	**472179**
67X922	GARLK	**471141**!
67X925	GARLK	**473448**
67X928	GARLK	**471984**
67X93	GARLK	**471564**
680090C1	IH	JX1831=
6800LA	JN-MN	**471647**
6800LPD	JN-MN	**471647**
6800S	NATL	**471466**!
68016	C-R	JV753
68016	DENCO	**415138**!
6801S	SPG	**471264**!
680273R91	IH	370007A
68029	VIC	453066!
68029	VIC	**470898**
6802S	SPG	**481443**!
680392	GMC	**417505**
6806	C-R	**471538**!
680622	ALLCH	**470596**
6807	C-R	**471538**
6808	SPG	6808N
680842C91	IH	482126
680862C1	IH	JX1505=
6808LA	JN-MN	**417501**
680954	ALLCH	**471344**
68097	DENCO	**470898**!
681175	FORD	**416738**!
681175	FORD	450096
681278-R1	IH	733067
68130R91	IH	**472015**!
681323	CHRYS	**474264**
6814	C-R	**471553**!
6814LA	JN-MN	**415021**
6815	C-R	**471553**!
681596	GMC	**417159**
6816	C-R	**471553**!
681639	GMC	50501
681675	GMC	**470334**!
68187	CATER	**471735**
6818LA	JN-MN	**415027**
6818LA	JN-MN	**415027**!
6819970046	FREIG	370023A
6822	SPG	**472572**!
68224	ALLCH	**474276**!
68224	KEN	**474276**!
682805R91	IH	**472394**
682809	GMC	415137!
682809	GMC	**418028**
6828S	NATL	**473229**
6830097	GMC	**472164**=
6830097	GMC	**472164**!
6830153	GMC	**471766***=
6831418	GMC	**472015**=
6831A	C-R	**472185**!
683225R91	IH	5408$
683226R91	IH	5408
68328	AM WH	**416339**
68328	AM WH	455031!
6833271	GMC	**415027**
683334R91	IH	**472492**!
683380	GMC	**416706**
6834909	GMC	**472397**=
6834S	SPG	455037
683523	GMC	6808N
683590	GMC	370008A
683591	GMC	**417506**
6836	C-R	**471553**!
6836LA	JN-MN	**472213**
6836LUP	JN-MN	**472213**
6837	C-R	**471553**!
6837288	GMC	454136N
6838378	RCA	240435
6838600	GMC	**417495**
6840	SPG	6840S
6840LA	JN-MN	**417597**
6840LPD	JN-MN	**417597**
6840LUP	JN-MN	**417597**
6841	SPG	6985
684164	GMC	**473473**
6841STLPD	JN-MN	509503=
6842S	SPG	7600S
68433DM	IH	**350435**
6845	NATL	**413469**!
684783	CATER	**470898**
684806	ALLCH	**416364**!
6848R	JN-MN	**474274**
68509	DENCO	**471958**
6850LA	JN-MN	**473228**
6851LA	JN-MN	**471553**!
685215	GMC	370003A
685262	GMC	**471271**!
68532R91	IH	5406
68536R91	IH	**415960**
685555	GMC	**473231**
6855W	DIA	**473473**
68599	BOSTN	250437V
6860S	NATL	**410496**!
6861S	NATL	**471267**!
68621	DENCO	**415995**!
6862LA	JN-MN	**416364**!
6862LPD	JN-MN	**416364**!
6862S	SPG	**417210**!
68630022	WITTE	240119
68630031	WITTE	450536N=
68630039	WITTE	**474253**=
68630061	WITTE	**471750**!
68630150	WITTE	**472179**
68630201	WITTE	**472924**!
68630211	WITTE	**472012**
68630220	WITTE	**470898**
68630270	WITTE	**411245**!
68630301	WITTE	**416273**!
68630373	WITTE	**417349**
68630374	WITTE	**416654**
68630380	WITTE	**415995**!
68630509	WITTE	**415697**!
68630509	WITTE	455547
68630673	GA-WO	**415725**!
68630783	GA-WO	**417365**
68630983	GA-WO	**415090**
6863S	NATL	50199S!
6864S	NATL	**417505**
68666	CATER	**471267**!
6869LA	JN-MN	**415988***
6869LUP	JN-MN	**415988**
6869S	SPG	370005A
68717	AM WH	**473010**
6871LA	JN-MN	**417496***
6871LUP	JN-MN	**417496**
68720	C-R	**455948**
6872LA	JN-MN	**415379**
6872LA	JN-MN	**415379**!
6872LPD	JN-MN	**415379**
6872LPD	JN-MN	**415379**!
68745	C-R	**455584***
6874A	HERCU	**473232**
6874S	SPG	**473234**!
68750	C-R	**455584**
68751	C-R	**455584**
6875LA	JN-MN	**416239**!
6875S	SPG	**471827**
687686	CHRYS	**470354**
6876LA	JN-MN	**416865**!
687707C91	IH	**416404**
68775	DENCO	**416149**
687758	SPERY	**471649**!
687803C91	IH	**416404**
6878S	SPG	**473367**!
6878S	SPG	**473367**
6879	C-R	**471553**!
687900	IH	**416557**
6879H	NATL	453066
6879LA	JN-MN	**473475**
6879LPD	JN-MN	**473475**
687W837	CONE	5538
6880	C-R	**471553**!
68800	C-R	175X200X15*
688019	GMC	487397N*
688032	GMC	J1109
688033	GMC	J1113*
688034	GMC	**413470**!
688035	GMC	**413246**
688061	GMC	370005A
688080	GMC	5161=
688131	US-EL	**473203**
68819	DENCO	**410987**!
68819	DENCO	450686
6882	C-R	**471553**!
688282	GMC	JV1837
688283	GMC	JV1836=
6882LA	JN-MN	**471870**!
6882S	SPG	6966S
6883697	GMC	**417316**!
6883LA	JN-MN	**413248**
6883S	SPG	6241S
6884S	SPG	3103!
6885	C-R	417543
688520	C-R	**417556**
688520	MINMA	**417556**
688520M1	C-R	**417556**
6885A	C-R	**410987**!
68903	DENCO	**471192**
68904	DENCO	**413247**!
6894S	SPG	**415449**!
6895R	JN-MN	**417158**!
68988	DENCO	**470898**!
68989	DENCO	**471766**!
6899C	DIA	6532S=
6899F	DIA	5951
6899H	DIA	**417171**!
68AB1190AA	FORD	**3395**!
68GG7048A1A	FORD	2503
68GG7048A1A	FORD	2503N
68X100X10AN	ISP	68X100X10
68X100X13SC	TRSCM	68X100X13
68X100X13TC	TRSCM	68X100X13
68X109	GARLK	**471529**
68X111	GARLK	**471538**!
68X113	GARLK	**471553**!
68X115	GARLK	**471579**
68X1324	GARLK	**473467**
68X143	GARLK	**471567**!
68X147	GARLK	**471643**!
68X151	GARLK	450033
68X153	GARLK	**470390**
68X159	GARLK	**481443**!
68X161	GARLK	**481568**!
68X215	GARLK	**471570**!
68X217	GARLK	**471633**!
68X219	GARLK	**471646**!
68X225	GARLK	**471730**
68X269	GARLK	**451583**!
68X273	GARLK	**471648**
68X275	GARLK	**471688**
68X291	GARLK	**471649**!
68X297	GARLK	**471733**
68X301	GARLK	**471760**
68X51	GARLK	**471526**!
68X53	GARLK	**471472**!
68X55	GARLK	**471549**!
68X69	GARLK	**471535**!
68X71	GARLK	**471551**!
68X85X8AN	ISP	68X85X8
68X87	GARLK	**471466**!
68X90X10SC	TRSCM	68X90X10
68X90X10TC	TRSCM	68X90X10
68X90X8	ISP	68X90X7*
68X91	GARLK	**471255**!
68X93	GARLK	**471564**
68X95X10	ISP	68X95X10
690080800	EATON	**470565**=
690097	EATON	**416404**=
6900997	EATON	**416404**=
6902001	ARMCO	J1141
6902014	EATON	**417484**
69020R91	GMC	**415085**!
69020R91	GMC	456648
69028	HYST	**411376**!
6903A	C-R	**416956**
690764	GMC	**415027**
690807	SPERY	**417562**
69084	ALLCH	450104

! Industrial Size/Type * Minor Width Difference $ F-M Number Is Part Of A Kit
= The U.S. customer service number is 877-4-TIMKEN. The Canadian customer service numbers are 800-565-4927 (English) and 800-565-0438 (French-Canadian).

Mfr. No.	Name	Zero Duplication or Recommended Industrial
69102S	TROS	8974S
69139	CUMMI	**473224**!
69139C1	IH	**473462***
691631C91	IH	5624
691666	WHITE	**471267**!
6916LPD	JN-MN	**417563**
6920	C-R	**471553**!
69215	AM WH	**473016**!
6924A	JOY	**415960**
6924LA	JN-MN	**415001**!
6926	JOY	**476470**
692612	GMC	**350435**
6927	JOY	**415001**!
6928	JOY	**417316**!
69290	CATER	**473237**!
69290	TMTR	**473237**!
692956	GMC	**410102**
69307R91	IH	**415437**
69307R91	IH	**415437**!
69319	C-R	455592
6932LA	JN-MN	**471567**!
6932LPD	JN-MN	**471567**!
693323R91	IH	**415960**
6934	C-R	**471579***
693463-1	SPICE	**473228**
6935	C-R	**471579***
6935LA	JN-MN	**417247**!
6935LPD	JN-MN	**417247**!
69367C1	IH	**417159**
6936LA	JN-MN	**473238**!
6936LPD	JN-MN	**473238**!
6939	FULLE	**472572**!
6939	NATL	9568
6941LA	JN-MN	**455080***
6942R	JN-MN	**473242**
6943	FULLE	**410102**
69437	ALLCH	**471795**
694389	GMC	730024
69478R91	IH	**417487**
6948S	SPG	**471267**!
69510K	TRISL	370036A
69510K	TRISL	370349A
695137	CLARK	**471504**!
6951LPD	JN-MN	**417608***
6951S	SPG	7686S
69520K	TRISL	370065A
695217	ALLCH	486923V=
6953	NATL	44052
6953	WMG	44052
6954	C-R	**471579***
6954	SPG	6954S
695410	CLARK	**473463**
695463-2	SPICE	100495
695463-2	SPICE	**417349**
695463-3	SPICE	455509
6954631	SPICE	**471192**
6955	C-R	**471579***
69550	SHOV	**471192**
6956	NATL	44053
6956	WMG	44053
6956R	JN-MN	**472409**!
6957LA	JN-MN	**416107**!
6957LA	JN-MN	455073
69589K	TRISL	370013A
69590K	TRISL	370002A
69591K	TRISL	370029A
69594K	TRISL	AR2+370026A
69596K	TRISL	370065A
69597K	TRISL	370036A
69597K	TRISL	370349A
69598K	TRISL	386025A
69598K	TRISL	**416158**
69599K	TRISL	370037A
69599K	TRISL	370338A
69623	BOSTN	8597S
69628K	TRISL	AR12+370033A
6962S	SPG	3103!
69634H	IH	**473238**
6964	C-R	**471579**
69647	BOSTN	**450621**
6965	C-R	**471579**
69656	CUMMI	**473224**!
69687K	TRISL	370002A
69688K	TRISL	370002A
69689K	TRISL	AR4+370011A
69690K	TRISL	370007A
69691K	TRISL	370015A
69692K	TRISL	370124A
69693K	TRISL	370012A
69695K	TRISL	370054A
69696K	TRISL	370131A
69698K	TRISL	AR10+370020A
69699K	TRISL	370001A
69709AB	CASE	**415138**!
697119R91	IH	**416865**!
6973	SPG	205017
69740	BR-ST	**474255**
69743K	TRISL	370106A
697494R91	IH	240731
6975LA	JN-MN	**416476**!
697632	GMC	370120A
69780K	TRISL	370057A
69781K	TRISL	370069A
69781K	TRISL	380069A
69782K	TRISL	370121A
69783K	TRISL	AR20+370004A
69784K	TRISL	370007A
69785K	TRISL	370047A
69786K	TRISL	**415437**
69787K	TRISL	**417506**
69788K	TRISL	**415058**
69789K	TRISL	370006A
6979	C-R	**471579***
69790K	TRISL	370036A
69790K	TRISL	370349A
69791	CUMMI	**474276**!
69791K	TRISL	370021A
69792K	TRISL	370019A
69793K	TRISL	**416892**
69794K	TRISL	370023A
69795K	TRISL	370030A
69797K	TRISL	370019A
69798K	TRISL	370005A
69799K	TRISL	370003A
698028	WHITE	370023A
698318R91	IH	**471689**!
698444R91	IH	370036A
698444R91	NAVST	370349A
698446R91	IH	**470530**!
698447R91	IH	**472179**
698448R91	IH	**415138**!
698449R91	IH	**410496**!
698457R91	IH	**416288**
69858	BR-ST	**471760**
698764R1	IH	5M497
698768	GMC	370037A
698768	GMC	370338A
6988S	SPG	**473459**
6990	C-R	**471642**
6992	C-R	710251
6994LA	JN-MN	55692=
69956	AM WH	**471224**!
69GG4676A9B	FORD	2642
6B1070	CATER	**480630**!
6B1073	CATER	**480630**!
6B1156	CATER	**475384**
6B1157	CATER	450533
6B1310	CATER	**474265**
6B14538	FORD	**471442**!
6B1890	CATER	**455144**
6B203745	FWD	50075=
6B2576	CATER	**473227**
6B2789	CATER	**471224**!
6B305	ALLCH	**416888**!
6B3526	CATER	**450040**
6B3679	CATER	**474276**!*
6B5333	CATER	**473238**
6B8238	CATER	**471255**!
6B9040	CATER	**472015**!
6B9130	CATER	**471787**!
6B9669	CATER	**472185**!
6BD273	IH	**415449**!
6BX6700	FORD	**471787**
6D1707	CATER	455031N=
6EQX4676	FORD	**412119**
6F1011	MTR-C	343185
6F4855	CATER	411
6F5365	CATER	55276=
6F5559	CATER	408
6F5772	CATER	**470712**!
6F848	CATER	**450412**
6H3580	CATER	**411500**
6H3955	CATER	**472164**!
6H399	CATER	**416956**
6H3999	CATER	**416956**
6H7049	CATER	**476470**!
6I0-C1019	REX	**471271**!
6J4169	CATER	710016
6J5232	CATER	**416364**!
6J5234	CASE	J1138
6J5234	CATER	J1138
6J5751	CATER	J1124
6J6553	CATER	710039
6J8578	CATER	455053H=
6K2430	CATER	**416865**!
6K3159	CATER	**417262**!
6K4186	CATER	**416294**!
6K9148	CATER	**415683**
6L2305	CATER	**470687**
6L4237	CATER	**472287**!
6L4944	CATER	**473232**
6L4951	CATER	**473224**!
6L5027	CATER	**471766**!
6L5124	CATER	**470954**!
6M029302	MACK	**471516**!
6MO19303	MACK	**471795**
6MO29302	MACK	**471516**!
6N0403	CATER	481552!
6N8853	CATER	3807
6V1603	CATER	340827
6V1834	CATER	3802*=
6V1916	CATER	**455117**=
6V3365	CATER	**471466**!*
6V3382	CATER	473468
6V3828	CATER	**471466***
6V3988	CATER	**471267**
6V4253	CATER	**471224**!
6V4427	CATER	**471271**!
6V5029	CATER	**330385**!*
6V5038	CATER	447793
6V5038	TMTR	447793
6V5259	CATER	**413246**
6V5607	CATER	**417621**!
6V6838	CATER	**415303**!
6V7196	CATER	**416404**!
6V8146	CATER	200961
6V8407	CATER	495782
6V9748	CATER	**472653**!
6X16X5AN(35)	ISP	6X16X5
6X16X7	SIMRT	6X16X7
6X16X7SC	TRSCM	6X16X7
6X16X7TC	TRSCM	6X16X7
6X176	CATER	**455079***=
6X22X7	FORSH	6X22X7!
6X22X7SC	TRSCM	6X22X7!
6X22X7TC	TRSCM	6X22X7!
6X5221K	JOHND	6575S
7	BL-KN	**416865**!
7-19	TW-CO	**473010**
7-219384	BUC-E	55193=
7-AX302	OLIVE	**471271**!
7-Y1039	KEN	**473215**!
70-1-263	TRMBL	733067
700	UNIVE	**416239**!
700-1-260	TRMBL	370036A
700-1-260	TRMBL	370349A
700-1-260C	TRMBL	733067
700-1-260D	TRMBL	HU013A
700-1-260E	TRMBL	HU009A
700-1-260L	TRMBL	370036A
700-1-260L	TRMBL	370349A
700-1-260T	TRMBL	370036A
700-1-260T	TRMBL	370349A
700-1-261B	TRMBL	AR10+370020A
700-1-261C	TRMBL	730009
700-1-261D	TRMBL	HU019A
7000	C-R	18X30X7!
7000	C-R	221820
7000	C-R	3816
7000753	FORD	**471870**!
700077	CLARK	**416167**!
700120	CLARK	55539=
7001575	FORD	**415458**!
70016	C-R	**416364**!
7002	C-R	1015N
7002	C-R	18X28X6!
70020	C-R	**416364**!
70021	C-R	**416364**!
70025	C-R	**417597**
70026	C-R	**417597**
700263	WHITE	370001A
700267	KOEH	**472164**!
70028	C-R	**417597***
7003	C-R	710222
70030	C-R	**417597**
70030504	FI-AL	**471567**!
70032	C-R	**417597**
70033146	FI-AL	**473238**!
700331462	FI-AL	**473238**!
70034	AM WH	**473449**
70034	C-R	417255
70037676	FI-AL	**472924**!
7004	C-R	221820
70040	C-R	**416239**!
70042641	FI-AL	**471267**
70043570	FI-AL	**450273**
70044120	FI-AL	**474265**
70044741	FI-AL	**471763**
70045	C-R	**416239**!
70048703	FI-AL	**415449**!
70048720	FI-AL	**471785**!
7005	C-R	18X32X7
7005	C-R	18X32X8!
7005	C-R	221830
7005	SPG	6930
70050	C-R	**416239**!
70050420	TROS	370006A
70051	C-R	**416239**!

! Industrial Size/Type * Minor Width Difference

= The U.S. customer service number is 877-4-TIMKEN. The Canadian customer service numbers are 800-565-4927 (English) and 800-565-0438 (French-Canadian).

Mfr. No.	Name	Zero Duplication or Recommended Industrial
70051145	FI-AL	417205!
70052	C-R	416239!
70052115	FI-AL	417247!
70052115	FIAT	417247!
70052176	FI-AL	415035
700524	C-R	416666
700524	CABOT	416666
700524	GR-DV	416666
700524M1	C-R	416666
70052641	FI-AL	471267
70052662	FI-AL	240735
70053	C-R	416239!
700532X20	TROS	370006A
70053517	FI-AL	417205!
70053670	FI-AL	417316!
70053927	FI-AL	240733
70054295	FI-AL	411394!
70054815	TROS	416666
70059947	FI-AL	470898
7006	C-R	18X32X7V!
7006	C-R	710156
70060	C-R	416239!
700603002	FI-AL	476838!
70061	C-R	416239!
70064302	FI-AL	473464!
70064302	FI-AL	473464
70066309	FI-AL	476470
70067913	FI-AL	471820
70067914	FI-AL	473214!
70068513	FI-AL	472144!
7007	C-R	710154
7007	JN-MN	416158
70073	CUMMI	417486
70074961	FI-AL	412040
70074962	FI-AL	470898!
70075767	FI-AL	470898!
70075978	FI-AL	471276
70078329	FI-AL	471689!
70078593	FI-AL	416167!
70079	C-R	416239!*
70079276	FI-AL	6703S
70080	C-R	416239!*
70082179	FI-AL	200640
70084	C-R	416239!
70085	C-R	416239!*
700850	MICH	416239!
700850	UNIVE	416239!
700879	WHITE	HU034A
7008A	C-R	417356!
7008A	C-R	455188
7009	C-R	18X32X7
7009	C-R	18X32X8!
7009	C-R	221830
70090655	FI-AL	471224!
70096	C-R	417564
70096761	FI-AL	472164!
70097	C-R	417564
70099	C-R	415876
700E524	C-R	416666*
700W52-L	C-R	7378
7010	C-R	331173
7010513A	HARWA	70X105X13
70107	CUMMI	471765
701077	WILYS	50402
701115M1	MASSE	50266
701119	WILYS	5778
7011LA	JN-MN	474254
7011LUP	JN-MN	474254
7012	C-R	221820
7012	JN-MN	370037A
7012	JN-MN	370338A
701224	GMC	370019A
701225	GMC	370021A
701226	ACDEL	370005A
701226	GMC	370005A
701241A	ALLCH	471442!
701241A	WAUKE	471442!
7013	C-R	1015N
7013	JN-MN	370036A
7013	JN-MN	370349A
70140408	FI-AL	470530!
701463-1	SPICE	415991
701463-1	SPICE	455146!
701463-2	SPICE	417366!
7014LA	JN-MN	455032!
7015	C-R	18X35X7
7015LA	JN-MN	455022
7016	C-R	18X35X7
70164368	FI-AL	327303!
701663	GMC	730026
701679	GMC	370005A
70169	CUMMI	473016!
7016SS	JN-MN	350364
70171	C-R	JV701
70173735	FI-AL	415991
70179177	FI-AL	455655!
70179643	FI-AL	415023
70179737	FI-AL	352541
7018	C-R	1015N
70180597	FI-AL	415027=
70180612	FI-AL	415683
70181937	FI-AL	416865!
70194679	FI-AL	476424N
70196297	FI-AL	256616*=
70196298	FI-AL	415142
70196495	FI-AL	416339
70196496	FI-AL	415867
70198477	FI-AL	416282
70198578	FI-AL	415234!
70198908	FI-AL	415725!
701HA516	C-R	7006S
701M6700A1A	FORD	3394
702	UNIVE	416077
7020	C-R	18X28X7V
70218284	FI-AL	415960!
7021S	SPG	415995!
7021S	SPG	415995!
7022	AT SU	473317
7022	SPG	473317
70227679	FI-AL	472299*=
70229966	FI-AL	472185!
7022LA	JN-MN	55199=
7023	C-R	221830
7023	JN-MN	370065A
7023	JN-MN	376590A
70234013	FI-AL	473245!
70235312	FI-AL	417344!
70236065	FI-AL	471766!
70241139	FI-AL	254287!
70241779	FI-AL	471192=
70241D	IH	471192
70242D	IH	472439
70243D	IH	473467
70244961	FI-AL	473215!
70246926	FI-AL	472258
70247100	FI-AL	200118=
70250849	FI-AL	JV1582=
70250857	FI-AL	200851
70258D	IH	473238
70259D	IH	470059
70259D	IH	470380!
7025A	C-R	55539=
7027LA	JN-MN	415082*
7028	C-R	18X35X8V
7028VGO	SPG	471554
7029	SPG	370004A
702VB7	MARI	416239!
703078	GMC	416273*
70313	CONCA	472572!
7031LUP	JN-MN	474265
7031S	SPG	473234!
7032LA	JN-MN	471705!
7032S	NATL	410059
7032S	NATL	470380!
7032S	SPG	410059
7032S	SPG	470380!
70337	ALLCH	481163!
7033LA	JN-MN	470625!
7033LUP	JN-MN	470625!
7034LA	JN-MN	470954!
703591	FORD	323138!
7036R	JN-MN	456105
7037S	SPG	9613S
7037SS	JN-MN	350435
7038S	SPG	473234
703D6	DIA	5406
703D6	WHITE	5406
703VB7	MARI	415116
704	UNIVE	415116
70401179	FI-AL	472016!
7040LA	JN-MN	472157!
7040LA	JN-MN	472157
7040LUP	JN-MN	472157
7040LUP	JN-MN	472157!
7041S	SPG	370012A
7042LPD	JN-MN	417262!
7042LUP	JN-MN	417262!
7042S	NATL	416892!
70430-16A	KRSE	471870!
7043014A	KRSE	471765!
704303	GMC	370057A
7044139	FT-WA	473237!
7044A	C-R	472287!
7044N	SPG	7044NA
70462H	IH	472311!
704636	CLARK	455005
70463H	IH	323138!
70464H	IH	474278!
70465H	IH	474276!
70466H	IH	450400
7047LA	JN-MN	473224!
704813	FORD	473234
704862	UNIVE	416077
704863	MICH	416077
7048LPD	JN-MN	473233!
704925	GMC	370003A
704VB7	MARI	415116
70506	AM WH	472397!
705216	GMC	473179
70522	CUMMI	417621
705339C1	IH	416071
705362C1	IH	415023
705399C1	IH	416071
7054LUP	JN-MN	470712!
705762	GMC	370057A
7057S	NATL	3103!
7057S	SPG	3103!
7059A	C-R	417211!
705VB7	MARI	415551
7060	C-R	18X37X8
70603007	FI-AL	471795
70603010	FI-AL	471649*=
70603462	FI-AL	473016!
70604973	FI-AL	416888!
70605093	FI-AL	450311
70611761	FI-AL	415035
70611763	FI-AL	415254
70611765	FI-AL	415035!
70611765	FI-AL	415035
706153	GMC	481181!
706155	GMC	410496=
706165	WILYS	416738!
706165	WILYS	450096
70618662	FI-AL	470954!
70619888	FI-AL	472179
70619890	FI-AL	416891!
70619900	FI-AL	471138!
7062	GARLK	240736
70620784	FI-AL	473010
70620871	FI-AL	473231!
70623823	FI-AL	472636!
70624650	FI-AL	451817
70624653	FI-AL	411376!
70628274	FI-AL	411452=
70628357	FI-AL	415991
70628357	FI-AL	415991!
70628485	FI-AL	415302
70628724	FI-AL	411452*=
70628823	FI-AL	472636!
70628894	FI-AL	415379
70628940	FI-AL	476470!
70628940	FI-AL	476470
70628941	FI-AL	415449!
70629040	FI-AL	417316!
70629733	FI-AL	411178=
70632589	FI-AL	J1044=
70632608	FI-AL	471413
70632611	FI-AL	416287N=
70633630	FI-AL	473464!
70633630	FI-AL	473464
70634005	FI-AL	471765!
70634037	FI-AL	417344!
70634519	FI-AL	417269!
70635778	FI-AL	415995!
70643560	FI-AL	471267!
706463-1	SPICE	476470
70648620	FI-AL	416345!
70648620	FI-AL	455033
70649266	FI-AL	415995!
7064S	NATL	472354!
70650577	FI-AL	471529
70650760	FI-AL	471271*=
70651299	FI-AL	415483
70652662	FI-AL	240735
70654805	FI-AL	417355!
7065480501	FI-AL	417355!
70655619	FI-AL	471192=
70657582	FI-AL	416921!
70658114	FI-AL	415449
70658942	FI-AL	476470!
70664412	FI-AL	471507N=
70668033	FI-AL	340771
70669846	FI-AL	413246
70669847	FI-AL	471529
70670186	FI-AL	417349
70672497	FI-AL	455107N=
70673983	FI-AL	415349*=
70675473	FI-AL	410930=
70676141	FI-AL	JX1190
706765	GMC	370030A
70677188	FI-AL	471787!
70680622	FI-AL	470596
70684806	FI-AL	416364=
70684807	FI-AL	J1278*=
70686015	FI-AL	2699*=
70693957	FI-AL	416287V*=
70695203	FI-AL	486985V=
70695217	FI-AL	486923V=

! Industrial Size/Type * Minor Width Difference

= The U.S. customer service number is 877-4-TIMKEN. The Canadian customer service numbers are 800-565-4927 (English) and 800-565-0438 (French-Canadian).

Mfr. No.	Name	Zero Duplication or Recommended Industrial
70695225	*FI-AL*	487250V!
70696317	*FI-AL*	**415234**!
70699928	*FI-AL*	**471271**!
706VB7	*MARI*	**471224**!
7070	*C-R*	18X38X7
70703	*ALLCH*	240319
707237	*WILYS*	340797
70735242	*FI-AL*	**415196**=
7073553	*ELGIN*	370048A
7073LA	*JN-MN*	**473231**
7073LUP	*JN-MN*	**473231**
707414	*WILYS*	**474278**!
7074R	*JN-MN*	**417211**!
707533-6	*IH*	J1128
70761	*CUMMI*	**470954**!
7076270	*WHITE*	370001A
707821	*WILYS*	**471827**
707943	*MIXMO*	**474278**!
707963	*MIXMO*	6597S
707973	*WILYS*	**472560N**!
7079LA	*JN-MN*	**470954**!
707VB7	*MARI*	**455121**
708	*UNIVE*	**415551**
7080	*C-R*	18X40X7
70805	*C-R*	180X210X15
7081	*C-R*	18X40X7V
7082	*C-R*	18X40X7
70826TA	*TRSCM*	**417597**
70842	*CUMMI*	411
708463-1	*SPICE*	**473215**!
708510	*GMC*	**413470**
708511	*GMC*	**413246**
708551	*MIXMO*	5751
708556	*MIXMO*	**471192**
70855610	*TROS*	**416476**!
708558	*MIXMO*	**450084**!
708559	*MIXMO*	**473215**!
708566	*MIXMO*	**473467**
70856TA	*TRSCM*	**416239**!
708573	*MIXMO*	**474274**
708575	*MIXMO*	**410308**!
708583	*MIXMO*	**352541**
708590	*MIXMO*	**415041**
708600	*MIXMO*	**415483**!
708606	*MIXMO*	**415437**
708612	*MIXMO*	450177
708643	*GMC*	**416297**
708725	*GMC*	**471267**!
708790	*GMC*	**418028**
708790	*GMC*	455137!
7087A	*C-R*	**471255**!
7087R	*JN-MN*	**415219**
708875	*MICH*	**415116**
708875	*UNIVE*	**415116**
7089	*C-R*	710412
70894	*CUMMI*	**472164**
709204	*AVCO*	**473204**=
70927023	*FI-AL*	**473459**
70927283	*FI-AL*	**417474**
70928058	*FI-AL*	**417247**!
70928436	*FI-AL*	**415854**
709446	*MIXMO*	**417967**!
7097A	*C-R*	**473444**
709840C1	*IH*	**417172**
709928	*GMC*	**471570**!
709VB7	*GR-DV*	**416364**!
70HM6700A1A	*FORD*	2012V
70X100X10ASN	*ISP*	70X100X10
70X100X13SC	*TRSCM*	70X100X13
70X100X13TC	*TRSCM*	70X100X13
70X105X13	*SIMRT*	70X105X13
70X105X13AN	*ISP*	70X105X13
70X105X13AN	*ISP*	70X105X7*
70X110X10AN	*ISP*	70X110X10
70X85X8SC	*TRSCM*	70X85X8
70X85X8TC	*TRSCM*	70X85X8
70X88X12SC	*TRSCM*	70X88X12
70X88X12TC	*TRSCM*	70X88X12
70X88X8SC	*TRSCM*	70X88X8!
70X88X8TC	*TRSCM*	70X88X8!
70X90X10	*ISP*	70X90X7*
70X90X10SC	*TRSCM*	70X90X10!
70X90X10TC	*TRSCM*	70X90X10!
70X92X12SC	*TRSCM*	70X92X12
70X92X12TC	*TRSCM*	70X92X12
70X95X10SC	*TRSCM*	70X95X10
70X95X10TC	*TRSCM*	70X95X10
70X95X13SC	*TRSCM*	70X95X13
70X95X13TC	*TRSCM*	70X95X13
71	*WGEAR*	**415984**!
71-0008	*MCCOR*	408
71-0014	*MCCOR*	414
71-0020	*MCCOR*	420
71-0021	*MCCOR*	421
71-0022	*MCCOR*	422
71-0024	*MCCOR*	424
71-0025	*MCCOR*	425RR
71-0027	*MCCOR*	427RR
71-0028	*MCCOR*	428RR
71-0029	*MCCOR*	429RR
710	*UNIVE*	**417598**
710001	*NATL*	710800
710002	*NATL*	710925
710003	*NATL*	711000
710004	*NATL*	711200
710009	*CLARK*	**416154**!
710033	*NATL*	710027
71003344	*FI-AL*	415145N=
71004911	*FI-AL*	**471267**!
710050	*NATL*	712011
71005117	*FI-AL*	**412861**
710054	*NATL*	3622
710055	*TW-CO*	**472164**!
710063	*NATL*	4143
710064	*NATL*	225220
71006864	*FI-AL*	**415196**=
710071000	*JA-HE*	**416666**
71010409	*FI-AL*	456967N=
710148	*WILYS*	**416738**!
710148	*WILYS*	450096
710358	*NATL*	**473231**
710360	*GMC*	370019A
710463-1	*SPICE*	**472636**!
710536	*GMC*	**418028**
710695	*CLARK*	**455026**
7107	*SPG*	7107A=
7107LA	*JN-MN*	**415066***
710802	*CLARK*	**416888**!
710805	*CLARK*	**415437**
710805	*CLARK*	**415437**!
7108LA	*JN-MN*	55224=
710939	*WILYS*	**416738**!
710939	*WILYS*	450096
710983	*CLARK*	**416865**!
710984	*CLARK*	**417134**
710985	*CLARK*	**415150**!
7109LA	*JN-MN*	40769S
71102	*AM WH*	**474264**
711035	*WOOL*	**416865**!
7110LA	*JN-MN*	**415458**!
7110LUP	*JN-MN*	**415458**!
7112	*FULLE*	471686
7112LA	*JN-MN*	**415645**!
7112LA	*JN-MN*	455104
7112LUP	*JN-MN*	**415645**!
7113LA	*JN-MN*	**416891**!
71143453	*FI-AL*	**471341***=
711535	*SPERY*	**473239**!
711664	*WILYS*	6489
711669	*WILYS*	6489
7116LA	*JN-MN*	**471224**!
7116LUP	*JN-MN*	**471224**!
711780HB	*IH*	**472185**!
711818	*C-R*	722108
711822	*C-R*	710044
712	*UNIVE*	**455406**!
712045	*MIXMO*	**473459**
7122	*C-R*	50405
712397	*GMC*	**473464**
712397	*GMC*	**473464**!
7124	*C-R*	**470506**!
71245	*C-R*	**416077**
7125	*C-R*	**470506**!
71250	*C-R*	**416077**
71251	*C-R*	**416077**
7126	*C-R*	**470506**!
712831	*GMC*	**417506**
712832	*GMC*	370012A
712833	*GMC*	**418028**
712834	*GMC*	**417505**
712887	*UNIVE*	**455117**
7128LA	*JN-MN*	**417316**!
7128LUP	*JN-MN*	**417316**!
712998	*GMC*	5188!
712999	*GMC*	5189
7129S	*SPG*	6575S
7130	*C-R*	**470506**!
7130LA	*JN-MN*	**415036**
7131	*C-R*	**470506**!
7131R	*JN-MN*	**470898**
713250	*NATL*	5609
713256	*WHITE*	**474278**!
713273	*WHITE*	5406
713290	*WHITE*	**412119**
713416	*C-R*	55539=
713463-1	*SPICE*	**472179**
713518	*C-R*	55358=
713528	*BUC-E*	**416476**!
713528	*C-R*	**416476**!
713528	*GR-DV*	55078S
713528	*MINMA*	**416476**!
713528M1	*C-R*	**416476**!
71364	*C-R*	**455330**!
71364M1	*C-R*	**455330**!
713750	*NATL*	2377
713777	*SPICE*	J1063=
7138A	*C-R*	**471442**!
71390	*VICK*	**471821**!
713938	*WHITE*	**472636**!
713B528	*C-R*	**416476**!
713BMM528	*C-R*	**416476**!*
714	*UNIVE*	**455121**
71406	*BOSTN*	450536
71406	*BOSTN*	**471535**!
714260	*GMC*	**470712**!
714400	*GMC*	222510
714400	*GMC*	25X35X7!
7144A	*C-R*	**473016**!
7144LPD	*JN-MN*	**417539**!*
714550	*WHITE*	**471554**!
714558	*NATL*	4795V
714559	*NATL*	4795V
714579C1	*IH*	JX1190
714599	*WHITE*	**417484**!
7145LPD	*JN-MN*	**416892**!*
7145LUP	*JN-MN*	**416892**!
7146	*C-R*	50026*
7146310	*SPICE*	**412473**!
7146311	*SPICE*	**415995**!
7146312	*SPICE*	**457291**=
7146313	*SPICE*	**472164**!
7146314	*SPICE*	**412473**!
7146315	*SPICE*	**417171**!
7146317	*SPICE*	**471267**!
7146319	*SPICE*	**471646**!
714632	*SPICE*	**415995**!
7146325	*SPICE*	**415995**!
7146326-1	*SPICE*	**473242**=
714634	*SPICE*	**417171**!
714635	*SPICE*	415137!
714635	*SPICE*	**418028**
714636	*SPICE*	**417171**!
714637	*SPICE*	**418028**
714637	*SPICE*	455137!
714639	*SPICE*	470059
714639	*SPICE*	**470380**!
7146LPD	*JN-MN*	**415379**
7146LPD	*JN-MN*	**415379**!
7146LUP	*JN-MN*	**415379**!
7146LUP	*JN-MN*	**415379**
714702	*WHITE*	370036A
714702	*WHITE*	370349A
71489	*C-P*	**330385**
715000	*NATL*	39801
7151	*C-R*	50026*
71524C91	*IH*	**416380**!
715506	*GMC*	370015A
71558	*CROWN*	**472311**!
7156	*C-R*	50026
7157	*C-R*	50026
715707	*WHITE*	**470530**!
715767	*WHITE*	**470530**!
7158RPD	*JN-MN*	**471466**!
71597C91	*IH*	**452222**!
7160	*ALLCH*	**472924**!
7160	*C-R*	240027=
7160	*TRAC*	**472924**!
7165RPD	*JN-MN*	**415066**
716689	*WHITE*	**476470**!
716689	*WHITE*	**476470**
7166RPD	*JN-MN*	**415036**
716761	*WHITE*	415060
716761	*WHITE*	455060
716888	*WHITE*	**416654**!
71690	*ALLCH*	40438S
716900	*UNIVE*	**415551**
716901	*MICH*	**415551**
71696C1	*IH*	**415458**!
71697C1	*IH*	**473467**
71700	*ALLCH*	45013S
717003	*NATL*	**417967**!
71719C1	*IH*	**471835**!
717410	*WHITE*	**415991**
717410	*WHITE*	**415991**!
717703	*WHITE*	**476470**!
717703	*WHITE*	**476470**
7179S	*SPG*	**418028**
7180LPD	*JN-MN*	**415482**
7180LUP	*JN-MN*	**415482**
718130	*WHITE*	**410308**!
718170	*WHITE*	**415085**!
718170	*WHITE*	456648
718214	*WHITE*	**410987**!
718302	*WHITE*	**450065**
71855C1	*IH*	**416921**!
718657	*WHITE*	**415697**!
718657	*WHITE*	455547
7186LPD	*JN-MN*	**416107**!

! Industrial Size/Type * Minor Width Difference

= The U.S. customer service number is 877-4-TIMKEN. The Canadian customer service numbers are 800-565-4927 (English) and 800-565-0438 (French-Canadian).

Mfr. No.	Name	Zero Duplication or Recommended Industrial
7186LPD	*JN-MN*	455073
7186LUP	*JN-MN*	**416107**!
7186LUP	*JN-MN*	455073
718770	*WHITE*	**410737**!
718773	*WHITE*	**470565**!
7187LPD	*JN-MN*	**472157**
7187LPD	*JN-MN*	**472157**!
7187LUP	*JN-MN*	**472157**!
7187LUP	*JN-MN*	**472157**
71884A	*MC-CL*	**470954**!
718895	*SPERY*	**415035**=
719021	*C-R*	357
7190LPD	*JN-MN*	**476470**
7190LUP	*JN-MN*	**476470**
71910C1	*IH*	**473010**!
71915	*VICK*	**417316**!
7191LPD	*JN-MN*	**416892**!*
7192	*ALLCH*	**471692**!
7192	*TRAC*	**471692**!
7192LPD	*JN-MN*	**417520***
719373	*GMC*	**411330**!
719374	*GMC*	**472636**!
7193LPD	*JN-MN*	**417554**!
7193LUP	*JN-MN*	**417554**!
719463-1	*SPICE*	**473460**
71947	*ALLCH*	**416339**
71947	*ALLCH*	455031!
7194LPD	*JN-MN*	**455480**!*
7195LPD	*JN-MN*	**415036***
7195LUP	*JN-MN*	**415036**
7199LPD	*JN-MN*	**415035**
7199LPD	*JN-MN*	**415035**!
7199LUP	*JN-MN*	**415035**
7199LUP	*JN-MN*	**415035**!
71A7016	*GARLK*	**471472**=
71A7021	*GARLK*	351487
71A7023	*GARLK*	240009*
71A7032	*GARLK*	**470954***
71A7033	*GARLK*	**470954**
71A7034	*GARLK*	**471554**
71A7045	*GARLK*	417267
71A7052	*GARLK*	**471224***
71A7055	*GARLK*	**471689**
71A7080	*GARLK*	42352S
71A7082	*GARLK*	40494S
71B2	*WHITE*	**471316**
71WG7048AA	*FORD*	2503
71WG7048AA	*FORD*	2503N
71WG7657AA	*FORD*	2443
71WG7657BA	*FORD*	2551
71X5239	*GARLK*	**471413**
71X6069	*GARLK*	8792S
71X6133	*GARLK*	**254287**
71X6156	*GARLK*	**471270**!
71X6284	*GARLK*	341022
71X6304	*GARLK*	310841
71X7007	*GARLK*	240470
71X7011	*GARLK*	342805
71X7012	*GARLK*	342805
71X7013	*GARLK*	8792S
71X7020	*GARLK*	340387
71X7021	*GARLK*	340724!
71X7023	*GARLK*	**471466**
71X7024	*GARLK*	351487
71X7033	*GARLK*	**470954**!
71X7034	*GARLK*	**471554**
71X7055	*GARLK*	**471689**
71X7080	*GARLK*	340400
71X7090	*GARLK*	442110=
71X7093	*GARLK*	310841
71X8000	*GARLK*	7014S
72-0002	*MCCOR*	13069
72-063350	*BUC-E*	441130
72-063400	*BUC-E*	**471224**
72-06340N	*BUC-E*	**471224**
72-063415	*BUC-E*	**471224**!
72-063550	*BUC-E*	**472560N**
72-063600	*BUC-E*	**473380**
72-06385	*BUC-E*	**471689**!
72-063850	*BUC-E*	**471689**!
72-064350	*BUC-E*	**472258**!
72-064500	*BUC-E*	240319
72-06471	*NORDG*	**416706**!
72-064980	*BUC-E*	42352S
72-065660	*BUC-E*	**473215**!
72-066000	*BUC-E*	6966S
72-06650V	*BUC-E*	**473228**!
72-066550	*BUC-E*	**473228**!
72-06925	*BUC-E*	40401
72-069250	*BUC-E*	40401
72-071500	*BUC-E*	4148
72-071500	*BUC-E*	**471424**!
72-071800	*BUC-E*	40360S!
72-072450	*BUC-E*	**472924**!
72-07600V	*BUTBN*	40337S
72-076100	*BUC-E*	40316S
72-076350	*BUC-E*	**416271**!
72-076390	*BUC-E*	**415001**!
72-076900	*BUC-E*	**415995**!
72-077000	*BUC-E*	**416921**!
72-077210	*BUC-E*	45013S
72-077550	*BUC-E*	5971
72-077570	*BUC-E*	**412473**!
72-077710	*BUC-E*	345146
72-077720	*BUC-E*	**415991**
72-077720	*BUC-E*	455146!
72-078050	*BUC-E*	**415437**
72-078190	*BUC-E*	345035
72-078200	*BUC-E*	**416339**
72-078200	*BUC-E*	455031!
72-078360	*BUC-E*	**455189**
72-080325	*BUC-E*	**415072**
72-080328	*BUC-E*	**415072**
72-080342	*BUC-E*	**455583N**!
72-080825	*BUC-E*	**417597**
72-082500	*BUC-E*	**417602**!
72-08250M	*BUC-E*	**417602**!
72-082595	*BUC-E*	**415124**
72-08300M	*BUC-E*	**415090**
72-083150	*BUC-E*	**417020**
72-08315M	*BUC-E*	**417020**
72-083650	*BUC-E*	**415482**
72-08365M	*BUC-E*	**415482**
72-085105	*BUC-E*	**417608**
72-089720	*BUC-E*	**472924**!
72-090500	*BUC-E*	**470530**!
72-09050V	*BUC-E*	**470530**!
72-093000	*BUC-E*	**472397**!
72-09300VM	*BUC-E*	**472397**!
72-093500	*BUC-E*	**473463**
72-09350V	*BUC-E*	**473463**
72-095050	*BUC-E*	**417349**
72-09505V	*BUC-E*	**417349**
72-09600	*BUC-E*	**415995**!
72-096000	*BUC-E*	**415995**!
72-096050	*BUC-E*	**415995**!
72-096390	*BUC-E*	**415001**!
72-097380	*BUC-E*	**417351**!
72-09738M	*BUC-E*	**417351**!
72-09857	*BUC-E*	**417487**
72-09900M	*BUC-E*	**417487**
72-100993	*BUC-E*	**455019**!
72-101250	*BUC-E*	**415035**
72-10125M	*BUC-E*	**415035**
72-10125M	*BUC-E*	**415035**!
72-101499	*BUC-E*	**415035**
72-101499	*BUC-E*	**415035**!
72-101500	*BUC-E*	**415035**
72-101500	*BUC-E*	**415035**!
72-101505	*BUC-E*	**415035**
72-101505	*BUC-E*	**415035**!
72-10150VE	*BUC-E*	**415035**
72-10150VE	*BUC-E*	**415035**!
72-104110	*BUC-E*	**417357**
72-104110	*BUC-E*	455192!
72-10412	*BUC-E*	**417357**
72-10412	*BUC-E*	455192!
72-104120	*BUC-E*	**417357**
72-104120	*BUC-E*	455192!
72-10418	*BUC-E*	**415036**
72-104180	*BUC-E*	**415036**
72-105500	*BUC-E*	**415041**
72-10550V	*BUC-E*	**415041**
72-10785M	*BUC-E*	**416865**!
72-10788	*BUC-E*	**472185**!
72-107880	*BUC-E*	**416865**!
72-108250	*BUC-E*	**416865**!
72-10825V	*BUC-E*	**416865**!
72-110525	*BUC-E*	**417262**!
72-112000	*BUC-E*	**330385**!
72-11225M	*BUC-E*	**415072**
72-11250	*BUC-E*	**415072**
72-112500	*BUC-E*	**415072**
72-112501	*BUC-E*	**415072**
72-11250MV	*BUC-E*	**415072**
72-11275V	*BUC-E*	**415072**
72-115950	*BUC-E*	**416364**!
72-11600V	*BUC-E*	**472560N**!
72-116800	*BUC-E*	240731
72-12000V	*BUC-E*	**416239**!
72-120250	*BUC-E*	**416239**!
72-120251	*BUC-E*	**416239**!
72-12025M	*BUC-E*	**416239**!
72-122100	*BUC-E*	**416654**!
72-122300	*BUC-E*	**455194**
72-122430	*BUC-E*	**415725**!
72-122445	*BUC-E*	**471649**!
72-122457	*BUC-E*	**471689**!
72-122600	*BUC-E*	**415449**!
72-122750	*BUC-E*	**472636**!
72-12275M	*BUC-E*	**472636**!
72-125250	*BUC-E*	**417604**
72-125500	*BUC-E*	**417567**
72-12550M	*BUC-E*	**417567**
72-125580	*BUC-E*	455129
72-128500	*BUC-E*	**471466**!
72-134950	*BUC-E*	**417606**
72-135250	*BUC-E*	55224=
72-138385	*BUC-E*	340797
72-13925V	*BUC-E*	**470954**!
72-14333	*BUC-E*	**471267**!
72-143330	*BUC-E*	**471570**!
72-14335M	*BUC-E*	**481644**
72-143381	*BUC-E*	**471413**
72-143390	*BUC-E*	340136
72-143395	*BUC-E*	**470380**!
72-143396	*BUC-E*	**417357**
72-143396	*BUC-E*	455192!
72-143410	*BUC-E*	**472179**
72-143475	*BUC-E*	5458$
72-148500	*BUC-E*	**471570**!
72-14850E	*BUC-E*	**471570**!
72-153500	*BUC-E*	**471270**!
72-15350V	*BUC-E*	**472560N**!
72-153950	*BUC-E*	415656
72-157600	*BUC-E*	**474278**!
72-15760V	*BUC-E*	**474278**!
72-158405	*BUC-E*	40301S
72-159395	*BUC-E*	**470898**
72-159578	*BUC-E*	40520S
72-160365	*BUC-E*	**450412**
72-160537	*BUC-E*	**415303**!
72-160550	*BUC-E*	**416956**
72-160750	*BUC-E*	**471341**!
72-161000	*BUC-E*	**472015**!
72-16100M	*BUC-E*	**472015**!
72-161050	*BUC-E*	**471272**!
72-16500V	*BUC-E*	**473243**
72-17100M	*BUC-E*	**413469**!
72-17115	*BUC-E*	**411253**!
72-171150	*BUC-E*	**411253**!
72-174325	*BUC-E*	**416404**!
72-174326	*BUC-E*	**416404**!
72-174352	*BUC-E*	455024
72-174365	*BUC-E*	**417492**
72-174385	*BUC-E*	**415991**
72-174385	*BUC-E*	455146!
72-174390	*BUC-E*	**415991**
72-174390	*BUC-E*	455146!
72-175746	*BUC-E*	**415498**
72-177145	*BUC-E*	**472636**!
72-177150	*BUC-E*	**415234**!
72-17715V	*BUC-E*	**415234**!
72-177450	*BUC-E*	**417205**!
72-177875	*BUC-E*	45187S
72-178095	*BUC-E*	**415035**
72-178095	*BUC-E*	**415035**!
72-179170	*BUC-E*	**417621**!
72-179175	*BUC-E*	**417621**!
72-179995	*BUC-E*	**415196**!
72-180150	*BUC-E*	**416288**!
72-18015V	*BUC-E*	**416288**!
72-180300	*BUC-E*	**476470**
72-18031	*BUC-E*	**476470**
72-180310	*BUC-E*	**476470**
72-183150	*BUC-E*	**415023**
72-183300	*BUC-E*	**418028**
72-183300	*BUC-E*	455137!
72-183305	*BUC-E*	**416153**!
72-183994	*BUC-E*	**415284**
72-184591	*BUC-E*	**415138**!
72-185450	*BUC-E*	**417298**
72-185760	*BUC-E*	**471553**!
72-18576M	*BUC-E*	**471553**!
72-18600	*BUC-E*	**416107**!
72-18600	*BUC-E*	455073
72-186100	*BUC-E*	**415021**
72-18610M	*BUC-E*	**415021**
72-186250	*BUC-E*	**415023**
72-186280	*BUC-E*	**415295**
72-186300	*BUC-E*	470950!
72-186300	*BUC-E*	6241S
72-18630M	*BUC-E*	470950!
72-18630M	*BUC-E*	6241S
72-186400	*BUC-E*	**474264**
72-18640M	*BUC-E*	**474264**
72-186500	*BUC-E*	**471821**!
72-18650M	*BUC-E*	**471821**!
72-186750	*BUC-E*	**470530**!
72-18675M	*BUC-E*	**470530**!
72-186850	*BUC-E*	470086
72-18685V	*BUC-E*	470086
72-18685VE	*BUC-E*	470086
72-18710M	*BUC-E*	**411253**!
72-187200	*BUC-E*	**412119**!
72-18720M	*BUC-E*	**412119**!
72-187675	*BUC-E*	**417541**
72-18860M	*BUC-E*	**471579**

! Industrial Size/Type * Minor Width Difference $ F-M Number Is Part Of A Kit

= The U.S. customer service number is 877-4-TIMKEN. The Canadian customer service numbers are 800-565-4927 (English) and 800-565-0438 (French-Canadian).

Mfr. No.	Name	Zero Duplication or Recommended Industrial
72-189200	BUC-E	50254=
72-19020V	BUC-E	**470605**!
72-19052	BUC-E	**470565**!
72-190520	BUC-E	**470565**!
72-193640	BUC-E	**415142**
72-193840	BUC-E	55193=
72-193860	BUC-E	**415142**
72-193900	BUC-E	**472157**!
72-193900	BUC-E	**472157**
72-193901	BUC-E	**472157**
72-193901	BUC-E	**472157**!
72-193909	BUC-E	416556!
72-193909	BUC-E	**472157**
72-19390E	BUC-E	**472157**
72-19390E	BUC-E	**472157**!
72-198200	BUC-E	**416654**!
72-19820M	BUC-E	**416654**!
72-198450	BUC-E	**417487**
72-198451	BUC-E	**417487**
72-19845M	BUC-E	**417487**
72-19870M	BUC-E	**416288**!
72-199700	BUC-E	**415072**
72-199701	BUC-E	**415072**
72-199702	BUC-E	**416107**!
72-199702	BUC-E	455073
72-19970M	BUC-E	**415072**
72-199720	BUC-E	**417487**
72-200180	BUC-E	**417298**
72-200180M	BUC-E	**417298**
72-20030V	BUC-E	415871
72-200925	BUC-E	**472157**!
72-200925	BUC-E	**472157**
72-201800	BUC-E	415871
72-20180V	BUC-E	415871
72-20188	BUC-E	55238
72-201880	BUC-E	55238
72-20195	BUC-E	**417198**
72-201950	BUC-E	**417198**
72-201951	BUC-E	**417198**
72-20195EV	BUC-E	**417198**
72-20212	BUC-E	**416706**!
72-202120	BUC-E	**416706**!
72-202141	BUC-E	**55301S**
72-202141M	BUC-E	**55301S**
72-202151	BUC-E	**476470**
72-20234	BUC-E	55524
72-202340	BUC-E	55524
72-202447	BUC-E	**415697**!
72-202447	BUC-E	455547
72-202447M	BUC-E	**415697**!
72-202447M	BUC-E	455547
72-202630	BUC-E	**417433**
72-207300	BUC-E	**471567**!
72-20730V	BUC-E	**471567**!
72-212300	BUC-E	**415984**!
72-21230M	BUC-E	**415984**!
72-212800	BUC-E	**476470**
72-213800	BUC-E	**415379**
72-213800	BUC-E	**415379**!
72-21380M	BUC-E	**476470**
72-21630	BUC-E	**415072**
72-216300	BUC-E	**415072**
72-21630M	BUC-E	**415072**
72-21680V	BUC-E	**415116**
72-21710	BUC-E	**417602**!
72-217100	BUC-E	**417602**!
72-21710M	BUC-E	**417602**!
72-22065	BUC-E	**471267**!
72-220650	BUC-E	417267
72-220750	BUC-E	**470954**
72-22080V	BUC-E	**472354**!
72-22090V	BUC-E	**472560N**
72-22238E	BUC-E	**417262**!
72-222400	BUC-E	**417262**!
72-223370	BUC-E	**417621**!
72-22374	BUC-E	**417350**!
72-224225	BUC-E	**417563**
72-230900	BUC-E	**417546**!
72-23090M	BUC-E	**417546**!
72-230920	BUC-E	**417546**!
72-23290E	BUC-E	**415645**!
72-23290E	BUC-E	455104
72-23295	BUC-E	**415645**!
72-23295	BUC-E	455104
72-23300	BUC-E	**415645**!
72-23300	BUC-E	455104
72-233000	BUC-E	**415645**!
72-233000	BUC-E	455104
72-23300VM	BUC-E	**415645**!
72-23300VM	BUC-E	455104
72-233500	BUC-E	**455584**
72-23600V	BUC-E	**455583N**!
72-237285	BUC-E	**417598**
72-238010	BUC-E	**457874**
72-238600	BUC-E	**417562**
72-23860E	BUC-E	**417562**
72-239815	BUC-E	**417600**
72-240441	BUC-E	**455123**
72-242250	BUC-E	**417603**!
72-24275M	BUC-E	**416077**
72-24300V	BUC-E	**416077**
72-24800	BUC-E	**415116**
72-24800V	BUC-E	**415116**
72-248250	BUC-E	**415116**
72-24825V	BUC-E	**415116**
72-24825VE	BUC-E	**415116**
72-248750	BUC-E	455129
72-25125V	BUC-E	**472354**!
72-253750	BUC-E	**55301S**
72-253800	BUC-E	**415090**
72-25625M	BUC-E	**415023**
72-259985	BUC-E	**417570**
72-26500	BUC-E	**473224**!
72-265000	BUC-E	**473224**!
72-26625	BUC-E	**473016**!
72-266250	BUC-E	**473016**!
72-266250V	BUC-E	**473016**!
72-269250	BUC-E	**473215**!
72-26925M	BUC-E	**473215**!
72-269850	BUC-E	**473231**
72-269900	BUC-E	**473231**
72-272600	BUC-E	**473367**!
72-272600	BUC-E	**473367**
72-27260V	BUC-E	**473367**!
72-27260V	BUC-E	**473367**
72-274250	BUC-E	**473010**
72-274300	BUC-E	**473010**!
72-277600	BUC-E	**472185**!
72-27760M	BUC-E	**472185**!
72-282600	BUC-E	**472179**
72-28260V	BUC-E	**472179**
72-28560	BUC-E	**450273**
72-29075	BUC-E	**414045**!
72-290750	BUC-E	**473238**
72-290850	BUC-E	**473238**
72-292392	BUC-E	**417501**
72-29585V	BUC-E	470086
72-295950	BUC-E	**473461**!
72-29595VE	BUC-E	**473461**!
72-29650	BUC-E	**470565**!
72-296500	BUC-E	**470565**!
72-29795V	BUC-E	**470088**
72-297960	BUC-E	**473462**
72-298250	BUC-E	**411394**!
72-298251	BUC-E	**411394**!
72-29830V	BUC-E	**411500**
72-298950	BUC-E	**410694**!
72-29895V	BUC-E	**410694**!
72-299050	BUC-E	**412871**!
72-29905MV	BUC-E	**412871**!
72-30085	BUC-E	**415449**!
72-300850	BUC-E	**415449**!
72-30195R	BUC-E	**415001**!
72-302050	BUC-E	**417079**
72-302100	BUC-E	**417079**
72-304050	BUC-E	**415458**!
72-30495E	BUC-E	**415458**!
72-305000	BUC-E	**415458**!
72-307900	BUC-E	**417343**!
72-307950	BUC-E	**417316**!
72-307955	BUC-E	46997S
72-30795ME	BUC-E	**417316**!
72-311650	BUC-E	55469
72-31165M	BUC-E	55469
72-312950	BUC-E	**416921**!
72-31295V	BUC-E	**415001**!
72-31300	BUC-E	**416921**!
72-313000	BUC-E	**416921**!
72-31420V	BUC-E	**472560N**!
72-314750	BUTBN	40337S
72-31475V	BUTBN	40337S
72-31530V	BUC-E	**412040**
72-31535V	BUC-E	**471341**!
72-315685	BUC-E	**472164**!
72-315850	BUC-E	**417134**
72-31585M	BUC-E	**417134**
72-31695	BUC-E	**416292**
72-316950	BUC-E	**416292**
72-319950	BUC-E	**412473**!
72-31995V	BUC-E	**412473**!
72-32265	BUC-E	**415991**
72-32265	BUC-E	455146!
72-32287	BUC-E	**415991**
72-32287	BUC-E	455146!
72-322870	BUC-E	**415991**
72-322870	BUC-E	455146!
72-322950	BUC-E	**415379**
72-322950	BUC-E	**415379**!
72-324750	BUC-E	**455249**!
72-325850	BUC-E	**415437**
72-325900	BUC-E	**415437**
72-325900	BUC-E	**415437**!
72-32590V	BUC-E	**415437**
72-32590V	BUC-E	**415437**!
72-325950	BUC-E	**417501**
72-32595E	BUC-E	**417501**
72-326000	BUC-E	**415379**
72-326000	BUC-E	**415379**!
72-32600M	BUC-E	**415379**!
72-32600M	BUC-E	**415379**
72-326900	BUC-E	**417355**!
72-32700	BUC-E	**417967**!
72-327000	BUC-E	**417967**!
72-328950	BUC-E	455024
72-32895M	BUC-E	455024
72-32905M	BUC-E	**455026**
72-32915M	BUC-E	**415027**
72-32915M	BUC-E	**415027**!
72-329250	BUC-E	**416125**!
72-32925EV	BUC-E	**416125**!
72-32935V	BUC-E	**416339**
72-32935V	BUC-E	455031!
72-329400	BUC-E	**416345**!
72-329400	BUC-E	455033
72-329450	BUC-E	**415034**!
72-32945MEV	BUC-E	**415034**!
72-334450	BUC-E	**415150**!
72-33445E	BUC-E	**415150**!
72-334460	BUC-E	**415150**!
72-334550	BUC-E	**455191**
72-33455VE	BUC-E	**455191**
72-334650	BUC-E	**416153**!
72-339540	BUC-E	455197N
72-339550	BUC-E	**415196**!
72-33955E	BUC-E	**415196**!
72-339650	BUC-E	**415196**!
72-339665	BUC-E	**416888**!
72-339700	BUC-E	**416888**!
72-339710	BUC-E	**416888**!
72-344650	BUC-E	**416153**!
72-34465M	BUC-E	**416153**!
72-34LPD	JN-MN	**417269**!
72-35465ME	BUC-E	**415047**
72-354670	BUC-E	**415047**
72-35475E	BUC-E	**416892**!
72-354850	BUC-E	**416892**!
72-35485VE	BUC-E	**416892**!
72-35495	BUC-E	**415371**
72-354950	BUC-E	**415371**
72-35495VE	BUC-E	**415371**
72-359875	BUC-E	**415138**!
72-359940	BUC-E	417526
72-359950	BUC-E	**417247**!
72-35995M	BUC-E	**417247**!
72-360050	BUC-E	**416167**!
72-36005EM	BUC-E	**416167**!
72-360100	BUC-E	**417539**!
72-36010E	BUC-E	**417539**!
72-365050	BUC-E	415060
72-365050	BUC-E	455060
72-36505V	BUC-E	415060
72-36505V	BUC-E	455060
72-365140	BUC-E	415064
72-36520V	BUC-E	456890
72-365228	BUC-E	**417269**!
72-365250	BUC-E	**417273**
72-36525M	BUC-E	**417273**
72-368500	BUC-E	**417254**
72-370200	BUC-E	**415938**
72-37020V	BUC-E	**415938**
72-370300	BUC-E	**415938**
72-37035	BUC-E	**417555**!
72-370350	BUC-E	**417555**!
72-370370	BUC-E	**417555**!
72-375200	BUC-E	**416107**!
72-375200	BUC-E	455073
72-375201	BUC-E	**416107**!
72-375201	BUC-E	455073
72-37520ME	BUC-E	**416107**!
72-37520ME	BUC-E	455073
72-37550EV	BUC-E	**416107**!
72-37550EV	BUC-E	455073
72-37565V	BUC-E	**416107**!
72-37565V	BUC-E	455073
72-37575	BUC-E	**417556**
72-375750	BUC-E	**417556**
72-38225	BUC-E	**416666**
72-382250	BUC-E	**416666**
72-385650	BUC-E	**416476**!
72-38565VM	BUC-E	**416476**!
72-409124	BUC-E	**415327**
72-410650	BUC-E	**416229**
72-41065M	BUC-E	**416229**
72-41090V	BUC-E	**416229**
72-410910	BUC-E	**415327**
72-41405	BUC-E	**417596**
72-415900	BUC-E	**455584**
72-41590V	BUC-E	**455584**

! Industrial Size/Type
= The U.S. customer service number is 877-4-TIMKEN. The Canadian customer service numbers are 800-565-4927 (English) and 800-565-0438 (French-Canadian).

Mfr. No.	Name	Zero Duplication or Recommended Industrial
72-420900	BUC-E	455117
72-420905	BUC-E	455117
72-42090VM	BUC-E	455117
72-42350	BUC-E	415551
72-423500	BUC-E	415551
72-430900	BUC-E	455406!
72-43090V	BUC-E	455406!
72-43590	BUC-E	455121
72-436350	BUC-E	415128
72-632540	BUC-E	412040
72-63254V	BUC-E	412040
72-63269	BUC-E	472492!
72-632690	BUC-E	472492!
72-632750	BUC-E	480491
72-717100	BUC-E	417602!
720004901	EATON	473231!
720004902	EATON	473237!
720004903	EATON	473237!
72000492	EATON	473237!
72000492	Y-T	473237!
72001	VIC	001
72002	VIC	002
72003	VIC	003
72004	SHOV	412871!
72004	VIC	004
72005	VIC	005
72006	VIC	006
72007	VIC	007
72008	VIC	008
72009	VIC	009
7200A	C-R	473238
72010	VIC	010
7201000V	BUC-E	40101S
72011	VIC	011
72012	VIC	012
7201200V	BUC-E	416125!
72013	VIC	013
72014	VIC	014
72014	VIC	431RR
72015	VIC	015
72016	VIC	016
7201600V	BUC-E	472157!
7201600V	BUC-E	472157
72017	VIC	017
72017	VIC	432RR
72018	VIC	018
72018	VIC	433RR
7201800E	BUC-E	415645!
7201800E	BUC-E	455104
72019	VIC	019
72019	VIC	434RR
7201LPD	JN-MN	472636!
7202	C-R	19X27X6
72020	VIC	020
72020	VIC	435RR
72021	VIC	021
72021	VIC	436RR
72022	VIC	022
72023	VIC	023
72023	VIC	437RR
7202300V	BUC-E	415938
7202375	NORDG	471649!
72024	VIC	024
72024	VIC	438RR
72025	VIC	025
72026	VIC	026
72027	VIC	027
72028	VIC	028
7202820	NORDG	470712!
7202850M	BUC-E	417602!
72029	VIC	029
7202930	NORDG	470328
7202930	NORDG	481213!
72030	VIC	030
72031	VIC	031
72031	VIC	439RR
7203195	NORDG	471766!
72032	VIC	032
72033	CHERY	471472!
72034	VIC	034
7203400EV	BUC-E	415871
72035	VIC	035
72036A	HERCU	412119
720387	PEERC	471765!
72039	VIC	039
72040	VIC	040
7204003	NORDG	455308
72042	VIC	042
72042537	BUC-E	471984
72043	VIC	043
72044	CHERY	471567!
720463-1	SPICE	412871!
7204710	NORDG	472193!
72048	CHERY	471689!
7205	C-R	19X30X7
7205	C-R	221920
7206150	NORDG	411245!
720618	GMC	370002A
7206271	NORDG	416706!
7206274	NORDG	415988
72064525	BUC-E	473227
720658	GMC	HU009A
720659	GMC	386025A
720659	GMC	416158
7208LPD	JN-MN	415327
7208LUP	JN-MN	415327
7208XBO	SPG	7208S
720912	UNIVE	417598
720913	MICH	417598
7210	C-R	19X32X8!
7210	C-R	221922
721002	ADAMS	410496!
721003	ADAMS	472157!
721003	ADAMS	472157
72110	VIC	110
72110	VIC	408
72111	VIC	111
72111250	BUC-E	471466!
72112	VIC	112
72113	VIC	113
72113	VIC	411
72114	VIC	114
72114	VIC	412
72115	VIC	115
72116	VIC	116
72116	VIC	414
72116250	BUC-E	470954!
72117	VIC	117
72117	VIC	440RR
72118	VIC	118
72118	VIC	441RR
72119	VIC	119
72119	VIC	442RR
72120	VIC	120
72121	VIC	121
72122	VIC	122
72122	VIC	443RR
72123	VIC	123
72124	VIC	124
72125	VIC	125
72126	VIC	126
72127	VIC	127
72127	VIC	444RR
72128	VIC	128
7212850V	BUC-E	471466!
72129	VIC	129
72130	VIC	130
7213094	GIB	455328
72131	VIC	131
72132	VIC	132
72133	VIC	133
72133	VIC	445RR
72134	VIC	134
72134	VIC	446RR
72136	VIC	136
72137	VIC	137
72138	VIC	138
72139	VIC	139
72140	VIC	140
721403	ADAMS	471267!
721403	WABCO	471267!
72141	VIC	141
72142	VIC	142
72143	VIC	143
72144	VIC	144
72146	VIC	146
72146	VIC	447RR
72148	VIC	148
72149	VIC	149
72149A	HERCU	415995!
7215	NATL	5126
72151	VIC	151
72152	VIC	152
72152	VIC	448RR
72153	VIC	153
7215LPD	JN-MN	471651
7215LUP	JN-MN	471651
7216LPD	JN-MN	473224!
7216LUP	JN-MN	473224!
72179150	BUC-E	55155=
7217915M	BUC-E	55155=
721797	WABCO	471766!
7218030M	BUC-E	476470
7218330VE	BUC-E	418028
7218330VE	BUC-E	455137!
7218575M	BUC-E	471787!
721871	ADAMS	473205
721871	LETN	473205
721871	WABCO	473205
721872	ADAMS	471689!
721872	LETN	471689!
72187900	BUC-E	471765!
72188450	BUC-E	6863S!
7218845M	BUC-E	6863S!
72188600	BUC-E	471579
7218920V	BUC-E	50254=
72193855	BUC-E	455134!
7220	C-R	19X35X10!
7220	C-R	710273
7220	C-R	710445*
7220263	BUC-E	417433
722050	WABCO	417433!
722051	ADAMS	417210!
722051	LETN	417210!
722051	WABCO	417210!
72206800	BUC-E	471466!
7220680V	BUC-E	471466!
72210	VIC	210
722106	ADAMS	417344!
722106	LETN	417344!
72211	VIC	211
72212	VIC	212
72213	VIC	213
72213	VIC	70484-1
72214	VIC	214
72214	VIC	70800
72215	VIC	215
72215	VIC	420
72216	VIC	216
72216	VIC	421
72217	VIC	217
72217	VIC	422
72218	VIC	218
72219	VIC	219
72219	VIC	424
72220	VIC	220
72220	VIC	425RR
72221	VIC	221
72222	VIC	222
72222	VIC	427RR
72223	VIC	223
72223	VIC	449RR
72223460	BUC-E	410752
72224	VIC	224
72224	VIC	450RR
72225	VIC	225
72225	VIC	35224
72226	VIC	226
722276	ADAMS	416404!
722276	LETN	416404!
722276	WABCO	416404!
72228	VIC	228
72228	VIC	451RR
72229	VIC	229
7223	C-R	710273
72230	VIC	230
72230	VIC	452RR
722309	WOOL	417159
72231	VIC	231
72231	VIC	453RR
72232	VIC	232
72232	VIC	454RR
72234	VIC	234
72235	VIC	235
72236	VIC	236
72238	VIC	238
72238	VIC	455RR
72239	VIC	239
722392	LETN	456305
722392	WABCO	456305
7223S	SPG	471344
72242	VIC	242
72242	VIC	456RR
722463-1	SPICE	455576!
722463-2	SPICE	417602!
72248	VIC	248
72249	VIC	249
72252	VIC	252
7226125M	BUC-E	415227!
72261260	BUC-E	55228=
72265	VIC	265
72266100	BUC-E	450400
72268100	BUC-E	470059
72268100	BUC-E	470380!
7226885	NORDG	473227!
72269750	BUC-E	470059
72269750	BUC-E	470380!
7226975E	BUC-E	470059
7226975E	BUC-E	470380!
72272250	BUC-E	50254=
7227225V	BUC-E	50254=
7227235E	BUC-E	50254=
7227810	BUC-E	470059
7227810	BUC-E	470380!
7227LPD	JN-MN	456105*
7227LUP	JN-MN	456105
72282550	BUC-E	474274
7229	TEKNI	471466!

! Industrial Size/Type * Minor Width Difference

= The U.S. customer service number is 877-4-TIMKEN. The Canadian customer service numbers are 800-565-4927 (English) and 800-565-0438 (French-Canadian).

Mfr. No.	Name	Zero Duplication or Recommended Industrial
72292H	*WAUKE*	**471821**!
7230	*C-R*	221925
72325	*VIC*	325
72325	*VIC*	428RR
72326	*VIC*	326
72326	*VIC*	429RR
72326006	*BUC-E*	455178=
72327	*VIC*	327
72329	*VIC*	329
72329	*VIC*	457RR
72330	*VIC*	330
72331	*VIC*	331
72332	*VIC*	332
72333	*VIC*	333
72333	*VIC*	458RR
72334	*VIC*	334
72335	*VIC*	335
72335	*VIC*	459RR
72336	*VIC*	336
72337	*VIC*	337
72340	*VIC*	340
72342	*VIC*	342
72343	*VIC*	343
72345	*VIC*	345
723463-1	*SPICE*	**473243**
7236RPD	*JN-MN*	55218=
7237A	*C-R*	450536
7237A	*C-R*	**471535**!
72388345	*BUC-E*	55692=
723K1	*WHITE*	**480630**!
7240	*C-R*	19X37X7
7240	*CHERY*	**473213**!
7241	*CHERY*	**473215**!
7242	*CHERY*	**417316**!
7242	*SPG*	42763
72426	*VIC*	426
7243	*SPG*	40769S
72433	*VIC*	433
7244	*SPG*	40185
72443	*VIC*	443
724445	*GMC*	**471570**!
72446	*VIC*	446
724510	*GMC*	1012
724510	*GMC*	1012N
724510	*GMC*	45X62X8!
724511	*GMC*	33X50X12!
724513	*GMC*	33X50X12!
724571	*ADAMS*	**412473**!
724571	*LETN*	**412473**!
724633	*SPICE*	**417487**
724860	*ADAMS*	**470565**!
724860	*LETN*	**470565**!
724925	*UNIVE*	**455406**!
724926	*MICH*	**455406**!
7250	*C-R*	19X38X7
72502	*VIC*	OK311
72503	*VIC*	OK312
7251	*C-R*	710154
725147	*ADAMS*	**415449**!
72515	*C-R*	**416044**
725157	*ADAMS*	**417316**!
725157	*LETN*	**417316**!
725157	*WABCO*	**417316**!
72539	*C-R*	**415116***
72540	*C-R*	**415116**
72541	*C-R*	**415116**
72541	*CLIN*	**254270**
725422	*ADAMS*	**412920**!
725422	*WABCO*	**411376**!
725550	*ADAMS*	**474279N**
725550	*LETN*	**474279N**
725550	*WABCO*	**474279N**
725550917-473-A	*BENDI*	**474279N**
725551	*LETN*	481534
725581	*ADAMS*	**471766**!
725581	*LETN*	**471766**!
725581	*WABCO*	**471766**!
72558R91	*IH*	5403
72562R91	*IH*	5403
7260	*C-R*	19X40X10
72600	*VIC*	6003020
72601	*VIC*	6004020
72602	*VIC*	6005020
72603	*VIC*	6006020
72604	*VIC*	6007020
72605	*VIC*	6008020
72606	*VIC*	6010020
72607	*VIC*	6010025
72608	*VIC*	6011025
72609	*VIC*	6012025
72610	*VIC*	6014025
72611	*VIC*	6016025
72612	*VIC*	6017025
72613	*VIC*	6019025
72614	*VIC*	6019030
72615	*VIC*	6020030
72616	*VIC*	6022030
72617	*VIC*	6024030
72618	*VIC*	6025030
72619	*VIC*	6027030
72620	*VIC*	6028030
72621	*VIC*	6030030
72621A	*HEIL*	**470954**
72621A	*HERCU*	**470954**
72622	*VIC*	6032030
72623	*VIC*	6033030
72624	*VIC*	6035030
72625	*VIC*	6036030
72626	*VIC*	6038030
72627	*VIC*	6038040
72628	*VIC*	6041040
72629	*VIC*	6044040
726929	*WILYS*	**451948**
72695A	*HERCU*	240119
727026	*WILYS*	**416919**
72708	*C-P*	**471281**!
72708	*GE*	**471281**!
7272	*TEKNI*	**471619**!
727345	*WABCO*	**471649**!
72737	*ALLCH*	**417555**!
727463-1	*SPICE*	**470565**!
7274633	*SPICE*	**471341**!
7275	*C-R*	19X46X7
727584	*WABCO*	**415187**
727695	*LETN*	**471224**!
727695	*WABCO*	**471224**!
727739	*LETN*	**417350**!
727739	*WABCO*	**417350**!
7280	*C-R*	19X47X7
72813	*C-R*	185X210X13
728143	*LETN*	**471413**!
728143	*WABCO*	**471413**!
7284112	*HUB-C*	**473197**
728463-2	*SPICE*	**416107**!
728463-2	*SPICE*	455073
728491	*LETN*	**471649**!
728491	*WABCO*	**471649**!
728500	*ADAMS*	**415082**
728500	*LETN*	**415082**
728500	*WABCO*	**415082**
728664	*LETN*	**476470**
728730	*US-EL*	**481568**!
728937	*UNIVE*	**455121**
728938	*MICH*	**455121**
72D4	*WHITE*	6644
72X100X10AN	*ISP*	72X100X10
72X100X12SC	*TRSCM*	72X100X12
72X100X12TC	*TRSCM*	72X100X12
72X7450	*GARLK*	204005
72X7451	*GARLK*	6832S
72X7452	*GARLK*	6832S
72X7455	*GARLK*	204017
72X7457	*GARLK*	204008
72X7458	*GARLK*	204007=
72X7459	*GARLK*	204038
72X7460	*GARLK*	204038
72X7461	*GARLK*	204002
72X8133	*GARLK*	6590S
72X90X10AN	*ISP*	72X90X10
72X95X10SC	*TRSCM*	72X95X10
72X95X10TC	*TRSCM*	72X95X10
73	*BL-KN*	**473243**
73-0007	*MCCOR*	13338
730002	*NATL*	733067
730013	*NATL*	733067
730015	*NATL*	733067
730028	*NATL*	733067
73003	*VIC*	800030
73004	*VIC*	800040
73005	*VIC*	800050
73006	*VIC*	800060
73007	*VIC*	800070
73007102	*FI-AL*	**415449**!
73007388	*FI-AL*	**473460**
73007497	*FI-AL*	**415498**
73007498	*FI-AL*	**450143**
73008	*VIC*	800080
73008139	*FI-AL*	**415995**!
73010	*VIC*	800100
73012	*VIC*	800120
73013	*VIC*	800130
73013171	*FI-AL*	**415960**!
73014	*VIC*	800140
73014379	*FI-AL*	**416282**
73014434	*FI-AL*	**415725**!
73016	*VIC*	800160
73017034	*FI-AL*	**415991**
73017034	*FI-AL*	455146!
73018	*VIC*	800180
73018434	*FI-AL*	**415379**!
73018434	*FI-AL*	**415379**
73020	*VIC*	800200
73021053	*FI-AL*	**471224**!
73021065	*FI-AL*	**417344**=
73022	*VIC*	800220
73022043	*FI-AL*	**415960**
73022066	*FI-AL*	**415371**
73024620	*FI-AL*	**412119**
73024645	*FI-AL*	**472439**
73024692	*FI-AL*	**473238**
73024729	*FI-AL*	**455330**!
73025	*VIC*	800250
73027709	*FI-AL*	**417316**=
73028	*VIC*	800280
73028697	*FI-AL*	**410308***
73028740	*FI-AL*	**471224**!
73030	*VIC*	800300
73032	*VIC*	800320
73033846	*FI-AL*	**471442**!
73034853	*FI-AL*	**471224**=
73034883	*FI-AL*	**470530**
73034958	*FI-AL*	**415984**=
73034959	*FI-AL*	**412119**
73035	*VIC*	800350
73035083	*FI-AL*	**472636**
73035084	*FI-AL*	415104N=
73037744	*FI-AL*	**471692**=
73037969	*FI-AL*	**417487**!
73037969	*FI-AL*	**417487**
73037981	*FI-AL*	**471272***=
73037990	*FI-AL*	**473238**=
73038	*VIC*	800380
73038222	*FI-AL*	**415854**
73038223	*FI-AL*	**470764**!
73038223	*FI-AL*	50764
73038675	*FI-AL*	**473231**!
73039422	*FI-AL*	**471554**!
73040	*VIC*	800400
73040054	*FI-AL*	**470565**!
73040062	*FI-AL*	**415327**
73040119	*FI-AL*	**415551**
73042826	*FI-AL*	8907
73045	*VIC*	800450
73045043	*FI-AL*	45187S
730461-1	*SPICE*	**417480**!
730463-1	*SPICE*	**417480**!
73048835	*FI-AL*	**410737**!
73050	*VIC*	800500
73055	*VIC*	800550
73056536	*FI-AL*	2505
73060	*VIC*	800600
73065	*VIC*	800650
73070	*VIC*	800700
730707X1	*IH*	**416888**!
73073R91	*IH*	**470954**!
73075	*VIC*	800750
73080	*VIC*	800800
730813X91	*IH*	**417355**!
73085	*VIC*	800850
73085	*WAUKE*	**415442**!
73085	*WAUKE*	55442
73090	*VIC*	800900
73095	*VIC*	800950
73100	*VIC*	801000
73104650	*FI-AL*	J1105
73104651	*FI-AL*	**473238**!
73107084	*FI-AL*	40094S
73110	*VIC*	801100
73110938	*FI-AL*	J1107
73110940	*FI-AL*	**472397**!
73120	*VIC*	801200
731202	*WILYS*	240151
73123794	*FI-AL*	200870
73124116	*FI-AL*	JV980=
73124610	*FI-AL*	**455655**!
73126934	*FI-AL*	370030A
73130	*VIC*	801300
73140	*VIC*	801400
731463-1	*SPICE*	**473239**
731463-4	*SPICE*	**471689**!
73150	*VIC*	801500
731523	*WILYS*	240151
73160	*VIC*	801600
73170	*VIC*	801700
73180	*VIC*	801800
73190	*VIC*	801900
73193	*ALLCH*	**412473**!
73194	*ALLCH*	**55301S**
731968	*CLARK*	**470954**
73197	*ALLCH*	**471887**
73200	*VIC*	802000
732228	*KELSE*	**413247**=
732229	*KELSE*	353132
732246	*KELSE*	**473474**=
732328	*KELSE*	**415035**
732333	*KELSE*	**415027**
732334	*KELSE*	370020A
732347	*FABCO*	**416364**!

! Industrial Size/Type * Minor Width Difference

= The U.S. customer service number is 877-4-TIMKEN. The Canadian customer service numbers are 800-565-4927 (English) and 800-565-0438 (French-Canadian).

Mfr. No.	Name	Zero Duplication or Recommended Industrial
732347	KELSE	**416364**!
732348	FABCO	**418028**
732352	FABCO	**417349**!
732355	FABCO	415146!
732355	FABCO	**415991**
732357	FABCO	**471267**!
732372	FABCO	**417316**!
732372	KELSE	**417316***=
7325LUP	JN-MN	**416624**!*
73260009	TROS	**415072**
73263207	TROS	**415294**!
7329	ALOY	3348
733	GREEN	240736
7332	CHAMP	240356
733290	WILYS	**471141**!
73339	WAUKE	40085S
7335	NATL	**473235**
7335LPD	JN-MN	417547
7336LPD	JN-MN	417548
7340LPD	JN-MN	55224*=
7340LUP	JN-MN	**456105**
7340LUP	JN-MN	55224=
73433	CROWN	**471267**!
734504	WILYS	410059
734504	WILYS	**470380**!
73453	CROWN	**416271**!
73459	CROWN	**415449**!
734631	SPICE	**472397**!
7346LPD	JN-MN	**474264**
7346LUP	JN-MN	**474264**
7347LPD	JN-MN	**472394***
7347LUP	JN-MN	**472394**
7348	TMTR	**470954**
73482	MURRA	**417433**
7348LPD	JN-MN	**474253**
7348LUP	JN-MN	**474253**
734A575AM	GE	**472258**
734A575AM1	GE	**472258**
734A575AN	GE	470328
734A575AN	GE	**481213**!
734A575BBP1	GE	6760S
734A575BC	GE	**471224**!
734A575BC1	GE	**471224**!
734A575BCP1	GE	**471224**!
735006	WILYS	9613S
73546311	SPICE	**470898**
7358	EATON	**473464**!
7358	EATON	**473464**
735884X	WILYS	**471643**!
735995	WILYS	**472560N**
735996	WILYS	**472560N**
73605H	IH	**410496**!
7360LPD	JN-MN	**415351**!
7360LUP	JN-MN	**415351**!
7361LPD	JN-MN	**473463**
7361LUP	JN-MN	**473463**
73628	MURRA	55218=
73645	MURRA	**415991**
73645	MURRA	455146!
736463-1	SPICE	**471138**!
73658	WAUKE	**471821**!
7365LPD	JN-MN	**473367**!
7365LPD	JN-MN	**473367**
7365LUP	JN-MN	**473367**!
7365LUP	JN-MN	**473367**
73687	HYST	55469
736K1	WHITE	6597S
7370	TAYLR	204038
7372612	CONTI	**472150**
73745	C-R	**455117***
737463-1	SPICE	**415483**
737463-2	SPICE	**416278**
737478	GMC	**470380**!
737478	GMC	472189A!
73750	C-R	**455117**
73751	C-R	**455117**
7375410	CONTI	240356
7376	F-R-H	**411253**!
73760	C-R	415317
73761	C-R	415317
738028X	WILYS	**415991**
738028X	WILYS	455146!
7380S	SPG	**415302**
7383S	SPG	321460
73857	ALLCH	**471984**
738612	C-R	55692=
73873	EATON	9128S
7388	ALLCH	**473460**
7388	TRAC	**473460**
7391S	SPG	9376
7394631	SPICE	415899N
7394631	SPICE	**416624**
73949	WAUKE	50199S!
73949	WAUKE	6863S!
7399S	NATL	343105
7399S	WMG	12305286
73A575BH1	GE	**471224**!
73P3	WHITE	40094S
73W1	WHITE	**416345**!
73W1	WHITE	455033
74-0003	MCCOR	35127
74-0096	MCCOR	25598
74-0117	MCCOR	35315
74-0118	MCCOR	35507
74-0147	MCCOR	35292
74-0148	MCCOR	35300
74-0164	MCCOR	35011
74-0164	MCCOR	35394
74-0198	MCCOR	35001
74-0204	MCCOR	35524
74-0211	MCCOR	35486
74-0224	MCCOR	35555
7400	C-R	473416
7400	C-R	710272
74001449	FI-AL	**472394**
74014	MURRA	455251H
740158	WILYS	6489
740173	MCCOR	427
74024562	FI-AL	456641
74028922	FI-AL	7568
74029502	FI-AL	**417360**
74029556	FI-AL	JX1828=
74043977	FI-AL	**415035**!
74043977	FI-AL	**415035**
74061865	FI-AL	**417360**
74062088	FI-AL	**417360**
74063H	IH	**323138**!
74065	EATON	410686N
7408	C-R	727410
7409	C-R	240735
7410	C-R	727410
7411	C-R	312518!
7411	C-R	342518
7411429	HWY	312196!
741147	GMC	370036A
741147	GMC	370349A
741147	GMC	380036A
7412	C-R	7214
7412257	WESTO	BS25035
7412463	WESTO	BS40110
7412521	WESTO	BS40380
7412547	WESTO	BS40396
7412661	WESTO	BS40509
7412711	WESTO	BS40578
7412729	WESTO	BS40592
7412745	WESTO	BS40620
7413	C-R	240816
7413	C-R	7929S
7413RXR	SPG	9613S
7414	C-R	**254270**!
74147	GMC	370036A
74147	GMC	370349A
7415	C-R	343185
7416599	CONTI	**415458**!
74166	HOUGH	**471504**!
74166	WAUKE	**473179**
7416B1	WABCO	**473230**!
74192A	HERCU	**471649**!
7420	C-R	**470954***
7422	C-R	**470954**!
7424	C-R	**470954**!
74241862	FI-AL	**471341**!
742463-1	SPICE	**416865**!
742463-2	SPICE	**473367**
742463-2	SPICE	**473367**!
742463-5	SPICE	**415138**!
742463-7	SPICE	**473233**!
7424636	SPICE	**471224**!
74251862	FI-AL	**471341**!
74252177	FI-AL	**415379**
74253052	FI-AL	**416271**!
74253297	FI-AL	40438S
74253341	FI-AL	**471571**
74253609	FI-AL	40566S
74253670	FI-AL	40370S
74253765	FI-AL	**473231**!
74253769	FI-AL	**455583N**!
74253781	FI-AL	**417171**!
74253982	FI-AL	**472287**!
74253999	FI-AL	**455336**
74254050	FI-AL	**471570**!
74254101	FI-AL	**473010**
74254152	FI-AL	**470898**
74254177	FI-AL	**471413**
74254228	FI-AL	**415458**!
74254269	FI-AL	**470954**!
74254670	FI-AL	**471787**!
74254936	FI-AL	**472258**
74254954	FI-AL	**450639**
74254963	FI-AL	**471554**!
74254986	FI-AL	40433S
74255130	FI-AL	**471829**
74255301	FI-AL	**471224**
74255587	FI-AL	**471424**!
74255839	FI-AL	**471787**!
74255851	FI-AL	40389S
74256022	FI-AL	**470530***=
7426497	WESTO	13338
7426653	WESTO	16201
7426679	WESTO	16202
7426927	WESTO	16203
7426935	WESTO	16204
7426950	WESTO	16212
7426968	WESTO	16213
7426976	WESTO	16214
7426A	C-R	**417507**!
7426A	C-R	**417507**
7428	C-R	**470954**!
7429798	WESTO	TCS45108
7429921	WESTO	TCS45472
7429947	WESTO	TCS45473
7429962	WESTO	TCS45483
742EP46740	LUF	370036A
742EP46740	LUF	370349A
742EP49180	LUF	370036A
742EP49180	LUF	370349A
742EP49247	LUF	HU009A
742EP49249	LUF	HU011A
742EP49252	LUF	HU013A
74301537	FI-AL	**471763**
743034	CLARK	**417269**=
7430S	SPG	370015A
74310523	FI-AL	**471192**
74310527	FI-AL	**471643**!
74311323	FI-AL	**416332**!
7431380	WESTO	TCS45603
7431810	WESTO	TCS45635
7431919	WESTO	TCS45724
7432	C-R	**470954**!
743231	CLARK	240356
7432420	WESTO	TCS45847
7433	C-R	**470954**
74331983	FI-AL	**457291**
74334	WAUKE	**472185**!
7434	C-R	**470954**
743463-3	SPICE	**470954**!
743463-4	SPICE	**417316**!
743463-5	SPICE	**417171**!
74349736	FI-AL	**472234**
7436363	WESTO	35224
7437	C-R	**470954***
74371692	FI-AL	**473214**!
743845	CLARK	**470625**!
74386879	FI-AL	**471649**!
74386927	FI-AL	**471689**!
74387605	FI-AL	**471688**=
7439	C-R	**470954**!*
74390171	FI-AL	**455583N**=
74391019	FI-AL	**471472**!
74394036	FI-AL	J1838*=
743987	LONG	204027
7440	C-R	**470954**!
7441	ALOY	**415458**
74410	AM WH	**472439**
74418	WAUKE	55236
7442N	SPG	7442H
7443	C-R	**470954**!
7444	SPICE	**473226**
744463-1	SPICE	**416229**
7445	ALOY	5121
7445	C-R	**470954**!
744581	HESST	**470605**!
7446	ALOY	3087
7446	C-R	**470954**!
744631	SPICE	**471224**!
744634	SPICE	**416271**!
744682	CATER	**416044**
7447	C-R	**470954**!
744789	HESST	**455280**
7448	C-R	**470954**!
74482	AM WH	**471442**!
744888	HESST	204029
744888	HESST	204507!
7449	C-R	**470954**
7450	C-R	**470954**
7450	C-R	**470954**!
74501458	FI-AL	**471765**!
7450174	WESTO	BS40387
7450190	WESTO	BS40449-1
74513621	FI-AL	**472439**
74516033	FI-AL	JX1238=
74516102	FI-AL	JX1363=
745201X	WILYS	**473239**
7452279	WESTO	35011
745267	DAVIS	341022
7452S	SPG	370019A
7453	C-R	**470954**
74538B	HERCU	240319

! Industrial Size/Type * Minor Width Difference

= The U.S. customer service number is 877-4-TIMKEN. The Canadian customer service numbers are 800-565-4927 (English) and 800-565-0438 (French-Canadian).

Mfr. No.	Name	Zero Duplication or Recommended Industrial
7453S	*SPG*	370021A
745463-4	*SPICE*	**472015**!
7454635	*SPICE*	**417343**!
7454S	*SPG*	370005A
7455	*C-R*	**470954**
74555301	*FI-AL*	**471224**
74559	*C-P*	**471571**
7455S	*SPG*	370006A
74568	*WAUKE*	**471744**!
7456A	*F-R-H*	**481864**
7457	*C-R*	**470954**!
7457	*SPG*	7457N
74573	*ALLCH*	**472029**
74574	*ALLCH*	**415995**!
74575	*ALLCH*	**471870**!
74575	*KEN*	**471870**!
7458854	*WESTO*	35292
7458870	*WESTO*	35533
7458938	*WESTO*	35315
7458946	*WESTO*	427RR
7459001	*WESTO*	25598
7460	*C-R*	**470954**!
7461	*C-R*	**470954**!
74610	*CROWN*	6668S
74611773	*FI-AL*	**471567**!
7462	*C-R*	**470954**!
74630121	*FI-AL*	J1123
74630273	*FI-AL*	415165H*=
7464	*C-R*	**470954**!
746463-1	*SPICE*	**473215**!
7465	*C-R*	**470954**!
74658	*WAUKE*	**471821**!
7467	*C-R*	**470954**
7469	*C-R*	**470954**!
7474	*C-R*	**480821**!
7475	*C-R*	**480821**!
7475	*C-R*	7013S
747528	*C-R*	**455297**
747530	*C-R*	417780
747616	*C-R*	**415294**!
74764	*C-R*	**415074**
74766	*C-R*	**455583N**!
74768	*C-R*	**455480**!
7478	*C-R*	**470954**!*
74789	*WAUKE*	**471442**!
7479	*C-R*	**480821**!
7479	*C-R*	7013S
7480	*C-R*	**470954**
74800	*C-R*	185X215X16
74805	*C-R*	190X220X15
74805	*C-R*	190X220X16!
74808	*C-R*	190X225X16V
7481	*ALOY*	8935S
7481	*C-R*	**480821**
7481	*SPICE*	474131
7481	*SPICE*	**480821**!
74818	*C-R*	190X230X16
74819990	*FI-AL*	416556!
74819990	*FI-AL*	**472157**
7482	*C-R*	**480821**!
7484	*C-R*	**471554**!
7484	*SPICE*	**471554**!
74841	*GRAM*	**473471**
74854	*ALLCH*	**415138**!
748616M1	*C-R*	**415294**!
7487	*AT SU*	7994S
7487	*SPG*	7994S
748H6	*C-R*	**415072***
74907118	*FI-AL*	**416297**
749077	*DAVIS*	**471766**
749234	*DAVIS*	340815
749242	*DAVIS*	**471341**!
7493	*C-R*	**471554**!
7494	*C-R*	**471554**!
7494	*SPICE*	**471554**!
749510	*LONG*	**471744**!
7497	*ALLCH*	**415498**
7497	*TRAC*	**415498**
7498	*ALOY*	8704S
7498	*C-R*	**471554**!
7498	*TRAC*	**450143**
74988992	*FI-AL*	**471504**
7499	*ALOY*	8695S
74994488	*FI-AL*	**416130**!
74DT7052B3A	*FORD*	2655
74DT7A248A3A	*FORD*	2658
74HB1175AA	*FORD*	370019A
74HB1175CA	*FORD*	**416865**
74HB1190AA	*FORD*	370087A
74HB1190AD	*FORD*	370087A
74P3	*WHITE*	40097S
75	*BL-KN*	417490
7500	*ALOY*	5124
75013S	*TROS*	340771
7502	*C-R*	**471554**!
75020	*C-R*	**415551**=
7503	*C-R*	**471554**!
75030	*C-R*	**415867**
75030	*FITZ*	5M81
75035	*C-R*	**415867**
75036	*C-R*	**415867**
75040	*SPICE*	**415001**!
7505	*C-R*	**471554**!
75050	*C-R*	**415551***
75052	*C-R*	**415551**=
750530	*C-R*	417780*
750530M1	*C-R*	417780*
75054	*DGASK*	BS40380
7506	*FAIRB*	**415072**
7506	*GR-DV*	**415072**
7506	*MINMA*	**415072**
75060	*C-R*	**415551**
75061	*C-R*	**415551**
75066	*C-R*	**455583N**!*
75066M1	*C-R*	**455583N**!*
7506K	*SUL*	**415072**
7507A	*C-R*	**473367**
7507A	*C-R*	**473367**!
7508	*C-R*	**471554**!*
75088	*ALLCH*	**415138**!
75089	*FITZ*	5M89
750A6	*C-R*	**415072***
750H6	*C-R*	**415072***
750H66-TB	*C-R*	**455583N**!
750W34-L	*C-R*	5405
7510	*C-R*	**471554**!*
7510512A	*HARWA*	75X105X13
7510A	*C-R*	**350364**
7511013B	*HARWA*	75X110X12
75111	*WAUKE*	470059
75111	*WAUKE*	**470380**!
75117	*WAUKE*	470059
75117	*WAUKE*	**470380**!
75117A	*WAUKE*	470059
75117A	*WAUKE*	**470380**!
7512	*C-R*	**471554**!
7512	*EATON*	**415991**
7512	*FULLE*	**415991**
7513	*C-R*	**471554**!
751369	*MARMO*	**470088**
751463-1	*SPICE*	**415379**
7515	*C-R*	**471554**!
7517	*C-R*	**471554**!
7520	*C-R*	**471554**!
75213	*SPICE*	**415001**!
7522	*C-R*	**471554**!
752352	*DAVIS*	**474272**!
752463-1	*SPICE*	**471854**!
75249336	*FI-AL*	**415483**
75249336	*FI-AL*	J1117
7526	*C-R*	**471554**!
75260H	*FULLE*	**472179**
75260H	*IH*	**472179**
75266	*FITZ*	**473450**!
7527	*C-R*	**471554**!
75270	*FITZ*	5M356
7528	*C-R*	**471554**!
75280	*SPICE*	**416158**
7529	*C-R*	**471554**!
753	*CARDX*	**473211**!
7530	*C-R*	240027=
753081	*ALLCH*	**416891**!
753081C33	*ALLCH*	**416891**!
753087	*DAVIS*	**472164**!
7531	*C-R*	**471554**!
7533	*C-R*	**471554**
7534	*C-R*	240027=
753463-1	*SPICE*	**471344**
75359	*GRAY*	470059
75359	*GRAY*	**470380**!
7535A	*C-R*	**470334**!
7536	*C-R*	**471554**!
7536	*DICO*	204029
7536	*DICO*	204507!
75360	*GRAY*	**472439**
75361	*GRAY*	**411253**!
75362	*GRAY*	**416921**!
7537	*AT SU*	7537S
7537	*C-R*	**471554**
753764	*DAVIS*	**350936**
7538	*C-R*	**481443**!
7539	*FULLE*	**415041**
754036	*DAVIS*	**471466**
754044	*DAVIS*	240735
75416	*FITZ*	5M289
7542	*ALOY*	493291
7542	*C-R*	**471554**!
754226	*DAVIS*	**472397**!
7542B	*CATER*	**411253**!
7542B	*HYST*	**411253**!
75453	*FITZ*	5MR71
7545A	*C-R*	**413469**!
754642	*SPICE*	**418028**
754642	*SPICE*	455137!
75479	*FITZ*	5MR71
7548	*C-R*	**471554**!
75480	*FITZ*	5MR71
7548S	*SPG*	3095
7549	*C-R*	**471554**!
75498	*FITZ*	5M356
755020C	*SPG*	**473244**
75503	*FITZ*	5M445
755185C	*SPG*	**415483**!
755238C	*SPG*	3341
75531	*CROWN*	**471442**!
755324C	*SPG*	**472655**
7554	*C-R*	**471567**!*
755463-1	*SPICE*	**473204**
755463-2	*SPICE*	**473204**
755463-3	*SPICE*	**470954**
755463-4	*SPICE*	**471854**!
7554655	*SPICE*	**473204**
7555	*C-R*	**471567**!
75569	*FITZ*	5M81
75573	*FITZ*	5MR71
755781	*CLARK*	**471750**!
75581	*RENAU*	35X50X8!
75581	*RENAU*	3771
75594	*ALLCH*	**471341**!
7561	*ALOY*	8121S
7562	*ALOY*	331227H
75628	*FITZ*	5M403
7563	*ALOY*	**471827**!
75637	*FITZ*	5M403
7564	*C-R*	**471567**!*
75644	*FITZ*	5M406=
7565	*ALOY*	6840S
7565	*C-R*	**471567**!*
75661	*FITZ*	6064
75662412	*TROS*	**417563**
75669	*FITZ*	5M89
75673	*FITZ*	5M466
7568	*ALOY*	**473235**
75681	*FITZ*	5M81
7569	*C-R*	**471567**!
7570	*C-R*	**471567**!
7571	*C-R*	**471567**!
75715	*FITZ*	5M559
75717	*FITZ*	5MR1008
75718	*FITZ*	5MR1009
7572	*C-R*	**471567**!
7572	*FULLE*	**417181**!
75721	*FITZ*	5M497
75724	*FITZ*	5M544
7573	*C-R*	**471567**!
75767	*ALLCH*	455820
7577A	*C-R*	**415001**!
7579	*C-R*	**471567**!
7579A	*C-R*	**473464**!
7579A	*C-R*	**473464**
757A7	*WHITE*	**471192**
7580	*C-R*	**471567**!
7580A	*C-R*	**350435**
758463-7	*SPICE*	**413247**=
758463-8	*SPICE*	**473229**=
758463-9	*SPICE*	**473204**=
75856TA	*TRSCM*	**415867**
7587	*C-R*	**471567**!
7588	*C-R*	**450340**
758A7	*WHITE*	**473227**
759008A	*HARWA*	75X90X10
75908F	*DIA*	5405
7591	*ALOY*	331228H
7591	*C-R*	**471498***
7591	*DOMGA*	331228H
7593	*C-R*	**471498***
7594	*ALOY*	3677
7594	*ALOY*	41257
759704-C91	*IH*	370019A
7599	*C-R*	**471498***
759A7	*WHITE*	**471795**
75DT7052A3A	*FORD*	2655
75KH-16	*MACK*	5578$
75WT7657AA	*FORD*	2443
75X100X10ASN	*ISP*	75X100X10
75X100X12SC	*TRSCM*	75X100X12!
75X100X12TC	*TRSCM*	75X100X12!
75X105X13	*SIMRT*	75X105X13
75X105X13SC	*TRSCM*	75X105X13
75X105X13TC	*TRSCM*	75X105X13
75X110X12	*SIMRT*	75X110X12
75X110X12SC	*TRSCM*	75X110X12
75X110X12TC	*TRSCM*	75X110X12
75X115X12AN	*ISP*	75X115X12
75X90X10	*SIMRT*	75X90X10
75X90X10SC	*TRSCM*	75X90X10
75X90X10TC	*TRSCM*	75X90X10
75X90X8ASN	*ISP*	75X90X8

! Industrial Size/Type * Minor Width Difference $ F-M Number Is Part Of A Kit
= The U.S. customer service number is 877-4-TIMKEN. The Canadian customer service numbers are 800-565-4927 (English) and 800-565-0438 (French-Canadian).

Mfr. No.	Name	Zero Duplication or Recommended Industrial
75X95X10SC	TRSCM	75X95X10
75X95X10TC	TRSCM	75X95X10
760040M1	MASSE	**330385**
760082A	SPG	712144
760096C	SPG	**473446**
7602	CHAMP	**471692**!
7603	CHAMP	**417191**
7604	CHAMP	**473239**
760463-1	SPICE	**417040**
7607A	C-R	**472354**!
760885-C91	IH	370023A
760886-C91	IH	HU066A
760908M1	MASSE	**471137**
761109	ELRNG	25598
7612S	NATL	353135
7612S	NATL	**474278**!
761463-1	SPICE	**472439**
761463-2	SPICE	**472164**!
761591-C91	IH	HU028A
761592-C1	IH	730001
761654M1	MASSE	**412473**!
7618	AT SU	9150S
761882M1	MASSE	**417181**!
7618S	SPG	9150S
761D6	WHITE	5471
76208C	DIA	6270
76210	C-R	416102
76215	C-R	416102
762463-1	SPICE	J1139=
76246361	SPICE	370043A
76250	C-R	**417598**
76251	C-R	**417598**
76255	C-R	**417598**
7627	C-R	**471643**!
7628	C-R	**471643**!
762D6	WHITE	JV701
7631	C-R	**471643**!
763123	AVCO	42081S!
7632452	FIAT	713063
7632453	FIAT	713054
76334	CHRYS	5711
763461-1	SPICE	100495
763461-1	SPICE	**417349**
7635	C-R	**471684**!
7636	C-R	**471684**!
76364	C-R	**457874**
76364	GR-DV	**457874**
76364M1	C-R	**457874**
76368	C-R	55316=
76368M1	C-R	55316=
763831	CLARK	455197N
763B516-L	C-R	8635S
7640	C-R	**471684**!
7641	C-R	**471684**!
76436	GMC	**474278**!
76447	CHRYS	**450084**!
7645	C-R	**471684**!
7646	C-R	**471684**!
76470H	IH	**471553**!
76490H	IH	**471787**!
765110B	SPERY	**417344**!
765110B	VICK	**417344**!
765143	VICK	**472397**!
7654634	SPICE	**415138**!
7657423	FIAT	713070
7660	C-R	450033
7660	C-R	473406
7661	C-R	473406!*
766571-C91	IH	370003A
7679S	SPG	7934S
768463-4	SPICE	**470898**
7684631	SPICE	**471272**!
76851	BENDI	**330385**!
76865TA	TRSCM	416102
76872	BENDI	**471570**!
7689	C-R	**470390***!
7689S	SPG	**473473**
7690	C-R	**470390**
76916TA	TRSCM	**417598**
7692	C-R	473407
7693	C-R	**472649**
76946	BENDI	**472179**
76976	WAUKE	**471281**!
76VB1175BA	FORD	2820=
76X13	GARLK	**330385**!
76X1329	GARLK	**472015**!
76X1482	GARLK	**471138**!
76X291	GARLK	**471649**!
76X3130	GARLK	**415938**
76X4701	GARLK	**472954**
76X5085	GARLK	**481537**
76X51	GARLK	**471526**!
76X541	GARLK	**471192**
76X6099	GARLK	**481397**
76X6103	GARLK	**471529**
76X6113	GARLK	1049
76X6156	GARLK	**471270**!
76X6169	GARLK	**471652**
76X6186	GARLK	7412S
76X714	GARLK	**473229**
76X7482	GARLK	**455583N**!
76X7488	GARLK	**471551**!
76X7501	GARLK	**330699**!
76X7504	GARLK	**472705**!
76X7510	GARLK	**472311**!
76X7512	GARLK	1037
76X7517	GARLK	**481163**!
76X7518	GARLK	**471766**!
76X7520	GARLK	340853
76X7521	GARLK	**472354**!
76X7534	GARLK	**476842**
76X8356	GARLK	**481481**
76X88	GARLK	**471466**!
76X8949	GARLK	**481481**
76X8952	GARLK	**471633**!
76X9489	GARLK	**471570**!
76X9490	GARLK	**471649**!
76X9675	GARLK	**450400**
76X9879	GARLK	335924N
76X9971	GARLK	**481181**!
76X9975	GARLK	**472015**!
76X9991	GARLK	**481443**!
76X9992	GARLK	**480581**
7700517057	RENAU	228010
7700522314	RENAU	35X50X8!
7700522314	RENAU	3771
7700695940	RENAU	716102
7700714702	AMC	222556
7700718598	AMC	222267
7700718598	RENAU	222267
7700719273	RENAU	223005
7700719274	RENAU	225020
7700725410	RENAU	222556
7700742021	RENAU	222267
7700743161	RENAU	228010
7700853373	CHRYS	229005
7700853373	RENAU	229005
7700854841	RENAU	713151
7700854842	RENAU	1172
7700854852	RENAU	1172
7700859691	RENAU	3771
7701348114	RENAU	713150
7701349138	RENAU	1172
7701349595	AMC	225020
7701349595	RENAU	225020
7701349596	RENAU	229005
7701349625	AMC	223005
7701349626	RENAU	1172
7701349629	RENAU	1172
770308097	AMC	3771
7703087035	RENAU	228010
7703087057	RENAU	1906
7703087068	RENAU	1970
7703087071	RENAU	1906
7703087075	RENAU	35X50X8!
7703087075	RENAU	3771
7703087079	RENAU	224520
7703087079	RENAU	45X60X10!
7703087080	RENAU	228010
7703087087	RENAU	223610
7703087087	RENAU	710197!
7703087097	AMC	3771
7703087104	RENAU	223010
7703087106	RENAU	223606
7703445	FT-WA	**470954**
7704631	SPICE	**415035**
77049	CROWN	**417485**
7705	FULLE	**417172**
7707246	GMC	**471766**=
770895	EL-PA	**450084**!
770914	EL-PA	**473215**!
77099	MATHR	39920
771018	EL-PA	**473010**
7710663	GMC	**471281**=
771081	EL-PA	**410102**
771085	EL-PA	**473471**
77115	HYST	**416107**!
7714892	WESTO	35301
7715014	WESTO	35300
7715857	WESTO	35001
7715881	WESTO	35094
7715915	WESTO	35402
7715923	WESTO	35410
7715956	WESTO	35486
7715S	C-R	2655
7716012	WESTO	35316
7716020	WESTO	35361
771723C91	IH	370021A
77173R91	IH	**410825**
7718472	BRADF	**476470**
7721	NATL	5113
7721	NATL	7721!
7723	TRAC	450313
772E-11	CLARK	**416271**!
772E-13	CLARK	**416271**!
7735S	NATL	**471652**
7740	C-R	**254270**
7741	FULLE	**475384**
7745	C-R	222028
77499H	IH	**417488**!
7750	C-R	8750S
775048E	SPG	**471272**
77518H	IH	**415991**
77518H	IH	455146!
77530	C-R	457299
77540	C-R	**455406**!
77550	C-R	**455406**!
77551	C-R	**455406**!
775612	C-R	55242
77568	C-R	**417562**
77568	FAIRB	**417562**
77568M1	C-R	**417562**
775698C91	IH	370003A
7756S	SPG	**470380**!
7756S	SPG	472189A!
7757	SPG	40576S
77585	C-R	**417115**
77595	C-R	457149N=
776438R1	IH	473437
77672	HYST	**470898**
77692	HYST	**470898**
7769S	SPG	6241S
777	GARLK	**481864**
77714	SPG	77714
7772	FULLE	**412861**
77732A	BENDI	**471554**!
77734	AM WH	**471689**!
7774634	SPICE	**473238**!
77746343	SPICE	**473238**!
7775N	NATL	**417354**!
777J-1	OSHKO	**415937**!
778037	WHITE	45637S
7780N	SPG	7780
77819H	IH	**410987**!
77819H	IH	450686
7782N	NATL	2942
77926SA	TRSCM	**455406**!
7797	EATON	5MR71
77993	HYST	**470954**
779D6	WHITE	5957S
77TK3K169A1A	FOOTE	3392
77TT3K169A9A	FORD	3392
77TT7048AA	FORD	3388
78	C-R	**415196**!
7800	C-R	19X32X7!
7800	C-R	19X32X8
78016	HYST	**473459**
7801626	GMC	313842
7802160	GMC	**480821**!
780316C91	IH	370124A
78062	WAUKE	**473227**!
78062	WAYNE	**473227**
7808195	GMC	7013S
78083	CHRYS	**474281**!
78084	AM WH	**473313**
780D6	WHITE	**415437**!
780D6	WHITE	**415437**
781175	FORD	5877
781175A	FORD	5877
7814	C-R	**470601**
781564-C92	IH	HU110A
781565-C91	IH	HU009A
7816612	GMC	**251511**
7824N	SPG	**471193**
7825S	SPG	**473228**!
7826470	GMC	PSK-1
78274	HARRI	**472560N**!
7828	C-R	**481443**!*
7828565	GMC	**471267**
7829	C-R	**481443**!*
7829887	GMC	222510
7831	C-R	**481443**!*
7832	C-R	**481443**!*
7832730	GMC	222025
7833	C-R	**481443**!*
7834	C-R	**481443**!
7835	C-R	**481443**!
7835A	C-R	**471835**!
7836	C-R	**481443**!
7836431	GMC	222510
7837	C-R	**481443**!
78371	HYST	5705*=
7837492	GMC	7013S
7838143	GMC	710285
7838145	GMC	710285
7839589	GMC	221925
7839S	SPG	7399S!
7841A	C-R	**473010**

! Industrial Size/Type * Minor Width Difference

= The U.S. customer service number is 877-4-TIMKEN. The Canadian customer service numbers are 800-565-4927 (English) and 800-565-0438 (French-Canadian).

Mfr. No.	Name	Zero Duplication or Recommended Industrial
7843	C-R	481443!
7845	C-R	451031=
78451	WIP-L	5433
7848	C-R	481568!*
7849	C-R	481568!
784911	CLARK	473229
784959	CLARK	5778
7852	C-R	481568!*
7853A	C-R	415458!
7854A	C-R	415437
7854A	C-R	415437!
78552	BENDI	330385!
7859	C-R	481568!
7860	EATON	416654!
78650	C-R	455397
7866A	C-R	416865!
7867A	C-R	415371
786D6	WHITE	415060
786D6	WHITE	455060
78703	C-R	200X230X15V
78705	C-R	200X230X15!
787052	FORD	472258
7871	C-R	481644*
78712	WAUKE	472354!
7872	C-R	481644
78725	C-R	417657=
7873	HYST	474281!
78730	C-R	455397
78738	C-R	455121*
78740	C-R	455121
78741	C-R	455121
7875	C-R	481644*
7878	C-R	481644
78780	C-R	417016
787D6	WHITE	416130!
7882A	C-R	473215!
7884	C-R	471337
788484C91	IH	370001A
788485C91	IH	370023A
788524	C-R	416024
78857	EATON	412473
7885A	C-R	417316!
7886	C-R	471337
7886	JOY	417563
788612	C-R	417563
788612	HU-WR	417563
788612M1	C-R	417563
7888	C-R	471337
7889	C-R	474273!
788CP612-L	C-R	417563
7890	C-R	474273
7893A	C-R	471689!
789W612	C-R	417563
78D	HWY	417518
78M1	WHITE	50468
78X100X10SC	TRSCM	78X100X10
78X100X10TC	TRSCM	78X100X10
78X114	GARLK	471553!
78X1474	GARLK	471272!
78X2120	GARLK	417344!
78X542	GARLK	471192
78X550	GARLK	470950!
78X550	GARLK	6241S
78X6231	GARLK	473231!
78X6252	GARLK	472164!
78X6436	GARLK	476820
78X648	GARLK	470380!
78X6870	GARLK	455134!
78X7033	GARLK	470954!
78X7090	GARLK	471271!
78X7256	GARLK	472446
78X7295	GARLK	416127
78X837	GARLK	473234!
78X9508	GARLK	471466!
78X9509	GARLK	471264!
78X9994	GARLK	471689!
79-339710	BUC-E	416888!
79-39910	BUC-E	416888!
7900	C-R	20X30X5
7900	C-R	222025
7901	C-R	20X28X6
7902	C-R	20X28X6
7902A	C-R	411253!
7904	C-R	20X30X7V
79043163	IVECO	713115
7905	C-R	20X30X7!
7905	C-R	222025
79057	EATON	470565=
79058080	NEHO	713149
7907	C-R	20X31X7
7909	C-R	20X30X7V
790963	GMC	416664!
790964	GMC	471271!
7910	C-R	20X32X7!
7910	C-R	222020
79102111	CHRYS	470059N
7912	C-R	20X32X7
7912	TOWNR	6575S
7914	C-R	222025!
791436	CLARK	240735
791471	GMC	4561V
791471	GMC	5602
7915	C-R	20X35X7!
7915	C-R	222030
7916	C-R	20X35X7
7917	C-R	20X35X7*
7918	C-R	222020
7919	C-R	20X36X7
7919S	SPG	471821!
7920	C-R	20X36X7
7920	C-R	222036
7921	C-R	20X36X7
7921	C-R	222036
7922	C-R	222030
7923	C-R	222030
7924	C-R	222036
7925	C-R	20X37X7
7925	C-R	20X37X8
7926	C-R	20X35X7*
7929	C-R	20X35X7!
7929	C-R	222030
7930	C-R	20X38X7
79302	C-R	417817
79303	C-R	417817
793246	GMC	100495
793246	GMC	5601
7933	C-R	20X38X7
7934	SPG	7934S
793666	GMC	417181!
7937H	SPG	473473
79385	HYST	415991!
79385	HYST	415991
79387	HYST	471271!
79388	HYST	417181!
79389	HYST	416271!
7940	C-R	20X40X7!
7940	C-R	222050
7941	C-R	20X40X7V
7941	FMS	472560N
7941	HYST	415988
79416	DGASK	13338
7942	C-R	20X40X7
7944	C-R	20X40X7V
794408C91	NAVST	370048A
794408C91	NAVST	380048A
7945	C-R	20X40X7V
79470	EATON	9773
7950	C-R	20X42X7
7950	C-R	222060
7950265040	NRWST	415551
7952	C-R	20X47X7
79526	DGASK	72665
7953	C-R	20X42X7V
7954	C-R	20X47X7
79567H	IH	415449!
7959	HYST	415351!
7960	C-R	20X46X7
796135	GMC	730003
79634H	IH	473238
7965	C-R	20X47X7
7966	C-R	20X47X7
7966589	WILYS	450588!
7966691	WILYS	471765!
79667H	IH	411253!
79668H	IH	416654
7967	C-R	20X47X7V
7967A	C-R	473467!
7968	C-R	20X47X7V
79680H	IH	470530!
79688H	IH	416654
7970	C-R	20X48X7
7975	C-R	20X50X7
797624M1	C-R	415327*
7979453	AMC	473367
7979453	AMC	473367!
7979455	AMC	473367!
7979455	AMC	473367
7979456	AMC	472826!
7980	C-R	20X52X7
7981	C-R	20X52X7
7983	C-R	20X52X7
7985071	AMC	410708
798528	GMC	415007
7989	WOODB	455079!
79903	EATON	253099
7993	TOWNR	200110
79950	C-R	415656
799527	CLARK	471570!
799528	CLARK	471267!
799529	CLARK	471413!
799530	CLARK	470625!
799531	CLARK	473227!
79960	C-R	415656*
79961	C-R	415656*
799845	GMC	473462
79997	C-R	417600
79998	C-R	417600
799990	GMC	50075=
799D5	WHITE	415137!
799D5	WHITE	418028
7A-032077	FWD	323138!
7A-032078	FWD	450400
7A032074	FWD	474276!
7A1110	OLIVE	412473!
7A1110	WHITE	412473!
7A1443A	OLIVE	417621!
7A1443B	OLIVE	417343!
7A1582	OLIVE	472164!
7A1590	OLIVE	470334!
7A2125	OLIVE	470954
7A930	OLIVE	470954!
7B0280	CATER	471554
7B0368	CATER	416154!
7B1955	CATER	417621=
7B1955	SKIL	417621=
7B2051	CATER	413469
7B2174	CATER	471192
7B2174	WESTR	471192
7B280	CATER	471554!
7B3568	CATER	416154!
7B368	CATER	416154!
7B3736	CATER	415007
7B3785	CATER	415035
7B3785	CATER	415035!
7B430	CATER	417316!
7B4375	CATER	471526!
7B4624	CATER	412871!
7B4962	CATER	417621!
7B5425	CATER	415449!
7B556	CATER	471255!
7B8320	CATER	471570!
7B8821	CATER	412473!
7C-1728	CATER	39044
7C-1728	CATER	39883
7C1813	CATER	39926
7C3570	CATER	39881
7C3571	CATER	39880
7C4163	CATER	39882
7C4297	CATER	39886
7C6660	CATER	415303
7C7473	CATER	J2608
7D003	SHOV	470088
7D011	SHOV	455336
7D33	CATER	416292
7D7837	CASE	200799=
7D9007	CATER	352541
7E7589	CATER	39880
7E7589	CATER	39881
7EA6700	FORD	473010
7EQ1174	FORD	5401$
7EQ1175	FORD	6270
7EQ1175A	FORD	6270
7EQ1181	FORD	5401
7EQ1181A	FORD	5401
7EQ1181A2	FORD	5401
7EQ4676	FORD	412119
7EQ4813	FORD	470898!
7EQH1174	FORD	6532S=
7EQH1175	FORD	456618
7EQH1181	FORD	6532S=
7EQH4168	FORD	5M867
7EQH4676	FORD	415458!
7F2063	CATER	471763
7F3211	CATER	472439
7F3536	CATER	474278!
7F3536	CATER	6859S
7F4236	CATER	456057
7F5916	CATER	415551
7F5921	CATER	417350!
7F6885	CATER	417487
7F9214	CATER	415035
7H2199	CATER	415213N
7H6991	CATER	412943
7H7107	CATER	472015!
7J6582	CATER	417211!
7J6583	CATER	415991
7J6583	CATER	455146!
7J7673	CATER	471466
7K2009	CATER	471138!
7K2830	CATER	415458!
7K9201	CATER	710023
7K9202	CATER	710024
7K9203	CATER	710025
7K9204	CATER	710026
7K9205	CATER	710027
7K9206	CATER	710027
7K9208	CATER	710038
7K9209	CATER	710028

! Industrial Size/Type * Minor Width Difference $ F-M Number Is Part Of A Kit
= The U.S. customer service number is 877-4-TIMKEN. The Canadian customer service numbers are 800-565-4927 (English) and 800-565-0438 (French-Canadian).

Mfr. No.	Name	Zero Duplication or Recommended Industrial
7K9211	CATER	710030
7K9214	CATER	710035
7K9216	CATER	710036
7K9217	CATER	710031
7K9219	CATER	710037
7K9220	CATER	710032
7L2343	CASE	470625!
7L2345	CATER	470625!
7L6383	CATER	472015=
7L6608	CATER	455134=
7M2492	CATER	441130
7M3956	CATER	472810*
7M4236	CATER	456057
7M7525	CATER	471649
7M8451	CATER	415379
7M8680	CATER	473235!
7M8805	CATER	473367!
7M8805	CATER	473367
7M8930	CATER	470059
7M8930	CATER	470380!
7N1999	CATER	5613!
7NF-08	GEM	6703S
7NF-09	GEM	6703S
7NF-09	ROSS	6703S
7QH1175	FORD	370023A
7RA7657	FORD	473228!
7S6798	CATER	330385
7W3200	CATER	39801
7W6130	CATER	5613!
7W6131	CATER	5613!
7X16X7	FORSH	7X16X7
7X16X7	SIMRT	7X16X7
7X16X7SC	TRSCM	7X16X7
7X16X7TC	TRSCM	7X16X7
7X22X7	FORSH	7X22X7
7X22X7	SIMRT	7X22X7
7X22X7SC	TRSCM	7X22X7
7X22X7TC	TRSCM	7X22X7
7X4742	CATER	417247=
7X4779	CATER	4603V=
7X658	CATER	J1984*=
7XA745	OLIVE	55141
7XA864	OLIVE	415303!
7Y1039	CHRYS	473215!
7Y1039	DIA	473215!
7Y1039	GWI	473215!
7Y1039	IH	473215!
7Y1039	WHITE	473215!
7Y1040	CHRYS	450593!
7Y1040	DIA	450593!
7Y1040	GWI	450593!
7Y1040	IH	450593!
7Y1040	KEN	450593!
7Y1040	WHITE	450593!
7Y1255	GWI	471554!
7Y1518	GWI	471224!
8	BL-KN	415196!
8-94336316-0	GMC	710080
8-94367958-0	GMC	710080
8-94367960-1	GMC	710081
8-97023977-1	GMC	710080
8-CG134	MACK	471553!
8-CG175	MACK	472636!
8-EJW32	MACK	450307
80-0616	BUC-E	416229
800	NEA	35402
800	UNIVE	417602!
80000	C-R	417600
800001-043	MERCE	100X130X12!
80001	C-R	417600
800093	WILYS	5585
8001	C-R	6357S
80010	C-R	417601
800100	MICH	417602!*
8001000	UNIVE	417602!
800108	GMC	471272=
80012	MCCOR	450044
800128	HESST	410989
800128	HESST	470989
80013	MCCOR	472287!
80014	MCCOR	471570!
80015	MCCOR	450040
80016	MCCOR	473215!
800166	ALLCH	470334!
80016602	ALLCH	470334!
800181	ALLCH	471787!
80018R91	IH	5406
80020	C-R	417601
80021	C-R	417601
800223	ALLCH	474272!
800225	ALLCH	412473!
80022505	ALLCH	412473!
80028	MCCOR	473234
80030	MCCOR	450666
80032	MCCOR	471689!
80034	MCCOR	471354!
80034S	MCCOR	471354!
80035	C-R	417602!
80035	MCCOR	480630!
800351	ALLCH	471765!
80036	C-R	417602!
80037	C-R	417602!
800371	ALLCH	471649!
80037103	ALLCH	471649!
80038	C-R	417602!
8003854	GMC	450165
8003854	GMC	471801!
8003855	GMC	417316!
80040	C-R	417602!
80042	MCCOR	471750!
8004633	GMC	416888
8004670	GMC	416888
8004670	GMC	455137!
8004673	GMC	473449
8004846	GMC	417621!
8004848	GMC	472397!
8004855	GMC	416888
8004866	GMC	472636!
8004867	GMC	472397!
8004885	GMC	471504!
80051344	FALKC	417567
80051353	FALKC	415035!
80051353	FALKC	415035
80051354	FALKC	416292
800537	ALLCH	240414
80055	C-R	417602!
80056	MCCOR	473213!
80058	MCCOR	473228
80059	MCCOR	473419
80060	C-R	417602!*
80060	MCCOR	474253
800616	B-L-H	416229
800616	C-R	416229
800616	GAL	416229
800616	GR-DV	416229
800616	MINMA	416229
800616M1	C-R	416229
800624	C-R	415327
80063212	TROS	416229
80063216	TROS	416229
80064	MCCOR	5976S
80066	MCCOR	471224!
80068	MCCOR	473212!
80069	MCCOR	471413
8007	C-R	416364!
8007	ONAN	471766!
80071	MCCOR	472560N!
8007118	GWI	471341!
800716	ALLCH	340771
80072	MCCOR	473438
80076	MCCOR	473228!
80079	MCCOR	472354!
800797	ALLCH	472311!
8008	KINNR	481073
80080	C-R	417602!
80080	MCCOR	470950!
80080	MCCOR	6241S
80081	C-R	417602!*
80083	MCCOR	471820
80084	C-R	417602!*
80085	C-R	417602!*
80089	MCCOR	472258
80090	C-R	417602!*
80090	MCCOR	473211!
800906	ALLCH	471868
80090602	ALLCH	471868
80091	MCCOR	471192
8009164	GWI	40316S
80092	C-R	415052
80092	MCCOR	50468
80093	MCCOR	472164!
80093H	IH	470059
80093H	IH	470380!
80095	MCCOR	6936S
80096	MCCOR	474264
80097	C-R	7131
80097	MCCOR	473367!
80097	MCCOR	473367
80099	MCCOR	470625!
800A616	C-R	416229
801006TA	TRSCM	417602!
80101	MCCOR	450173
80102	MCCOR	471766!
80102S	MCCOR	471766!
80103	MCCOR	471765!
80105	MCCOR	471835!
80106	MCCOR	472705!
80107	MCCOR	471553!
80108	MCCOR	476838!
80108S	MCCOR	476838!
80109	GWI	471224!
80109	IH	471224!
80109	MCCOR	5M406=
80109	WHITE	471224!
80110	MCCOR	481644
80111	MCCOR	450165
80111	MCCOR	471801!
80112	MCCOR	471192
80113	MCCOR	470606!
80114R1	IH	240009
80118	MCCOR	470625!
80120	MCCOR	473231
8012013A	HARWA	80X120X13
80120S	MCCOR	473231
80121	MCCOR	471787
80122	MCCOR	472164!
80123	MCCOR	473227!
80124	MCCOR	450400
80125	MCCOR	470774!
80126	MCCOR	450593!
80127	MCCOR	353141!
80128	MCCOR	470004!
80130	MCCOR	471532
80133	MCCOR	40576S
80138	MCCOR	471787!
80139	MCCOR	473426
80140	MCCOR	6241S
80141	MCCOR	470625!
80146	MCCOR	473226
80147	MCCOR	473228
80148	MCCOR	473229
8015	C-R	471539!
8016	C-R	471539!
80161	MCCOR	471763
80162	MCCOR	473215!
80164	MCCOR	473367
801641	AM HO	416107!
801641	AM HO	455073
801642	AM HO	417554!
80166	MCCOR	471264
80167	MCCOR	240119
80168	MCCOR	471224
80169	MCCOR	470954
8017	C-R	471539!*
801723	WILYS	340413
80174	MCCOR	471281!
80175	MCCOR	471466!
8017591	GMC	350364
80175S	MCCOR	471466!
80176	MCCOR	50010
80177	MCCOR	471472!
801774	AM HO	416158
80178JA	PARK	416342=
80179	MCCOR	471549!
80179AA	PARK	7973S
80179AQ	PARK	416865!
80179BP	PARK	415867
80179HY	PARK	415725!
80179HZ	PARK	417254
80179JA	PARK	416342=
80179JE	PARK	415072
80179KF	PARK	473179!
80179KH	REPUB	416664!
80179KJ	REPUB	476470
80179KJ	REPUB	476470!
80180	MCCOR	471255!
80180S	MCCOR	471255!
80181	MCCOR	50026
801816	WILYS	340787
80182	MCCOR	471554!
80182S	MCCOR	471554!
80183	MCCOR	471567!
80183S	MCCOR	471567!
80184	MCCOR	473414
80185	MCCOR	471137
80186	MCCOR	450039
80188	MCCOR	450048
80189	MCCOR	473427
8019	C-R	471539
80190	MCCOR	450054
80191	MCCOR	473225!
80192	MCCOR	470059
80192	MCCOR	470380!
80192S	MCCOR	470059
80192S	MCCOR	470380!
80193	MCCOR	474264
80194	MCCOR	471821!
80195	MCCOR	450065
80197	MCCOR	471442!
80198	MCCOR	450129
80198	MCCOR	472826!
80198S	MCCOR	450129
80198S	MCCOR	472826!
802	UNIVE	455123*
8020	C-R	471539!
80200	MCCOR	471750!
80201	MCCOR	473205
80202	MCCOR	471760

! Industrial Size/Type * Minor Width Difference

= The U.S. customer service number is 877-4-TIMKEN. The Canadian customer service numbers are 800-565-4927 (English) and 800-565-0438 (French-Canadian).

Mfr. No.	Name	Zero Duplication or Recommended Industrial
80203	MCCOR	**471762**!
80204	MCCOR	**471763**
80205	MCCOR	**473214**
80206	MCCOR	**473016**!
80207	MCCOR	**471571**
80208	MCCOR	**450188**
80209	MCCOR	**473010**
80212	MCCOR	50199S!
80212	MCCOR	6863S!
80213	MCCOR	**471231**!
80213S	MCCOR	**471231**!
80214	MCCOR	**471646**!
80215	MCCOR	**471647**
80216	MCCOR	**471649**!
80217	MCCOR	**471733**
80218	MCCOR	**470712**!
80219	MCCOR	**471785**!
80219S	MCCOR	**471785**!
8022	C-R	**471539**!
80220	MCCOR	**471795**
80221	MCCOR	473436
80222	MCCOR	50327
80223	MCCOR	**474255**
80225	MCCOR	**471504**!
80226	MCCOR	**474278**!
80227	MCCOR	**474276**!
80228	MCCOR	**330385**!
80229	MCCOR	**473227**
8023	C-R	**471539**!
80230	MCCOR	353132
80232	MCCOR	**472299**
80233	MCCOR	**323138**!
80234	MCCOR	450482
8023438	FAIRB	**415371**
80235	MCCOR	50490=
80237	MCCOR	**473423**
80238	MCCOR	**474276**!
80239	MCCOR	**471255**!
8024	FULLE	415146!
8024	FULLE	**415991**
8024	JA-MI	415146!
8024	JA-MI	**415991**
8024	JAE	415146!
8024	JAE	**415991**
8026	FULLE	**417316**!
80269	MCCOR	5M445
8027	C-R	**480889**
8027	FULLE	**417191**
80272	MCCOR	6966S
80273	MCCOR	**471413**!
802732	ALLCH	**472560N**!
80275	MCCOR	**470712**
80278	MCCOR	**450339**
80279	MCCOR	50402
8027A	C-R	200640
8028	JN-MN	370007A
80280	MCCOR	50462
80281	MCCOR	450535
80281	MCCOR	**471264**!
80282	MCCOR	450536
80282	MCCOR	**471535**!
80283	MCCOR	**471267**!
8028356	GMC	**416288**!
80286	MCCOR	410059
80286	MCCOR	**470380**!
80287	MCCOR	40067S=
8028747	GMC	**470088**
8028752	GMC	**471689**!
8028753	GMC	**471103**!
8028754	GMC	**471570**!
80288	MCCOR	240356
80289	MCCOR	240151
80289	NATL	200600
8029	C-R	**471231**!
80291	MCCOR	240733
8029148	GMC	**471646**!
80293	MCCOR	240009
80295	MCCOR	340797
80296	MCCOR	**471526**!
80297	MCCOR	6489
80298	MCCOR	**473228**
80299	MCCOR	**471224**!
8030	C-R	**471231**!
80300	MCCOR	**471276**
80301	MCCOR	**471765**!
80302	MCCOR	**472258**!
80303	MCCOR	**471827**
80304	MCCOR	**471829**
80305	MCCOR	**473445**
80305S	MCCOR	**473445**
80306	MCCOR	450398
80306	MCCOR	**471267**!
80307	MCCOR	**471192**
80308	MCCOR	**471766**!
80309	MCCOR	240319
80310	MCCOR	**472354**!
80311	MCCOR	42763
80312	MCCOR	40468
80314	MCCOR	481650
80315	MCCOR	**471735**
80316	MCCOR	**471764**!
803162	Y-T	**411330**!
80317	MCCOR	**471103**!
80317S	MCCOR	**471103**!
80318	MCCOR	**481443**!
80319	MCCOR	**471192**
80320	MCCOR	**473228**!
80321	MCCOR	**471344**
80324	MCCOR	**471619**!
80329	MCCOR	473435
80330	MCCOR	6370N
80332	MCCOR	**471442**!
803329	WILYS	**472560N**
80333	MCCOR	483054N
80334	MCCOR	417267
80335	MCCOR	**473203**
80336	MCCOR	**330385**
80337	MCCOR	40769S
80338	MCCOR	6489
80339	CUMMI	**473228**
80339	OLIVE	**473228**
80341	MCCOR	**472560N**
80342	MCCOR	340724!
80343	MCCOR	**471801**!
80344	MCCOR	**471829**
80345	MCCOR	**471571**
8034503	GMC	**471271**!
80347	MCCOR	**480630**
80348	MCCOR	**471765**!
80349	MCCOR	340927
80352	MCCOR	410059
80352	MCCOR	**470380**!
80355	MCCOR	40769S
80356	MCCOR	**472164**!
80358	MCCOR	**470954**!
80359	MCCOR	340787
8036	JN-MN	370001A
80360	MCCOR	340413
80362	MCCOR	**474279N**
80365	MCCOR	**471765**!
80366	MCCOR	**471192**
80367	MCCOR	**471529**
80368	MCCOR	**254270**
80369	MCCOR	240385
8037	JN-MN	370048A
803712	ALLCH	**471649**!
803732	ALLCH	**472560N**!
803735	ALLCH	**451583**!
80374	MCCOR	240435
8037417	GMC	**417481**
8037418	GMC	**418028**
8037418	GMC	455137!
803764	WILYS	370021A
80377	MCCOR	240414
80378	MCCOR	**481073**
80379	MCCOR	240319
80380	MCCOR	240462
80381	MCCOR	450033
80383	MCCOR	**471692**!
80387	MCCOR	6312
80388	MCCOR	**472287**!
80389	MCCOR	**473421**
80390	MCCOR	**473367**
803900	AMC	**471787**!
803900	WILYS	**471787**
80392	MCCOR	**474276**
80393	MCCOR	40328
80398	MCCOR	**350936**
80398N	MCCOR	**350936**
80399	MCCOR	**452222**!
804	UNIVE	**415124**
80400	MCCOR	**471267**!
80403	MCCOR	**323138**!
80405	MCCOR	**470954**!
80406	MCCOR	240698
80408	MCCOR	9613S
80409	MCCOR	**471539**!
80410	MCCOR	**471413**!
804101	MICH	**455123***
8041012	UNIVE	**455123***
80416	MCCOR	**471684**!
80418	MCCOR	**481568**!
80420	MCCOR	**471526**!
80421	MCCOR	**471689**!
80422	MCCOR	40059S
80424	MCCOR	**473228**!
80425	MCCOR	50254=
80426	MCCOR	**471570**!
80428	MCCOR	**471504**!
80429	MCCOR	6597S
8043	C-R	**471231**!
80430	MCCOR	**471564**
80431	MCCOR	**471766**!
80432	MCCOR	**471649**!
8043208	GMC	**455079**!
8043209	GMC	**417357**
8043209	GMC	455192!
80434	MCCOR	340815
80435	MCCOR	**471750**!
80436	MCCOR	6597S
80437	MCCOR	**471705**!
80438	MCCOR	43089S
80439	MCCOR	6760S
8043932	GMC	**471760**
8043933	GMC	**473010**
8043934	GMC	**473226**
8044	C-R	**471231**!
80440	MCCOR	6241S
80442	MCCOR	340210
80444	MCCOR	**470954**!
80446	MCCOR	340771
80447	MCCOR	240470
80448	MCCOR	**350364**
80449	MCCOR	**471264**!
80450	MCCOR	**481443**!
80453	MCCOR	**450666**
80454	MCCOR	6985
8045416	GMC	**471787**!
80455	MCCOR	6840S
80456	MCCOR	6815
80458	MCCOR	**473229**
80459	MCCOR	**473367**!
80459	MCCOR	**473367**
80461	MCCOR	40438S
80462	MCCOR	**470954**
80463	MCCOR	**470774**!
8046320	SPICE	**415379**
8046320	SPICE	**415379**!
8046333	SPICE	456744N
8046339	SPICE	**416921**!
804634	SPICE	100495
804634	SPICE	**417349**
80464	MCCOR	6241S
80465	MCCOR	**474278**!
80465	MCCOR	6859S
80466	MCCOR	**471827**
80467	MCCOR	6966S
80469	MCCOR	6863S!
80470	MCCOR	**471076**
8047077	GMC	**413478**
80471	MCCOR	**472258**
80473	MCCOR	**470774**!
80475	MCCOR	417267
80481	MCCOR	**471466**!
80483	MCCOR	350156
80483	MCCOR	**473096**
80484	MCCOR	**480210**!
80485	MCCOR	472951
80485	MCCOR	**474252**
80486	MCCOR	**471688**
80487	MCCOR	**471652**
80488	MCCOR	**472311**!
80489	MCCOR	**473224**!
80490	MCCOR	**470506**!
80491	MCCOR	**471267**!
80493	MCCOR	**473228**!
80494	MCCOR	240731
80495	MCCOR	240735
80496	MCCOR	240736
80497	MCCOR	240816
80499	MCCOR	**471224**!
80500	MCCOR	**350364**
80501	MCCOR	**471267**!
80502	MCCOR	**254287**
80503	MCCOR	**481163**!
80504	MCCOR	**473227**
8050473	GMC	**471272**!
80505	MCCOR	**473424**!
80506	MCCOR	**350974**!
80508	MCCOR	6759S
80509	MCCOR	6952S=
8051	C-R	**471231**!
80511	MCCOR	340356
80512	MCCOR	205017
80513	MCCOR	**471652**
80513	MCCOR	482208!
80514	MCCOR	9568
805150	WILYS	6626S
80516	MCCOR	40185
80517	MCCOR	**473215**!
80517A	HERCU	**471689**!
80518	MCCOR	**472810**!
8052	C-R	**471231**!
80522	MCCOR	**471442**!
80523	MCCOR	**470380**!
80524	MCCOR	**450604**
80525	MCCOR	**471567**!
80526	MCCOR	**471413**

! Industrial Size/Type * Minor Width Difference

= The U.S. customer service number is 877-4-TIMKEN. The Canadian customer service numbers are 800-565-4927 (English) and 800-565-0438 (French-Canadian).

Mfr. No.	Name	Zero Duplication or Recommended Industrial
80527	MCCOR	240009
80528	MCCOR	**471267**!
80529	MCCOR	**473317**
80529S	MCCOR	**473317**
805308	WILYS	40286
80531	MCCOR	6966S
80532	MCCOR	**473231**!
80533	MCCOR	**472164**
80534	MCCOR	7018N=
80535	MCCOR	**473234**
80536	MCCOR	7686S
80537	MCCOR	**470625**!
80539	MCCOR	**474256**
80540	MCCOR	340787
80541	MCCOR	**352541**
80542	MCCOR	**470954**!
805424	AM HO	**416345**!
805424	AM HO	455033
805425	AM HO	**415035**
805425	AM HO	**415035**!
805430	AM HO	**416888**!
805432	AM HO	**415351**!
8054341	GMC	**473016**!
805449	AM HO	**417298**
80545	MCCOR	**471787**
80546	MCCOR	**472354**!
80548	MCCOR	473412
80549	MCCOR	**471264**!
8055	C-R	**471231**!
80550	MCCOR	7014S
80551	MCCOR	340823
80553	MCCOR	**451583**!
80554	MCCOR	**471763**
80556	MCCOR	**473228**
80557	MCCOR	**471195**!
80559	MCCOR	**471224**
8056	C-R	**471231**!*
80560	MCCOR	340853
80562	MCCOR	**471267**!
80564	MCCOR	**473454**
80566	MCCOR	**470954**
80569	MCCOR	450124=
80570	MCCOR	**473426**
80572	MCCOR	**473237**!
80574	MCCOR	50199S!
80574	MCCOR	6863S!
805741	WILYS	**471267**!
80575	MCCOR	6847S
80576	MCCOR	340400
8057681	GMC	**473228**
80577	MCCOR	6703S
80582	MCCOR	321460
80589	MCCOR	**473237**
80590	MCCOR	7456N
80593	MCCOR	**471193**
80594	MCCOR	7994S
80595	MCCOR	**451182**
80597	MCCOR	**473234**!
8059958	GMC	**417481**
805D5	WHITE	**417159**
805VB7	MARI	**417602**!
806	NEA	25598
806	UNIVE	**417022**
8060	C-R	**471231**!
8060	JN-MN	AR10+370020A
80600	MCCOR	7188S
80601	MCCOR	7537S
8060152	GMC	**473228**
80602	MCCOR	7399S!
80603	MCCOR	7840S
80604	MCCOR	7399S!
80605	MCCOR	**480210**!
80606	MCCOR	40769S
80607	MCCOR	7412S
8060884	WHITE	386025A
8060889	WHITE	370048A
8060889	WHITE	380048A
80609	MCCOR	**474260**
80610	MCCOR	41257!
80612	MCCOR	331228H
80614	MCCOR	**470774**!
80615	MCCOR	203008
80616	MCCOR	353135
80616	MCCOR	**474278**!
80617	MCCOR	203016
80618	MCCOR	**471750**
80619	MCCOR	203003
80620	MCCOR	6906S
80621	MCCOR	203012
80622	MCCOR	203025
80623	MCCOR	203013
80624	MCCOR	6832S
80625	MCCOR	204008
80627	MCCOR	204020
80627	MCCOR	204505!
80628	MCCOR	**481073**
80629	MCCOR	50883=
80630	MCCOR	**471765**
80631	MCCOR	410059
80631	MCCOR	**470380**!
80632	MCCOR	**450400**
80633	MCCOR	204017
80635	MCCOR	**482253**
80636	MCCOR	203003
8063666	GMC	**471762**!
80639	MCCOR	**471744**!
80640	AM WH	**471765**!
80640	MCCOR	**471195**!
80641	AM WH	**473228**
80641	MCCOR	**471821**!
80643	MCCOR	203029
80645	MCCOR	**473228**!
80646	MCCOR	7442H
80648	MCCOR	**473214**
80649	MCCOR	6241S
80650	MCCOR	**471538**
80651	MCCOR	7886S
80652	MCCOR	7013S
8065485	GMC	**412920**!
80657	MCCOR	240119
80658	MCCOR	7607
80660	MCCOR	**471827**!
80661	MCCOR	7934S
80662	MCCOR	291295
80663	MCCOR	**471193**
80664	MCCOR	7929S
80665	MCCOR	8059S
80666	MCCOR	7245
80670	MCCOR	8293S
80671	MCCOR	**471827**
80671	NATL	200640
80672	MCCOR	8121S
80673	MCCOR	8133S
80674	MCCOR	7994S
80675	MCCOR	**484054**
80676	MCCOR	342805
8067692	GMC	**472179**
8067694	GMC	**476838**!
80678	MCCOR	**471766**
80679	MCCOR	5MR1300
80680	MCCOR	331173
80681	MCCOR	**473454**
80682	MCCOR	**472164**
80683	MCCOR	**472705**!
80685	MCCOR	**471652**
80686	MCCOR	**480821**!
80687	MCCOR	**473228**
80688	MCCOR	410059
80688	MCCOR	**470380**!
80690	MCCOR	9613S
80691	MCCOR	50266
80692	MCCOR	7934S
80693	MCCOR	8597S
80696	MCCOR	**471193**
80697	MCCOR	**471267**!
80698	MCCOR	51322
80700	MCCOR	311189
80701	MCCOR	7686S
80702	MCCOR	8660S
80703	MCCOR	8705S
80704	MCCOR	9569S
807541	Y-T	6886S
807608	CUSH	**472287**!
807610	CUSH	205004
807611	CUSH	**471571**
807626	CUSH	240731
807630	CUSH	204020
807630	CUSH	204505!
807734	AM HO	**415379**
807734	AM HO	**415379**!
807975	AM HO	455129
807VB7	MARI	**417604**
808	UNIVE	**417604***
8080	C-R	353131*
808102	MICH	**415124**
8081025	UNIVE	**415124***
808118	AM HO	**417362**!
808151	AM HO	**415938**
808197	AM HO	**416364**!
8083254	GMC	**416271**!
8083554	GMC	**415023**
8083560	GMC	**476470**
8087	C-R	**474253**!
8088	C-R	**474253***
8088	C-R	**474253***
8088	C-R	**474253**
808VB7	MARI	**415128**
80926TA	TRSCM	**417600**
809323	ACF	**450456**!
8093412	GMC	**418028**
8093412	GMC	455137!
80956TA	TRSCM	**417601**
809864	WILYS	**470625**!
8099	C-R	**474253**!
8099723	GMC	**472636**!
8099724	GMC	**470530**!
809VB7	MARI	**417601**
80AX755	MACK	J1288=
80AX758	MACK	J1293=
80AX763	MACK	J1123
80DT7052A3A	FORD	2655
80ET7048AA	FORD	2503
80ET7048AA	FORD	2503N
80ET7052AA	FORD	2443
80L1	GR-DV	J1120=
80L2	GR-DV	J1129
80L4	GR-DV	J1109
80L5	GR-DV	J1121
80L6	GR-DV	J1117
80L7	GR-DV	J1118
80L8	GR-DV	J1131
80L9	GR-DV	J1119
80M1	GR-DV	J1136
80M10	GR-DV	J1140
80M11	GR-DV	J1081
80M12	GR-DV	J1107
80M13	GR-DV	J1105
80M4	GR-DV	J1132
80M5	GR-DV	J1101
80M6	GR-DV	J1122
80TX116	COTTA	**471192**
80TX125	COTTA	**472185**!
80TX134	COTTA	**411253**!
80TX144	COTTA	**415960**!
80TX288	COTTA	455197N
80TX314	COTTA	**417349**!
80TX334	COTTA	**470898**
80TX343	COTTA	**470605**!
80TX410	COTTA	**416125**!
80TX411	COTTA	240735
80TX483	COTTA	**416921**!
80TX547	COTTA	**415449**!
80TX571	COTTA	**472016**
80TX572	COTTA	**471138**!
80TX660	COTTA	**415483**
80TX683	COTTA	**471138**!
80VX1306	COTTA	J1121
80VX1322	COTTA	J1103
80X100X10	NATL	228010
80X100X10SC	TRSCM	80X100X10!
80X100X10TC	TRSCM	80X100X10!
80X105X10ASN	ISP	80X105X10
80X105X13SC	TRSCM	80X105X13!
80X105X13TC	TRSCM	80X105X13!
80X105X14	NATL	80X105X13!
80X110X10	NATL	80X110X12
80X110X10SC	TRSCM	80X110X10
80X110X10TC	TRSCM	80X110X10
80X110X12SC	TRSCM	80X110X12
80X110X12TC	TRSCM	80X110X12
80X116	COTTA	**471192**
80X120X10ASN	ISP	80X120X10
80X120X13	SIMRT	80X120X13
80X120X13SC	TRSCM	80X120X13
80X120X13TC	TRSCM	80X120X13
81.96501.0410	MAN	226001
810	UNIVE	**417567**
8100	C-R	**474253**!
810041	EL-PA	**473225**!
810090	EL-PA	**412119**!
81040	SUPER	**471141**!
81040	TRACN	**471141**!
810422	AM HO	**416865**!
810427	AM HO	**417247**!
810441	AM HO	J1134
810442	AM HO	J1136
810510	SUPER	**413247**!
810510	TRACN	**413247**!
810513	SUPER	**472016**
810518	SUPER	455290
81060	GRAM	**473226**
810678	WILYS	340210
810691	WILYS	**471652**
8107125	GMC	**417316**!
8108	C-R	**474253**!
8108A	C-R	200600
8109	C-R	**474253**!
810915	WILYS	350909
810915	WILYS	**471224**!
810943	WILYS	**471765**!
811011C1	IH	204029
811011C1	IH	204507!
81101429	BUC-E	**416107**!
81101429	BUC-E	455073
811035	C-W	**473460**
811035	WOOL	**473460**
8110351	AMC	**473228**
8110371	AMC	**472164**!

! Industrial Size/Type * Minor Width Difference

= The U.S. customer service number is 877-4-TIMKEN. The Canadian customer service numbers are 800-565-4927 (English) and 800-565-0438 (French-Canadian).

Mfr. No.	Name	Zero Duplication or Recommended Industrial
8110486	AMC	**471466**!
8111601	AMC	**471267**!
81122	GRAM	**471820**
8112404	AMC	**471267**!
8113A	C-R	**417344**!
8117	SPG	8610
812	UNIVE	**415128**
8120358	AMC	**471766**!
812041	AM HO	**417247**!
812057	AM HO	**455480**!
812059	AM HO	**415960**
8120839	AMC	**471539**
8120977	AMC	8935S
8120978	AMC	7300S
8120982	AMC	341022
8121	SPG	8121S
812103	MICH	**417022***
8121037	UNIVE	**417022***
8121246	GMC	**473458**!
8121397	AMC	722108
8121399	WILYS	**472397**!
8121781	AMC	710068
8121M	BRAD	**470380**!
8122404	AMC	**472258**
8122671	AMC	7300S
8122671	CHRYS	2465
8122739	AMC	2506
8122838	AMC	331228H
8122839	AMC	331227H
8123077	AMC	**473229**
812335	CUSH	**473228**!
812335	O-M	**473228**!
81240	C-R	**455123**
81245	C-R	**455123***
81246	C-R	**455123***
8124630	AMC	5131
8124832	AMC	5131
8124869	AMC	331227H
8124881	AMC	3638
8124893	AMC	9613S
81250	C-R	**455123**
81251	C-R	**455123**
812517	SHOV	**455297**
8125718	AMC	3638
8127231	GMC	**471554**!
8127350	AMC	722109
8127387	AMC	9613S
8127391	AMC	3638
8127472	AMC	313156
8128013	AMC	2443
8128016	AMC	222820
8128016	AMC	28X40X7!
8128797	AMC	**471539**
8129096	AMC	2300
8129A	C-R	**415034**!
812W34-L	C-R	5410
8130259	AMC	3476
8130762	AMC	**471737**
8130808	AMC	**472572**
8130810	AMC	**472572**
8130870	AMC	3173
8130870	AMC	710928
8130982	AMC	341022
8130A	C-R	**471567**!
8131286	COC	**470354**
8131669	AMC	711552
8131674	AMC	**471466**
8131684	AMC	3173
8131684	AMC	710928
8132218	AMC	3698
8132221	AMC	9845
8132422	COC	**473243**
8132504	AMC	3173
8132504	AMC	710928
8132672	AMC	**472439**
8132779	AMC	7412S
813281	O-M	**474256**
813282	CUSH	**471643**!
8132822	AMC	483793
8132957	AMC	**473442**!
8133432	AMC	**472572**
8133528	AMC	3638
8133529	AMC	313156
8133643	AMC	341022
8134012	AMC	2506
8134206	AMC	421
8134216	AMC	**472319**
8134446	AMC	710046
8134478	AMC	3173
8134478	AMC	710928
8134568	AMC	PSK-1
8134587	AMC	474127
8134680	AMC	710058
8135	DAVEY	**472185**!
813620	C-R	**417298**
813620	GR-DV	**417298**
813620M1	C-R	**417298**
813674	CUSH	7399S!
813674	O-M	7399S!
8137148	COC	**323138**!
8137328	COC	**415697**!
8137328	COC	455547
8137329	COC	6592S=
8137391	AMC	**471652**
8137391	AMC	482208!
8138013	AMC	2443
8139	ALLCH	**415995**!
8139	TRAC	**415995**!
813W620	C-R	**417298**
814	UNIVE	455129*
8140	C-R	470515
814477	CUSH	**472475**
814477	O-M	**472475**
814488	CUSH	**473227**!
8145	C-R	471686
8145	CHAMP	**416137**
814634	SPICE	**330385**!
814686	WHITE	**472179**
81473	C-R	JV1802=
81474	C-R	JV1120=
81475R91	IH	**471827**
81476R91	IH	**471827**
814796	WHITE	**470625**!
814797	WHITE	**470625**!
81480	EATON	722250
814816	WHITE	**415991**
814F	OSHKO	**471820**
81516H	IH	**472560N**!
815177	CUSH	**470625**!
815177	O-M	**470625**!
815187	CUSH	**471571**
815187	O-M	**471571**
815219C91	IH	200752
815405637	AUDI	58X72X8
81540R91	IH	240698
815497	WHITE	**416070**
815816	CUSH	**471766**!
815947	WHITE	**416070**
8160	C-R	**471645***
8160S	NATL	**471827**!
816105	MICH	**417604***
8161050	UNIVE	**417604**
81673	EATON	712625
81674	EATON	712375
8167A	C-R	**472164**!
8169240AA019	GE	**471472**!
8169240AAP3	GE	**330385**!
8169240AD10	GE	**471267**!
8169240AD7	GE	**481537**
8169240AD9	GE	**471267**!
8169240ADP1	GE	**470954**!
8169240ADP2	GE	340787
817	GREEN	240731
8173-18-216	VILA	710348
817518	WHITE	240414
8178	C-R	**471645**!
817960	WHITE	**471442**!
8180	C-R	**471645**
8181N	SPG	**472070**
818604	WHITE	**417181**!
81886	EATON	**415483**
8189	C-R	**471645**
8190	C-R	**471645**
8190535	GMC	**416271**!
8190536	GMC	55431=
8190A	C-R	**472924**!
8193A	C-R	**415449**!
819412	WHITE	240731
819619	WHITE	**415036**
819685	WHITE	6649
819704	WHITE	**417316**!
819723	WHITE	**416888**!
819819	WHITE	**417344**!
81982	CATER	**412119**
819891	WHITE	**417344**!
81D6	WHITE	**417191**
81D6	WHITE	456585
81DT7A248A3A	FORD	2658
81SM6700A4A	FORD	3771
81SM6701A4A	FORD	3772
81SM6K292A4A	FORD	3774
81T3591	FORD	**474278**!
81T3591A	FORD	**474278**!
82-2003	MCCOR	16213
82-2005	MCCOR	16203
82-2006	MCCOR	16205
82-2008	MCCOR	16200
82-2010	MCCOR	16211
82-2011	MCCOR	16206
82-2014	MCCOR	16209
82-2017	MCCOR	16212
82-588150	BUC-E	**471554**!
82-588250	BUC-E	240731
82-588252	BUC-E	240731
82-588330	BUC-E	**470625**!
82-588400	BUC-E	**416444**
82-588410	BUC-E	**412861**
82-588550	BUC-E	**417495**
82-588675	BUC-E	**417512**
82-588685	BUC-E	**417512**
82-588695	BUC-E	**472157**!
82-588695	BUC-E	**472157**
82-588705	BUC-E	**416888**!
82-588715	BUC-E	**415371**
82-588810	BUC-E	**415645**!
82-588810	BUC-E	455104
82-588960	BUC-E	**417362**!
82-589215	BUC-E	**417298**
82-589750	BUC-E	**417598**
82-589760	BUC-E	**455121**
82-590878	BUC-E	**417600**
82-591110	BUC-E	**417602**!
82-591665	BUC-E	**417604**
82-591815	BUC-E	455129
82-591847	BUC-E	**415090**
82-591875	BUC-E	**455462**
82-591953	BUC-E	**417606**
82-591956	BUC-E	55222=
82-591959	BUC-E	55239=
82-591960	BUC-E	55223=
82-592105	BUC-E	**415482**
82-8714	BUC-E	**471821**!
82-87259	BUC-E	470086
82-8751	BUC-E	**415072**
8200294	EATON	**471272**!
82009	MC-CL	**470954**!
820106	MICH	**417567**
8201062	UNIVE	**417567**
820133	ADAMS	**471267**!
820133	LETN	450398
820133	LETN	**471267**!
820213C1	IH	**473317**
820225C1	IH	**471516**!
8204	SUPER	**415001**!
820442	EATON	3098=
820446	EATON	8635S
820494	ADAMS	**472299**
8205	C-R	471686*
8206	FULLE	**417316**!
8207	FULLE	**450084**!
8210512A	HARWA	82X105X12
821188	ADAMS	**472185**!
821276	ALLCH	470059N
8213	C-R	471337
821366	ALLCH	**471785**!
8214	C-R	471686*
821414C1	IH	**411253**!
8215	C-R	471686
821568	ALLCH	**471785**!
821610	WABCO	**471692**!
821614	LETN	**471652**
8218526	RCA	**471466**!
8219	HYST	**416271**!
8219B	HYST	**416271**!
82201	L&N	240462
822072	EATON	370048A
8220A	C-R	**473228**
8221321	GMC	**413247**!
8221418	GMC	**417210**!
822309	WOOL	**415991**
822309	WOOL	455146!
82246R1	IH	5M293
8225	C-R	471686
8226	C-R	471686
82307	AMC	5M445
8231	HYST	**473232**
8233A	C-R	**473238**
823521	GWI	**417488**!
8236	FULLE	**472299**
82363	GRAM	5778
82365	GRAM	40769S
8238	HYST	**415995**!
823D6	DIA	6864S
823D6	WHITE	6864S
8240087	RENAU	1062=
824097C91	IH	**472397**!
824107	MICH	**415128***
8241075	UNIVE	**415128***
8244	SPG	7131
824634	SPICE	100495
824634	SPICE	**417349**
824636	SPICE	**415995**!
824636	SPICE	**415995**!
82465612	TROS	**455584**
824878C91	IH	**416706**!
8249	BU-SP	**470530**!
8250	BU-SP	**473228**
8250	C-R	473412

! Industrial Size/Type * Minor Width Difference

= The U.S. customer service number is 877-4-TIMKEN. The Canadian customer service numbers are 800-565-4927 (English) and 800-565-0438 (French-Canadian).

Mfr. No.	Name	Zero Duplication or Recommended Industrial
825083	*WHITE*	5405
8251	*BU-SP*	**417316**!
82510	*C-R*	455475
82512	*C-R*	455475
82515	*C-R*	455475
8252	*BU-SP*	**470682**
82526	*C-R*	458009V
8253	*BU-SP*	**417344**!
82530	*C-R*	**415124**
8254	*BU-SP*	**415449**!
825426	*WHITE*	**415437**
825426	*WHITE*	**415437**!
82545	*EATON*	**415458**!
82545	*IH*	**415458**
82545H	*IH*	**415458**
82546H	*IH*	**410737**!
82548	*GRAM*	**471750**!
82560	*C-R*	**415124***
82562	*C-R*	**415124**
825624	*C-R*	**417596**
825624	*MINMA*	**417596**
82567	*C-R*	**416951**
8257	*C-R*	**417597**
82570	*C-R*	416422
82588300	*BUC-E*	240736
82588303	*BUC-E*	**473211**!
82588490	*BUC-E*	**470590**
825909	*WHITE*	**472560N**!
82592078	*BUC-E*	55228=
82592080	*BUC-E*	55228=
825933	*WHITE*	**471466**!
825HMS7	*C-R*	**417597**
825W34-L	*C-R*	5452
8260	*C-R*	473412
826010	*WHITE*	**417316**=
826047	*WHITE*	**415035**
826047	*WHITE*	**415035**!
826061	*WHITE*	6270
82607	*C-R*	210X250X15
82610	*C-R*	210X240X15
826361	*WHITE*	**472258**
826368	*ROCKW*	**472636**!
826388	*WHITE*	**472636**!
82668	*LK-BT*	JV1669=
826W34-L	*C-R*	5406
826W38-L	*C-R*	5408
8272A	*C-R*	**411253**!
827564	*WHITE*	6638S
827696	*GWI*	**472016**
827849	*BUC-E*	**417487**
827952	*GWI*	**471466**!
827953	*GWI*	**471224**!
827954	*GWI*	**471765**!
827955	*GWI*	**471766**!
827956	*GWI*	**473214**
827957	*GWI*	**473016**!
827958	*GWI*	**473229**
827959	*GWI*	**473010**
827960	*GWI*	**473232**
827961	*GWI*	**472185**!
827962	*GWI*	**472179**
827963	*GWI*	**470088**
827964	*GWI*	**472439**
827965	*GWI*	**414045**!
827966	*GWI*	**473238**
827967	*GWI*	**472924**!
827968	*GWI*	**472015**!
827969	*GWI*	**472016**
827970	*GWI*	**472636**!
827971	*GWI*	**413247**!
827972	*GWI*	**415449**!
827973	*GWI*	**417316**!
827974	*GWI*	55238
827975	*GWI*	**416654**!
827976	*GWI*	**415995**!
827977	*GWI*	**415995**!
827978	*GWI*	**417621**!
827979	*GWI*	**417539**!
8280	*C-R*	471729
8280	*FULLE*	**472439**
828054	*GWI*	240319
828055	*GWI*	**471413**
8281087	*UNIVE*	455129*
828160	*GWI*	**471138**!
828161	*GWI*	40566S
828171	*GWI*	**415449**!
828599	*GWI*	**472164**!
828604	*WHITE*	**417181**!
828605	*WHITE*	**415995**!
828628	*WHITE*	**415458**!
828630	*WHITE*	**411500**
828631	*WHITE*	**415041**
828688	*WHITE*	**471137**
828733	*BUC-E*	**473459**
828742	*BUC-E*	50254=
828954	*GWI*	240319
828W34-L	*C-R*	6649
829211	*WHITE*	**471192**
8293A	*C-R*	**417316**!
8294A	*C-R*	**415995**!
829522	*WHITE*	**330385**!
829638C1	*IH*	**476838**!
829653	*GWI*	**416107**!
829653	*GWI*	455073
829672	*GWI*	**417604**
829706	*WHITE*	**473227**
82X105X12	*SIMRT*	82X105X12
82X105X13SC	*TRSCM*	82X105X13
82X105X13TC	*TRSCM*	82X105X13
83000	*FWD*	**471619**!
83002	*FWD*	**416664**!
83003	*FWD*	**481864**
83004	*FWD*	**473214**!
83008	*FWD*	**450446**
8300992	*UNIT*	**450084**!
83012	*FWD*	**473229**
83013	*FWD*	**418028**
83015	*FWD*	**417343**!
830152	*SPICE*	**473459**
83015220	*UNIT*	**412119**!
83016	*FWD*	**415088**!
83016	*FWD*	**415088**
83017	*FWD*	**415437**
830179	*GWI*	**474278**!
83018	*FWD*	**418028**
83018	*FWD*	455137!
830180	*GWI*	**412119**!
830181	*GWI*	**411245**!
830187	*GWI*	**411245**!
83022	*FWD*	**415085**!
83022	*FWD*	456648
83025	*FWD*	**471835**!
83027	*FWD*	**413469**!
83029	*FWD*	**473448**
83030	*FWD*	**415458**!
83031	*FWD*	**415458**!
83032	*FWD*	**471652**
83036	*FWD*	**415389**
83037	*FWD*	**417316**!
83039	*FWD*	455556
83041	*FWD*	**471646**!
83042	*FWD*	**473231**!
83043	*FWD*	**415077**
83045	*FWD*	**455080**
83047	*FWD*	**473444**
83048	*FWD*	**411376**!
83049	*FWD*	**410496**!
8305	*C-R*	21X35X7
8305	*C-R*	21X35X8
83050	*FWD*	**415483**!
83051	*FWD*	**415187**
83052	*FWD*	**471270**!
83053	*FWD*	**471647**
83056	*FWD*	**471820**
83059	*FWD*	**471750**!
83061	*FWD*	**473462**
83065	*FWD*	**415559**
83068	*FWD*	**416167**!
83071	*FWD*	**414268**!
83072	*CLARK*	417537
83072	*FWD*	417537
83073	*FWD*	**417542**
83074	*FWD*	**417082**
83076	*FWD*	**417269**!
83078	*FWD*	**417211**!
83079	*FWD*	**417316**!
83080	*FWD*	416556!
83080	*FWD*	**472157**
83083	*FWD*	345035
83084	*FWD*	**417501**
83086	*FWD*	**417316**!
83089	*FWD*	**415058**
830918	*GWI*	**472572**!
830948	*WHITE*	**418028**!
83096	*FWD*	240319
83097	*FWD*	**417366**!
830980	*WHITE*	**415991**
830980	*WHITE*	455146!
830997	*WHITE*	55353
830998	*WHITE*	**472144**!
830W34-L	*C-R*	5313
8310	*C-R*	21X36X8
83100	*FWD*	**414268**!
831006	*GWI*	**416107**!
831006	*GWI*	455073
831007	*GWI*	**412473**!
831008	*WHITE*	**415960**!
83101	*FWD*	415060
83101	*FWD*	455060
83102	*FWD*	**415351**!
831048M1	*MASSE*	**482253**
831049M1	*MASSE*	480491
831056M1	*MASSE*	**473232**
831135	*WHITE*	**415725**!
831135M1	*MASSE*	240733
83114	*FWD*	**417316**!
831145M1	*MASSE*	**471276**
83115	*FWD*	**415991**
83115	*FWD*	**415991**!
83115	*WHITE*	**415725**!
83117	*FWD*	**450400**
831222M1	*MASSE*	**417343**!
831225M1	*MASSE*	240736
831236M1	*MASSE*	**473237**!
83124	*FWD*	**472150**
831245-MI	*MASSE*	340835
831247M1	*MASSE*	**471344**
83127	*FWD*	**415995**!
831281M1	*MASSE*	**470530**!
831282M1	*MASSE*	**470530**!
831289M1	*MASSE*	**481181**!
8313	*HYST*	**473449**
83130	*FWD*	**471341**!
83131	*FWD*	**417484**!
83132	*FWD*	**413246**
83136	*FWD*	**415001**!
83137	*FWD*	**455297**
83139	*FWD*	**417158**!
83140	*FWD*	**416706**
83141R91	*IH*	**472439**
83142	*FWD*	**455471**
831462M1	*MASSE*	**415483**!
831468M1	*MASSE*	**471504**!
83147	*FWD*	455509
831483M1	*MASSE*	**417158**!
8315	*NATL*	6815
83150	*FWD*	**415960**!
831522	*WHITE*	**472560N**!
831534	*WHITE*	**474278**!
831551	*WHITE*	**323138**!
831556M1	*MASSE*	**470354**
83158	*FWD*	**415449**!
83160	*FWD*	6402S=
831604M1	*MASSE*	473117
83161	*CATER*	**416130**!
83161	*FWD*	**470764**!
83161	*FWD*	50764
83163R91	*IH*	**473231**
83165	*FWD*	415899N
83165	*FWD*	**416624**
831660M1	*MASSE*	**471649**!
831689M1	*MASSE*	481345H=
831701M1	*MASSE*	240151
83174	*FWD*	**415458**!
83175	*FWD*	**415483**
83176	*FWD*	**417344**!
83177	*FWD*	**417181**!
831776M1	*MASSE*	**470530**!
83178	*FWD*	**417316**!
83180	*FWD*	**416278**
83183	*FWD*	**473227**
831833M1	*MASSE*	**472560N**
83184	*FWD*	**415302**
831899M1	*MASSE*	**416921**!
831900M1	*MASSE*	**473464**!
831900M1	*MASSE*	**473464**
831901M1	*MASSE*	**415437**
831902M1	*MASSE*	**472409**!
83191	*FWD*	415137!
83191	*FWD*	**418028**
831916M1	*MASSE*	**471424**!
83192	*FWD*	**417602**!
831926M1	*MASSE*	**473010**!
83193	*FWD*	**415035**!
83194	*FWD*	6663S
831942M1	*MASSE*	**415458**!
83195	*FWD*	415146!
83195	*FWD*	**415991**
831959M1	*MASSE*	**472258**!
83196	*FWD*	**416664**!
83199	*FWD*	J1119
831W34	*C-R*	6897=
83200	*FWD*	**472636**!
832000M1	*MASSE*	**471344**
83202	*FWD*	J1117
83203	*FWD*	**471271**!
83206	*FWD*	**415437**
83208	*FWD*	370086A
83208	*FWD*	9907=
832117M1	*MASSE*	**473228**
832125M1	*MASSE*	**474272**
83213	*FWD*	**416339**
83214	*FWD*	**472492**!
83215	*FWD*	**472070**
832245M1	*MASSE*	**470806**
832246M1	*MASSE*	**473197**
832247M1	*MASSE*	**471344**
832332M1	*MASSE*	**471271**!

! Industrial Size/Type * Minor Width Difference

= The U.S. customer service number is 877-4-TIMKEN. The Canadian customer service numbers are 800-565-4927 (English) and 800-565-0438 (French-Canadian).

Mfr. No.	Name	Zero Duplication or Recommended Industrial
832335M1	*MASSE*	**471224**
832358M1	*MASSE*	481371H=
832398M1	*MASSE*	240319
832416M1	*MASSE*	**416273**!
83249	*HYST*	40520S
832521	*GWI*	**417488**!
832586M1	*MASSE*	**473231**
832587M1	*MASSE*	**417433**
832612M1	*MASSE*	**416271**!
832623	*GWI*	**417509**
83270014	*TROS*	**416239**!
832731M1	*MASSE*	204035
832791	*WHITE*	**415449**!
8328	*FULLE*	**473244**
832830M1	*MASSE*	204013
832834M1	*MASSE*	**471267**!
832840M1	*MASSE*	**254270**
832841M1	*MASSE*	**416380**!
832841M2	*MASSE*	**416380**!
832880M1	*MASSE*	**471763**
832891M1	*MASSE*	7141=
832898	*MASSE*	7141=
8329	*HYST*	**470530**!
832931M1	*MASSE*	8020S
832954M1	*MASSE*	7790H
832954M2	*MASSE*	7790H
832954M3	*MASSE*	7790H
83298M1	*MASSE*	7141=
83300041	*AMC*	**471652**
83300041	*AMC*	482208!
833023M1	*MASSE*	200888=
833067M	*MASSE*	**473228**
833105M1	*MASSE*	**473228**
833136M1	*MASSE*	**415458**!
833190M1	*MASSE*	**472164**!
833191M1	*MASSE*	**471652**
833191M1	*MASSE*	482208!
833230M1	*MASSE*	**471554**!
833236	*MASSE*	**417357**=
833236M1	*MASSE*	**417357**=
833237M1	*MASSE*	**416921**!
833239M1	*MASSE*	**410737**!
833243	*MASSE*	**416288**!
833243M1	*MASSE*	**416288**!
833245M1	*MASSE*	415146!
833245M1	*MASSE*	**415991**
8332959	*GMC*	**471554**!
833302M1	*MASSE*	**417433**!
833303M1	*MASSE*	**471195**!
833342M1	*MASSE*	8521S
833355M1	*MASSE*	200763
833358M1	*MASSE*	481371H=
833380M1	*MASSE*	**471643**!
833381M1	*MASSE*	**471255**!
8333962	*GMC*	**473367**!
8333962	*GMC*	**473367**
833415M1	*MASSE*	6590S
833482M1	*MASSE*	41461S
8335	*SUPER*	**411253**!
833675M1	*MASSE*	**416664**!
833686M1	*MASSE*	**416125**!
833687M1	*MASSE*	**473473**
833691M1	*MASSE*	456967N=
833718M1	*MASSE*	**473454**
833776M1	*MASSE*	**416271**!
833776M2	*MASSE*	**416271**!
833777M1	*MASSE*	**470954**!
833796M1	*MASSE*	9249=
833800M1	*MASSE*	**472164**!
833801M1	*MASSE*	**410524**
833849M1	*MASSE*	**472164**!
833906	*GWI*	**473238**
833909M1	*MASSE*	**252277**
833910M1	*MASSE*	**471643**!
833911M1	*MASSE*	**471730**
833912M1	*MASSE*	**471267**!
833918	*WHITE*	**418028**!
8339811	*GWI*	**455079**!
834045M1	*MASSE*	**471391**!
834052M1	*MASSE*	**473228**
834055M2	*MASSE*	**471684**!
834064M1	*MASSE*	**415302**
834069M1	*MASSE*	**471870**!
834092M1	*MASSE*	**417484**!
834119M1	*MASSE*	200167=
834215M1	*MASSE*	**471835**!
834216M1	*MASSE*	**470565**!
834262	*WHITE*	**418028**!
834301M1	*MASSE*	**415263**
834316M1	*MASSE*	**450492**
834318M1	*MASSE*	**473227**!
834364M1	*MASSE*	**470954**!
83444R91	*IH*	**450084**!
834496M1	*MASSE*	9249=
834523M1	*MASSE*	**416278**
834556M1	*MASSE*	**417349**
83458R91	*IH*	**417316**!
834711M1	*MASSE*	**410102**
834793M1	*MASSE*	**415254**
834800M1	*MASSE*	**471341**!
834825M1	*MASSE*	416795N=
834831M1	*MASSE*	**412119**!
83483403	*WARNE*	370023A
834844M1	*MASSE*	**471271**!
8348591	*GMC*	**472157**!
8348591	*GMC*	**472157**
834952M1	*MASSE*	**416865**!
8350	*C-R*	21X38X8
83500723	*AMC*	5210
83500785	*AMC*	5210
83501389	*AMC*	4370N
83501814	*CHRYS*	221925
83501872	*AMC*	**474278**
83502508	*AMC*	**472572**
83502798	*AMC*	**472572**
83503010	*CHRYS*	**473212**!
83503063	*AMC*	9912
83503063	*CHRYS*	9912
83503108	*CHRYS*	1209
83503147	*AMC*	710046
83503390	*AMC*	5778
83503504	*AMC*	710202
83504946	*CHRYS*	714675
83505053	*CHRYS*	224462
83505290	*AMC*	**472572**
83506295	*AMC*	7412S
835062M1	*MASSE*	**412943**
8351582	*GMC*	476098N=
835171M1	*MASSE*	**471391**!
835274	*WHITE*	**417546**!
83533063	*CHRYS*	9912
8355A	*C-R*	**473473**
835614	*WHITE*	**416345**!
835614	*WHITE*	455033
835615	*WHITE*	**415066**
8356365	*GMC*	**415991**
8356365	*GMC*	**415991**!
835964	*WHITE*	**411253**!
835965	*WHITE*	**415023**
835967	*WHITE*	**415458**!
835968	*WHITE*	**416921**!
835969	*WHITE*	**415379**
835969	*WHITE*	**415379**!
836615	*WHITE*	**415066**
836647	*GWI*	**417262**!
8367711	*GMC*	5381=
8367712	*GMC*	5382=
8367713	*GMC*	J1123
8367714	*GMC*	**415025**
8367715	*GMC*	**416294**!
837003	*WHITE*	370003A
837012	*WHITE*	**417316**!
837017	*WHITE*	**415001**!
837200	*WHITE*	**415991**
837200	*WHITE*	**415991**!
837236	*WHITE*	**415072**
83739	*C-R*	**417022**
83740	*C-R*	**417022**
837445	*WHITE*	**471887**
837470	*WHITE*	6612S
837470A	*WHITE*	6612S
83750	*C-R*	**417022***
837512	*VIC*	**416888**
837512	*WHITE*	**416888**
837517	*WHITE*	5410
837517A	*WHITE*	5410
837548	*WHITE*	**472164**!
837556	*WHITE*	**472082**
83758R91	*IH*	**474278**!
837596	*WHITE*	**415371**
8376364	*CHRYS*	**417196**!
837705	*WHITE*	**416130**!
837739	*WHITE*	**410694**!
837952	*GWI*	**471466**!
8380	*C-R*	21X40X8!
8380	*C-R*	3388
8381138	*GMC*	**415437**
8381139	*GMC*	J1124
8381A	*C-R*	**472572**!
83823	*EATON*	370038A
8382454	*GMC*	**455480**!
838355	*WHITE*	370065A
838355	*WHITE*	376590A
838628	*C-R*	**455584**
838628M1	*C-R*	**455584**
8386386	*CONTI*	**471692**!
838860	*GWI*	**472409**!
838861	*GWI*	**470898**
839064	*WHITE*	**471466**!
839103	*GWI*	**472157**!
839103	*GWI*	**472157**
839129	*GMC*	5419
839495	*WHITE*	6872S
839496	*WHITE*	JV701
8395460	*CONTI*	**471192**
839594	*WHITE*	6872S
839784	*WHITE*	**471570**!
839809	*GWI*	**415234**!
839810	*GWI*	**415379**
839810	*GWI*	**415379**!
839811	*GWI*	**455079**!
839984	*WHITE*	370001A
83BG3K169B5A	*FORD*	224252
83BG3K169B5A	*FORD*	42X62X8!
83BG4676A1C	*FORD*	712011
83BM6700A4A	*FORD*	3394
83BM6701A4A	*FORD*	**473573**
83HM-6701-A6A	*FORD*	**415449**
83HM6700A1A	*FORD*	2012V
83SM6701A6A	*FORD*	3772
840009	*SPICE*	**471795**
84001	*MCCOR*	**481864**
84002	*MCCOR*	6356
840021100	*EATON*	**470898**!
840021200	*EATON*	**410308**!
840021200	*EATON*	473468
840030	*SPICE*	**473517**!
840030	*VIC*	**473517**!
8400544	*EATON*	**410308**
8400544-00	*EATON*	**410308**
84006	*MCCOR*	5070
840062	*TW-CO*	**471549**!
84011	*MCCOR*	**473459**
84012	*MCCOR*	5711
84016	*MCCOR*	**473473**
84018	*FITZ*	5070
84021	*MCCOR*	**473446**
84023	*MCCOR*	450073
84029	*FITZ*	**473450**!
84030	*MCCOR*	**470334**!
84031	*FITZ*	**416738**!
84031	*FITZ*	450096
84032	*FITZ*	**476838**!
84032	*MCCOR*	**450084**!
84033	*MCCOR*	**471141**!
84034	*MCCOR*	5957S
840344900	*EATON*	**415371**
84035	*FITZ*	**455008**
84035	*MCCOR*	5246
84036	*FITZ*	**473367**!
84036	*FITZ*	**473367**
84037	*MCCOR*	6090S
8403S	*NATL*	**473228**
84044	*FITZ*	**450084**!
840500	*WHITE*	8635S
84052	*MCCOR*	**471862**
84055	*FITZ*	5246
84060	*FITZ*	**471354**!
84062	*FITZ*	**473446**
840630900	*EATON*	**416294**!
84064	*MCCOR*	**470354**
84067	*MCCOR*	**410308**!
840689800	*EATON*	**416865**
840691	*GWI*	**415991**
840691	*GWI*	455146!
84092	*GWI*	480491
84070	*MCCOR*	**414045**!
84072	*MCCOR*	5M403
84073	*MCCOR*	5M81
84074	*FITZ*	**473448**
84074	*MCCOR*	**472439**
84075	*MCCOR*	**470530**!
8407505	*EATON*	370064A
840750500	*EATON*	370064A
840754800	*EATON*	370077A=
840776000	*EATON*	370094A
84078	*FITZ*	**450065**
840787	*GWI*	**418028**
840787	*GWI*	455137!
84080	*MCCOR*	50081
84085	*MCCOR*	**474281**!
840865	*GWI*	**472924**!
84097	*MCCOR*	470086
84098	*MCCOR*	450111
840RC	*SUL*	**415937**!
84102	*FITZ*	**471750**!
84103	*FITZ*	**411253**!
84104	*FITZ*	**474281**!
84105	*FITZ*	470059
84105	*FITZ*	**470380**!
841058100	*EATON*	**470565**!
841058300	*EATON*	**470565**!
84112	*MCCOR*	**413469**!
841125	*WHITE*	**415138**!
84114	*FITZ*	**473464**
84114	*FITZ*	**473464**!
84115	*MCCOR*	5M293
84118	*MCCOR*	**474265**

! Industrial Size/Type * Minor Width Difference

= The U.S. customer service number is 877-4-TIMKEN. The Canadian customer service numbers are 800-565-4927 (English) and 800-565-0438 (French-Canadian).

Mfr. No.	Name	Zero Duplication or Recommended Industrial
84119	MCCOR	5M89
84124	FITZ	6356
84124	MCCOR	**473444**
84125	MCCOR	**473467**
84126	FITZ	**473367**!
84126	FITZ	**473367**
84127	FITZ	**481864**
84128	MCCOR	**473458**!
84129	MCCOR	**472234**
84130	MCCOR	**473245**!
84131	MCCOR	**473450**
84134	FITZ	**414045**!
84136	FITZ	**471570**!
841369	WHITE	**416229**
84137	FITZ	**470334**!
84139	FITZ	**474265**
84140	MCCOR	5727
84142	FITZ	**450666**
84145	MCCOR	**411253**!
84146	FITZ	5711
84147	FITZ	**412943**
84148	MCCOR	**473464**!
84148	MCCOR	**473464**
84149	MCCOR	5778
84151	FITZ	**473213**!
84153	MCCOR	**473450**!
84154	MCCOR	**471316**
84156	MCCOR	5759=
84157	MCCOR	5756
84159	FITZ	**472924**!
84159	MCCOR	**410190**
84162	MCCOR	40973S
84164	FITZ	450111
84164	MCCOR	**470898**
84165	MCCOR	6064
84166	FITZ	**472394**
84166	MCCOR	**473441**
84167	FITZ	**450593**!
84172	FITZ	**473444**
84172	MCCOR	5836
841722	WHITE	**415551**
84174	FITZ	5727
84176	FITZ	**473444**
84176	MCCOR	**473179**!
84177	MCCOR	450274
84179	MCCOR	40369S
84180	MCCOR	40370S
84181	MCCOR	40286
84185	FITZ	**473441**
84186	MCCOR	5M289
84188	MCCOR	**411500**
84189	FITZ	450089
84191	FITZ	**472234**
84191	MCCOR	**473460**
84192	FITZ	6356
84195	MCCOR	5MR71
84196	MCCOR	50075=
84197	FITZ	**472287**!
84198	MCCOR	**412119**!
84199	FITZ	**474264**
84199	MCCOR	**472179**
84200	FITZ	**470530**!
84200	MCCOR	**473447**
842017	MASSE	**417344**!
842017M1	MASSE	**417344**!
84204	FITZ	**450143**
842048	WHITE	**417507**
842048	WHITE	**417507**!
84205	FITZ	**473367**!
84205	FITZ	**473367**
84205	MCCOR	480491
84207	MCCOR	6064
84208	MCCOR	5865
84209	MCCOR	**416738**!
84209	MCCOR	450096
84209S	MCCOR	**416738**!
84209S	MCCOR	450096
84210	MCCOR	**412920**!
84211	FITZ	**473467**!
84212	FITZ	**473459**
84212	MCCOR	**470898**
842125M1	MASSE	**417349**
84212S	FITZ	**473459**
84213	FITZ	5778
84213	MCCOR	**472185**!
84214	FITZ	**473228**
84214	MCCOR	**470682**
842147M1	MASSE	**417488**=
842148M2	MASSE	**415995**!
842149M2	MASSE	**416706**
84215	FITZ	**472016**
84218	MCCOR	**473471**
842189	GWI	**473445**
84219	MCCOR	200354
842193	GWI	**455406**!
84220	FITZ	450129
84220	FITZ	**472826**!
84220	MCCOR	**473238**
84222	MCCOR	5877
84223	FITZ	**415007**
842235M1	MASSE	**473459**=
84224	MCCOR	**472924**!
84226	MCCOR	**416738**!
84226	MCCOR	450096
84227	MCCOR	**472409**!
84230	FITZ	**415458**!
842309M1	MASSE	**415960**
84232	MCCOR	**473473**
842322M1	MASSE	**473231**!
84233	MCCOR	**470898**
84234	MCCOR	50501
84236	FITZ	**415449**!
84237	FITZ	5751
84238	MCCOR	**472179**
84241	FITZ	**415254**
84243	MCCOR	5924
84244	FITZ	**417073**
84246	FITZ	**473215**!
84246	MCCOR	**410737**!
84247	FITZ	**473467**!
84247	MCCOR	**415449**!
84247S	FITZ	**472015**!
84248	FITZ	**473450**
84249	FITZ	**473245**!
84249	MCCOR	**450307**
84250	FITZ	**473419**
84250	MCCOR	**410987**!
84251	FITZ	**474253**!
84253	FITZ	**473458**!
84254	MCCOR	**472636**!
84254S	MCCOR	**472636**!
84256	FITZ	**471224**!
84257	MCCOR	**472016**
842579M1	MASSE	**472164**!
84257S	MCCOR	**472016**
84258	FITZ	**473460**
84258	MCCOR	**472394**
84259	MCCOR	**472394**
84260	MCCOR	6064
84261	FITZ	**410190**
842610M1	MASSE	**472636**!
84262	FITZ	**471413**
84262	MCCOR	450467
84263	FITZ	**471820**
84263	MCCOR	**411253**!
84264	FITZ	40769S
842642	WHITE	240733
84265	MCCOR	50560
84266	MCCOR	**473457**!
84267	MCCOR	**450307**
84269	MCCOR	**411330**!
842692	WHITE	**471787**!
8426A	C-R	**472185**!
84270	MCCOR	**470530**!
84273	MCCOR	**415483**!
842739M1	MASSE	340853
84274	MCCOR	40566S
84277	MCCOR	**410308**!
84277S	MCCOR	**410308**!
84278	MCCOR	**471141**!
84279	FITZ	**473367**!
84279	FITZ	**473367**
84279	MCCOR	450415
8427A	C-R	**472287**!
84281	FITZ	450073
84281	MCCOR	493291
84282	FITZ	**415960**!
842824M1	MASSE	**471224**!
84283	FITZ	**415001**!
84284	FITZ	5756
84284	MCCOR	**472636**!
84285	FITZ	**473473**
84286	FITZ	**471316**
84286	MCCOR	**415449**!
84286S	MCCOR	**415449**!
84289	FITZ	**471820**
842900M1	MASSE	8126S
84292	FITZ	**471571**
84295	FITZ	240023
84297	FITZ	5778
84297	MCCOR	203034
84298	MCCOR	**471316**
84299	FITZ	**473214**!
84299	MCCOR	6098=
842A7	WHITE	**471316**
84300	MCCOR	7107A=
84301	MCCOR	**410708**
84302	MCCOR	**472185**!
84303	FITZ	**473440**!
84303	MCCOR	**470530**!
84304	FITZ	**472439**
84305	MCCOR	**472179**
84306	MCCOR	**473235**!
84308	FITZ	**413469**!
84308	MCCOR	**472636**!
8431	C-R	473414*
84310	FITZ	5797
84310	MCCOR	**415449**!
84311	MCCOR	**473460**
843111M1	MASSE	**470565**=
84313	MCCOR	**472179**
84315	MCCOR	40085S
84317	FITZ	**473450**!
84317F	DIA	6597S
84318	FITZ	**470354**
84318	MCCOR	40526S
843182	IVECO	713101
84319	MCCOR	**473232**
8431LPD	JN-MN	**417298**
8431LUP	JN-MN	**417298**
84320	FITZ	**450188**
84320	MCCOR	**473313**
84321	FITZ	**474278**!
84321	MCCOR	**470088**
84322	FITZ	**473447**
84323	MCCOR	**412943**
84324	FITZ	**455280**
84324	MCCOR	**410694**!
84324S	MCCOR	**410694**!
84325	MCCOR	**410102**
84326	MCCOR	**472572**!
84327	MCCOR	**473449**
84328	FITZ	**473234**
84328	MCCOR	**473463**
84329	MCCOR	**473236**!
84330	FITZ	**472560N**!
84330	MCCOR	50191
843301	WHITE	**471413**!
84331	MCCOR	**473235**!
843326M1	MASSE	**471192**
84333	MCCOR	**450273**
84335	FITZ	**412119**!
84335	MCCOR	**472144**!
84336	FITZ	**415034**!
84336	MCCOR	**472397**!
84337	FITZ	**471141**!
84337	MCCOR	**472015**!
843377M1	MASSE	**471831**!
84338	MCCOR	**473475**
84339	MCCOR	**450326**
84340	FITZ	**473179**!
84340	MCCOR	**412871**!
843413M1	MASSE	**472029**
84342	MCCOR	**451948**
84343	FITZ	**472179**
84344	FITZ	**455336**
84344	MCCOR	**471424**!
84345	FITZ	**455249**!
84346	MCCOR	**471341**!
84347	MCCOR	**472319**
84348	MCCOR	**450456**!
843485M1	MASSE	**352541**
8434A	C-R	**472258**
8435	C-R	473414*
843506M1	MASSE	355737=
84351	MCCOR	**450474**
84353	MCCOR	**410496**!
84355	MCCOR	450516
84356	FITZ	5836
84356	MCCOR	**471272**!
843565	WHITE	**471442**!
84357	MCCOR	**471887**
84358	MCCOR	450533
84359	MCCOR	**411376**!
8436	C-R	473414
84360	MCCOR	**415302**
84361	FITZ	6064
84363	FITZ	**473228**!
84364	FITZ	40370S
84365	FITZ	40369S
84366	MCCOR	5M356
843661M1	MASSE	**472354**!
84367	FITZ	5070
843671M1	MASSE	**416664**!
8436LUP	JN-MN	476281*
84372	FITZ	**411500**
84374	FITZ	6064
84375	FITZ	40286
84376	FITZ	450274
843788M1	MASSE	**471192**
843789M1	MASSE	**473517**!
8437LPD	JN-MN	455022
8437LUP	JN-MN	455022
84382	FITZ	**472179**
84382	MCCOR	6283S
84384	FITZ	5871
84384	MCCOR	**450776**!
843844M1	MASSE	**471271**!

! Industrial Size/Type * Minor Width Difference

= The U.S. customer service number is 877-4-TIMKEN. The Canadian customer service numbers are 800-565-4927 (English) and 800-565-0438 (French-Canadian).

Mfr. No.	Name	Zero Duplication or Recommended Industrial
84385	MCCOR	412920!
84388	FITZ	470898!
84388	MCCOR	470605!
84389	FITZ	473462
84389	MCCOR	413247!
843893M1	MASSE	472015!
8438LPD	JN-MN	417500
84390	FITZ	410987!
84390	MCCOR	473448
843908	WHITE	240735
84391	MCCOR	450446
84392	MCCOR	450463
84394	FITZ	473238
84395	FITZ	5877
84395	MCCOR	473462
84396	FITZ	410190
84396	MCCOR	473235
84397	FITZ	200354
84398	FITZ	472258
84399	MCCOR	6336S
8440	C-R	473414
844001176	IH	416404!
844001177	IH	417351!
844001180	IH	472924!
844001181	IH	415871
844001183	IH	417546!
84402	FITZ	6936S
84402S	FITZ	6936S
84403	FITZ	415041
84404	FITZ	340724!
84404	MCCOR	473179
84406	MCCOR	410987=
84408	FITZ	471827
84408	MCCOR	450068
84408S	FITZ	471827
84409	FITZ	470898
84409	MCCOR	472070
8441	C-R	473414
84410	MCCOR	450285
84411	FITZ	470625!
84412	MCCOR	450311
84414	MCCOR	472492!
84415	FITZ	415072
84415	MCCOR	473197
844159	HESST	471391!
84416	MCCOR	50528
84417	MCCOR	50631
84419	FITZ	470950!
84419	FITZ	6241S
84420	MCCOR	450776!
84421	MCCOR	416271!
84422	FITZ	471255!
84422	MCCOR	416664!
84423	FITZ	411253!
8442SS	JN-MN	471649!
84431	FITZ	5070
84431	MCCOR	471271!
84432	FITZ	470606!
84434	MCCOR	471272!
84435	MCCOR	413246
84437	FITZ	5924
84437	MCCOR	471316
84438	MCCOR	470806
84438S	MCCOR	470806
84439	MCCOR	450808
8443LPD	JN-MN	472319
8443LUP	JN-MN	472319
84441	FITZ	470898!
84443	FITZ	5921
84444	MCCOR	50501
84445	FITZ	5957S
84446	MCCOR	450143
844464	HESST	416071
84447	FITZ	471192
84448	MCCOR	200600
84449	MCCOR	80313
84452	FITZ	471554!
84452	MCCOR	473440!
84453	FITZ	471192
84454	MCCOR	410737!
84456	FITZ	473435
84456	MCCOR	472439
84457	FITZ	415001!
84458	MCCOR	472015!
84459	MCCOR	473241
84461	MCCOR	6547
84463	FITZ	471787
84463	MCCOR	40094S
84464	MCCOR	40097S
84465	MCCOR	472015!
84468	FITZ	471689!
84468	MCCOR	470898
84469	FITZ	472354!
84469	MCCOR	6532S=
8446A	C-R	80313
84470	FITZ	450400
84470	MCCOR	473238!
84471	MCCOR	471391!
84472	MCCOR	471870!
84473	FITZ	416654
84473	MCCOR	472492!
84474	FITZ	472016
84474	MCCOR	472287!
84475	FITZ	415001!
84475	MCCOR	472409
84475S	MCCOR	472409
84476	FITZ	450467
84476	MCCOR	471763
84477	FITZ	472636!
84477	MCCOR	471689!
84478	FITZ	415449!
84478	MCCOR	471271!
84479	FITZ	415960
84481	MCCOR	473459
84481H	MCCOR	473459
84483	FITZ	470530!
84483	MCCOR	415449!
84484	FITZ	472394
84484	MCCOR	411376!
84485	FITZ	474276!
84485	MCCOR	470565!
84486	FITZ	473227!
84486	MCCOR	416271!
84487	FITZ	411330!
84487	MCCOR	450803
84488	FITZ	416654!
84488	MCCOR	450655=
84489	FITZ	415483!
84490	MCCOR	450765!
84491	FITZ	410308!
84492	FITZ	450307
84492	MCCOR	470712!
84493	FITZ	471141!
84495	MCCOR	450313
84497	FITZ	353141!
84497	MCCOR	6180=
844974	WHITE	417171!
84498	MCCOR	411394!
84499	FITZ	6064
84499	MCCOR	473461!
8449SS	JN-MN	470950!
8449SS	JN-MN	6241S
844F-6700-AA	FORD	712101
844F-6C270-AA	FORD	712102
844RC	SUL	473238!
84500	FITZ	415995!
84500	MCCOR	200640
84501	MCCOR	473239
84501S	FITZ	6241S
84502	FITZ	40566S
84503	FITZ	2081
84503	MCCOR	450472!
8450413	GMC	470682
845045	WHITE	415302
84506	MCCOR	473474
84507	MCCOR	210914
84508	FITZ	471835!
84508	MCCOR	472924
84509	FITZ	473235
84509	MCCOR	210945
84510	MCCOR	472924!
84511	FITZ	417316!
84511	MCCOR	410987!
84512	FITZ	6465
84512	MCCOR	473234!
84513	FITZ	470354
84514	FITZ	6358
84515	MCCOR	40627S=
84516	FITZ	473228
845161	WHITE	417158!
84517	MCCOR	5MR1008
84519	FITZ	40769S
84519	MCCOR	470530!
84523	FITZ	6966S
84523	MCCOR	473442!
84524	FITZ	410825
84526	MCCOR	413479
84527	FITZ	40576S
84527	MCCOR	412119!
845274	WHITE	471570!
845275	WHITE	417181!
845276	WHITE	472179
84528	FITZ	473229
84529	FITZ	6270
8452A	C-R	471649!
84530	FITZ	5401
84530	MCCOR	450911N!
84530K	FITZ	5401
84532	MCCOR	6636S
84533	FITZ	493291
84533	MCCOR	410708
84534	FITZ	450335
84534	MCCOR	473179
84535	FITZ	455151
84536	FITZ	42763
84536	MCCOR	473016!
84537	MCCOR	472150
84538	FITZ	450776!
84538	MCCOR	450984
84539	FITZ	450776!
84539	MCCOR	416271!
84540	FITZ	6489
84541	FITZ	6465
84541	MCCOR	472164!
84542	FITZ	417516
84543	FITZ	472439
84544	MCCOR	470764!
84544	MCCOR	50764
84545	FITZ	417316!
84545	MCCOR	6785
84546	FITZ	415697!
84546	FITZ	455547
84546	MCCOR	416271!
84547	FITZ	3210
84547	MCCOR	410308
84548	MCCOR	205004
84549	MCCOR	6626S
84549K	FITZ	5403
84550	FITZ	471316
84551	FITZ	472439
84552	MCCOR	6781
84553	FITZ	472157!
84553	FITZ	472157
84553	MCCOR	470565!
84554	FITZ	473235!
84554	MCCOR	350942
84555	MCCOR	470530!
84556	FITZ	410059
84556	FITZ	470380!
84556	MCCOR	415449!
84556S	FITZ	410059
84556S	FITZ	470380!
84557	MCCOR	415449!
84558	MCCOR	473215!
84562	MCCOR	451078!
84563	FITZ	6489
84563	MCCOR	41081S=
84565	FITZ	240151
84565	MCCOR	7600S
84567	FITZ	50199S!
84567	FITZ	6863S!
84567	MCCOR	6818
84569	MCCOR	470898!
8457	C-R	473414*
8457	FULLE	418028!
84572	MCCOR	410708
84573	FITZ	471766!
84573	MCCOR	450269
84574	FITZ	456618
84574	MCCOR	415449!
84575	FITZ	415371
84576	FITZ	416865!
84576	MCCOR	6922=
84577	MCCOR	6808N
84578	FITZ	410737!
84578	MCCOR	473234!
8458	C-R	473414*
84580	FITZ	471862
84581	MCCOR	473467!
84582	MCCOR	416271!
84583	FITZ	412473!
84583	MCCOR	472354!
84584	FITZ	410737!
84584	MCCOR	6590S
84585	FITZ	417344!
84586	FITZ	330385!
84587	MCCOR	412040
84589	FITZ	473474
84590	FITZ	471504!
84590S	FITZ	471504!
84591	FITZ	6547
84592	MCCOR	450104
84593	MCCOR	450133
84594	MCCOR	474274
84595	FITZ	474264
84595	MCCOR	471271!
84596	FITZ	6638S
84599	FITZ	470954!
846	ROCKW	370037A
846	ROCKW	370338A
84600	MCCOR	450412
84602	FITZ	471267!
84602	MCCOR	5589$
84603	FITZ	472572!
84604	MCCOR	6960
84605	FITZ	472560N
84605	MCCOR	40316S
84606	FITZ	240356

! Industrial Size/Type * Minor Width Difference $ F-M Number Is Part Of A Kit
= The U.S. customer service number is 877-4-TIMKEN. The Canadian customer service numbers are 800-565-4927 (English) and 800-565-0438 (French-Canadian).

Mfr. No.	Name	Zero Duplication or Recommended Industrial
84606	MCCOR	6985
84607	FITZ	**415284**
84607	MCCOR	41075S
84607S	FITZ	**415284**
84608	FITZ	6635S
84609	MCCOR	**414045**!
84609K	FITZ	5405
8460LPD	JN-MN	55199=
8460LUP	JN-MN	55199=
8461	C-R	473414*
84610	FITZ	340797
84610	MCCOR	**410496**!
84611	FITZ	340413
84611	MCCOR	**410496**!
84612	FITZ	**350936**
84612	MCCOR	**470334**!
84613	FITZ	**416130**!
84613	MCCOR	**473179**!
84614	FITZ	**415043**
84614	MCCOR	44053
84615	FITZ	417267
84615	MCCOR	**455434**
84616	FITZ	455024
84616	MCCOR	6954S
84617	FITZ	**455151**
84617	MCCOR	44052
84618	FITZ	455037
84618	MCCOR	**410737**!
84618S	FITZ	455037
84619	FITZ	370036A
84619	MCCOR	**470487**!
8461LPD	JN-MN	**470088**
8461LUP	JN-MN	**470088**
84620	FITZ	**473232**!
84621	FITZ	**470625**!
84621	MCCOR	**473228**
84622	FITZ	**471750**!
84622	MCCOR	3103!
84623	FITZ	**471619**!
84623	MCCOR	7107A=
84624	FITZ	**471553**!
84624	MCCOR	5126
84625	MCCOR	7216
846256	WHITE	**471870**!
846275	WHITE	100495
846275	WHITE	**417349**
84628	MCCOR	203006!
8462LPD	JN-MN	**472016**
8462LUP	JN-MN	**472016**
84630	MCCOR	7044NA
84631	MCCOR	**451143**
84632	FITZ	**471442**!
84632	MCCOR	7018N=
84633	FITZ	**471466**!
84633	MCCOR	**472397**!
84634	FITZ	**410694**!
84635	FITZ	**473228**
84635	MCCOR	**473466**
84636	FITZ	**472409**!
84636	MCCOR	**471138**!
84638	FITZ	**473214**
84639	MCCOR	50266
8463LPD	JN-MN	**471554**!
8463LUP	JN-MN	**471554**!
84640	FITZ	**472179**
84641	FITZ	**472185**!
84641	MCCOR	**473464**
84642	FITZ	483054N
84643	FITZ	**473232**
84643	MCCOR	**415449**!
84644	FITZ	**471765**!
84644	MCCOR	451469
84645	FITZ	**410102**
84645	MCCOR	**472185**!
84646	MCCOR	**473232**!
84646K	FITZ	5408
84647	MCCOR	**410987**!
84647	MCCOR	450686
84648	FITZ	6245S=
84648	MCCOR	**413246**
84649	MCCOR	7381S
8464G	P-C	TCS45483
8464LPD	JN-MN	**471570**!*
8464LUP	JN-MN	**471570**!
8465	C-R	473414
84650	MCCOR	**473243**
84651	MCCOR	**331107N**
84651H	MCCOR	**331107N**
84651K	FITZ	5406
84651N	MCCOR	**331107N**
84652	FITZ	6636S
84653	MCCOR	**415302**
84654	FITZ	**415138**!
84654	MCCOR	6180=
84655	FITZ	415060
84655	FITZ	455060
84656	FITZ	**415351**!
84656	MCCOR	45827S
84657	FITZ	**450666**
84658	FITZ	455251H
84658	MCCOR	**473452**
84659	FITZ	50560
8465LPD	JN-MN	**470590**
8465LUP	JN-MN	**470590**
84660	FITZ	**474272**!
84663	FITZ	**473473**
84664S	FITZ	**470898**
84665	FITZ	**471267**!
84665S	FITZ	**471267**!
84666	FITZ	**480630**!
84667	FITZ	**416921**!
84668	FITZ	**410987**!
84668	MCCOR	7457N
84669	MCCOR	442380
84670	FITZ	**417316**!
84670	MCCOR	**471341**!
84671	FITZ	**416288**!
84671	MCCOR	7107A=
84672	MCCOR	**413246**
846724	GWI	**470625**!
84672S	FITZ	350942
84673	FITZ	**415058**
84673	MCCOR	3095
84674	FITZ	**417351**!
84674	MCCOR	5113
84674	MCCOR	7721!
84675	FITZ	**417621**!
84675	MCCOR	5573
84676	MCCOR	**473235**
84676S	WHITE	JV701
84676S	FITZ	**471344**
84677	FITZ	**471571**
84677	MCCOR	9150S
84678	FITZ	**415991**
84678	FITZ	455146!
84678	MCCOR	205044
84679	FITZ	**416271**!
84680	FITZ	**411376**!
84680	MCCOR	205015
84681	FITZ	**416892**
84681	MCCOR	**450639**
84682	FITZ	**416070**
84683	FITZ	**416664**!
84683	MCCOR	**413248**
84684	FITZ	**415991**
84684	FITZ	455146!
84684	MCCOR	340900
84685S	FITZ	**417506**
84686	FITZ	**417507**!
84686	FITZ	**417507**
84686	MCCOR	**471341**!
84687	FITZ	450482
84688	FITZ	**417484**!
84688	MCCOR	331301N
84689	FITZ	**410308**!
8468LUP	JN-MN	**410708***
84690	FITZ	200600
84690	MCCOR	5113
84690	MCCOR	7721!
84691	FITZ	**471646**!
84691	MCCOR	**415449**
84692	FITZ	450165
84692	FITZ	**471801**!
84693	FITZ	**471567**!
84694	MCCOR	**350936**
84695S	FITZ	9613S
84696	FITZ	**471821**!
84698	MCCOR	5589
84699	FITZ	**481073**
84699	MCCOR	**473473**
846D6	WHITE	**415697**!
846D6	WHITE	455547
847	EATON	370001A
847	EATON	380001A
84700	FITZ	**472179**
84700	MCCOR	**470898**
84701	MCCOR	**471271**!
84702	FITZ	6370N
84702	MCCOR	7751H
84703	MCCOR	**472016**
84704	MCCOR	8243
84705	MCCOR	8610
84706	FITZ	40973S
84706	MCCOR	331227H
84707	MCCOR	8168=
84708	FITZ	6643S
84708	MCCOR	**472070**
84709	MCCOR	9015S
8470LPD	JN-MN	**417484**!
8470LUP	JN-MN	**417484**!
84710	FITZ	6098=
84710	MCCOR	7044NA
84711	CATER	**471554**!
84713	MCCOR	6960
84714	FITZ	**412871**!
84714	MCCOR	**472082**
84715	FITZ	**417355**!
84715	FITZ	485497
84715	MCCOR	332062
84715S	FITZ	**417355**!
84715S	FITZ	485497
84716	MCCOR	8804S=
84716S	FITZ	**472164**
84717	FITZ	**474255**
84717	MCCOR	**472409**
84718	FITZ	**470712**!
84718	MCCOR	8610
84719	FITZ	**473227**
84719	MCCOR	8594S
8471A	C-R	**417316**!
84721	MCCOR	**470487**!
84722	FITZ	**472144**!
84722	MCCOR	**473179**
84723	MCCOR	**472082**
84724	FITZ	370002A
84725	FITZ	6532S=
84727	FITZ	**412920**!
84728	FITZ	**415035**!
84728	FITZ	**415035**
84730	FITZ	5951
84731	FITZ	240009
84732	FITZ	7107A=
84734	FITZ	**470605**!
84735	FITZ	**417223**
84736	FITZ	**473426**
84737	FITZ	**416125**!
84738	FITZ	**416888**!
84739	FITZ	**415995**!
84740	FITZ	**413247**!
847407	GWI	**476470**
847407	GWI	**476470**!
84741	FITZ	55030
84742	FITZ	**416345**!
84742	FITZ	455033
84743	FITZ	**415027**
84743	FITZ	**415027**!
84745	FITZ	**473016**!
84746	FITZ	240119
84747	FITZ	**471272**!
84748	FITZ	**417481**
84749	FITZ	6127
84750	FITZ	**471413**
84751	FITZ	**470530**!
84752	FITZ	45013S
84753	FITZ	**417343**!
84754	FITZ	**471649**!
84755	FITZ	**473449**
84756	FITZ	240319
84758	FITZ	45031S
84759	FITZ	**415036**
84760	FITZ	40085S
84761S	FITZ	**416271**!
84762	FITZ	**450039**
84763	FITZ	**471760**
84764	FITZ	**323138**!
84765	FITZ	**473010**
84767	FITZ	**417356**!
84767	FITZ	455188
84768	FITZ	5578
84769	FITZ	**471231**!
84770	FITZ	**481644**
84773	FITZ	**473234**!
84775	FITZ	455612=
84776	FITZ	**476470**
84777	FITZ	340771
84778	FITZ	**417349**
84779	FITZ	**471785**!
847799	WHITE	**415458**!
84780	FITZ	80313
84781	FITZ	**472397**!
84783	FITZ	6090S
84784	FITZ	450398
84784	FITZ	**471267**!
84786	FITZ	**470954**!
84787	FITZ	**471281**!
84788	FITZ	**450143**
84789	FITZ	6612S
847899	GWI	**473444**
8478LPD	JN-MN	**415284**
8478LUP	JN-MN	**415284**
84790	FITZ	**473231**!
84791	FITZ	**471413**!
84792	FITZ	**415187**
84793	FITZ	**416339**
84793	FITZ	455031!
84794	FITZ	**416332**!
84795	FITZ	**415991**
84795	FITZ	**415991**!

! Industrial Size/Type * Minor Width Difference

= The U.S. customer service number is 877-4-TIMKEN. The Canadian customer service numbers are 800-565-4927 (English) and 800-565-0438 (French-Canadian).

Mfr. No.	Name	Zero Duplication or Recommended Industrial
84796	*FITZ*	**471472**!
84797	*FITZ*	**471787**!
84798	*FITZ*	**416229**
847RC	*SUL*	**411253**!
848	*EATON*	**417505**
84803	*FITZ*	450269
84804	*FITZ*	**471526**!
84805	*FITZ*	**480630**
84806K	*FITZ*	5410
84807	*FITZ*	**350364**
84808S	*FITZ*	**471103**!
84809	*FITZ*	**450273**
84810S	*FITZ*	6626S
84811	*FITZ*	**472150**
84813	*FITZ*	**471763**
84814	*FITZ*	**417205**!
84815S	*FITZ*	**416297**
84816	*FITZ*	**472636**!
84817	*FITZ*	**472164**!
848178	*WHITE*	**480630**!
84819	*FITZ*	**473228**!
84820S	*FITZ*	**412473**!
848214	*WHITE*	**412943**
848225	*WHITE*	**417596**
84823S	*FITZ*	6754S=
84826S	*FITZ*	240470
84827S	*FITZ*	6760S
84828S	*FITZ*	6597S
84829S	*FITZ*	240736
84831K	*FITZ*	5452
84833	*CATER*	J1128
84834	*FITZ*	**417485**
84835S	*FITZ*	**470530**!
84836	*FITZ*	6781
84837S	*FITZ*	**415449**!
84838S	*FITZ*	**417134**
84839	*FITZ*	455614
848396	*WHITE*	**415449**!
8483LPD	*JN-MN*	**417181**!
8483LUP	*JN-MN*	**417181**!
8484	*C-R*	**473415**
84840	*FITZ*	**417269**!
84841	*FITZ*	415060
84841	*FITZ*	455060
84842	*FITZ*	**417353**!
84843	*FITZ*	455022
84844	*FITZ*	**415196**!
84846	*FITZ*	**415711**
84847	*FITZ*	**415394**
84848	*FITZ*	455625=
84849	*FITZ*	**455134**!
8485	*C-R*	**473415**
84850	*FITZ*	417537
84851	*FITZ*	**415350**
84852	*FITZ*	**417344**!
84853	*FITZ*	415064
84856	*FITZ*	**473234**!
8485LPD	*JN-MN*	**471649**!
8485LUP	*JN-MN*	**471649**!
84860	*FITZ*	6818
84862	*FITZ*	6815
848629	*WHITE*	**417621**!
84863	*FITZ*	**471795**
84864	*FITZ*	6840S
84865	*FITZ*	6985
84869S	*FITZ*	6855N=
84871	*FITZ*	**415960**!
84873S	*FITZ*	**473179**
84875	*FITZ*	41081S=
84877S	*FITZ*	**416271**!
84878S	*FITZ*	**451078**!
84879	*FITZ*	**410308**
8487M1	*C-R*	**416239**!
84881	*FITZ*	**473463**
84882K	*FITZ*	5458
848841	*WHITE*	**471554**!
84885S	*FITZ*	**470774**!
84886S	*FITZ*	6966S
84887S	*FITZ*	6241S
84888S	*FITZ*	7600S
848890	*WHITE*	**476838**!
84889S	*FITZ*	**471827**
84890S	*FITZ*	**470898**!
84891	*FITZ*	3103!
84892	*FITZ*	**415442**!
84892	*FITZ*	55442
84893	*FITZ*	55199=
84894	*FITZ*	**417350**!
84895	*FITZ*	6864S
84896	*FITZ*	6785
84897	*FITZ*	6930
84898	*FITZ*	9568
848984	*WHITE*	**417563**
84899	*FITZ*	6985
848BM7-Q6	*C-R*	**416239**!
849	*EATON*	370023A
84900S	*FITZ*	5589
84904	*FITZ*	340356
84906S	*FITZ*	**473234**!
84907S	*FITZ*	6952S=
84909	*FITZ*	**410987**=
84914	*FITZ*	**473228**
84916	*FITZ*	6960
84918	*FITZ*	205017
84919	*FITZ*	**473317**
84921S	*FITZ*	7686S
84922	*FITZ*	**470487**!
84923	*FITZ*	44053
84924	*FITZ*	6954S
84925S	*FITZ*	**473231**!
84927	*FITZ*	3103!
84927S	*FITZ*	**415449**
84928S	*FITZ*	**471195**!
84929S	*FITZ*	5072
8493052	*GMC*	**415984**!
84931	*FITZ*	7107A=
84932	*FITZ*	5126
84933	*FITZ*	7216
84935S	*FITZ*	321460
84936S	*FITZ*	203006!
84937	*FITZ*	5499=
84937K	*FITZ*	5499=
84938	*FITZ*	7044NA
84939	*AM WH*	470059
84939	*AM WH*	**470380**!
84939S	*FITZ*	5092
8493LPD	*JN-MN*	**471138**!
84940S	*FITZ*	**413246**
84941S	*FITZ*	3095
84942	*FITZ*	**410708**
84945S	*FITZ*	**473237**
84947S	*FITZ*	7456N
8494LPD	*JN-MN*	**471138**!
8494LUP	*JN-MN*	**471138**!
84950	*FITZ*	**451182**
849502	*WHITE*	**417171**!
849505	*WHITE*	5471
84958	*FITZ*	**410708**
8495LPD	*JN-MN*	**415254**
8495LUP	*JN-MN*	**415254**
8496	*C-R*	482069N
84968	*FITZ*	205044
8496LPD	*JN-MN*	**410496**!
8496LUP	*JN-MN*	**410496**!
84971S	*FITZ*	7338N
84972S	*FITZ*	**415449**
84974S	*FITZ*	**350936**
84975	*FITZ*	**350936**
84975S	*FITZ*	**350936**
84976S	*FITZ*	**474260**
84979S	*FITZ*	**472354**!
8497LPD	*JN-MN*	**455655**!*
8497LUP	*JN-MN*	**455655**!
84980	*FITZ*	7934S
84982S	*FITZ*	331301N
84984	*FITZ*	**470712**
84985	*FITZ*	**455189**
84986S	*FITZ*	**471821**!
84987	*FITZ*	7607
84988	*FITZ*	5113
84988	*FITZ*	7721!
84989S	*FITZ*	203008
84990S	*FITZ*	**470898**!
84992	*FITZ*	**416273**!
849935	*WHITE*	**417262**!
84993S	*FITZ*	6241S
84994S	*FITZ*	7886S
84995	*FITZ*	41257!
84997	*FITZ*	7994S
84998S	*FITZ*	9150S
84999	*FITZ*	8139
84G15	*OSHKO*	**416288**!
84GT7A248A3A	*FORD*	2658
84GX15	*OSHKO*	**416288**!
850	*EATON*	370036A
850	*EATON*	370349A
85000	*FITZ*	291295
8500058	*CYCLO*	**474274**=
8500058	*GR-DV*	**474274**=
8500059	*CYCLO*	**410825**
8500060	*CYCLO*	**416273**
8500061	*CYCLO*	**470898**
8500062	*CYCLO*	**473474**
8500063	*CYCLO*	**415483**
8500064	*CYCLO*	**417349**
8500065	*CYCLO*	**416332**!
8500066	*CYCLO*	411160N=
8500068	*CYCLO*	**476470**
8500068	*CYCLO*	**476470**!
8500072	*CYCLO*	**471651**=
8500078	*CYCLO*	**470954**!
8500079	*CYCLO*	**471224**!
85002S	*FITZ*	**471827**
85003S	*FITZ*	**482253**
85005	*C-R*	**417603**!
850050	*CLARK*	**471567**!
85006	*C-R*	**417603**!
850078	*CYCLO*	**470954**!
85009	*C-R*	**417603**!
850105	*CLARK*	**412473**!
850109M1	*MASSE*	**470712**!
85011S	*FITZ*	5337
85012	*C-R*	**417603**=
8501238	*CYCLO*	**471413**!
8501239	*CYCLO*	**471571**
8501240	*CYCLO*	**473231**!
8501240	*GR-DV*	**473231**=
8501241	*CYCLO*	**472397**!
85012S	*FITZ*	5092
85013S	*FITZ*	**472082**
85014	*C-R*	**417604**
85015	*C-R*	**417604**
85015S	*FITZ*	332062
85016S	*FITZ*	8804S=
850175	*CLARK*	**450446**
85017S	*FITZ*	9613S
850185M1	*MASSE*	**472015**!
850189	*GWI*	**415351**!
8501LPD	*JN-MN*	**417198***!
8501LUP	*JN-MN*	**417198**
85020	*C-R*	**417604**
85021	*C-R*	**417604***
850225M1	*MASSE*	**471785**!
850234	*GWI*	**415960**!
850237C92	*IH*	**473367**
850237C92	*IH*	**473367**!
850238C92	*IH*	**473445**=
85029S	*FITZ*	5111
85029S	*FITZ*	5111S
8502A	*C-R*	**473447**
8502LPD	*JN-MN*	55030*
8502LUP	*JN-MN*	55030
85030S	*FITZ*	**472082**
850315	*GWI*	**417205**!
850316	*GWI*	**417247**!
850333M1	*MASSE*	200354
8503LPD	*JN-MN*	**415263**
8503LUP	*JN-MN*	**415263**
85040S	*FITZ*	5111
85040S	*FITZ*	5111S
85048S	*FITZ*	3945
8504LPD	*JN-MN*	**417506**
8504LUP	*JN-MN*	**417506**
8505	*C-R*	22X31X6
85050S	*FITZ*	5390
85051S	*FITZ*	**415483**
850567	*CLARK*	50199S!
850567	*CLARK*	6863S!
85059S	*FITZ*	5112
85059S	*FITZ*	5112S
8505LPD	*JN-MN*	**415007***
8505LUP	*JN-MN*	**415007**
85063S	*FITZ*	5112
85063S	*FITZ*	5112S
8506LPD	*JN-MN*	**417488**!
8507	*C-R*	**416239**!
8507	*CABOT*	**416239**!
8507	*MINMA*	**416239**!
85070	*C-R*	**417604**
85071	*C-R*	**417604**
850716	*C-R*	**415867**
85079	*AM WH*	**473245**!
8507LPD	*JN-MN*	**417488**!
8507LUP	*JN-MN*	**417488**!
8507M1	*C-R*	**416239**!
8508	*C-R*	22X31X8!*
8508	*C-R*	22X32X7V!
85080	*C-R*	**417604***
85081044	*WARNE*	**473245**!
850812	*CLARK*	**473467**!
85085	*C-R*	**416394**
8508LPD	*JN-MN*	455820
8508LUP	*JN-MN*	455820
85090	*C-R*	**416394**
8509LPD	*JN-MN*	**417172***
8509LUP	*JN-MN*	**417172**
851	*EATON*	370065A
8510	*C-R*	222210
8510	*C-R*	22X32X7!
8510	*JAC*	**470954**!
8510LUP	*JN-MN*	473453
8511513C	*HARWA*	85X115X13
8513	*C-R*	22X35X7*
851350M1	*MASSE*	40401
85137	*NATL*	7208S
8515	*C-R*	22X35X7
851522	*WHITE*	**472560N**!
8516	*C-R*	222220

! Industrial Size/Type * Minor Width Difference

= The U.S. customer service number is 877-4-TIMKEN. The Canadian customer service numbers are 800-565-4927 (English) and 800-565-0438 (French-Canadian).

Mfr. No.	Name	Zero Duplication or Recommended Industrial
8516	C-R	22X35X7!
8516	C-R	22X35X7V!
851634	WHITE	**416654**
85165	GWI	**473462**
8517	C-R	22X35X7
85174	MCCOR	**470354**
851771	WHITE	**471231**!
8517A	C-R	**415960**!
85181S	FITZ	472341!
85182S	FITZ	3698
85182S	FITZ	5092
8519	C-R	222210
85191A	C-R	**471413**
85195S	FITZ	5576
85196S	FITZ	5414
85197S	FITZ	5115
85199S	FITZ	**473573**
8519H	SPG	**473179**
852	EATON	**415058**
8520	C-R	22X36X7
85200S	FITZ	3394
85201S	FITZ	473560N
85202S	FITZ	3103!
85203S	FITZ	2955
85204S	FITZ	3095
852052	WHITE	**471224**!
85205S	FITZ	5108
852084	WHITE	450073
852172	GWI	**472157**!
852172	GWI	**472157**
8522	C-R	222220
85221	AM WH	**471646**!
852482	WHITE	50199S!
852482	WHITE	6863S!
8527160	FAIRB	**471571**
852722	WHITE	**417254**
852723	WHITE	JV701
85274	HOUGH	**412119**!
853	EATON	370037A
853	EATON	370338A
8530	C-R	22X37X7
85305	WITTE	**472012**
853090	WHITE	**471442**!
853170	FIAT	224040
853170	FIAT	40X60X10!
8532S	SPG	370048A
853391	CLARK	**474278**!
85358A	HYST	5593=
853716	CLARK	**450173**
85375	EATON	924057
853D6	DIA	**455858**
853D6	WHITE	**455858**
854	EATON	370019A
8540	C-R	22X38X7!
8540	C-R	22X38X8
85404	NATL	200642
854090	WHITE	**415437**
854091	WHITE	**416339**
854091	WHITE	455031!
8541	C-R	22X38X7V
854276	WHITE	**472179**
8542A	C-R	**471649**!
8545	C-R	222238
8545	C-R	22X38X8!
85452	GRAM	**471827**
854580	GWI	**472157**
854580	GWI	**472157**!
854581	GWI	**416657**
854761	CLARK	**470354**
8548895	RENAU	35X50X8!
8548895	RENAU	3771
8548983	RENAU	35X50X8!
8548983	RENAU	3771
854945	WHITE	**415960**
854D1	DIA	450073
854D1	WHITE	450073
855	EATON	370124A
8550	C-R	222240
8550	C-R	22X40X7!
855021003	BU-SP	**471267**!
855022000	BU-SP	**471192**
855022001	BU-SP	**470625**!
8550220010	BU-SP	**472394**
8550220011	BU-SP	**471224**!
8550220012	BU-SP	**472144**!
855022002	BU-SP	**473228**
855022004	BU-SP	**472439**
855022005	BU-SP	**473197**
855022007	BU-SP	**471766**!
855022008	BU-SP	**471192**
855022009	BU-SP	**472185**!
855022010	BU-SP	**472394**
855022011	BU-SP	**471224**!
855022012	BU-SP	**472144**!
855022013	BU-SP	**471652**
855022013	BU-SP	482208!
855022014	BU-SP	**471766**!
855022015	BU-SP	**470625**!
855022016	BU-SP	**471224**!
855022017	BU-SP	**471192**
855022018	BU-SP	**472394**
855022019	BU-SP	7216
855022020	BU-SP	5711
855022021	BU-SP	**473238**
855022022	BU-SP	**472164**!
855022023	BU-SP	**473228**
855022024	BU-SP	**472439**
855022025	BU-SP	**471141**!
855022026	BU-SP	**472144**!
855022027	BU-SP	**451817**
855022028	BU-SP	**470625**!
855022029	BU-SP	**470625**!
855022030	BU-SP	**473228**
855022031	BU-SP	**473445**
855022032	BU-SP	**470682**
855022033	BU-SP	**471750**!
855022034	BU-SP	**473452**
855022035	BU-SP	**471141**!
855022036	BU-SP	**472185**!
855022038	BU-SP	**471984**
855022039	BU-SP	5778
855022040	BU-SP	**471192**
855022041	BU-SP	**470625**!
855023000	BU-SP	**472636**!
855023001	BU-SP	**411394**!
855023002	BU-SP	**417316**!
855023003	BU-SP	**473466**
855023004	BU-SP	**415007**
855023005	BU-SP	**470898**
855023007	BU-SP	**455005**
855023008	BU-SP	**471341**!
855023009	BU-SP	**470530**!
855023011	BU-SP	**417485**
855023012	BU-SP	**473464**
855023013	BU-SP	**415007**
855023014	BU-SP	**473466**
855023015	BU-SP	**417316**!
855023016	BU-SP	**472636**!
855023017	BU-SP	**415303**!
855023018	BU-SP	**412861**
855023019	BU-SP	**472636**!
855023021	BU-SP	**415449**!
855023022	BU-SP	**411394**!
855023022	KOEH	**411394**!
855023023	BU-SP	**473467**!
855023024	BU-SP	**415449**!
855023025	BU-SP	**417486**
855023026	BU-SP	**472924**!
855023027	BU-SP	**412119**!
855023028	BU-SP	**473473**
855023029	BU-SP	55469
855023030	BU-SP	**471271**!
855023031	BU-SP	**470530**!
855023033	BU-SP	**415302**
855023034	BU-SP	**473471**
855023035	BU-SP	**417484**!
855023036	BU-SP	**415001**!
855023037	BU-SP	**417344**!
855023038	BU-SP	**411348**!
855023039	BU-SP	**415483**!
855023040	BU-SP	**416271**!
855023041	BU-SP	**472492**!
855023042	BU-SP	**472397**!
855023043	BU-SP	**417480**!
855023044	BU-SP	40401
855023045	BU-SP	**473467**!
855023046	BU-SP	**472409**!
855024000	BU-SP	55309=
855024001	BU-SP	**415991**
855024002	BU-SP	**415991**
855024002	BU-SP	455146!
855024003	BU-SP	**415991**
855024004	BU-SP	**415995**!
855024005	BU-SP	**415379**
855024006	BU-SP	**415379**
855024006	BU-SP	**415379**!
855024008	BU-SP	**415379**
855024009	BU-SP	**415995**!
855024010	BU-SP	**476470**
855024011	BU-SP	**412473**!
855024013	BU-SP	**415937**!
855024014	BU-SP	**417351**!
855024015	BU-SP	**456105**
855024016	BU-SP	**418028**
855024016	BU-SP	455137!
855024017	BU-SP	**417349**
855024018	BU-SP	**416624**!
855024019	BU-SP	7208S
855024021	BU-SP	455178=
855024022	BU-SP	**417598**
855024023	BU-SP	**415995**!
855024024	BU-SP	**415559**
855024025	BU-SP	**415379**!
855024025	BU-SP	**415379**
855024026	BU-SP	**417191**
855024026	BU-SP	455165!
855024027	BU-SP	**417621**!
855024029	BU-SP	**476470**
855024030	BU-SP	**417210**!
855024031	BU-SP	**416125**!
855025000	BU-SP	**415138**!
855025001	BU-SP	**416888**!
855025003	BU-SP	**415196**!
855025006	BU-SP	415064
855025007	BU-SP	**472157**
855025007	BU-SP	**472157**!
855025008	BU-SP	**416892**!
855025009	BU-SP	455197N
855026000	BU-SP	**417254**
855026001	BU-SP	**415725**!
855026002	BU-SP	**415645**!
855026002	BU-SP	455104
855026003	BU-SP	**416865**!
855026004	BU-SP	**415645**!
855026004	BU-SP	455104
855026005	BU-SP	**415938**
855026006	BU-SP	**416107**!
855026006	BU-SP	455073
855026007	BU-SP	**416107**!
855026010	BU-SP	**416107**!
855026011	BU-SP	**417556**
855026012	BU-SP	**416666**
855027000	BU-SP	**417298**
855027001	BU-SP	55692=
855027002	BU-SP	**417562**
855027003	BU-SP	**415072**
855027004	BU-SP	**417596**
855028000	BU-SP	**415867**
855028001	BU-SP	**415867**
855028002	BU-SP	**415116**
855028003	BU-SP	**415867**
855028004	BU-SP	**455406**!
855028005	BU-SP	**415551**
855028006	BU-SP	**415551**
855028007	BU-SP	**415867**
855028008	BU-SP	**415867**
855028009	BU-SP	**416239**!
855028010	BU-SP	**416239**!
855029001	BU-SP	**415128**
855029003	BU-SP	55222=
855029005	BU-SP	**415482**
855029006	BU-SP	55222=
855029007	BU-SP	**415482**
855029011	BU-SP	**455462**
855029013	BU-SP	**415482**
855029014	BU-SP	**55301S**
855048	WHITE	**473467**!
855049	WHITE	**471192**
855054	WHITE	**411245**!
8551	C-R	22X40X7
8552	C-R	22X40X7V
855488	CLARK	450269
8555	C-R	22X42X10
8556	C-R	22X42X10
855657	CLARK	**471570**!
85571	WAUKE	**473205**
8558	C-R	222240
8558	C-R	22X40X7V!
856	EATON	**416892**
8560	C-R	22X45X7
8561	C-R	222267
8562	C-R	22X42X10
856227	CHRYS	**471316**
8563	C-R	22X45X7
85641	WAUKE	**330385**!
856798	GWI	**416892**!
8568	C-R	22X47X7
856811	WHITE	**416404**!
856821	WHITE	**471224**!
857	EATON	370131A
8570	C-R	222270
8570	C-R	22X47X7!
857031	CLARK	**480630**!
857112	CLARK	**416158**
8573	C-R	22X47X7
857317	CLARK	**471765**!
85778	CUMMI	**472164**!
85778	OLIVE	**472185**!
857824	WHITE	370006A
85785	CUMMI	**472409**!
85785	OLIVE	**472409**!
8579	FULLE	**472319**
858	EATON	370021A
8580	C-R	22X50X8
85805	GRAM	**473467**
8581A	C-R	**472636**!
858286	CLARK	**471442**!
8583	FULLE	**473231**!

! Industrial Size/Type

= The U.S. customer service number is 877-4-TIMKEN. The Canadian customer service numbers are 800-565-4927 (English) and 800-565-0438 (French-Canadian).

Mfr. No.	Name	Zero Duplication or Recommended Industrial
858345	*WHITE*	370023A
858358	*WHITE*	370036A
858358	*WHITE*	370349A
858366	*WHITE*	HU019A
858367	*WHITE*	730009
858368	*WHITE*	AR10+370020A
858370	*WHITE*	HU019A
858371	*WHITE*	730009
858372	*WHITE*	AR10+370020A
858375	*WHITE*	370023A
858379	*WHITE*	HU013A
858380	*WHITE*	733067
858381	*WHITE*	HU024A
858382	*WHITE*	730004
858383	*WHITE*	370001A
858386	*WHITE*	730016
858387	*WHITE*	HU042A
858388	*WHITE*	730016
858389	*WHITE*	HU036A
858390	*WHITE*	730003
8583AB	*CASE*	**415458**!
858402	*WHITE*	730010
85854	*WAUKE*	**352541**
8587	*CHERY*	**416107**!
8587	*CHERY*	455073
858701	*CLARK*	**450188**
85884	*WHELA*	**415645**!
85884	*WHELA*	455104
858848	*WHITE*	5494
858849	*WHITE*	370007A
858849	*WHITE*	7866S
858872	*WHITE*	**471413**
859	*EATON*	386025A
859	*EATON*	**416158**
859056	*WHITE*	**415960**
859059	*WHITE*	**455032**!
859060	*WHITE*	**416892**!
859063	*WHITE*	**417172**
859064	*WHITE*	**415437**
859064	*WHITE*	**415437**!
859164	*CHRYS*	6241S
85927R91	*IH*	340413
85928R91	*IH*	240414
859393	*GWI*	**472164**!
85964	*EATON*	904087
85965	*EATON*	904072
859984	*WHITE*	370001A
859985	*WHITE*	370001A
859995	*WHITE*	730001
859997	*WHITE*	730027
859998	*WHITE*	730008
859999	*WHITE*	730017
859D6	*WHITE*	456618
85X105X10SC	*TRSCM*	85X105X10!
85X105X10TC	*TRSCM*	85X105X10!
85X105X13SC	*TRSCM*	85X105X13
85X105X13TC	*TRSCM*	85X105X13
85X110X10	*ISP*	85X110X10
85X110X12SC	*TRSCM*	85X110X12
85X110X12TC	*TRSCM*	85X110X12
85X115X13	*SIMRT*	85X115X13
85X115X13AN	*ISP*	85X115X13
85X120X12SC	*TRSCM*	85X120X12
85X120X12TC	*TRSCM*	85X120X12
85X130X13SC	*TRSCM*	85X130X13
85X130X13TC	*TRSCM*	85X130X13
86-374A	*BUC-E*	**416077**
860	*EATON*	370005A
86000	*FITZ*	**415437**
86001	*FITZ*	7208S
860022	*WHITE*	**474278**!
86003	*FITZ*	**415437**
86003	*FITZ*	**415437**!
86004	*FITZ*	**416125**!
86006	*FITZ*	415137!
86006	*FITZ*	**418028**
86009	*FITZ*	6077
8601-4686	*MERCE*	717005
86010	*FITZ*	45637S
86011	*FITZ*	**415025**
86012	*EATON*	927112
86013	*EATON*	927113
8601478	*GMC*	**412871**!
860264R91	*IH*	40566S
860313R91	*IH*	40566S
8603362	*GMC*	**471442**!
860419	*WHITE*	**415995**!
8604M	*BRAD*	**472164**!
86055	*C-R*	J1112
860594	*WHITE*	**416956**
860594A3	*DIA*	**416956**
8606M	*BRAD*	**471466**!
86081	*C-R*	JV1210=
861	*EATON*	370003A
86105	*PUL*	HU013A
86106	*PUL*	HU009A
8610R	*SPG*	718610
8610RAR	*SPG*	718610
8612	*C-R*	340850
8612229	*GMC*	9613S
8612234	*GMC*	450285
8613	*HYST*	**471255**!
8614102	*GMC*	**473234**
861484	*CLARK*	**415196**!
8615094	*GMC*	**473234**
861513650	*SOLAR*	**471647**
861546	*WHITE*	370023A
861546	*WHITE*	6864S
8615885	*GMC*	**417158**!
8616280	*GM*	411
8616588	*GMC*	**473234**!
8617869	*GMC*	**473234**
8618478	*GMC*	7018N=
8618479	*GMC*	7018N=
8618697	*GMC*	450725N=
8618702	*GMC*	**473234**
8618702	*WILYS*	**473234**
8619560	*GMC*	7442H
8619867	*GMC*	342805
8620	*C-R*	240733
862051	*WHITE*	40094S
862052	*WHITE*	40097S
86208C	*DIA*	6635S
8621	*HYST*	**472397**!
86213	*AT SU*	292594
8621767	*GMC*	342805
8622268	*GMC*	7442H
862283	*WHITE*	**470565**!
8623056	*GMC*	8792S
8623743	*GMC*	9449
8623789	*GMC*	**473179**
8623789	*WILYS*	**473179**
8624	*C-R*	**254287**!
8624117	*AMC*	**411500**
8624117	*GMC*	**411500**
8624117	*WILYS*	**411500**
8625	*C-R*	5976S
8625	*CHERY*	**417967**!
862500	*WHITE*	HU009A
862501	*WHITE*	733067
8625571	*GMC*	**473179**
862570	*WHITE*	**415458**!
862571	*WHITE*	**473447**
8625757	*GMC*	9449
8625892	*GMC*	**473234**
8625893	*GMC*	5208
8625893	*GMC*	9449$
86260	*C-R*	**417567***
8626009	*GMC*	5208
8626009	*GMC*	9449$
8626901	*GMC*	5208
8626912	*AMC*	**473179**
8626916	*GMC*	**473179**
8627	*C-R*	**254287**!
8627	*C-R*	7840S
8627145	*GMC*	2457
8628054	*GMC*	3227
8629	*C-R*	7014S
8629	*STN-S*	**471766**!
8629A	*C-R*	**417159**
8630	*STN-S*	**473228**
8630921	*GMC*	3227
8631156	*GMC*	3543
8631158	*GMC*	3583
863154	*CLARK*	**473467**!
8631590	*GMC*	240385
8631950	*GMC*	3583
8631950	*GMC*	4072N
8632	*C-R*	7014S
8633	*C-R*	**254287**
863490	*WHITE*	**455480**!
8636A	*C-R*	470050
8637	*C-R*	340413
86374	*C-R*	**416077**
86374	*GR-DV*	**416077**
86374M1	*C-R*	**416077**
8637569	*GMC*	340849
863767	*WHITE*	730010
8637906	*GMC*	4072N
8638	*HYST*	**471567**!
8639	*HYST*	**471570**!
863916	*WHITE*	**474276**
864	*CEW*	224220
864	*CEW*	42X56X7!
864	*CEW*	494117
8640345	*GMC*	**473179**
8641	*C-R*	340413
8641300	*GMC*	**473179**
8641826	*GMC*	**473179**
8641878	*GMC*	**473179**
8641904	*GMC*	**473179**
8641952	*GMC*	**473179**
864317	*WHITE*	**410825**
864319	*GWI*	**472144**!
864321	*GWI*	**415007**
864324	*GWI*	**416865**!
8643792	*GMC*	4072N
8643931	*GMC*	5690
8643935	*GMC*	3459
8644	*C-R*	353132
864403	*WHITE*	476574N
8644637	*GMC*	4150N
8644637	*GMC*	710096
8644709	*GMC*	8792S
8645	*C-R*	340413
8645003	*GMC*	340847
864530R91	*IH*	**471442**!
8646	*C-R*	**471267**!
864643-C92	*IH*	370023A
864743-C92	*IH*	370023A
864784-C91	*IH*	370023A
8648	*C-R*	**471267**
8648394	*GMC*	3227
8649	*C-R*	353132
86496	*GRAM*	**472409**!
8650	*C-R*	**471267**!
86504R91	*IH*	**455008**
865070R91	*IH*	**411348**!
8651	*C-R*	**471267**!
8652	*C-R*	**471267**!
8653	*C-R*	**471267**!
8654	*C-R*	**471267**!
8654491	*GMC*	3227
8655031	*GMC*	9449
8655032	*GMC*	2457
8655122	*GMC*	**473179**
8657	*C-R*	**471267**!
8657163	*GMC*	8792S
8658	*C-R*	**471267**!
8659	*C-R*	**471267**!
8660	*C-R*	**471267**
8661	*C-R*	**471267**!
86614	*C-R*	220X250X15V
86615	*C-R*	220X250X15
8661602	*GMC*	4598
8662	*C-R*	**471267**!*
8662A	*C-R*	**473367**
8663	*C-R*	**471267**!*
8664	*C-R*	**471267**!
8664812	*GMC*	4072N
8665	*C-R*	**471267**
8665542	*GMC*	8611N
86657J	*DIA*	**417344**!
8666007	*GMC*	3543
8667	*C-R*	**471267**!
86684M	*DIA*	**416654**!
86689M	*IH*	**470712**!
86690	*IH*	**472185**!
866964	*BENDI*	200642
867	*HOLT*	6701=
8670	*C-R*	**471267**!
86702	*HOUGH*	**417269**!
8670218	*HOUGH*	**417269**!
8670218	*IH*	**417269**!
8670283	*GMC*	**473179**
8671	*C-R*	**471267**!*
867167	*CLARK*	**471442**!
8672	*C-R*	**471267**!*
867205	*CLARK*	**416271**!
867279	*WHITE*	**470954**!
867285	*WHITE*	**471570**!
8673	*C-R*	**471267**!
867335	*WHITE*	**417433**
8673526	*GMC*	4583
867367	*WHITE*	**416364**!
867385	*WHITE*	**415458**!
867385A	*DIA*	**415458**!
8674	*C-R*	**471267**!
8675730	*GMC*	9449
8675731	*GMC*	2457
8676	*C-R*	**471267**!
867633	*CLARK*	55358=
8677	*C-R*	440131!
867703	*WHITE*	**415988**
8677463	*GMC*	4333N
8677554	*GMC*	4674N
8677749	*GMC*	224840
8678	*C-R*	**471267**!
86783	*WHITE*	**471689**!
867887R91	*IH*	**471466**!
867888R91	*IH*	**473229**
8679	*C-R*	**471267**!
8679679	*GMC*	714679
8679744	*GMC*	710096
8680	*C-R*	**471267**!
8680	*CHERY*	**471192**
8680134	*KOEH*	**472179**
8680152	*KOEH*	**471808**!

! Industrial Size/Type * Minor Width Difference $ F-M Number Is Part Of A Kit
= The U.S. customer service number is 877-4-TIMKEN. The Canadian customer service numbers are 800-565-4927 (English) and 800-565-0438 (French-Canadian).

Mfr. No.	Name	Zero Duplication or Recommended Industrial
8680153	KOEH	471763
8680309	KOEH	470898
8680322	KOEH	471271!
8680518	KOEH	417191
8680541	GMC	4072N
868137R91	IH	7013S
868137R92	IH	7013S
8682	C-R	471267!
868251	WHITE	6886S
868276	WHITE	416921!
868287	CLARK	473467!
8683	C-R	471267!
8684	C-R	471267!
8685	C-R	471267!
8685111	GMC	224840
8685515	GMC	4072N
8686	PUL	B300
8686903	CONTI	472843
868695R91	IH	451948
868860R92	IH	HU024A
868861R1	IH	730004
8690	C-R	712270
8691	C-R	712270
8691260	ACF	415035
8691260	ACF	415035!
8691268	ACF	471271!
869235	WHITE	416297
869264	WHITE	410308
869550	IH	417356!
869550	IH	455188
8696	C-R	471570!*
86960	GRAM	50402
86964	WHITE	410308
8697	C-R	471570!
86978	GRAM	471224!
86HM6700A6A	FORD	3774
86HM6701A1A	FORD	473573
86SM6700A6A	FORD	3771
86SM6701A6A	FORD	3772
86TM6701A1A	FORD	473573
8700	C-R	471570!
870061	WHITE	470954
870080	WHITE	470954!
8702	C-R	471570!
870217	WHITE	471737
870224	WHITE	471795
870224B1	DIA	471795
870224D1	DIA	471795
8703	C-R	471570*
870349	WHITE	473179
8704	C-R	471570
870453	WHITE	471224!
870485C91	IH	370030A
8705	C-R	471570!*
87055S94	FORD	421
8706	C-R	471570!*
87061S94	FORD	427RR
8707	C-R	471570
87074	AMC	470530!
8708	C-R	471570!
870889C91	IH	370048A
870890C91	IH	370048A
8709	C-R	471570!
8710	C-R	471570!*
8711	C-R	471570!
8711329	CHRYS	340771
8712	C-R	471570!
871239R91	IH	471787
871240R91	IH	471787
871275	WHITE	471192
871281R91	IH	40576S
871303R91	IH	472560N
8714	C-R	472810!
871425	WHITE	416500
871425A	WHITE	416500
871425D5	DIA	416500=
8715	C-R	471570!
871601085	SOLAR	450398
871601085	SOLAR	471267!
871699004	SOLAR	470380!
871699046	SOLAR	471407
871699047	SOLAR	471413!
871699052	SOLAR	471619!
871699156	SOLAR	474274
871699330	SOLAR	471643!
871699348	SOLAR	471571
8717	C-R	471570!
87181	AM WH	412119!
8719	C-R	471570!
871951	WHITE	200642
87199	AM WH	455026
8720	C-R	471570!
8720035	BOWEN	415645!
8720035	BOWEN	455104
8720316	GMC	340823
8721	C-R	471570!
872164	WHITE	471224!
8722125045	HUB-C	471516!
8724S	SPG	7131
8725	C-R	471570!
8727	C-R	471570!
872797	WHITE	415854
872927	CLARK	474272!
872E-10	CLARK	473473
8731	HYST	473232
873157R91	IH	471341!
873158R91	IH	471341!
873190	WHITE	417316!
873190A	WHITE	417316!
873448	WHITE	417570
87355	HYST	415995!
87355	HYST	415995!
873637	FIAT	223535
87365	GRAM	473463
87378	HYST	416229
87379	HYST	473367
873793	WHITE	471224!
87380	HYST	473232!
87381	HYST	472394
87382	HYST	416404!
873837	WHITE	413248
8741	C-R	471570!
8741	HYST	470380!
8741225028	HUB-C	471224!
8741225036	HUB-C	471224!
8742125009	HUB-C	472164!
8742125026	HUB-C	473197
8742125027	HUB-C	470390
8742125045	HUB-C	471516!
8745	C-R	471570!
87467	BENDI	240816
874768	BENDI	340797
8748	C-R	471570!
8748	HYST	471264!
87480	C-R	486642*=
8748919	WILYS	471224!
8749999008	HUB-C	J1103
875	UNIVE	350435*
8752	DICO	203013
875242	WHITE	415458!
87535	C-R	415128
875380	C-R	455966
87540	C-R	415128
87541	C-R	415128*
87550	C-R	415128
87551	C-R	415128*
875560	CLARK	470059
875560	CLARK	470380!
8757	C-R	417564
87578	C-R	415116
87578M1	C-R	415116
876	NATL	G753
8760A	C-R	471224!
876235R91	IH	416130!
8763	C-R	350877
8763	C-R	471633
8764886	CONTI	474255
8764948	CONTI	7234=
8764A	C-R	410496!
8765	C-R	471633!*
876506R91	IH	471538!
87656	HYST	415449!
8766	C-R	471633!
876750	WHITE	100495
876750	WHITE	417349
8772	C-R	471633!
8773	C-R	471646!
8774	C-R	471646!
8777	NATL	9569S
8777	SPG	9569S
8779	C-R	471646!
87795	CROWN	471554!
8780	C-R	471646!
8780	HYST	416288!
87804	HYST	7042S
878155	WHITE	471553!
878163	WHITE	471765!
8782	C-R	471646!
878346	WHITE	476470
878349	WHITE	415991
878349	WHITE	415991!
8784	C-R	471646!
8785	C-R	471646!
8785A	F-R-H	416921!
8786A	F-R-H	415138!
8787	C-R	471646!
8787A	F-R-H	416888!
8788A	F-R-H	417563
8789A	F-R-H	416666
879573	WHITE	471141!
879579	WHITE	471466!
8796	C-R	471646!
8797	C-R	471646!
879981	BENDI	350909
879981	BENDI	471224!
88000	MCCOR	471413
88001	MCCOR	417073
88002	MCCOR	415001!
88011	MCCOR	5797
88017	MCCOR	455336
8801LPD	JN-MN	417539!*
8801LUP	JN-MN	417539!
8802	C-R	240215
88023	MCCOR	455310
88025	MCCOR	5965
88026	MCCOR	418028
88026	MCCOR	455137!
88028	MCCOR	415137!
88028	MCCOR	418028
88029	MCCOR	416288!
88035	HYST	470954!
88045	MCCOR	475348N
88046	MCCOR	417487!
88046	MCCOR	417487
88047	MCCOR	417171!
88049	MCCOR	417621!
88049S	MCCOR	417621!
8804LPD	JN-MN	455480!*
8804LUP	JN-MN	455480!
88055	MCCOR	417181!
8806	C-R	471646!
880620C91	IH	417269!
88068	MCCOR	415988
88068S	MCCOR	415988
88070	MCCOR	415254
88072	MCCOR	455008
88076	MCCOR	415007
88079	MCCOR	415960
88083	MCCOR	455280
88084	MCCOR	416654!
88085	MCCOR	455151
88088	MCCOR	415995!
8808LPD	JN-MN	417513
8808LUP	JN-MN	417513
88090	MCCOR	5921
88092	MCCOR	417316!
88093	MCCOR	417484!
88093S	MCCOR	417484!
88094	MCCOR	417344!
88095	MCCOR	417159
88096	MCCOR	417159
88097	MCCOR	415458!
8809LPD	JN-MN	415045!
8809LUP	JN-MN	415045!
88101	MCCOR	455151
88102	MCCOR	416654
88103	MCCOR	416273!
88104	MCCOR	417485
88105	MCCOR	415458!
88107	MCCOR	415001!
8810LPD	JN-MN	416137*
8810LUP	JN-MN	416137
8811010A	HARWA	88X110X12
88111	MCCOR	3210
88115	MCCOR	5971
88117	MCCOR	415899N
88117	MCCOR	416624
88118	MCCOR	6074
8811LPD	JN-MN	415064
8811LUP	JN-MN	415064
88121	MCCOR	417344!
88122	MCCOR	415960
88122S	MCCOR	415960!
88123	MCCOR	415995!
88126	MCCOR	417351!
88128	MCCOR	417492
88129	MCCOR	417316!
88130	MCCOR	415960
88133	MCCOR	45013S
88135	MCCOR	474272
88136	MCCOR	455005
88137	MCCOR	417344!
88137S	MCCOR	417344!
88138	MCCOR	455008
88139	MCCOR	416921!
88140	MCCOR	417487
88141	MCCOR	455015
88142	MCCOR	456105
88143	MCCOR	415085!
88143	MCCOR	456648
88144	MCCOR	417487
88145	MCCOR	416282
88146	MCCOR	417172
881467	WHITE	412027
88147	MCCOR	415991
88147	MCCOR	455146!
88148	MCCOR	417134
88149	MCCOR	417351!

! Industrial Size/Type * Minor Width Difference

= The U.S. customer service number is 877-4-TIMKEN. The Canadian customer service numbers are 800-565-4927 (English) and 800-565-0438 (French-Canadian).

Mfr. No.	Name	Zero Duplication or Recommended Industrial
881499	WHITE	415938
8814LPD	JN-MN	471649!
8814LUP	JN-MN	471649!
88150	MCCOR	55155=
88151	MCCOR	417488!
88152	MCCOR	412473!
88153	MCCOR	417492
88154	MCCOR	417481
88155	MCCOR	412861
88156	MCCOR	455253
88157	MCCOR	415259!
88158	MCCOR	455260
88159	MCCOR	417349
8815LUP	JN-MN	473233!
88160	MCCOR	417082
88161	MCCOR	415991
88161	MCCOR	455146!
88162	MCCOR	415984!
88163	MCCOR	417191
88163	MCCOR	456585
88164	MCCOR	55337
88165	MCCOR	415991
88165	MCCOR	455146!
88166	C-P	471466
88166	MCCOR	416404!
881661	WHITE	5487
88167	C-P	340413
88175	MCCOR	417344!
88176	HYST	415447
88177	MCCOR	416706
8818	TMTR	330385
88180	MCCOR	417316!
88180S	MCCOR	417316!
88183	MCCOR	416404!
88184	MCCOR	455079!
88185	MCCOR	415082
88186	MCCOR	415088
88186	MCCOR	415088!
88187	MCCOR	455144
88188	MCCOR	415350
88189	MCCOR	475384
8819	C-R	470590*
88191	MCCOR	2081
88192	MCCOR	6127
88193	MCCOR	476470
88197	MCCOR	476470!
88197	MCCOR	476470
88198	MCCOR	417343!
88199	MCCOR	410825
881991M1	MASSE	415483!
8819LPD	JN-MN	415090
8819LUP	JN-MN	415090
8820	C-R	470590
88202	MCCOR	417191
88203	MCCOR	46997S
88204	MCCOR	416294!
8820G	OSHKO	415001!
8820LPD	JN-MN	471413!
8821	C-R	470590
882125	WHITE	415449!
88214	MCCOR	416706!
88217	MCCOR	415991
88217	MCCOR	415991!
88218	MCCOR	415995!
88218	MCCOR	415995!
8821LPD	JN-MN	415437!
8821LPD	JN-MN	415437
8821LUP	JN-MN	415437
8821LUP	JN-MN	415437!
88221	MCCOR	5951
88222	MCCOR	473214
88223	MCCOR	5578
88224	MCCOR	417343!
8822A	C-R	472179
8822LPD	JN-MN	417362!
8822LUP	JN-MN	417362!
88230	MCCOR	5M867
88232	MCCOR	415995!
88232	MCCOR	415995!
88233	MCCOR	5M559
88235	MCCOR	417350!
88236	MCCOR	473010!
88237	MCCOR	416444
88238	MCCOR	455500
88239	MCCOR	418029!
8823LPD	JN-MN	415871
8823LUP	JN-MN	415871
8824	C-R	470590
88241	MCCOR	415442!
88241	MCCOR	55442
88242	MCCOR	417343!
88244	MCCOR	412473!
88245	MCCOR	5MR1009
88246	MCCOR	418028
88248	MCCOR	417316!
88249	MCCOR	416292
8824LPD	JN-MN	417606
8824LUP	JN-MN	417606
8825	C-R	470590
88251	MCCOR	55276=
88252	MCCOR	416956
88253	MCCOR	417484!
88257	MCCOR	415960
88258	MCCOR	412473!
88259	MCCOR	6575S
8825LPD	JN-MN	417525
8825LUP	JN-MN	417525
8826	TEKNI	471766!
88260	MCCOR	417134
88262	MCCOR	6846S=
88264	MCCOR	6754S=
88268	MCCOR	455566
8826LPD	JN-MN	417548*
8826LUP	JN-MN	417548
88271	MCCOR	415995!
88272	MCCOR	417486
88273	MCCOR	415234!
88274	MCCOR	415458!
88275	MCCOR	415146!
88275	MCCOR	415991
88277	MCCOR	5M643
88277S	MCCOR	410308!
88278	MCCOR	3103!
88279	MCCOR	415857!
88280	MCCOR	6930
88281	MCCOR	416706!
88283	MCCOR	415984!
88286	MCCOR	345146
88287	MCCOR	45825S
88288	MCCOR	40401
88292	MCCOR	417343!
88293	MCCOR	417480!
88294	MCCOR	415991
88296R	JOHND	472287!
88300	MCCOR	416500
88301	MCCOR	410825
88303	MCCOR	417621!
88304	MCCOR	411348!
88307	MCCOR	8976S
88308	MCCOR	418028
88309	MCCOR	8139
88310	MCCOR	7338N
88312	MCCOR	8370S
88313	MCCOR	417316!
88314	MCCOR	8429S
88319	EATON	370003A
8831LPD	JN-MN	471192
8831LUP	JN-MN	471192
883238	WHITE	417134
88326M	IH	411394!
88327	EATON	370121A
88327M	IH	450090
88343	AM WH	417491
883552	WHITE	410737!
883555	WHITE	5487
883557	WHITE	455858
8835LPD	JN-MN	417604
8835LUP	JN-MN	417604
8835S0	NATL	3983
8835SCR	SPG	8835S
8838378	RCA	240435
883865	WHITE	254287
883867	WHITE	456744N
8838LPD	JN-MN	455336*
8838LUP	JN-MN	455336
883935M4	MASSE	1037
8841LPD	JN-MN	417191
8841LPD	JN-MN	456585
8841LUP	JN-MN	417191
8841LUP	JN-MN	456585
8842	C-R	471137*
884299	WHITE	415483
884439C91	IH	415072
884579	WHITE	417354!
884581	WHITE	472179
884582	WHITE	415437
8845SS	JN-MN	476470
8846	C-R	471137
884615	BENDI	471267!
884634	SPICE	415023
8848	C-R	471137
8849	C-R	471137
88526A	HEIL	471760
88526A	HERCU	471760
885379	WHITE	6808N
885387	WHITE	410987!
885543	WHITE	6547
8855SS	JN-MN	471549!
8856SS	JN-MN	473405
8857	C-R	471137
8857LPD	JN-MN	416282
8857LUP	JN-MN	416282
8858LPD	JN-MN	410102
8860	C-R	471730
8860R	JN-MN	417247!
8861SS	JN-MN	473236!
88643	HYST	410737!
8864LPD	JN-MN	450474*
8864LUP	JN-MN	450474
8865	C-R	471730
8865LPD	JN-MN	415001!
8865LUP	JN-MN	415001!
8866	C-R	471730
8866A	C-R	474276!
8868LPD	JN-MN	455462
8868LUP	JN-MN	455462
886D6	WHITE	5951
8870	C-R	470645*
88702	C-R	416557
88710	C-R	416657*
887140	WHITE	HU013A
8871718	GMC	442380
8871719	GMC	416273!
8871720	GMC	416273!
8873095	GMC	416654
8873096	GMC	416654
8873427	GMC	730004
8873428	GMC	HU024A
8873LPD	JN-MN	473245!
8873LUP	JN-MN	473245!
8875	C-R	470645*
8875081	GMC	410686N
8875LUP	JN-MN	416380!*
88760	C-R	455129*
8876337	GMC	472179
8877993	GMC	6864S
8878141	BENDI	470590
8878142	BENDI	471785!
8880SSR	SPG	6638S
8881538	GMC	J1138
8881555	GMC	415938
8881715	GMC	472015!
8883	SPG	51322
8884561	GMC	470898
8885	C-R	8348N=
88870	GMC	473238!
888712	BUC-E	455117
888712	C-R	455117
888712M1	C-R	455117
888774	WHITE	6644
8887LPD	JN-MN	473448*
8887LUP	JN-MN	473448
88884A	HEIL	417316!
88884A	HERCU	417316!
8888S	SPG	9449
888910	C-R	416657
889197	WHITE	471870!
889246	WHITE	415995!
88958818	GMC	415449
889736C91	HOUGH	476470
889736C91	HOUGH	476470!
889736C91	IH	476470
889737C91	IH	417134
889738C91	HOUGH	417254
889738C91	IH	417254
889739C91	HOUGH	416041
889739C91	IH	416041
88973C91	IH	476470
8899R	JN-MN	473231
88AX-420	MACK	370003A
88AX1	MACK	473215!
88AX10	MACK	476838!
88AX100	MACK	417172
88AX100P3	MACK	417172
88AX101	MACK	50199S!
88AX101	MACK	6863S!
88AX102	MACK	473419!
88AX103	MACK	472015!
88AX104	MACK	473213!
88AX109	MACK	415449!
88AX11	MACK	470059
88AX11	MACK	470380!
88AX110	MACK	AR12+370033A
88AX110P1	MACK	417356!
88AX110P1	MACK	455188
88AX111	MACK	417196!
88AX113	MACK	471553!
88AX114	MACK	471570!
88AX115	MACK	471689!
88AX116	MACK	474281!
88AX117	MACK	473462
88AX118	MACK	473367!
88AX118	MACK	473367
88AX119	MACK	416738!
88AX119	MACK	450096
88AX12	MACK	473426
88AX120	MACK	472016
88AX120P2	MACK	472016

! Industrial Size/Type * Minor Width Difference

= The U.S. customer service number is 877-4-TIMKEN. The Canadian customer service numbers are 800-565-4927 (English) and 800-565-0438 (French-Canadian).

Mfr. No.	Name	Zero Duplication or Recommended Industrial
88AX120P3	MACK	472016
88AX121	MACK	411253!
88AX122	MACK	415001!
88AX123	MACK	415082
88AX124	MACK	455280
88AX125	MACK	415458!
88AX126	MACK	415960
88AX128	MACK	417354!
88AX129	MACK	415025
88AX13	MACK	417316!
88AX132	MACK	473426
88AX133	MACK	417481
88AX134	MACK	417539!
88AX135	MACK	417546!
88AX136	MACK	415483!
88AX138	MACK	415036
88AX138P3	MACK	415036
88AX13P3	MACK	417316!
88AX14	MACK	450040
88AX144	MACK	415995!
88AX145	MACK	473016!
88AX146	MACK	471567!
88AX147	MACK	5578$
88AX147P2	MACK	5578$
88AX149	MACK	417344!
88AX15	MACK	412119!
88AX150	MACK	456890
88AX151	MACK	416921!
88AX151P3	MACK	416921!
88AX152	MACK	416888!
88AX153	MACK	415058
88AX153P3	MACK	415058
88AX154	MACK	415437
88AX154	MACK	415437!
88AX155	MACK	417171!
88AX156	MACK	415394
88AX157P3	MACK	416024
88AX158	MACK	415021
88AX159	MACK	417621!
88AX159P2	MACK	417621
88AX16	MACK	471255!
88AX165	MACK	415995!
88AX165P2	MACK	415995!
88AX166	MACK	415302
88AX167	MACK	456105
88AX167P3	MACK	456105
88AX17	MACK	417273
88AX170	MACK	416706!
88AX170P2	MACK	416706=
88AX172	MACK	410102
88AX173	MACK	415551
88AX174	MACK	415035
88AX174	MACK	415035!
88AX175	MACK	472636!
88AX176	MACK	471224!
88AX177	MACK	416892!
88AX177P3	MACK	416892!
88AX178	MACK	415150!
88AX18	MACK	471554!
88AX182	MACK	471554!
88AX183	MACK	471567!
88AX184	MACK	471570!
88AX186	MACK	473367!
88AX186	MACK	473367
88AX187	MACK	470088
88AX188	MACK	473238
88AX189	MACK	472924!
88AX19	MACK	415035!
88AX19	MACK	415035
88AX190	MACK	416738!
88AX190	MACK	450096
88AX191	MACK	412943
88AX192	MACK	412119!
88AX193	MACK	415001!
88AX194	MACK	415995!
88AX195	MACK	415025
88AX196	MACK	415035
88AX196	MACK	415035!
88AX197	MACK	415041
88AX198	MACK	415960!
88AX198P2	MACK	415960!
88AX199	MACK	417298
88AX2	MACK	473458!
88AX20	MACK	415138!
88AX200	MACK	455253
88AX201	MACK	416239!
88AX202	MACK	415142
88AX203	MACK	415064
88AX204	MACK	473245!
88AX205	MACK	410987!
88AX206	MACK	415350
88AX207	MACK	415196!
88AX208	MACK	473435
88AX209	MACK	415960
88AX21	MACK	415351!
88AX210	MACK	471689!
88AX211	MACK	43086S
88AX212	MACK	415066
88AX214	MACK	416271!
88AX215	MACK	416288!
88AX215P3	MACK	416288!
88AX216	MACK	471688
88AX217	MACK	411500
88AX218	MACK	416921!
88AX219	MACK	476470
88AX21P3	MACK	415351!
88AX22	MACK	415041
88AX221	MACK	417181!
88AX222	MACK	100495
88AX222	MACK	417349
88AX223	MACK	416664!
88AX225	MACK	455123
88AX225P3	MACK	455123
88AX226	MACK	415196!
88AX226P2	MACK	415196=
88AX226P2	MACK	415196!
88AX229	MACK	417247!
88AX231	MACK	471553!
88AX231P2	MACK	471567!
88AX231P3	MACK	471567!
88AX232	MACK	417343!
88AX233	MACK	416158
88AX234	MACK	416167!
88AX236	MACK	471763
88AX239	MACK	455625=
88AX24	MACK	473423
88AX240	MACK	415060
88AX240	MACK	455060
88AX240P3	MACK	415060
88AX240P3	MACK	455060
88AX241	MACK	470954!
88AX241P3	MACK	470954!
88AX242	MACK	473453
88AX247	MACK	471570!
88AX247P3	MACK	471570!
88AX248	MACK	476470
88AX248P2	MACK	476470
88AX249	MACK	415938
88AX251	MACK	412871!
88AX253	MACK	417546!
88AX255	MACK	415960!
88AX257	MACK	415995!
88AX259	MACK	415991
88AX259P2	MACK	415991
88AX259P2	MACK	415991!
88AX260	MACK	417495
88AX260P1	MACK	417495
88AX261P2	MACK	100494
88AX261P2	MACK	476470!*
88AX263	MACK	471760
88AX266	MACK	455472=
88AX267	MACK	472924!
88AX268	MACK	471271!
88AX268P3	MACK	471271!
88AX269P3	MACK	471570!
88AX270	MACK	416865!
88AX271	MACK	416664!
88AX272	MACK	415449!
88AX272P2	MACK	415449
88AX273	MACK	415867
88AX274P2	MACK	418028!
88AX275	MACK	417604
88AX278	MACK	416029N!
88AX28	MACK	450593!
88AX281	MACK	472012
88AX281P2	MACK	472012
88AX282	MACK	471689!
88AX282P2	MACK	471689!
88AX282P3	MACK	471689!
88AX286	MACK	6635S
88AX286P3	MACK	455861=
88AX287	MACK	370003A
88AX288	MACK	5405
88AX289	MACK	5403
88AX290	MACK	5406$
88AX291	MACK	415995!
88AX291P2	MACK	415995!
88AX291P3	MACK	415995!
88AX292	MACK	415991
88AX292	MACK	455146!
88AX293	MACK	415995!
88AX3	MACK	472397!
88AX300	MACK	416049N=
88AX303P2	MACK	5578$
88AX306	MACK	472164!
88AX308	MACK	417362!
88AX311P3	MACK	471224!
88AX312	MACK	472070
88AX314P2	MACK	415897N=
88AX315	MACK	415995!
88AX316	MACK	455310
88AX316P3	MACK	455310
88AX317	MACK	7747=
88AX319P2	MACK	417484!
88AX321P3	MACK	470954
88AX322	MACK	415449!
88AX322P2	MACK	415449
88AX324	MACK	417022
88AX326	MACK	370019A
88AX327	MACK	416029N!
88AX327P2	MACK	416029N!
88AX328	MACK	417172
88AX331	MACK	254287
88AX331P3	MACK	254287
88AX334	MACK	415128
88AX334P3	MACK	415128
88AX337	MACK	443527*=
88AX34	MACK	457874
88AX340	MACK	416706=
88AX340P2	MACK	416706=
88AX341	MACK	415995!
88AX341P2	MACK	415995!
88AX342P2	MACK	410102=
88AX343P2	MACK	472016!
88AX344P2	MACK	412119=
88AX345P2	MACK	415001=
88AX346P2	MACK	415960
88AX347P2	MACK	417621!
88AX348P2	MACK	415991
88AX348P2	MACK	415991!
88AX349P3	MACK	240731
88AX350P3	MACK	343186
88AX353	MACK	472924!
88AX353P3	MACK	472924!
88AX354P2	MACK	416706
88AX355P2	MACK	415995!
88AX356P2	MACK	410102=
88AX357P2	MACK	472016
88AX358P2	MACK	412119
88AX359P2	MACK	415001
88AX360P2	MACK	415960!
88AX361P2	MACK	417621
88AX362P2	MACK	415146!
88AX362P2	MACK	415146N=
88AX362P2	MACK	415991
88AX363P2	MACK	417079=
88AX364P2	MACK	417158=
88AX365P2	MACK	416921=
88AX366P2	MACK	416404=
88AX367P2	MACK	455566=
88AX368P2	MACK	415389
88AX370P3	MACK	254270!
88AX371P2	MACK	417262=
88AX372	MACK	416892
88AX373	MACK	415058
88AX374	MACK	370057A
88AX375	MACK	416865
88AX376	MACK	370069A
88AX376	MACK	380069A
88AX378	MACK	416865
88AX379	MACK	370036A
88AX379	MACK	370349A
88AX380	MACK	370019A
88AX382	MACK	370069A
88AX382	MACK	380069A
88AX383P2	MACK	416294=
88AX385P3	MACK	471570!
88AX386P2	MACK	332134
88AX386P3	MACK	332134
88AX387P3	MACK	415294!
88AX388P2	MACK	481315N=
88AX390P2	MACK	472012
88AX391P2	MACK	415027
88AX392P2	MACK	455185N=
88AX393P3	MACK	416239!
88AX394P3	MACK	415867
88AX395P3	MACK	416039
88AX396P3	MACK	417022
88AX397P3	MACK	415128
88AX398P3	MACK	416100=
88AX4	MACK	471549!
88AX400	MACK	472012
88AX401P2	MACK	470898
88AX402	MACK	370069A
88AX402	MACK	380069A
88AX403	MACK	370069A
88AX403	MACK	380069A
88AX404	MACK	370069A
88AX404	MACK	380069A
88AX405	MACK	415058
88AX406	MACK	370019A
88AX407	MACK	416892
88AX408P1	MACK	470954!
88AX409P3	MACK	416951
88AX410P2	MACK	470954
88AX410P3	MACK	470954!
88AX415P3	MACK	471570!
88AX416P2	MACK	415449

! Industrial Size/Type * Minor Width Difference $ F-M Number Is Part Of A Kit
= The U.S. customer service number is 877-4-TIMKEN. The Canadian customer service numbers are 800-565-4927 (English) and 800-565-0438 (French-Canadian).

Mfr. No.	Name	Zero Duplication or Recommended Industrial
88AX417	*MACK*	**415294**!
88AX418	*MACK*	**415058**
88AX419	*MACK*	370033A
88AX421	*MACK*	**416892**
88AX424	*MACK*	370069A
88AX424	*MACK*	380069A
88AX425	*MACK*	370037A
88AX425	*MACK*	370338A
88AX427	*MACK*	370019A
88AX429P3	*MACK*	**471224**!
88AX432	*MACK*	370005A
88AX439	*MACK*	370023A
88AX440	*MACK*	**415991**!
88AX440	*MACK*	**415991**
88AX440P2	*MACK*	**415991**!
88AX440P2	*MACK*	**415991**
88AX440P4	*MACK*	**415991**
88AX441P3	*MACK*	**417278**
88AX442P3	*MACK*	**415294**!
88AX443	*MACK*	370173A
88AX444P2	*MACK*	415983N!
88AX448	*MACK*	**415058**
88AX450	*MACK*	370005A
88AX454	*MACK*	**472012**
88AX455	*MACK*	4489V=
88AX455	*MACK*	713750
88AX463	*MACK*	713750
88AX463	*MACK*	714489
88AX466	*MACK*	**415058**
88AX467	*MACK*	**416892**
88AX469	*MACK*	370048A
88AX469	*MACK*	380048A
88AX47	*MACK*	**415988**
88AX49	*MACK*	**415995**!
88AX49-P2	*MACK*	**415995**!
88AX5	*MACK*	**471137**
88AX50	*MACK*	**416706**
88AX51	*MACK*	**416706**!
88AX52	*MACK*	**412943**
88AX53	*MACK*	**411253**!
88AX54	*MACK*	**415991**
88AX54	*MACK*	455146!
88AX55	*MACK*	**417210**!
88AX55-P2	*MACK*	**417210**=
88AX56	*MACK*	**412473**!
88AX58	*MACK*	**455151**
88AX59	*MACK*	370036A
88AX59	*MACK*	370349A
88AX59P3	*MACK*	370036A
88AX59P3	*MACK*	370349A
88AX6	*MACK*	**470334**!
88AX61	*MACK*	**415995**!
88AX61P3	*MACK*	**415995**!
88AX62	*MACK*	**416666**
88AX63	*MACK*	**472572**!
88AX64	*MACK*	**410987**!
88AX65	*MACK*	**416865**!
88AX65P3	*MACK*	**416865**!
88AX66	*MACK*	**473245**!
88AX67	*MACK*	**473463**
88AX68	*MACK*	**471354**!
88AX69	*MACK*	5751
88AX7	*MACK*	**472924**!
88AX70	*MACK*	**416125**!
88AX71	*MACK*	455056
88AX72	*MACK*	**417269**!
88AX73	*MACK*	417516
88AX74	*MACK*	**455297**
88AX75	*MACK*	**476838**!
88AX756	*MACK*	J1289*=
88AX758	*MACK*	J1293*=
88AX75P1	*MACK*	**476838**!
88AX75P3	*MACK*	**476838**!
88AX76	*MACK*	**473426**
88AX76P3	*MACK*	**473426**
88AX77	*MACK*	370036A
88AX77	*MACK*	370349A
88AX79	*MACK*	**415645**!
88AX79	*MACK*	455104
88AX79P3	*MACK*	**415645**!
88AX79P3	*MACK*	455104
88AX7P3	*MACK*	**472924**!
88AX8	*MACK*	**450039**
88AX81	*MACK*	**473438**
88AX82	*MACK*	**472157**!
88AX82	*MACK*	**472157**
88AX83	*MACK*	**472185**!
88AX84	*MACK*	**416332**!
88AX84-P1	*MACK*	**416332**!
88AX84-P2	*MACK*	**416332**!
88AX88	*MACK*	**415001**!
88AX89	*MACK*	**415116**
88AX9	*MACK*	**473438**
88AX90	*MACK*	**470088**
88AX93	*MACK*	**471354**!
88AX93P3	*MACK*	**471354**!
88AX94	*MACK*	**417556**
88AX95	*MACK*	**417223**
88AX96	*MACK*	**411376**!
88AX97	*MACK*	**415437**!
88AX97	*MACK*	**415437**
88AX97P3	*MACK*	**415437**!
88AX97P3	*MACK*	**415437**
88AX98	*MACK*	**415350**
88AX99	*MACK*	**417563**
88AXB1	*MACK*	**416706**
88AXB2	*MACK*	**415001**!
88AXB21	*MACK*	416029N!
88AXB4	*MACK*	**416706**!
88AXB5	*MACK*	**415960**
88AXBF	*MACK*	**417621**!
88AXM	*MACK*	**415995**!
88AXT21	*MACK*	**416239**!
88G490	*LEYLD*	224470
88G490	*LEYLD*	44X72X10!
88G561	*LEYLD*	1873
88X110X12	*SIMRT*	88X110X12
88X110X12SC	*TRSCM*	88X110X12
88X110X12TC	*TRSCM*	88X110X12
890016C91	*IH*	**416380**!
8900LPD	*JN-MN*	**415284**
8900LUP	*JN-MN*	**415284**
8900S	*SPG*	6886S
8901R	*JN-MN*	**417562**
890475	*WHITE*	**470530**!
89070	*C-P*	**470954**!
8909	*HYST*	**470334**!
891002	*WHITE*	HU028A
891004	*WHITE*	HU034A
891015	*WHITE*	370001A
891033	*WHITE*	370001A
891034	*WHITE*	370001A
891035	*WHITE*	370001A
8910A	*C-R*	**415449**!
89121024	*RCA*	**470954**
89121027	*RCA*	**471224**
891437	*CHRYS*	5797
891448	*CHRYS*	**470354**
891448	*CLARK*	**470354**
891448	*MASSE*	**470354**
89185	*AM WH*	**416239**!
891944	*CLARK*	204013
8919LPD	*JN-MN*	**415090***
8919LUP	*JN-MN*	**415090**
8920	*FALKC*	**416664**!
8920	*FED*	**416664**!
8920200	*GMC*	473476
892066	*WHITE*	370007A
8921150B	*GMC*	**470954**!
8921301	*GMC*	455956H
8922045	*GMC*	**417344**=
8922045-B	*GMC*	**417344**=
8922046	*GMC*	**417344**=
8923654	*GMC*	**417550**
8923655	*GMC*	J2037=
8924374	*GMC*	**455134**
8924453	*GMC*	39904
892457	*WHITE*	5481
8924LPD	*JN-MN*	**471833**
8925LPD	*JN-MN*	417267
8925LUP	*JN-MN*	417267
8926135	*GMC*	357971V=
8926902	*GMC*	**415035**
89270	*BR-ST*	**473426**
8927748	*GMC*	**415284**
8927749	*GMC*	327934
8928213	*GMC*	454136N
8928LPD	*JN-MN*	472951
8928LPD	*JN-MN*	**474252**
8928LUP	*JN-MN*	472951
8928LUP	*JN-MN*	**474252**
8929134	*DETRO*	**472324**
8929134	*GMC*	**472324**
8929154	*GMC*	484156V
8929213	*GMC*	454136N
8929503	*GMC*	4494V
893	*ITM*	224040
893	*ITM*	40X60X10!
89307	*HYST*	**417262**!
8931A	*C-R*	**415088**
8931A	*C-R*	**415088**!
8932	*FULLE*	240735
893220	*WHITE*	6597S
893220K1	*DIA*	6597S
893230	*WHITE*	6597S
8932A	*C-R*	415832
8933002971	*AMC*	424
893300414	*AMC*	716445
8933004143	*AMC*	716445
8933004143	*NOK*	716445
893747	*WHITE*	100495
893747	*WHITE*	**417349**
893747T2	*DIA*	**417349**!
893788C91	*IH*	**471571**
8941LUP	*JN-MN*	457299
894225C91	*IH*	**412119**
8943LPD	*JN-MN*	455129*
8943LUP	*JN-MN*	455129
8945LUP	*JN-MN*	**415023**
8945R	*JN-MN*	**415023**
894631	*SPICE*	**415995**!
8946315	*SPICE*	**415072**
8946316	*SPICE*	**415035**!
8946316	*SPICE*	**415035**
894632	*SPICE*	**415449**!
894633	*H-S*	**415351**!
894633	*SPICE*	**415351**!
894637	*SPICE*	**415991**
894637	*SPICE*	455146!
894638	*SPICE*	**470712**!
8946LPD	*JN-MN*	**416891**!
8946LUP	*JN-MN*	**416891**!
894763M1	*MASSE*	**416921**!
8947LPD	*JN-MN*	**415072**
8947LUP	*JN-MN*	**415072**
8948LPD	*JN-MN*	**415090**
8948LUP	*JN-MN*	**415090**
8949LPD	*JN-MN*	**417562**
8949LUP	*JN-MN*	**417562**
894A786	*GE*	450457
8950LPD	*JN-MN*	**416229**
8950LUP	*JN-MN*	**416229**
895121C1	*IH*	**417316**
8951LPD	*JN-MN*	**415116**
8951LUP	*JN-MN*	**415116**
8952LPD	*JN-MN*	**455406**!
8952LUP	*JN-MN*	**455406**!
8953000237	*AMC*	4019N
8953000239	*AMC*	470547
8953000476	*AMC*	**473212**
8953002642	*AMC*	**473452**
8953LPD	*JN-MN*	**417602**!
8953LUP	*JN-MN*	**417602**!
895486	*WHITE*	415983N!
895486T2	*DIA*	415983N!
895486TZ	*WHITE*	415983N!
8954LPD	*JN-MN*	**417604**
8954LUP	*JN-MN*	**417604**
8955LPD	*JN-MN*	**416364**!
8955LUP	*JN-MN*	**416364**!
89569	*US-EL*	**471821**!
8956A	*C-R*	**417621**!
8956LPD	*JN-MN*	**417542**
8956LUP	*JN-MN*	**417542**
895781	*WHITE*	**410496**!
8960B	*HYST*	**416921**!
8961248	*GMC*	2361
896473	*ROCKW*	**415995**!
896473	*ROCKW*	**415995**!
896473	*WHITE*	**415995**!
896473T2	*DIA*	**415995**!
89660	*BR-ST*	7014S
89692	*BR-ST*	**471267**!
896941R91	*IH*	370048A
896K1	*WHITE*	**474276**
89724	*CHRYS*	**471827**
8972LPD	*JN-MN*	**472185**!
8972LUP	*JN-MN*	**472185**!
897348R91	*IH*	**412119**
89735R1	*IH*	240735
8973R	*JN-MN*	**472572**!
8973S	*SPG*	9015S
897436R91	*IH*	416426H=
897599R91	*IH*	**455005**
8975LPD	*JN-MN*	**471619**!
8975LUP	*JN-MN*	**471619**!
898235-R93	*IH*	370019A
8983501389	*AMC*	4370N
8983501872	*AMC*	**474278**
8983503010	*AMC*	**473214**!
8983503063	*AMC*	9912
8983503504	*AMC*	710202
8983503752	*AMC*	223831
8983504434	*AMC*	**472572**
8985R	*JN-MN*	455328
89878	*HYST*	485725N
8989LPD	*JN-MN*	**450084**!
8989LUP	*JN-MN*	**450084**!
898F8	*C-R*	415656
8991LPD	*JN-MN*	**411376**!
8991LUP	*JN-MN*	**411376**!
899246	*WHITE*	**415995**!
8993LPD	*JN-MN*	55539=
8993LUP	*JN-MN*	55539=
899448	*CLARK*	100495
899448	*CLARK*	**417349**
8998	*DICO*	441319
89986R91	*IH*	**450143**

! Industrial Size/Type * Minor Width Difference

= The U.S. customer service number is 877-4-TIMKEN. The Canadian customer service numbers are 800-565-4927 (English) and 800-565-0438 (French-Canadian).

Mfr. No.	Name	Zero Duplication or Recommended Industrial
8999LPD	*JN-MN*	**417496***
8999LUP	*JN-MN*	**417496**
899A4	*WHITE*	408
8A0-501-641A	*AUDI*	1962
8A1096	*FED*	**410308!**
8A1126	*FED*	**473463**
8A1177A	*FORD*	**471835!**
8A1177A1	*FORD*	**471835!**
8A1177A2	*FORD*	**471835!**
8A1177A3	*FORD*	**471835!**
8A1190A	*FORD*	**473235**
8A3591A1	*FORD*	240151
8A3591A2	*FORD*	240151
8A56277S	*TROS*	**55301S**
8A6000	*FED*	**471570!**
8A63	*PUL*	HU013A
8A64	*PUL*	HU009A
8A7261	*FED*	**473215!**
8A7262	*FED*	**471570!**
8A7976	*FED*	**450307**
8A8203	*FED*	**470898!**
8A8579	*FED*	**415449!**
8AX1177	*FORD*	**471835!**
8B136	*CATER*	**472705!**
8B2240	*FED*	**410708**
8B2702	*CATER*	**473367!**
8B2702	*CATER*	**473367**
8B6341	*CATER*	417513
8B7180	*CATER*	**473228**
8B7618	*CATER*	**410987!**
8B7989	*CATER*	**415437**
8B8252	*CATER*	**473215!**
8B8255	*CATER*	**472409!**
8B8294	*CATER*	**416654!**
8B8359	*CATER*	**471766!**
8B8616	*CATER*	**476470**
8B8925	*CATER*	**473229**
8B9631	*CATER*	**470334!**
8C3100	*CATER*	**471192**
8C5167	*CATER*	**417484!**
8C5210	*CATER*	**471267**
8C5236	*CATER*	73478=
8C815248	*FUNK*	**472164!**
8C87638	*FUNK*	**411253!**
8D1175	*FORD*	**410987!**
8D2311	*CATER*	**416167!**
8D3902	*CATER*	**416332!**
8EB1190	*FORD*	6638S
8EB3591A	*FORD*	**480630!**
8EB3591A1	*FORD*	**480630!**
8EB3591A2	*FORD*	**480630!**
8EQH2965	*FORD*	**471689!**
8F0019	*CATER*	100641
8F1596	*CATER*	**415327**
8F2079	*CATER*	**471705!**
8F3522	*CATER*	**472179**
8F3528	*CATER*	**471763**
8F3600	*CATER*	**415035**
8F4331	*CATER*	413479
8F450	*CATER*	470328
8F450	*CATER*	**481213!**
8F5179	*CATER*	**471442**
8F530	*CATER*	**415023**
8F5340	*CATER*	240731
8F5583	*CATER*	**417562**
8F7702	*CATER*	727410
8F9770	*CATER*	**417316!**
8G1002	*HU-WR*	**415027**
8G1002	*HU-WR*	**415027!**
8G1085	*HU-WR*	**412473!**
8G1176	*HU-WR*	**471649!**
8G1178	*HU-WR*	**473205**
8H7319	*CATER*	**417621**
8H9155	*CATER*	456946N=
8H9180	*CATER*	7188S
8H9220	*CATER*	**471267!**
8H9519	*CATER*	**474274**
8H9520	*CATER*	**471267!**
8H9826	*CATER*	**470605!**
8H9836	*CATER*	**473232**
8J1190	*FORD*	6547
8J4869	*CATER*	**416364!**
8J7893	*JNSON*	J1119
8L2594	*CATER*	**471570!**
8L2595	*CATER*	**417350!**
8L2891	*CATER*	**481443!**
8L3024	*CATER*	**481443!**
8L6547	*CATER*	**472475**
8L7657	*FORD*	**473235!**
8L7657A	*FORD*	**473235!**
8L7657B	*FORD*	7300S
8L7657C	*FORD*	7300S
8M1177	*FORD*	40067S=
8M1177A	*FORD*	**473228**
8M1177B	*FORD*	**473228**
8M3524	*CATER*	**470334!**
8M3591	*FORD*	240356
8M4104	*CATER*	**473459**
8M4676	*FORD*	5778
8M4676A	*FORD*	5778
8M7657	*FORD*	**473228!**
8M8110	*CATER*	456837V
8M8761	*CATER*	**472018**
8M8955	*CATER*	**415035**
8M9299	*CATER*	**471570!**
8N-4233A	*FORD*	**472492**
8N4233	*FORD*	**472492!**
8N4233A1	*FORD*	**472492!**
8N4233A2	*FORD*	**472492!**
8N4248	*FORD*	6643S
8N4248A	*TRU-P*	6643S
8N4248B	*FORD*	6643S
8N4251	*FORD*	**417316!**
8N4251B	*FORD*	**417316!**
8N7052	*FORD*	**472258**
8N7052A	*FORD*	**472258**
8N7052A1	*FORD*	**472258**
8N7052A2	*FORD*	**472258**
8N7052A3	*FORD*	**472258**
8N7052H	*FORD*	**471141!**
8QH1174	*FORD*	6532S=
8QH1181	*FORD*	6532S=
8S2225	*CATER*	**254287***
8S4862	*B-L-H*	**472164!**
8S5575	*CATER*	**471442!**
8S5575	*CATER*	482971
8T0085	*CATER*	417940!
8T0322	*CATER*	416865N
8T1009	*HU-WR*	**473313**
8T1020	*HU-WR*	**473245!**
8T1051	*HU-WR*	**415938**
8T1284	*HU-WR*	**417563**
8T1402	*HU-WR*	**472016**
8T2230	*CATER*	4419!
8T2604	*CATER*	351487
8T2604	*CATER*	7188S
8T3007	*CATER*	77980=
8T3413	*CATER*	**473232**
8T4676A	*FORD*	**410737!**
8T4676B	*FORD*	**410737!**
8T6917	*CATER*	**416921!**
8T7021	*CATER*	417939
8T7274	*FORD*	**472705!**
8X16X7	*FORSH*	8X16X7
8X16X7	*SIMRT*	8X16X7
8X16X7SC	*TRSCM*	8X16X7
8X18X5AN(35)	*ISP*	8X18X5
8X18X7SC	*TRSCM*	8X18X7
8X18X7TC	*TRSCM*	8X18X7
8X22X7	*FORSH*	8X22X7!
8X22X7	*SIMRT*	8X22X7!
8X22X7SC	*TRSCM*	8X22X7!
8X22X7TC	*TRSCM*	8X22X7!
8X24X7	*FORSH*	8X24X7
8X24X7	*SIMRT*	8X24X7
8X24X7SC	*TRSCM*	8X24X7
8X24X7TC	*TRSCM*	8X24X7
9-09924-449-0	*VILA*	228480
900	*C-R*	415983N+99372
900	*UNIVE*	**415090***
900016	*EL-MO*	**471424!**
90003	*C-R*	**55301S**
90005	*C-R*	**55301S**
90006	*C-R*	417940!
90006	*C-R*	**55301S***
900108	*EL-MO*	**416664!**
900110	*MICH*	**415090***
9001100	*UNIVE*	**415090***
9001223	*GMC*	**471466!**
90015	*C-R*	455476
900154C	*SPG*	712140
900156	*EL-MO*	**415867**
90016	*C-R*	455476
900160	*C-R*	**456462**
90017	*C-R*	455476
90019	*C-R*	455476
9001R	*JN-MN*	417498
9002	*JN-MN*	**416892**
900202	*EL-MO*	**455079!**
900218	*EL-MO*	**471567!**
900229	*EL-MO*	**415088**
900229	*EL-MO*	**415088!**
90023	*C-R*	**455462***
90024	*C-R*	**455462**
90025	*C-R*	**455462**
900250	*C-R*	**455462**
900253C	*SPG*	712139
90026	*C-R*	**455462**
900276	*EL-MO*	**471570!**
900279	*EL-MO*	**417556**
90030	*C-R*	**415090**
900301	*EL-MO*	**412920!**
900302	*EL-MO*	**471763**
900313	*EL-MO*	**473214!**
90035	*C-R*	**415090**
90036	*C-R*	**415090***
900366	*EL-MO*	**416154!**
900384	*EL-MO*	**415437**
900392	*EL-MO*	**471224!**
900402C	*SPG*	**472150**
9004LPD	*JN-MN*	**455019!***
9004LUP	*JN-MN*	**455019!**
9005	*C-R*	710254
9005	*JN-MN*	370021A
900509	*EL-MO*	**416666**
90052	*DENCO*	**410102**
900520	*EL-MO*	**416239!**
9005354	*GMC*	**415938**
9005357	*GMC*	**417602!**
9005359	*GMC*	**415938**
9005360	*GMC*	**416381**
900553	*EL-MO*	**415995!**
900556	*EL-MO*	**472397!**
90060	*C-R*	**415090**
90061	*C-R*	**415090**
900621	*EL-MO*	**415725!**
90063	*C-R*	**415090**
90066	*SPG*	**473367**
900665	*EL-MO*	**473241**
900666	*EL-MO*	**471192**
90067	*SPG*	**473228!**
900695	*EL-MO*	**471316**
900734	*EL-MO*	**473227!**
900757	*EL-MO*	**415449!**
900831	*EL-MO*	**417079**
90091926	*GMC*	228008
900920	*EL-MO*	**416130!**
900927	*EL-MO*	416556!
900927	*EL-MO*	**472157**
900939	*EL-MO*	**417474**
900959	*EL-MO*	**471316**
90096	*ADAMS*	**471413**
900974	*EL-MO*	**472015!**
900991	*EL-MO*	**415302**
901	*C-R*	712270+99086
901	*C-R*	712270+99087
901017	*WAYNE*	240733
901018	*WAYNE*	**450039**
90102037	*DEMPC*	**471760**
901027	*WAYNE*	450908=
9010625	*GMC*	J1117
9010630	*GMC*	**415483**
9010A	*C-R*	**471763***
9012	*JN-MN*	370023A
90122607	*GMC*	710232
90122609	*GMC*	1108
90123632	*JOY*	**471413!**
90124110	*JOY*	**415058**
901241100	*JOY*	**417344!**
901241101	*JOY*	**416654!**
901241104	*JOY*	**415995!**
901241105	*JOY*	**473245!**
901241106	*JOY*	470059
901241106	*JOY*	**470380!**
901241108	*JOY*	**480210!**
901241111	*JOY*	**417487**
901241115	*JOY*	**416865!**
90124112	*JOY*	**456105**
901241120	*JOY*	**481073**
901241121	*JOY*	**471553!**
901241123	*JOY*	**471689!**
901241124	*JOY*	**471649!**
901241125	*JOY*	**471224!**
901241127	*JOY*	**471763**
901241128	*JOY*	**476838!**
901241129	*JOY*	**470712!**
90124113	*JOY*	**415035**
901241113	*JOY*	**415035!**
901241131	*JOY*	**471750!**
901241132	*JOY*	**470625!**
901241133	*JOY*	**473229**
901241135	*JOY*	**470712!**
901241137	*JOY*	**473010**
901241138	*JOY*	**473446**
901241139	*JOY*	**473236!**
901241142	*JOY*	**470334!**
901241144	*JOY*	**473450**
901241145	*JOY*	**471866!**
901241146	*JOY*	**473458!**
901241147	*JOY*	**471868**
901241148	*JOY*	**472439**
90124115	*JOY*	**455008**
901241151	*JOY*	**472397!**
901241152	*JOY*	**473242**
901241153	*JOY*	**416738!**
901241153	*JOY*	450096
901241154	*JOY*	**450307**
901241155	*JOY*	**472016**

! Industrial Size/Type * Minor Width Difference

= The U.S. customer service number is 877-4-TIMKEN. The Canadian customer service numbers are 800-565-4927 (English) and 800-565-0438 (French-Canadian).

Mfr. No.	Name	Zero Duplication or Recommended Industrial
901241158	JOY	411253!
90124116	JOY	471766!
901241160	JOY	410694!
901241161	JOY	411394!
901241162	JOY	416271!
901241163	JOY	417073
901241164	JOY	410496!
901241165	JOY	415302
901241166	JOY	415458!
901241167	JOY	417485
901241168	JOY	455005
901241169	JOY	417134
90124117	JOY	457874
901241172	JOY	417488!
901241173	JOY	55155=
901241174	JOY	417621!
901241175	JOY	416288!
901241178	JOY	412473!
901241179	JOY	417191
901241179	JOY	456585
90124118	JOY	416339
90124118	JOY	455031!
901241180	JOY	415025
901241181	JOY	455249!
901241182	JOY	415711
901241183	JOY	415937!
901241184	JOY	415379!
901241184	JOY	415379
901241187	JOY	417211!
901241189	JOY	415138!
901241190	JOY	415034!
901241192	JOY	417513
901241193	JOY	416891!
901241194	JOY	472157!
901241194	JOY	472157
901241195	JOY	416888!
9012412	JOY	417546!
90124120	JOY	415045!
901241200	JOY	416167!
901241201	JOY	416865!
901241202	JOY	416865!
901241206	JOY	457874
901241208	JOY	416229
901241209	JOY	411376!
90124121	JOY	416892!
901241211	JOY	415551
901241213	JOY	417606
901241214	JOY	417020
901241216	JOY	471648
90124122	JOY	455024
90124123	JOY	412119!
90124124	JOY	471765!
901241241	JOY	470712!
90124125	JOY	417316!
901241251	JOY	471272!
901241254	JOY	415995!
901241259	JOY	471570!
90124126	JOY	476470
901241263	JOY	415991
901241263	JOY	455146!
901241268	JOY	471567!
901241269	JOY	473213!
901241270	JOY	417492
901241271	JOY	416892!
901241272	JOY	415938
901241273	JOY	418028
901241273	JOY	455137!
901241274	JOY	415437
901241275	JOY	471554!
901241279	JOY	416664!
90124128	JOY	415036
901241282	JOY	473228

Mfr. No.	Name	Zero Duplication or Recommended Industrial
90124129	JOY	415645!
90124129	JOY	455104
901241290	JOY	415938
901241293	JOY	473474
901241294	JOY	471466!
901241296	JOY	450177
9012413	JOY	416107!
9012413	JOY	455073
901241301	JOY	416125!
901241302	JOY	417262!
901241303	JOY	472311!
901241307	JOY	415995!
901241308	JOY	471424!
901241315	JOY	471391!
901241323	JOY	471692!
901241328	JOY	472560N!
901241329	JOY	473237!
90124133	JOY	415007
90124135	JOY	473214
901241354	JOY	417602!
90124136	JOY	415988
90124137	JOY	471138!
901241370	JOY	470605!
901241376	JOY	472492!
901241391	JOY	473197
9012414	JOY	416666
90124142	JOY	415379!
90124142	JOY	415379
901241427	JOY	417316!
90124143	JOY	418028
90124143	JOY	455137!
90124145	JOY	415960
901241452	JOY	417316!
901241457	JOY	473367
90124146	JOY	473238
90124147	JOY	415960
90124148	JOY	472924!
90124149	JOY	417356!
90124149	JOY	455188
9012415	JOY	472185!
90124151	JOY	472636!
90124152	JOY	415995!
90124154	JOY	473232
90124157	JOY	416153!
90124158	JOY	470530!
9012416	JOY	450084!
90124160	JOY	410737!
90124161	JOY	473214
90124164	JOY	415379
90124164	JOY	415379!
90124165	JOY	416239!
90124166	JOY	417247!
9012417	JOY	415001!
90124171	JOY	415991
90124171	JOY	455146!
90124172	JOY	410102
90124173	JOY	471571
90124176	JOY	473467
90124177	JOY	413469!
90124178	JOY	417171!
90124179	JOY	415021
9012418	JOY	413469!
90124180	JOY	415988
90124181	JOY	415023
90124182	JOY	473215!
90124184	JOY	471821!
90124187	JOY	474265
90124189	JOY	472144!
9012419	JOY	415027
9012419	JOY	415027!
90124191	JOY	473460
90124194	JOY	472394

Mfr. No.	Name	Zero Duplication or Recommended Industrial
90124196	JOY	416444
90124197	JOY	411245!
90124198	JOY	415449!
90124199	JOY	455151
901244100	JOY	471736
901244107	JOY	470625!
901244108	JOY	470625!
901244109	JOY	470059
901244109	JOY	470380!
90124411	JOY	417487
901244110	JOY	470059
901244110	JOY	470380!
901244112	JOY	473229
901244113	JOY	473229
90124412	JOY	456105
901244120	JOY	472179
901244121	JOY	472179
901244127	JOY	472572!
901244132	JOY	472492!
901244134	JOY	472397!
901244136	JOY	473463
901244137	JOY	416738!
901244137	JOY	450096
901244139	JOY	450532
901244140	JOY	473467
901244145	JOY	473243
901244149	JOY	471272!
901244153	JOY	411253!
901244154	JOY	412920!
901244155	JOY	455136
90124416	JOY	471766!
901244173	JOY	415449!
901244181	JOY	417344!
901244182	JOY	417158!
901244189	JOY	417351!
901244191	JOY	417488!
901244197	JOY	417490
901244200	JOY	455336
901244202	JOY	418028
901244202	JOY	455137!
901244203	JOY	476470
901244213	JOY	417356!
901244213	JOY	455188
901244222	JOY	416137
901244236	JOY	417278
901244246	JOY	415072
90124425	JOY	417316!
90124426	JOY	476470
901244260	JOY	411394!
901244278	JOY	471870!
9012443	JOY	416107!
9012443	JOY	455073
90124430	JOY	416921!
90124433	JOY	415007
90124437	JOY	471138!
90124441	JOY	417507
90124441	JOY	417507!
90124443	JOY	418028
90124443	JOY	455137!
901244461	JOY	472164!
9012447	JOY	415449!
90124476	JOY	473236!
90124485	JOY	50266
90124489	JOY	471224!
90124491	JOY	471224!
90124493	JOY	471835!
90124497	JOY	471692!
90124499	JOY	471785!
901245121	JOY	472179
901245208	JOY	415437
901246127	JOY	416891!
901246133	JOY	415138!

Mfr. No.	Name	Zero Duplication or Recommended Industrial
901246236	JOY	472016
901246253	JOY	471570!
901246276	JOY	476470
90124629	JOY	417344!
901246294	JOY	417596
90124630	JOY	416921!
90124631	JOY	471750!
901246314	JOY	416154!
90124632	JOY	471413
901246323	JOY	456105
90124638	JOY	481163!
90124640	JOY	472029
90124641	JOY	417507
90124641	JOY	417507!
90124652	JOY	415995!
90124653	JOY	415991
90124653	JOY	455146!
90124664	JOY	472179
90124666	JOY	472492!
90124668	JOY	471271!
90124681	JOY	472924!
90124682	JOY	472397!
9012469	JOY	417344!
901247106	JOY	415995!
901247107	JOY	55155=
901247109	JOY	417621!
901247121	JOY	415034!
901247162	JOY	55301S
901247165	JOY	415645!
901247165	JOY	455104
901247177	JOY	416891!
901247179	JOY	472636!
901247187	JOY	416364!
901247193	JOY	471567!
901247197	JOY	415138!
90124731	JOY	471750!
901247413	JOY	470605!
90124751	JOY	472636!
901248103	JOY	473450
901248150	JOY	415138!
901248156	JOY	472560N!
901248161	JOY	411394!
90124823	JOY	412119!
9012483	JOY	412119!
90124860	JOY	410190
90124861	JOY	471571
90124862	JOY	470712!
90124869	JOY	50075=
90124871	JOY	473462
90124873	JOY	471224!
90124876	JOY	417171!
90124880	JOY	481568!
90124899	JOY	450068
901259D	SPG	413246
901288	O-M	203025
90129860	GMC	3543
90129860	GMC	35X55X11!
901354A	SPG	712137
90136	WHITE	473367
90136	WHITE	473367!
90136849	GMC	710399
9013LPD	JN-MN	450188
9013LUP	JN-MN	450188
9014	JN-MN	370030A
90140	WHITE	470059
90140	WHITE	470380!
9014004	ESSIC	40169S
9014005	ESSIC	471529
9014007	ESSIC	471567!
9014015	ESSIC	450593!
9014016	ESSIC	470328
9014016	ESSIC	481213!

! Industrial Size/Type
= The U.S. customer service number is 877-4-TIMKEN. The Canadian customer service numbers are 800-565-4927 (English) and 800-565-0438 (French-Canadian).

Mfr. No.	Name	Zero Duplication or Recommended Industrial
9014017	ESSIC	471692!
9014023	ESSIC	471787
9014042	ESSIC	473231!
9014043	ESSIC	471504!
9014049	ESSIC	472572!
9014051	ESSIC	473426
9014053	ESSIC	470059
9014053	ESSIC	470380!
9014055	ESSIC	471224!
9014060	ESSIC	471341!
9014062	ESSIC	450143
9014063	ESSIC	473460
9014065	ESSIC	472179
9014072	ESSIC	471689!
9014073	ESSIC	470712!
9014077	ESSIC	50345=
9014079	ESSIC	474278!
9014082	ESSIC	473227
9014085	ESSIC	470625!
9014091	ESSIC	417316!
9014095	ESSIC	417350!
9014098	ESSIC	343185
9014099	ESSIC	240816
90141	WHITE	470059
90141	WHITE	470380!
9014102	ESSIC	473239
9014107	ESSIC	6283S
9014109	ESSIC	5924
9014117	ESSIC	470954!
9014119	ESSIC	417350!
9014120	ESSIC	471192
9014123	ESSIC	473215!
9014128	ESSIC	473229
9014131	ESSIC	473215!
9014141	ESSIC	471692!
9014143	ESSIC	413247!
9014144	ESSIC	472157!
9014144	ESSIC	472157
9014149	ESSIC	415498
9014154	ESSIC	473460
9014170	ESSIC	40494S
9014172	ESSIC	470954!
9014173	ESSIC	365008
9014179	ESSIC	473415
9014194	ESSIC	416297
9014201	ESSIC	473234
9014211	ESSIC	415379!
9014211	ESSIC	415379
9014234	ESSIC	473215!
9014235	ESSIC	472299
9015	JN-MN	370023A
90153	SPG	472287!
901532C	SPG	472397!
901556C	SPG	710180
90156855	GMC	710164
901577C	SPG	472354
901605C	SPG	471854!
9016973	GMC	417603!
9016987	GMC	415327
901712	C-R	415317
901716	C-R	415551
901716	MINMA	415551
901716M1	C-R	415551
901728	C-R	455397
90178	C-R	415116
90180515	GMC	228008
90180529	GMC	714436
90182165	GMC	710331
90182166	GMC	3543
9018594	GMC	417020
9019LUP	JN-MN	415077*
901T2	WHITE	473215!
901VB7	MARI	415090
902	UNIVE	55218=
9020LPD	JN-MN	473242*
9020LUP	JN-MN	473242
902146	EL-MO	471567!
9021835	GMC	412473!
9022031	ESSIC	471224
902231	EL-MO	417262!
9022496	GMC	474276!
9022745	EUCLD	470712!
9022745	GMC	470712!
9022945	GMC	476470
9023693	GMC	340787
9024	JN-MN	370006A
9024837	GMC	295113=
9025	JN-MN	370019A
902618	EL-MO	416404!
9026194	GMC	240414
902700	CLAYE	471818
902701	CLAYE	471763
902704	CLAYE	471413!
902736	EL-PA	411376!
902752	CLAYE	210914
9028	JN-MN	415058
90280462	GMC	710237
9028LPD	JN-MN	471750!
9028LUP	JN-MN	471750!
9029	JN-MN	370003A
90292186	BUC-E	471570!
902T2	DIA	471570!
902T2	WHITE	471570!
903	CALI	415991
903	CALI	455146!
90304R91	IH	450143
9030LUP	JN-MN	417608
90311-45006	VILA	710345
90311-92003	VILA	229210
903125	BADGE	470380!
9032	JN-MN	370036A
903220	EL-PA	470530!
9032982	GMC	472439
903341	EL-MO	416556!
903341	EL-MO	472157
903342	EL-MO	417262!
903379C1	SOLAR	471571
90342143	GMC	3543
903457	EL-PA	416271!
90354378	GMC	710237
9035878	EUCLD	412473
9035878	GMC	412473
9036762	GMC	473215!
9036763	GMC	413247!
9036866	GMC	9773
9037454	GMC	470898
9037547	GMC	417040
9037591	GMC	471344
90386	CHRYS	410308!
904	UNIVE	415219
9040164	GMC	416654!
904021	LETN	415483!
904097	BADGE	473228!
904111	MICH	55218=
9041112	UNIVE	55218*=
9041LPD	JN-MN	473228
9041LUP	JN-MN	473228
9042321	GMC	475384
9042LPD	JN-MN	417191
9042LPD	JN-MN	455165!
9042LUP	JN-MN	417191
9042LUP	JN-MN	455165!
9043356	GMC	6703S
9043381	GMC	472179
9043451	EUCLD	352541
9043451	GMC	352541
9043LPD	JN-MN	472397!
9043LUP	JN-MN	472397!
9044336	GMC	480210!
9044396	GMC	471442!
904483	BADGE	471795
904485	BADGE	471831!
9044LUP	JN-MN	417541
9045LPD	JN-MN	415995!
9045LUP	JN-MN	415995!
9046018	GMC	415234!
9046020	GMC	472636!
9046310	SPICE	418028
9046310	SPICE	455137!
9046315	SPICE	415991
9046315	SPICE	455146!
9046316	SPICE	415035
9046316	SPICE	415035!
904633	SPICE	417344!
904634	SPICE	412473!
904635	SPICE	415449!
904636	SPICE	418028
904636	SPICE	455137!
904637	SPICE	412473!
904638	SPICE	471267!
904639	SPICE	472193!
9046A	C-R	455144
9048LPD	JN-MN	415327*
9048LUP	JN-MN	415327
9049000	GMC	471466!
904921C1	SOLAR	471407
904922C1	SOLAR	471413!
904G	OSHKO	416476!
9050644	GMC	416273!
9050712	GMC	470530!
9050715	GMC	470530!
90516AB	CASE	473475
9051749	EUCLD	410102
9051749	GMC	410102
9051869	GMC	473458!
9051994	GMC	415021
9052155	WHITE	370001A
905215S	WHITE	370001A
9052358	GMC	415379
9052413	GMC	455556
9052824	GMC	712937
905301	AVCO	472164!
9053715	GMC	416282
9053962	GMC	370043A
905476C1	SOLAR	472179
9054800	GMC	412871!
905530C1	IH	471267!
905531C1	IH	480210=
90555	C-R	230X260X15
90562	WHITE	473367!
90562	WHITE	473367
90563	WHITE	473449
9056LPD	JN-MN	451857
9056LUP	JN-MN	451857
90574	WHITE	473228
905931	BADGE	472185!
906006	LETN	415458!
90600R1	NAVST	12473
90601H	IH	340413
906026	LETN	472164!
906027	LETN	472164!
906034C1	SOLAR	470380!
906035	LETN	417171!
90623	EATON	712937
90626	FI-CO	473228!
9062821	GMC	471504
9063043	GMC	418028
9063044	GMC	415991
9063044	GMC	455146!
9064421	GMC	710041
90648	DIVCO	474265
906486	EL-MO	415389
906489	EL-MO	417171!
90649	DIVCO	473462
9065	C-R	222330
906501	GWI	471231!
90655	DIVCO	412119!
90656	DIVCO	473245!
9065LUP	JN-MN	472954
9068	C-R	222340
907017C1	IH	471647
907159TDR	SPG	471267
907273	WILYS	471341!
90730	CROWN	416271!
907390	WILYS	450588!
9074R	JN-MN	415449!
9076436	GMC	474278!
907653	WILYS	472311!
9076LPD	JN-MN	471984
9076LUP	JN-MN	471984
9077LPD	JN-MN	472185!
9077LUP	JN-MN	472185!
9078	EATON	471820
9078	TRUK	471820
90788	WHITE	416294!
9078B	EATON	412871!
9078B	TRUK	412871!
9078C	TRUK	412871!
9079A	EATON	471272!
9079A	TRUK	471272!
908	UNIVE	417606
9080	C-R	450038
9080	DICO	204027
908000002478	ROCKW	471466!
9080LPD	JN-MN	472354!
9080LUP	JN-MN	472354!
908112	MICH	415219*
9081125	UNIVE	415219*
90842	WHITE	415001!
908601	EL-MO	417603!
90870	CROWN	6668S
9089	OLIVE	470334!
909030	OMC	17760
90913	SPG	415449!
9092LPD	JN-MN	416288!
9092LUP	JN-MN	416288!
90935	CATER	472636
90940	WHITE	5751
90RU-21-P2	MACK	AR10+370020A
90X110X12SC	TRSCM	90X110X12
90X110X12TC	TRSCM	90X110X12
90X120X12SC	TRSCM	90X120X12
90X120X12TC	TRSCM	90X120X12
90X125X13ASN	ISP	90X125X13
90X125X13ASN	ISP	90X125X7*
90X125X13ASN(32)	ISP	90X125X13
910	UNIVE	55222=
91001	KELSE	412920
91001R91	IH	417316!
91002	KELSE	442251
91002R91	IH	417316!
91007	KELSE	417172
9100801	KELSE	418028
9101191	GMC	416239!
91023	FRUEH	417172
9102553	GMC	417298
91036	CATER	254270
91036	TMTR	254270

! Industrial Size/Type * Minor Width Difference

= The U.S. customer service number is 877-4-TIMKEN. The Canadian customer service numbers are 800-565-4927 (English) and 800-565-0438 (French-Canadian).

Mfr. No.	Name	Zero Duplication or Recommended Industrial
9103939	GMC	**417555**!
9105070	GMC	**417602**!
910677	NOK	70X95X10
91080R91	IH	5405
9108767	EUCLD	**473236**!
9108767	GMC	**473236**!
910984C1	SOLAR	**471619**!
9110079	GMC	55692=
911035	C-W	**471141**!
911035	WOOL	**471141**!
911045	LETN	**472164**!
911046	LETN	**472018**
911047	LETN	**417349**
9110516	GMC	**415379**
9110516	GMC	**415379**!
9110569	GMC	**415995**!
9110569	GMC	**415995**!
9110978	GMC	415137!
9110978	GMC	**418028**
9110998	GMC	**455584**
911105	LETN	**417349**
9111307	GMC	**410496**!
911157	OMC	17760
9111838	GMC	**415938**
9111933	GMC	8996S=
9111936	GMC	**415551**
9111993	GMC	8996S=
911216	AMC	**410308**!
911216	WILYS	**410308**!
9112463	GMC	**471750**!
9113	ALLCH	**472560N**!
9113	TRAC	**472560N**!
9113848	GMC	**416394**
9113LPD	JN-MN	**471529**
9113LUP	JN-MN	**471529**
9113N	NATL	**417349**
911447R91	IH	**473463**
911448R91	IH	**470954**!
91170	WHITE	50560
9117078	GMC	**415449**!
91172349	GMC	710505
91172554	GMC	710343
91172558	GMC	221122
91172563	GMC	223830
91173283	GMC	710523
91173294	GMC	710310
91173941	GMC	223605
91175484	GMC	710310
91175954	GMC	223830
91176031	GMC	223540
9118259	GMC	**471763**
9119951	GMC	**417562**
9119952	GMC	**415645**!
9119952	GMC	455104
912	UNIVE	55223=
91201-PC1-003	ACURA	221620
91201-PC1-004	ACURA	221620
91201-PW5-015	ACURA	710173
91201-PY5-003	ACURA	225545
91201-PY5-005	ACURA	225545
91202-PY5-003	ACURA	223805
91202-PY5-005	ACURA	223805
91203-PG6-003	ACURA	222743
91203-PR4-004	ACURA	1990
91205-PG1-003	ACURA	224045
91205-PL3-801	ACURA	224026
91205-PL3-B02	ACURA	224026
91205-PW5-005	ACURA	710147
91206-611-005	VILA	710336
91206-PG2-005	ACURA	224026
91206-PW5-015	ACURA	224025
91206-PY4-003	ACURA	710298
91206-PY4-004	ACURA	710298
91207-P56-003	ACURA	350609
91207-PR8-005	ACURA	710291
91208-PG1-003	ACURA	710297
91208-PG1-005	ACURA	710297
91208-PW5-005	ACURA	710249
9120LUP	JN-MN	**472492**!
912113	MICH	415871
9121137	UNIVE	415871
91212-PA5-004	ACURA	710329
91212-PR3-003	ACURA	223802
91212-PR4-A01	ACURA	223802
91212-PT0-003	ACURA	224052
91213-PH7-003	ACURA	713771
91213-PH7-013	ACURA	713771
91213-PL2-003	ACURA	713771
91213-PR3-004	ACURA	1989
91213-PR7-A01	ACURA	1989
91213-PY3-003	ACURA	3771
91213-PY3004	ACURA	3771
91214-PB2-003	ACURA	227610
91214-PH1-013	ACURA	228015
91214-PH1-661	ACURA	228015
91214-PR4-A01	ACURA	228015
91214-PY3-003	ACURA	228008
9121414	GMC	**476470**
91215-PG2-005	ACURA	221607
91215-PR8-005	ACURA	710299
91216-PG1-003	ACURA	710157
91216-PG1-005	ACURA	710157
91216-PH8-003	ACURA	222830
91216-PH8-003	VILA	222830
91216-PH8-005	ACURA	222830
91216-PH8-005	VILA	222830
91216-PR8-005	ACURA	223235
912399	WILYS	340797
91240	C-R	55532=
91249-PY3-003	ACURA	221820
912540	FALKC	**471821**!
912540	MIX	**471821**!
912541	FALKC	50266
912541	MIX	50266
912542	MIX	**413247**!
912543	FALKC	**417159**
912543	MIX	**417159**
912544	FALKC	**415498**
912544	MIX	**415498**
912545	FALKC	455037
912545	MIX	455037
912546	FALKC	**415138**!
912546	MIX	**415138**!
912547	FALKC	**416107**!
912547	FALKC	455073
912547	MIX	**416107**!
912547	MIX	455073
912548	FALKC	**417210**!
912549	FALKC	**417606**
91255-273-000	ACURA	1172
91255-SL0-000	ACURA	710293
912550	FALKC	**415077**
912551	FALKC	**416229**
912553	FALKC	**415219**
912554	FALKC	**417604**
912557	FALKC	**471138**!
912558	FALKC	**417350**!
912559	FALKC	**415234**!
912560	FALKC	**473238**
912561	FALKC	**455079**!
912562	FALKC	**410102**
912573	FALKC	**416313**
9125880	GMC	**417262**!
912596	FALKC	**417191**
912596	FALKC	455165!
912599	FALKC	470328
912599	FALKC	**481213**!
91260-SK7-013	ACURA	710158
91260-SK7-014	ACURA	710158
91260-SL0-004	ACURA	710160
91260-SL5-003	ACURA	710301
91260-SL5-004	ACURA	710301
91260-SL5-005	ACURA	710301
91260-SR3-003	ACURA	710300
91260-SR3-004	ACURA	710300
912603	FALKC	**471652**
912603	MIX	**471652**
91262-SH3-000	ACURA	710159
91262-SH3-003	ACURA	710159
91262-SL5-003	ACURA	**1213N**
91262-SL5-004	ACURA	**1213N**
91262-SP0-003	ACURA	1180
91262-SP0-004	ACURA	1180
912628	FALKC	**472193**!
912677	FALKC	**416229**
912682	FALKC	450165
912682	FALKC	**471801**!
91270	C-R	55218=
912713R91	IH	6808N
912735	FALKC	**415219**
912741	FALKC	**415991**
912741	FALKC	**415991**!
912748	C-R	**473367**!
912748	FALKC	**473367**!
912749	FALKC	**471504**
912757	FALKC	**417316**!
912758	FALKC	**415995**!
912759	C-R	**476470**
912760	FALKC	**415035**
912760	FALKC	475845!
912761	FALKC	**416888**!
912763	FALKC	**416107**!
912776	FALKC	**412473**!
912782	FALKC	**416666**
912791	FALKC	416556!
912791	FALKC	**472157**
912794	FALKC	**413247**!
912795	FALKC	**415498**
912796	FALKC	**415150**!
912810	FALKC	**411245**!
912811	FALKC	**417967**!
912818	FALKC	**416888**!
912820	FALKC	**476470**
912822	FALKC	**415379**
912822	FALKC	**415379**!
912823	FALKC	**416107**!
912823	FALKC	455073
912824	FALKC	**416865**!
912826	FALKC	**472397**!
912827	FALKC	**417603**!
912828	FALKC	415871
912829	FALKC	**415995**!
912830	FALKC	**415991**
912830	FALKC	**415991**!
912831	FALKC	**417254**
912832	FALKC	**415294**!
912833	FALKC	**416239**!
912834	FALKC	**455121**
912839	FALKC	**417600**
912840	FALKC	**417158**!
9128434	GMC	**471270**!
912846	FALKC	**415001**!
912848	FALKC	**415867**
912849	FALKC	**473230**!
9129717	GMC	**416158**
912978	FALKC	**417357**
9129S	MINNM	**473467**
913	SPICE	**473215**!
913094	IVECO	713094
91331	IH	**473225**!
91352	TMTR	**471267**!
913580	C-R	55218=
913720	C-R	**417598**
913720M1	C-R	**417598**
9137291	GMC	**471689**!
9137381	GMC	**415991**
913763	CHRYS	**455079**!
91377	CHRYS	240009
91378	CHRYS	**471424**!
91384749	GMC	**473179**
914	UNIVE	55224=
9140040	GMC	**473227**
914005	ESSIC	**471529**
9140112	GMC	**455249**!
914023	ESSIC	**471787**
914035	ESSIC	470059
914035	ESSIC	**470380**!
914043	ESSIC	**471504**!
914049	ESSIC	**472572**!
914060	ESSIC	**471341**!
914099	ESSIC	240816
9141	HYST	**450084**!
914154	ESSIC	**473460**
914167	CHRYS	**473457**!
9142002	GMC	**416077**
914201	ESSIC	**473234**
914207	ESSIC	**473454**
914209	ESSIC	**471765**!
914234	ESSIC	**473215**!
914235	ESSIC	**472299**
914281	ESSIC	**417354**!
9142SS	JN-MN	**471224**
9143LUP	JN-MN	457294*
9144LPD	JN-MN	**413247**!
9144LUP	JN-MN	**413247**!
91474	AM WH	**416107**!
91474	AM WH	455073
91474	CHRYS	**471413**!
914802	WILYS	6465
914971	WILYS	340210
914972	WILYS	**471341**!
9149LPD	JN-MN	**411394**!
9149LUP	JN-MN	**411394**!
915005C1	SOLAR	**472179**
9151994	GMC	**415437**!
9151994	GMC	**415437**
9151LPD	JN-MN	**415041**
9151LUP	JN-MN	**415041**
9152466	GMC	**412861**
915263	WILYS	**472164**!
915263X	WILYS	**472164**!
915264	WILYS	**415991**
915264	WILYS	455146!
915264X	WILYS	**415991**
915264X	WILYS	455146!
9152781	GMC	**415991**
9152781	GMC	**415991**!
9152LPD	JN-MN	**471564**
9152LUP	JN-MN	**471564**
9153174	GMC	**455584**
9153476	GMC	343185
9153486	GMC	**473215**!
915496	CHRYS	6077
915497	CHRYS	**416273**!
915499	CHRYS	**417485**
915561	CHRYS	**470954**
9156004	GMC	**416921**!
9156005	GMC	**415284**

! Industrial Size/Type * Minor Width Difference

= The U.S. customer service number is 877-4-TIMKEN. The Canadian customer service numbers are 800-565-4927 (English) and 800-565-0438 (French-Canadian).

Mfr. No.	Name	Zero Duplication or Recommended Industrial
9156020	GMC	473243
915664	WILYS	2064
9158953	GMC	40401
9159LPD	JN-MN	417273
9159LUP	JN-MN	417273
9160997	GMC	417343!
916115	MICH	417606
9161150	UNIVE	417606
9161942	GMC	416921!
9162X	SPG	8594S
916380	WILYS	471766
916401	CABOT	415294!
916402	CABOT	417205!
916463-2	SPICE	415483!
9164631	SPICE	413246
9164S	SPG	473234!
9165LPD	JN-MN	416666
9165LUP	JN-MN	416666
916642	CABOT	417344!
916649	CABOT	476470
916650	CABOT	472179
916651	CABOT	415995!
916654	CABOT	415991
916654	CABOT	415991!
916655	CABOT	472439
916656	CABOT	415034!
916657	CABOT	415725!
916658	CABOT	472636!
916662	CABOT	415683
916720	GWI	415234!
9168004	GMC	417273
9168LPD	JN-MN	472070
9168LUP	JN-MN	472070
9169	FULLE	240731
916968	WILYS	473459
917015001	CLARK	471344
917032	WILYS	240816
9170LPD	JN-MN	416888!
9170LUP	JN-MN	416888!
9171LPD	JN-MN	471887
9171LUP	JN-MN	471887
9175976	GMC	415995!
918083	WILYS	472015!
9180LPD	JN-MN	450177*
9180LUP	JN-MN	450177
9181LUP	JN-MN	3395!
9181LUP	JN-MN	352444
9182LPD	JN-MN	415995!
9182LUP	JN-MN	415995!
918405	AMC	415960
918405	WILYS	415960!
918579C1	SOLAR	472397!
9186LUP	JN-MN	471647
91870273	SOLAR	471413!
918702C1	SOLAR	471413!
9187258	GMC	415995!
918741	WILYS	470088
9187LPD	JN-MN	471619!
9187LUP	JN-MN	471619!
9188401	GMC	416102
9188402	GMC	8724S
9188LPD	JN-MN	415302*
9188LUP	JN-MN	415302
9189LPD	JN-MN	472572!
9189LUP	JN-MN	472572!
919084C1	SOLAR	471619!
91909	IH	470712!
9190LPD	JN-MN	473240!*
9190LUP	JN-MN	473240!
9190N	NATL	3604
919250	CHRYS	3210
919277	CHRYS	493291
919317	AMC	7245
919317	WILYS	7245
919345	CATER	417598
9193LPD	JN-MN	417490*
9193LUP	JN-MN	417490
9195848	GMC	455655!
9195902	EUCLD	416383
9195902	GMC	416383
919607	WILYS	6808N
91D1175	FORD	410987!
91T119	KELSE	5924
91T1190	FORD	5924
91T1190	KELSE	5924
91X6113	GARLK	254270
91X6279	GARLK	340817
91X9518	GARLK	441130
91X9722	GARLK	340136
92007	MCCOR	5751
920110	LUF	471647
920116	MICH	55222=
9201162	UNIVE	55222=
920140	LUF	471766!
92017	MCCOR	455249!
92022	MCCOR	415035
92022	MCCOR	415035!
92025	MCCOR	415196!
92026	MCCOR	415034!
92027	MCCOR	416345!
92027	MCCOR	455033
92028	MCCOR	455022
92029	MCCOR	455134!
92030	MCCOR	415027
92032	MCCOR	5871
92033	MCCOR	415437
920330	LUF	417316!
9203928	GMC	40360S!
920400	LUF	476470
920400	LUF	476470!
92041	MCCOR	415437
92041	MCCOR	415437!
92042	MCCOR	415023
92048	MCCOR	6077
92050	WHITE	415960!
92059	MCCOR	415023
9205LPD	JN-MN	415025*
9205LUP	JN-MN	415025
92064	CHRYS	472924!
92065	CHRYS	471466!
9206599	GMC	472016
9206601	GMC	415137!
9206601	GMC	418028
9206856	EUCLD	473243
9206856	GMC	473243
9206858	EUCLD	417343!
9206858	GMC	417343!
9206860	GMC	8427=
9207074	GMC	416102
9207290	EUCLD	415035
9207290	GMC	415035
9207290	GMC	475845!
920748X1	IH	415938
92076	MCCOR	415036
92077	MCCOR	416891!
9207726	GMC	415052
9207727	GMC	8996S=
92078	MCCOR	417205!
9207835	EUCLD	417602!
9207835	GMC	417602!
9207895	GMC	415938
92079	MCCOR	415035
92081	MCCOR	415021
92082	MCCOR	415025
92083	MCCOR	455026
9208350	GMC	417344!
9208384	GMC	415284
92084	MCCOR	415027
92084	MCCOR	415027!
9208405	EUCLD	416921!
9208405	GMC	416921!
92085	MCCOR	55028
9208522	GMC	415988
92086	MCCOR	416125!
920860	LUF	415551
92087	MCCOR	55030
9208737	EUCLD	416381
9208737	GMC	416381
92088	MCCOR	416339
92088	MCCOR	455031!
92089	MCCOR	415036
92090	MCCOR	416891!
92091	MCCOR	415150!
92092	MCCOR	417196!
92093	MCCOR	416332!
92094	MCCOR	417205!
92095	MCCOR	417504
92096	MCCOR	417211!
92097	MCCOR	417967!
92098	MCCOR	415187
92099	MCCOR	417356!
92099	MCCOR	455188
9209BPD	JN-MN	455584
92100	MCCOR	417357
92100	MCCOR	455192!
9210010	COC	472258!
9210010	WHITE	472258!
9210080	COC	471231!
9210080	WHITE	471231!
9210090	COC	471192
9210090	MINNM	471192
9210090	WHITE	471192
92101	MCCOR	472157!
92101	MCCOR	472157
92101-0002	WHITE	HU024A
92101-0005	WHITE	HU149A
92101-0006	WHITE	HU149A
92101-0007	WHITE	HU149A
92101-0008	WHITE	HU149A
92101-5015	VOLWH	HU009A
9210120	COC	411394!
9210120X	COC	411394!
921015C1	IH	472924!
92101S	MCCOR	472157
92102	MCCOR	416888!
92102-0001	WHITE	730149
921030001	WHITE	B300
92104	MCCOR	415263
92105	MCCOR	55353
92106	MCCOR	415394
92107	MCCOR	415437
92107207	COC	418028!
92107407	COC	200354
9210750	WHITE	472185!
92107507	COC	472185!
9210950	WHITE	473215!
9210969	GMC	8724S
9211020	WHITE	416888!
9211080	WHITE	471763
9211347	GMC	415146!
9211347	GMC	415991
92114	WHITE	473238
9212	TMTR	40071S
9212013A	HARWA	92X120X13
92122	MCCOR	415142
92125	MCCOR	417210!
92126	MCCOR	417355!
92127	MCCOR	455189
92128	MCCOR	55199=
9212SS	JN-MN	330699
9213	TMTR	473215!
92130	MCCOR	7208S
92131	MCCOR	6270
92133	MCCOR	416556!
92133	MCCOR	472157
92135	MCCOR	45031S
92136	MCCOR	415379
92136	MCCOR	415379!
92137	MCCOR	417498
92139	MCCOR	6465
92140	MCCOR	6465
92142	MCCOR	455612=
921428C1	IH	472015!
92145	MCCOR	417506
9214517	GMC	416865!
92146	MCCOR	455024
92148	MCCOR	370002A
92149	MCCOR	455037
92150	MCCOR	416130!
92152	MCCOR	415295
92155	MCCOR	415697!
92155	MCCOR	455547
92158	MCCOR	455472=
921584	CHRYS	410987!
921584	GMC	410987!
92159	MCCOR	417494
921599	MIX	470328
921599	MIX	481213!
9216177	GMC	472439
92162	MCCOR	55236
92163	MCCOR	415711
92166	MCCOR	415437
92168	MCCOR	6638S
92170	MCCOR	417353!
92171	MCCOR	415379
92172	MCCOR	417211!
92173	MCCOR	455191
92174	MCCOR	415035
92175	MCCOR	6612S
92176	MCCOR	6644
92180	MCCOR	416888!
92182	MCCOR	417355!
92182	MCCOR	485497
92185	MCCOR	6855N=
92186	MCCOR	6864S
92189	MCCOR	417210!
9218LPD	JN-MN	473473
9218LUP	JN-MN	473473
92190	MCCOR	455019!
92191	MCCOR	417354!
92192	MCCOR	417493
92193	MCCOR	417495
9219362	EUCLD	416158
9219362	GMC	416158
92194	MCCOR	327303!
92195	MCCOR	455858
92196	MCCOR	415379
92197	MCCOR	415379
92198	MCCOR	415379!
92198	MCCOR	415379
92199	MCCOR	45187S
9219LPD	JN-MN	471255!
9219LUP	JN-MN	471255!
922	SUL	416153!
92200	MCCOR	55646=
92201	MCCOR	6592S=
922034R91	IH	471271!
92204	MCCOR	455134

! Industrial Size/Type * Minor Width Difference

= The U.S. customer service number is 877-4-TIMKEN. The Canadian customer service numbers are 800-565-4927 (English) and 800-565-0438 (French-Canadian).

Mfr. No.	Name	Zero Duplication or Recommended Industrial
92205	AM WH	**456105**
92205	MCCOR	**455194**
92206	MCCOR	2055
92208	MCCOR	370015A
92209	MCCOR	**416891**!
92210	MCCOR	**415036**
92211	MCCOR	7354N
92214	MCCOR	**412920**
922140	WILYS	**254270**
92216	MCCOR	7300S
92217	MCCOR	**415379**!
92218	MCCOR	455037
92219	MCCOR	417513
92220	MCCOR	**416888**
92221	MCCOR	**416888**
92222	MCCOR	7692S
92223	MCCOR	**415035**
92224	MCCOR	**327303**!
92225	MCCOR	455197N
92225	WHITE	**417487**!
92225	WHITE	**417487**
92226	MCCOR	335924N
92228	MCCOR	8549S
922309	WOOL	**455576**!
922409	CHRYS	**470774**!
9224454	GMC	**472397**!
92245	WHITE	50528
922474R91	IH	**410825**
9228A	C-R	**455151**
92298	CHRYS	**412119**
9234	ALLCH	**471570**!
9234555	GMC	**416107**!
9235	C-R	340787
9235168	EUCLD	**415035**!
9235168	GMC	**415035**!
9235169	EUCLD	**470530**!
9235169	GMC	**470530**!
9235444	GMC	J1107
9235446	GMC	J1128
923561C1	IH	**471341**
9237R	JN-MN	**470954**!
923896	WILYS	**473229**
92390	WHITE	**415001**!
924	CALI	**415219**
9240	CALI	**415219**
9240LPD	JN-MN	**470954**!
9240LUP	JN-MN	**470954**!
9241134	GMC	**471652**
924117	MICH	55223=
9241175	UNIVE	55223=
9241256	EUCLD	**415938**
9241256	GMC	**415938**
9243	C-R	340787
9243143	EUCLD	**471341**!
9243143	GMC	**471341**!
9244	C-R	**471015**!
924432	CHRYS	**480630**!
9244604	EUCLD	416798=
9244604	GMC	416798=
924635	CHRYS	5M544
925	CALI	**416154**!
9250	CALI	**416154**!
9251463	GMC	40389S
925172R91	IH	370007A
925173R91	IH	370007A
925180	WILYS	8430S
92535	C-R	**415219**
92536	C-R	**415219***
92540	C-R	**415219**
92541	C-R	**415219**
92541	CHRYS	**470954**
92542	C-R	**415219**
92542	WHITE	**472394**
92550	C-R	**415219**
92551	C-R	**415219***
9255535	TERX	**416394**
9256047	GMC	416100=
9256879	GMC	**412871**!
92570	C-R	8996S=
9257386	GMC	416257
92574	C-R	8996S=
9261	C-R	**471571***
926162	CHRYS	**471554**!
92631	WHITE	**416654**!
92648	WHITE	450467
9266274	GMC	710015
926633	CHRYS	6597S
9266772	GMC	710018
926724	C-R	**455406**!
926724M1	C-R	**455406**!
926741	CHRYS	**471689**!
9267525	GMC	710042
9267529	GMC	710011
92680	C-R	**417600**
92680M1	C-R	**417600**
92688	C-R	455475
9269316	GMC	710031
927283	ALLCH	**417474**
927367	CHRYS	**410308**!
9273LPD	JN-MN	**471737***
9273LUP	JN-MN	**471737**
92742	WHITE	**472924**!
9274473	GMC	**417082**
9276	C-R	**471571***
927645	WILYS	340413
9276A	C-R	**472179**
9276LPD	JN-MN	**471705**!
9276LUP	JN-MN	**471705**!
92774	WHITE	**415960**
927888	ALLCH	**473212**!
927889	ALLCH	**471763**
927890	ALLCH	**415023**
92794	WHITE	**415960**
927946	ALLCH	**473016**!
927947	ALLCH	**471424**!
927948	ALLCH	**417349**
927965C1	IH	**416888**
92805801	ALLCH	**417247**!
928114	CHRYS	6127
928118	MICH	55224=
9281187	UNIVE	55224=
928283	ALLCH	**472826**!
9283	C-R	**471571***
928436	ALLCH	**415854**
9284365	ALLCH	**415854**
92846201	ALLCH	487056=
928499	ALLCH	**473211**=
9286RRR	SPG	6808N
928704	CHRYS	**415449**!
928813	ALLCH	481901=
928831	ALLCH	**415150**!
928854	ALLCH	**470774**!
928855	ALLCH	**415458**!
92894	CATER	J1123
92894	TMTR	J1123
92895	CATER	**412473**!
92895	TMTR	**412473**!
928M6700B2A	FORD	3771
928M6701B2A	FORD	3772
9290	C-R	**471571**
9290LPD	JN-MN	**415327**
9291	C-R	**471571**
929230	ALLCH	450463
9292LPD	JN-MN	**416657**
929332	ALLCH	**472018**=
929462	ALLCH	204013
9298	C-R	**471571**
92999	C-R	**470954**!
92TM6701A1A	FORD	**473573**
92TM6701A2A	FORD	**473573**
92X120X13	SIMRT	92X120X13
92X120X13SC	TRSCM	92X120X13
92X120X13TC	TRSCM	92X120X13
92X213	GARLK	**471267**!
92X6100	GARLK	**471760**
92X6113	GARLK	1049
92X6169	GARLK	**471652**
92X7518	GARLK	**471766**!
92X7521	GARLK	6668S
92X9502	GARLK	6863S!
92X9509	GARLK	**471264**!
92X9515	GARLK	**471267**!
92X9528	GARLK	6668S
92X9530	GARLK	**472213**
93020	GROVE	**416891**!
9302BJR	SPG	**473228**
9303	C-R	**471571**
9304	C-R	**471571**
9304	C-R	**471571**
930428	ALLCH	**476470**
930428	ALLCH	**476470**!
9304LUP	JN-MN	**416239**!
930569C1	IH	**417278**
930570C1	IH	**416039**
9305LPD	JN-MN	**481397***
9305LUP	JN-MN	**481397**
9306	C-R	**471647***
93068	WHITE	**418028**
93068	WHITE	455137!
9307	C-R	**471647**
930836	ALLCH	**450084**!
930838	ALLCH	**417278**
93088	WHITE	**418028**
93088	WHITE	455137!
93095	WHITE	**417159**
931030	ALLCH	**471341**!
93103001	ALLCH	**471341**!
931031	ALLCH	**473423**
93103101	ALLCH	**473423**
931041	ALLCH	**481181**!
9310S	MINNM	**470530**!
93113	REULD	**474255**
93115	REULD	**471413**!
93117	REULD	**471835**!
93118	REULD	**473224**!
93123	REULD	**471141**!
931483	ALLCH	**416282**
9314831	ALLCH	**416282**
931484	ALLCH	**416664**!
9315031	ALLCH	472065=
931504	ALLCH	**472324**!
9316171	ALLCH	**471835**!
931634	AMC	**471504**
931856	ALLCH	**417316**=
9318A	C-R	417267
9319LPD	JN-MN	**416271**!
9319LUP	JN-MN	**416271**!
93203	AM WH	**416654**!
93229	WHITE	**455151**
9323	C-R	**471647***
93233	CINMI	**471689**!
93234	CINMI	**471570**!
93235	CINMI	**471192**
93236	CINMI	**471766**!
932407	WILYS	**410308**!
932503	ALLCH	335924N
93279	CHRYS	**410308**!
9327A	C-R	**470334**!
932887	ALLCH	442380
932892	ALLCH	443527*=
932976	ALLCH	**473441**
9330	C-R	**471647**
933062	ALLCH	**470898***
9331	C-R	**471647**
933118	ALLCH	**473212**!
93333R91	IH	**418028**
933349	ALLCH	**417621**!
93336R91	IH	**415991**!
93336R91	IH	**415991**
933645	ALLCH	**470565**!
9339	C-R	**471647**
9339LPD	JN-MN	**471643**!
9339LUP	JN-MN	**471643**!
934	CALI	**415036**
934023TD0	SPG	934023
9342SS	JN-MN	**415035**
934356	WILYS	**416738**!
934356	WILYS	450096
9343SS	JN-MN	**453182**
93441	WHITE	**476470**
9345LPD	JN-MN	**472397**!
9345LUP	JN-MN	**472397**!
9346	C-R	472951
9346	C-R	**474252**
9347	C-R	472951*
9347	C-R	**474252**!
9348	C-R	472951
9348	C-R	**474252**
934E	CALI	**416892**!
934J	CALI	7354N
93506	AMC	240151
93515R91	IH	**473238**
93516R91	IH	470059
93516R91	IH	**470380**!
93517R91	IH	**470530**!
93518	AMC	**474278**!
93518R91	IH	**411253**!
9351LPD	JN-MN	417780
9351LUP	JN-MN	417780
9356	EATON	**417344**!
9356	TRUK	**417344**!
935612	WILYS	8676S
935735	EATON	712625
935797R91	IH	200885
935869R92	IH	**472185**!
9360LPD	JN-MN	**417598***
9360LUP	JN-MN	**417598**
9361LPD	JN-MN	**416158**
9361LUP	JN-MN	**416158**
9362	C-R	472951
9362	C-R	**474252**
93625	SELAS	4148
9363	C-R	472951
9363	C-R	**474252**
9363LPD	JN-MN	**470606**!
9363LUP	JN-MN	**470606**!
9368LPD	JN-MN	**417351**!
9368LUP	JN-MN	**417351**!
9371	C-R	472951
9371	C-R	**474252**
9372	C-R	472951
9372	C-R	**474252**
9374LPD	JN-MN	**417073***
9374LUP	JN-MN	**417073**
93750	C-R	415871
93751	C-R	415871*
93756	C-R	415871
9377	CHAMP	341022

! Industrial Size/Type * Minor Width Difference

= The U.S. customer service number is 877-4-TIMKEN. The Canadian customer service numbers are 800-565-4927 (English) and 800-565-0438 (French-Canadian).

Mfr. No.	Name	Zero Duplication or Recommended Industrial
93801	*CATER*	J1137=
938031	*AMC*	482267
938031	*WILYS*	482267
938151	*AMC*	8430S
938151	*AMGEN*	8430S
938151	*WILYS*	8430S
93823	*CATER*	**471737**
93823	*TMTR*	**471737**
93824	*CATER*	**416557**
9387	*C-R*	472951
9387	*C-R*	**474252**
938728	*C-R*	**455121**
938728M1	*C-R*	**455121**
938963C1	*IH*	**417254**
938964C1	*IH*	**415551**
93921	*CATER*	**473237!**
93921	*TMTR*	**473237!**
939334	*WILYS*	**410308!**
939335	*WILYS*	**410308!**
9394LPD	*JN-MN*	**471835!**
9394LUP	*JN-MN*	**471835!**
939558C91	*IH*	**415938**
939570	*NOK*	112X140X13
9395LPD	*JN-MN*	**473236!***
9395LUP	*JN-MN*	**473236!**
9396LPD	*JN-MN*	**473462**
9396LUP	*JN-MN*	**473462**
939734	*AMC*	**416738!**
939734	*AMC*	450096
939734	*WILYS*	**416738!**
939734	*WILYS*	450096
9397LPD	*JN-MN*	**450472!***
9397LUP	*JN-MN*	**450472!**
9398LPD	*JN-MN*	**473243***
9398LUP	*JN-MN*	**473243**
9399A	*C-R*	**417621=**
9399LPD	*JN-MN*	**417349**
9399LUP	*JN-MN*	**417349**
93FF-6700-AA	*FORD*	712103
93X214	*GARLK*	**471267!**
93X6113	*GARLK*	1049
93X6169	*GARLK*	**471652**
93X6171	*GARLK*	**471692!**
93X8887	*GARLK*	**471413!**
93ZT-3K169-A9A	*FORD*	710443
93ZT-3K169-A9B	*FORD*	710443
94001-0014	*WHITE*	370001A
94001-0015	*WHITE*	370006A
94001-0016	*WHITE*	386025A
94001-0016	*WHITE*	**416158**
94001-0017	*WHITE*	370023A
94001-0029	*WHITE*	370001A
94001-0030	*WHITE*	370003A
94001-0032	*WHITE*	386025A
94001-0032	*WHITE*	**416158**
94001-0034	*WHITE*	370003A
94001-0038	*WHITE*	370048A
94001-0038	*WHITE*	380048A
940010003	*WHITE*	370121A
940010004	*WHITE*	370001A
940010006	*WHITE*	386025A
940010006	*WHITE*	**416158**
940010007	*WHITE*	370120A
940010010	*WHITE*	370001A
940010011	*WHITE*	370006A
940010013	*WHITE*	370006A
940010019	*WHITE*	370003A
940010022	*WHITE*	370003A
940010028	*WHITE*	370003A
94001006	*WHITE*	386025A
94001006	*WHITE*	**416158**
940013602	*WHITE*	370005A
9400LPD	*JN-MN*	**417273***
9400LUP	*JN-MN*	**417273**
9401LPD	*JN-MN*	417780*
9401LUP	*JN-MN*	417780
94020129	*GMC*	474133
94020130	*GMC*	1987
94020131	*GMC*	1990
94020258	*GMC*	1949
94020262	*GMC*	225020
94020262	*GMC*	50X68X8!
94021237	*GMC*	473812
94021238	*GMC*	**473179!**
94022595	*GMC*	1945
94022595	*GMC*	228480
94024633	*GMC*	1990
94025810	*GMC*	710440
94026324	*GMC*	1945
94026324	*GMC*	228480
94027655	*GMC*	710201
940276555	*GMC*	710057
94027751	*GMC*	413818
94028351	*GMC*	224045
94029129	*GMC*	710167
94029584	*GMC*	222860
9402LPD	*JN-MN*	**415034!**
9402LUP	*JN-MN*	**415034!**
94030585	*GMC*	712005
94034121	*GMC*	710087
94034122	*GMC*	710085
94034131	*GMC*	710088
94039516	*GMC*	710086
94043754	*GMC*	710080
94047451	*GMC*	710090
94047499	*GMC*	710084
94049996	*GMC*	710089
94051420	*GMC*	3476
94054640	*GMC*	710090
940555	*AMC*	**472560N**
94055826	*GMC*	710350
94057307	*GMC*	710084
94057308	*GMC*	710089
94061761	*GMC*	710088
94068R91	*IH*	340413
94069R91	*IH*	340787
94070R91	*IH*	**472311!**
94071R91	*IH*	240151
94072R91	*IH*	240356
94073R91	*IH*	**323138!**
94074R91	*IH*	**474276!**
94075R91	*IH*	**450400**
94076R91	*IH*	340413
94076R92	*IH*	340413
94077R91	*IH*	340787
94078R91	*IH*	240414
94079R91	*IH*	**472560N**
9408	*C-R*	**450039**
94080R91	*IH*	240356
94081R91	*IH*	6597S
94082R91	*IH*	**474276!**
94083R91	*IH*	**450400**
9409	*C-R*	**450039***
94099457	*GMC*	710085
9409LPD	*JN-MN*	**413247!**
9409LUP	*JN-MN*	**413247!**
94101493	*GMC*	710081
94108633	*GMC*	710098
94108663	*GMC*	225010
9410LPD	*JN-MN*	**415027!**
9410LPD	*JN-MN*	**415027**
9410LUP	*JN-MN*	**415027!**
9410LUP	*JN-MN*	**415027**
9411	*C-R*	222430
94111750	*GMC*	228480
9411750	*GMC*	228480
94124173	*GMC*	223220
94129884	*GMC*	228700
941322	*CLARK*	40067S=
94140686	*GMC*	710078
94144455	*GMC*	221735
94144614	*GMC*	1174
94144614	*GMC*	38X52X8.5!
94145906	*GMC*	710243
94146205	*GMC*	1012N
9415C	*DIA*	**470565!**
9415LPD	*JN-MN*	**471267!**
9415LUP	*JN-MN*	**471267!**
941664	*WILYS*	**471652**
941664	*WILYS*	482208!
9418LPD	*JN-MN*	415425
941907R1	*IH*	6403=
94214912	*GMC*	224025
94214913	*GMC*	710060
94215220	*GMC*	1981
94216107	*GMC*	1174
94216107	*GMC*	710309
9421LPD	*JN-MN*	450398
9421LPD	*JN-MN*	**471267!**
9421LUP	*JN-MN*	450398
9421LUP	*JN-MN*	**471267!**
9422	*FULLE*	**417316!**
94223026	*GMC*	1987
94224713	*GMC*	1949
9422LPD	*JN-MN*	**415991**
9422LPD	*JN-MN*	455146!
9422LUP	*JN-MN*	**415991**
9422LUP	*JN-MN*	455146!
94238096	*GMC*	**470380!**
94238096	*GMC*	472189A!
9423LPD	*JN-MN*	**471795**
9423LUP	*JN-MN*	**471795**
94240603	*GMC*	710167
94240929	*GMC*	222220
94248117	*GMC*	474230
94249521	*GMC*	222835
94249521	*GMC*	28X44X6!
94251171	*GMC*	1217
94253509	*GMC*	3667
94257	*CHRYS*	9376
94258894	*GMC*	710377
9425SS	*JN-MN*	**416892!***
942635	*CLARK*	**471526!**
94267	*CHRYS*	7188S
9427S	*SPG*	6592S=
9428	*FULLE*	**417316!**
942901	*AMC*	9344S
942901	*WILYS*	9344S
94294413	*BUC-E*	**416167!**
94326441	*GMC*	1990
94327062	*GMC*	1981
94327063	*GMC*	228700
94334860	*GMC*	223220
94336316	*GMC*	710080
94339	*CHRYS*	353135
94339	*CHRYS*	**474278!**
943661	*AMC*	**475384**
94367958	*GMC*	710080
94367960	*GMC*	710081
943710	*AMC*	**416282**
943710	*WILYS*	**416282**
94373765	*GMC*	710390
94379067	*GMC*	222835
94380745	*GMC*	221620
94380745	*GMC*	221720
94383	*AM WH*	**472636!**
94397	*AM WH*	**471255!**
94399R91	*IH*	**415085!**
94399R91	*IH*	456648
94400	*UNIT*	**456105**
94401	*UNIT*	**415035**
94401	*UNIT*	**415035!**
944015	*UNIT*	**472636!**
94402	*UNIT*	**472157!**
94402	*UNIT*	**472157**
944024	*UNIT*	**471466!**
944026	*UNIT*	**471570!**
944027	*UNIT*	**415001!**
944028	*UNIT*	**450639**
944029	*UNIT*	**415295**
94403	*UNIT*	**450279**
944030	*UNIT*	**415483!**
944031	*UNIT*	**415960!**
944033	*UNIT*	**470898!**
944035	*UNIT*	**471649!**
944037	*UNIT*	**476470**
944038	*UNIT*	**415449!**
94403D	*UNIT*	**415483!**
94404	*UNIT*	**417349**
944041	*UNIT*	**416891!**
944044	*UNIT*	**455194**
94405	*UNIT*	**472319**
944050	*UNIT*	**415991**
944050	*UNIT*	455146!
944051	*UNIT*	**415995!**
944052	*UNIT*	**415023**
944059	*UNIT*	**415645!**
944059	*UNIT*	455104
94406	*UNIT*	**473215!**
944060	*UNIT*	**417539!**
944061	*UNIT*	**415294!**
944064	*UNIT*	**415551**
94407	*UNIT*	**415034!**
944070	*UNIT*	**450400**
94407711	*GMC*	710168
944078	*UNIT*	455203
94408	*UNIT*	**473439!**
944080	*UNIT*	**417539!**
94408083	*GMC*	710268
944081	*UNIT*	**417603!**
944084	*UNIT*	**470898**
94409	*UNIT*	**417514**
9441	*FULLE*	**450084!**
944102	*UNIT*	**470954!**
94411	*UNIT*	**417601**
944112	*UNIT*	450965
944116	*UNIT*	**416865!**
94412	*UNIT*	**416888!**
944125	*UNIT*	**417541**
944128	*UNIT*	200110
94413	*UNIT*	**416339**
94413	*UNIT*	455031!
944130	*UNIT*	**417191**
944130	*UNIT*	455165!
944131	*UNIT*	**455194**
94414	*UNIT*	**417602!**
94443	*CHRYS*	**471827**
94450127	*GMC*	1012N
94459593	*GMC*	710098
9445LPD	*JN-MN*	**471821!**
9445LUP	*JN-MN*	**471821!**
9445S	*SPG*	9449
94464555	*GMC*	710192
94475250	*GMC*	1953
94482157	*GMC*	224052
94495	*C-R*	240X270X15!
94495	*C-R*	240X270X16!
9450	*C-R*	**450039**

! Industrial Size/Type * Minor Width Difference

= The U.S. customer service number is 877-4-TIMKEN. The Canadian customer service numbers are 800-565-4927 (English) and 800-565-0438 (French-Canadian).

Mfr. No.	Name	Zero Duplication or Recommended Industrial
9450	*FULLE*	**412119**!
9452LPD	*JN-MN*	**412871**!
9454LPD	*JN-MN*	**473225**!
9454LUP	*JN-MN*	**473225**!
945702	*AMC*	40769S
945710	*AMC*	9316
9460LPD	*JN-MN*	**471692**!
9460LUP	*JN-MN*	**471692**!
9464A	*C-R*	**471255**!
94658170	*GMC*	710237
9465A	*C-R*	**471255**!
94660	*C-R*	710800
947RC	*SUL*	**471649**!
94804	*CHRYS*	7412S
9483LPD	*JN-MN*	**473228**!
9483LUP	*JN-MN*	**473228**
94840006	*GMC*	1987
94840023	*GMC*	227045
94840076	*GMC*	223235
94840381	*GMC*	1180
94840381	*GMC*	41X55X7!
94840436	*GMC*	710156
94840471	*GMC*	710154
94840476	*GMC*	710155
94840505	*GMC*	221510
94840623	*GMC*	320603
94840624	*GMC*	710110
94840652	*GMC*	223831
94840654	*GMC*	5696
94840770	*GMC*	1015N
94840869	*GMC*	221207
94841023	*GMC*	710110
94841823	*GMC*	320603
94843040	*GM*	422
94843981	*GMC*	1180
94843981	*GMC*	41X55X7!
94845317	*GMC*	1180
94846026	*GMC*	710110
94846072	*GMC*	710109
94846345	*GMC*	4898
94847440	*GMC*	5696
94847441	*GMC*	1993
94850395	*GMC*	223235
94850807	*GMC*	1987
94851798	*GMC*	227045
94851892	*GMC*	710109
94851936	*GMC*	5696
94851937	*GMC*	4898
94852835	*GMC*	222630
94854705	*GM*	35292
94854723	*GMC*	710412
94856492	*GMC*	5696
948609	*AMC*	**416738**!
948609	*WILYS*	**416738**!
9488LPD	*JN-MN*	**416921**!
9488LUP	*JN-MN*	**416921**!
9495C	*DIA*	**410737**!
9495CX	*DIA*	**410737**!
94RU-1123	*MACK*	730149
94RU-19309	*MACK*	730004
94RU-262	*MACK*	730003
94RU-263	*MACK*	733067
94RU-263P1	*MACK*	733067
94RU-263P2	*MACK*	730149
94RU-264	*MACK*	730006
94RU-265	*MACK*	730005
94RU-266	*MACK*	730019
94RU-267	*MACK*	730006
94RU-278	*MACK*	730026
94TM-6701-A1A	*FORD*	**473573**
94X215	*GARLK*	**471570**!
94X287	*GARLK*	**471224**!
94X359	*GARLK*	**471763**
94X4600	*GARLK*	**474256**
94X5051	*GARLK*	**471276**
94X6176	*GARLK*	**473259**
94X6282	*GARLK*	476511=
94X6329	*GARLK*	476519=
94X6486	*GARLK*	476510=
94X6557	*GARLK*	**471379**
94X6639	*GARLK*	**473197**
94X6738	*GARLK*	**472239**
94X7033	*GARLK*	**470954**!
94X7198	*GARLK*	472237=
94X760	*GARLK*	**473231**!
94X8005	*GARLK*	476512
94X89	*GARLK*	**471264**!
94X96	*GARLK*	**471612**
9500	*C-R*	222410
9500	*C-R*	24X35X7!
95003	*MCCOR*	**417278**
95005	*MCCOR*	417537
95006	*MCCOR*	**415041**
95006	*SPG*	**417344**!
95011	*MCCOR*	370036A
95012	*MCCOR*	417516
95013	*MCCOR*	**417223**
95019	*MCCOR*	**415351**!
9502	*C-R*	24X36X7V
95022	*MCCOR*	5M544
95023	*MCCOR*	**416865**!
95024	*MCCOR*	**417514**
95025	*MCCOR*	**415045**!
95026	*MCCOR*	**416892**!
95028	*MCCOR*	**415138**!
95029	*MCCOR*	**415058**
95030	*MCCOR*	**417238**
95031	*MCCOR*	415060
95031	*MCCOR*	455060
95032	*MCCOR*	**415066**
95033	*MCCOR*	456890
95034	*MCCOR*	**417269**!
95035	*MCCOR*	**417273**
95036	*MCCOR*	**416865**!
95037	*MCCOR*	**417546**!
95038	*MCCOR*	**416167**!
95039	*MCCOR*	**415645**!
95039	*MCCOR*	455104
9503SS	*JN-MN*	**471535**!*
9504	*C-R*	24X37X8
95040	*MCCOR*	**416154**!
95041	*MCCOR*	**417539**!
95042	*MCCOR*	**416153**!
95043	*MCCOR*	**417538**
95045	*MCCOR*	**415371**
95045S	*MCCOR*	**415371**
95046	*MCCOR*	**415284**
95047	*MCCOR*	455402=
95048	*MCCOR*	**417262**!
9505	*C-R*	24X38X7
95050	*C-R*	**417606**
95052	*MCCOR*	5M497
95052	*OLIVE*	**471649**!
95054	*MCCOR*	**415047**
95056	*MCCOR*	417267
95057	*MCCOR*	45637S
95059N	*MCCOR*	415213N
95060	*C-R*	**417606***
95060	*MCCOR*	**417525**
95061	*MCCOR*	**417247**!
95062	*C-R*	**417606**
95062	*MCCOR*	**417507**!
95062	*MCCOR*	**417507**
95063	*MCCOR*	456618
95064	*MCCOR*	**415043**
95065	*MCCOR*	55367=
95066	*MCCOR*	455614
95068	*MCCOR*	**417541**
95069	*MCCOR*	**416070**
95070	*MCCOR*	**415371**
95070	*SPG*	**416865**!
95071	*MCCOR*	**415284**
95075	*MCCOR*	**415284**
95076	*MCCOR*	455251H
95076S	*MCCOR*	455251H
95077	*MCCOR*	**417518**
95079	*MCCOR*	**416158**
95080	*C-R*	**417601**
95080	*MCCOR*	**415725**!
95080M1	*C-R*	**417601**
95081	*C-R*	9555S
95081	*MCCOR*	416163
95082	*MCCOR*	6635S
95084	*MCCOR*	6643S
95086	*MCCOR*	**417252**
95087	*MCCOR*	75251S
95089	*MCCOR*	415060
95089	*MCCOR*	455060
9508A	*C-R*	7208S
95090	*MCCOR*	417548
95091	*MCCOR*	415064
95094	*MCCOR*	**416892**
95094	*SPG*	**416444**
95095	*MCCOR*	6872S
95096	*MCCOR*	**417254**
95098	*MCCOR*	**417509**
95099	*MCCOR*	455290
95100	*AM WH*	**471652**
95102	*MCCOR*	**415284**
95103	*MCCOR*	370005A
95104	*MCCOR*	455956H
95105	*MCCOR*	5487
95106	*MCCOR*	355200
95106	*MCCOR*	**416888**!
95107	*MCCOR*	**416865**
9510LPD	*JN-MN*	**415034**!
9510LUP	*JN-MN*	**415034**!
95111	*MCCOR*	**417520**
9511513B	*HARWA*	95X115X12
95118	*MCCOR*	7866S
9511LPD	*JN-MN*	**472475***
9511LUP	*JN-MN*	**472475**
9512512B	*HARWA*	95X125X12
9512512C	*HARWA*	95X125X12
9512513B	*HARWA*	95X125X12
951292	*CLARK*	**473473**
951296	*WILYS*	340771
9512LPD	*JN-MN*	**455026***
9512LUP	*JN-MN*	**455026**
9514	*C-R*	222430
95147	*SPG*	**415449**!
9514LPD	*JN-MN*	**415683**
9514LUP	*JN-MN*	**415683**
9515	*C-R*	222430
9515	*C-R*	24X40X7!
9516	*NATL*	8705S
951644	*BR-ST*	**471649**!
9517	*C-R*	24X40X6V
95177	*SPG*	**415379**
9520LPD	*JN-MN*	**471760***
9520LUP	*JN-MN*	**471760**
9521	*C-R*	222430
95216	*WHITE*	**417487**
95223	*OLIVE*	345214=
95226	*CHRYS*	**471341**!
9523LPD	*JN-MN*	**415021**
9523LUP	*JN-MN*	**415021**
952742	*WAUKE*	**471787**!
95294413	*BUC-E*	**415001**!
9530	*C-R*	24X42X8
953019R1	*IH*	**470380**!
953024	*CLARK*	**470898**!
953029	*CLARK*	**471785**!
953030	*CLARK*	**471354**!
953032	*CLARK*	450165
953032	*CLARK*	**471801**!
953035	*CLARK*	**471341**!
953038	*CLARK*	**415001**!
953039	*CLARK*	**473225**!
953040	*CLARK*	**473438**
953043	*CLARK*	**450084**!
953044	*CLARK*	**473460**
953045	*CLARK*	**415302**
953046	*CLARK*	**416921**!
953047	*CLARK*	**417539**!
953048	*CLARK*	**415551**
953053	*CLARK*	470050
95307	*AM WH*	**415449**!
9530LPD	*JN-MN*	**415725**!
9530LUP	*JN-MN*	**415725**!
9533	*C-R*	24X42X7
95357	*EATON*	370023A
9537	*FULLE*	240733
9540	*C-R*	24X45X8
95401	*SPG*	**416666**
954014TX	*SPG*	954014T
9541LPD	*JN-MN*	**455151**
9541LUP	*JN-MN*	**455151**
9541RRR	*SPG*	7457N
954216TD	*SPG*	954216T
9542LPD	*JN-MN*	455022*
9542LUP	*JN-MN*	455022
9543LPD	*JN-MN*	**416654**!
9543LUP	*JN-MN*	**416654**!
9545LPD	*JN-MN*	**417238**
9545LUP	*JN-MN*	**417238**
954631	*SPICE*	**417356**!
954631	*SPICE*	455188
9546LPD	*JN-MN*	**470565**!*
9546LUP	*JN-MN*	**470565**!
9547LPD	*JN-MN*	**476470**
9547LUP	*JN-MN*	**476470**
9548LPD	*JN-MN*	**417362**!
9548LUP	*JN-MN*	**417362**!
9550	*C-R*	24X46X8
9550LPD	*JN-MN*	**472439***
9550LUP	*JN-MN*	**472439**
955497R91	*IH*	**455079**!
955498R91	*IH*	**473463**
95557R91	*IH*	**470565**!
9556SSR	*SPG*	**473234**
955776R1	*IH*	**450400**
9558	*C-R*	24X47X7
9558LPD	*JN-MN*	**471763**
9558LUP	*JN-MN*	**471763**
955A4	*WHITE*	408
9560	*C-R*	24X47X7
95612	*CHRYS*	**410308**!
95612	*CHRYS*	473468
9565	*HYST*	**415027**!
9565	*HYST*	**415027**
956666	*CHRYS*	**410102**
9569LPD	*JN-MN*	**471466**!
9569LUP	*JN-MN*	**471466**!
9570	*C-R*	24X48X8
957160TD0	*SPG*	39821
9575	*C-R*	24X50X8
957522R91	*IH*	**412027**

! Industrial Size/Type * Minor Width Difference

= The U.S. customer service number is 877-4-TIMKEN. The Canadian customer service numbers are 800-565-4927 (English) and 800-565-0438 (French-Canadian).

Mfr. No.	Name	Zero Duplication or Recommended Industrial
9577A	*C-R*	**415187**
957905	*CHRYS*	**417351**!
957E1190A	*FORD*	7381S
957E4233A	*FORD*	**472492**!
957E4250A	*FORD*	**470898**
9580	*C-R*	24X52X7
9581	*HYST*	**473444**!
9581156TA	*TRSCM*	**417606**
95823R91	*IH*	**470898**
95827	*CHRYS*	**482163**!
95836	*SPG*	**415995**!
95836	*SPG*	**415995**!
9584	*NATL*	370047A
9587LPD	*JN-MN*	**416125**!
9587LUP	*JN-MN*	**416125**!
958A4	*WHITE*	408
9590LPD	*JN-MN*	415060
9590LPD	*JN-MN*	455060
9590LUP	*JN-MN*	415060
9590LUP	*JN-MN*	455060
9591LPD	*JN-MN*	455612=
9591LUP	*JN-MN*	455612=
959308R1	*IH*	6590S
959308R91	*IH*	6590S
9596LPD	*JN-MN*	**473241**
9598	*FULLE*	**474276**!
95X110X10SC	*TRSCM*	95X110X10
95X110X10TC	*TRSCM*	95X110X10
95X115X12	*SIMRT*	95X115X12
95X115X12SC	*TRSCM*	95X115X12
95X115X12TC	*TRSCM*	95X115X12
95X120X12SC	*TRSCM*	95X120X12
95X120X12TC	*TRSCM*	95X120X12
95X125X12	*SIMRT*	95X125X12
95X125X12SC	*TRSCM*	95X125X12
95X125X12TC	*TRSCM*	95X125X12
95X130X12SC	*TRSCM*	95X130X12!
95X130X12TC	*TRSCM*	95X130X12!
9600LPD	*JN-MN*	**417273***
9600LUP	*JN-MN*	**417273**
96014416	*GMC*	3459
96014877	*GMC*	223540
96040460	*GMC*	223540
96040528	*GMC*	8792S
96040762	*GMC*	710343
960414R91	*IH*	6222
96051409	*GMC*	222030
96051418	*GMC*	221510
96051419	*GMC*	222030
96051420	*GMC*	710310
96051421	*GMC*	710310
96051422	*GMC*	35X62X7!
96051423	*GMC*	224462
96051423	*GMC*	44X62X8!
96051424	*GMC*	710334
96053884	*GMC*	223830
96054039	*GMC*	223540
96054039	*GMC*	35X55X11!
9605414	*GMC*	710116
96054141	*GMC*	221207
96054427	*GMC*	224462
96055290	*GMC*	710175
96057738	*GMC*	224820
96057740	*GMC*	223553
96057741	*GMC*	710523
96057742	*GMC*	**1213N**
96057743	*GMC*	710239
96057745	*GMC*	710193
96057746	*GMC*	710256
96057747	*GMC*	710240
96057748	*GMC*	710255
96059641	*GMC*	222580
96059653	*GMC*	223540
96059934	*GMC*	4904
96061234	*GMC*	710523
96061932	*GMC*	223552
96063564	*GMC*	221730
96065634	*GMC*	710334
96066239	*GMC*	221730
96066441	*GMC*	223552
96066450	*GMC*	**1213N**
96066451	*GMC*	710286
9606816980	*CHRYS*	224253
96068274	*GMC*	710310
96069122	*GMC*	4904
9608	*CLARK*	**415458**!
96101489	*GMC*	710399
96101490	*GMC*	223606
96101490M	*GMC*	710399
9611	*C-R*	481572V=
961125	*BENDI*	455310
9613	*C-R*	**451583**!
9613SKO	*SPG*	9613S
9618	*C-R*	**451583**!*
9619	*C-R*	**451583**!*
962061	*CHRYS*	**416273**!
9622	*C-R*	6324S=
962228	*CHRYS*	**473464**
962228	*CHRYS*	**473464**!
962229	*CHRYS*	480281!
96245	*C-R*	55222=
96246HX	*IH*	7107A=
962475	*CHRYS*	**471645**
9625	*C-R*	**451583**!
96250	*C-R*	55222=
96251	*C-R*	55222=
9625LPD	*JN-MN*	**471652**
9625LUP	*JN-MN*	**471652**
9626LPD	*JN-MN*	**472144**!
9626LUP	*JN-MN*	**472144**!
96290	*C-R*	**416381**
962919A	*SPG*	**415001**
96294413	*BUC-E*	**415047**
9629LPD	*JN-MN*	**415725**!*
9629LUP	*JN-MN*	**415725**!
963	*PORTR*	**415090**
9630	*C-R*	**471224**
9630LPD	*JN-MN*	481834
9634LPD	*JN-MN*	**471466**!
9634LUP	*JN-MN*	**471466**!
9635	*C-R*	**471224**
96350161	*GMC*	223606
9636LUP	*JN-MN*	**473232**!
964030R91	*IH*	203025
964144TC	*SPG*	**471689**
9643	*C-R*	450545*
9643	*GARLK*	340835
9643LPD	*JN-MN*	**480630**!
9643LUP	*JN-MN*	**480630**!
964461M1	*CHRYS*	450343
9645	*C-R*	**471648***
9646	*C-R*	**471648**
964871M1	*CHRYS*	**472185**!
964874M1	*CHRYS*	**471766**!
9649LPD	*JN-MN*	**415142**
9649LUP	*JN-MN*	**415142**
9650LPD	*JN-MN*	**471785**!
9650LUP	*JN-MN*	**471785**!
9651	*C-R*	**471648***
9651LUP	*JN-MN*	**470954**!
9652LPD	*JN-MN*	**470530**!
9652LUP	*JN-MN*	**470530**!
965326	*CHRYS*	**471647**
9653LPD	*JN-MN*	**472924**!
9653LUP	*JN-MN*	**472924**!
9654LPD	*JN-MN*	**416476**!
9654LUP	*JN-MN*	**416476**!
9656	*C-R*	**471648**
96569	*CHRYS*	7300S
965744	*CHRYS*	**471689**!
9661	*C-R*	**471648**
9661LPD	*JN-MN*	**416865**!
9661LUP	*JN-MN*	**416865**!
966238M1	*MASSE*	8020S
9662LPD	*JN-MN*	**416339**
9662LPD	*JN-MN*	455031!
9662LUP	*JN-MN*	**416339**
9662LUP	*JN-MN*	455031!
9663	*C-R*	8059S
9663LPD	*JN-MN*	**417509***
9663LUP	*JN-MN*	**417509**
9664	*C-R*	8059S
966446R91	*IH*	**415458**
9664LPD	*JN-MN*	**416154**!
9664LUP	*JN-MN*	**416154**!
9666	*C-R*	**471688***
9667	*C-R*	**471688**
96688	*CHRYS*	**471271**!
9670	*C-R*	**471688***
96713	*WHITE*	**473228**
96719	*WHITE*	5MR71
967228R91	*IH*	**415995**!
96733	*CHRYS*	**470380**!
9674	*C-R*	**471688**
9675	*C-R*	**471688**
9675S	*SPG*	332062
967610R91	*IH*	**415449**
96783	*WHITE*	**471689**!
9679	*C-R*	**471689**
9680	*C-R*	**450040**
9681	*C-R*	**450040***
968190-R1	*IH*	730003
968191-R92	*IH*	HU036A
9682	*C-R*	**482309**
96823R91	*IH*	**470898**
9683	*C-R*	**450040**
9686LPD	*JN-MN*	**412920**!
9686LUP	*JN-MN*	**412920**!
9687	*C-R*	**451082**
9688	*C-R*	**482310**
9688LPD	*JN-MN*	**470625**!
9688LUP	*JN-MN*	**470625**!
968908R91	*IH*	**415984**!
968939R91	*IH*	**473229**
9690	*C-R*	**450339**
969022	*TRW*	5690
9694SS	*JN-MN*	**473238**!
9695	*C-R*	222510*
9698	*CHAMP*	**471689**!
9698	*DOMIN*	**471689**!
96BM-6700-A6B	*FORD*	712141
96BM-6701-A6B	*FORD*	712142
96GX212	*JOY*	**415034**!
96X7033	*GARLK*	**470954**!
97-294413	*BUC-E*	**415001**!
97-463-39	*DANA*	**415035**
9700	*C-R*	712018
97000	*MCCOR*	**416476**!
97001	*CHRYS*	410059
97001	*CHRYS*	**470380**!
97001	*MCCOR*	**416229**
97002	*MCCOR*	**416229**
97003	*MCCOR*	**416666**
97006	*MCCOR*	5M466
97007	*MCCOR*	**476470**
97007S	*MCCOR*	**476470**
97008	*MCCOR*	**415072**
97009	*CHRYS*	410059
97009	*CHRYS*	**470380**!
97009	*MCCOR*	**416107**!
97009	*MCCOR*	455073
9701	*C-R*	222535
97010	*MCCOR*	**416239**!
97011	*MCCOR*	**417556**
97012	*MCCOR*	**417563**
97013	*MCCOR*	**417298**
97014	*MCCOR*	**415116**
97015	*MCCOR*	**415551**
97016	*MCCOR*	**455297**
97017	*MCCOR*	55316=
97017350	*GMC*	1990
97019	*MCCOR*	455375=
97020	*MCCOR*	**415447**
97023976	*GMC*	710081
97023977	*GMC*	710080
97024	*MCCOR*	**415072**
97025	*MCCOR*	**457874**
97025798	*GMC*	710194
97026	*MCCOR*	**417600**
97027	*MCCOR*	**417601**
97028	*MCCOR*	**415090**
97029	*MCCOR*	**415124**
97029260	*GMC*	3543
9702C	*DIA*	**473203**
9703	*C-R*	25X40X7V
97031	*MCCOR*	**417020**
97031954	*GMC*	710114
97035	*MCCOR*	6245S=
97036	*MCCOR*	**416394**
97037	*MCCOR*	**415938**
97038	*MCCOR*	55532=
97039	*MCCOR*	**455584**
97040	*MCCOR*	**417555**!
97041	*MCCOR*	**416239**!
97042	*MCCOR*	**417602**!
97045	*MCCOR*	**417602**!
97048	*MCCOR*	6649
97049	*MCCOR*	**455583N**!
9705	*C-R*	222510
9705	*C-R*	25X35X7!
97050	*MCCOR*	**455121**
97051	*MCCOR*	**417596**
97051954	*GMC*	710114
97053	*MCCOR*	**455117**
97054	*MCCOR*	**417604**
97055	*MCCOR*	415871
97057	*MCCOR*	**416364**!
97058	*MCCOR*	**415077**
97059	*MCCOR*	**417549**!
9705LPD	*JN-MN*	**417223**
9705LUP	*JN-MN*	**417223**
9706	*C-R*	25X35X7V!
9706	*C-R*	712007
97060	*MCCOR*	**455480**!
97061	*MCCOR*	55692=
97062	*MCCOR*	6897=
97063	*MCCOR*	7006S
97064	*MCCOR*	**415867**
97065	*MCCOR*	**455583N**!
97066	*MCCOR*	**417597**
97067	*MCCOR*	8996S=
97069	*HYST*	**413246**
97072405	*GMC*	3543
9707LPD	*JN-MN*	**455356**
9707LUP	*JN-MN*	**455356**
9708	*C-R*	222510
9708	*C-R*	25X35X7!
9709	*C-R*	222510

! Industrial Size/Type * Minor Width Difference

= The U.S. customer service number is 877-4-TIMKEN. The Canadian customer service numbers are 800-565-4927 (English) and 800-565-0438 (French-Canadian).

Mfr. No.	Name	Zero Duplication or Recommended Industrial
9709	C-R	712007
9710	C-R	25X36X7
971086R91	IH	8635S
9710LPD	JN-MN	**470334**!*
9710LUP	JN-MN	**470334**!
9711	C-R	25X35X7V
9711H	MINNM	**470712**
9712	C-R	25X42X10!
9714	C-R	25X37X7*
9714LPD	JN-MN	**350974**!
9715	C-R	320603
9715LPD	JN-MN	**415259**!
9715LUP	JN-MN	**415259**!
9716	C-R	25X37X5V
9717	C-R	712007
9717	EATON	350942
9717	FULLE	350942
9718	C-R	25X37X7!
9718	C-R	320603
9719A	C-R	450415
9720	C-R	222535
9720	C-R	25X38X7!
9721	C-R	25X38X7V
9722A	C-R	**476470**
9722H	MINNM	**455189**
9723	C-R	222535
972401R91	IH	370023A
972408R91	IH	**412473**!
972424R91	IH	**417487**!
972424R91	IH	**417487**
9725	C-R	222540
9725	C-R	25X40X7!
9727	C-R	222540
9727	C-R	25X40X7V!
9728	C-R	25X42X6*
9728	C-R	25X42X8!
97281	HYST	**450593**!
9729	C-R	222556
9729	C-R	25X42X7V!
9729LPD	JN-MN	**415379**!
9729LPD	JN-MN	**415379**
9729LUP	JN-MN	**415379**
9729LUP	JN-MN	**415379**!
972E-13	CLARK	**472924**!
972E-14	CLARK	**415458**!
972E-16	CLARK	**470530**!
972E-19	CLARK	40627S=
972E-21	CLARK	**473464**!
972E-21	CLARK	**473464**
972E-22	CLARK	**472439**
972E-23	CLARK	**473228**
972E-24	CLARK	45187S
972E-27	CLARK	**471766**!
972E-33	CLARK	**473228**
972E-6	CLARK	**415458**!
972E15	CLARK	**473232**!
972E17	CLARK	450129
972E17	CLARK	**472826**!
972E18	CLARK	**470682**
972E31	CLARK	**473234**
9730	C-R	25X42X10!*
9730	C-R	25X42X8!
9731	C-R	25X45X8
9732	C-R	222540
9732	C-R	25X40X7!
9732LPD	JN-MN	**417316**!
9732LUP	JN-MN	**417316**!
9733	C-R	25X40X7*
9733	C-R	710316
9733LPD	JN-MN	**471276**
9733LUP	JN-MN	**471276**
9734	C-R	25X45X8*
9735	C-R	25X45X8
9736	C-R	25X42X10
9736LPD	JN-MN	**471424**!
9736LUP	JN-MN	**471424**!
97370	BENDI	**471255**!
97371	BENDI	**471442**!
9738	C-R	25X42X6
9739	C-R	25X45X8
9740	C-R	25X46X7
9742	C-R	25X42X8
97423	CHRYS	**481181**!
9742A	C-R	**415035**!
9742A	C-R	**415035**
9743LPD	JN-MN	**471231**!
9743LUP	JN-MN	**471231**!
97448	CHRYS	9376
97449	CHRYS	9487
9744LPD	JN-MN	**451583**!
9744LUP	JN-MN	**451583**!
9745	C-R	25X47X7
974526R91	IH	5471
97461R91	IH	**417316**!
974631	SPICE	**472015**!
974632	SPICE	**472015**
9746326	SPICE	**415995**!
9746332	SPICE	**472015**
9746333	SPICE	3893V!
9746333	SPICE	**415379**!
9747	C-R	222560
9747	C-R	25X47X7!
97474	CHRYS	**472258**!
97474	NPG	**472258**!
9748	C-R	222560
9748	C-R	25X47X7!
9749LPD	JN-MN	55692=
9749LUP	JN-MN	55692=
9750	C-R	25X48X8
97501	MCCOR	5401
97503	MCCOR	5403
97505	MCCOR	5405
97506	MCCOR	5406
97508	MCCOR	5408
9750A	C-R	**471192**
9750LPD	JN-MN	**417480**!
9750LUP	JN-MN	**417480**!
9751	C-R	25X48X8
97510	MCCOR	5410
97513	MCCOR	5452
975130	C-R	55239=
97514	MCCOR	5453
97515	MCCOR	5458
97517	MCCOR	370002A
97518	MCCOR	**417506**
9751LPD	JN-MN	**471271**!
9751LUP	JN-MN	**471271**!
9752	C-R	222558
97520	MCCOR	370019A
97521	MCCOR	370005A
97523	MCCOR	5471
97524	MCCOR	5473
97525	MCCOR	5460
97529	MCCOR	**417505**
9752LPD	JN-MN	**415991**
9752LPD	JN-MN	455146!
9752LUP	JN-MN	**415991**
9752LUP	JN-MN	455146!
97531	MCCOR	5462
97533	MCCOR	5481
97537	MCCOR	5487
97538	MCCOR	5589
97539	MCCOR	5494
9754	C-R	25X50X10V
97540	C-R	55239=
97540	MCCOR	5495
97541	MCCOR	5472=
97542	MCCOR	5499=
97543	C-R	55078S
97544	MCCOR	370003A
97545	C-R	55078S*
97546	MCCOR	**417506**
97547	C-R	55223=
97547	MCCOR	5320=
9755	C-R	25X50X10*
9755	C-R	25X50X8!
97550	C-R	55223=
9755A	C-R	**417316**!
9756	C-R	25X50X10
9758	C-R	25X52X7
9760	C-R	25X52X7!
9761	C-R	25X52X7V
9762	C-R	25X52X10
9762LPD	JN-MN	455178=
9762LUP	JN-MN	455178=
9763	C-R	25X52X7
9764	C-R	25X52X8
9764A	C-R	**416125**!
9764LPD	JN-MN	**417211**!*
9764LUP	JN-MN	**417211**!
9765	C-R	25X54X8
9766	C-R	25X50X10
9767	C-R	25X45X8
9770	C-R	25X55X8
9772056	GMC	7412S
9772826	GMC	5073
9772831	GMC	5095
97737HA	IH	5MR1008
9775	C-R	25X56X8
9775113	GMC	8594S
9775114	GMC	8594S
9775115	GMC	8594S
9776620	GMC	410059
9776620	GMC	**470380**!
9776624	GMC	7412S
9778371	GMC	8940S
9778372	GMC	8940S
9780	C-R	25X58X8
978016	HYST	**473459**
9781063	GMC	**471413**!
9782153	GMC	7399S!
9782209	GMC	**480844**
9782288	GMC	7399S!
9784286	GMC	2043
9784508	GMC	2043
9785	C-R	25X60X8
9787	C-R	25X62X7
97871	CHRYS	**410308**!
97871	CHRYS	473468
9787344	GMC	332062
9788739	GMC	8705S
9789	C-R	25X62X7
9789LPD	JN-MN	**476838**!
9789LUP	JN-MN	**476838**!
9790	C-R	25X62X10
9790LPD	JN-MN	**471271**!
9790LUP	JN-MN	**471271**!
9791	C-R	25X62X7V
9793675	GMC	2043
9793685	GMC	2043
9794LPD	JN-MN	455024
9794LUP	JN-MN	455024
9795	C-R	222580
9795	C-R	25X62X10!
97955	HYST	**472287**!
9795641	GMC	292594
9797LPD	JN-MN	**417269**!
9797LUP	JN-MN	**417269**!
9799LPD	JN-MN	**471504**!
9799LUP	JN-MN	**471504**!
97GK179	JOY	**417485**
97GK29	JOY	**415645**!
97GK29	JOY	455104
97GK32	JOY	**473313**
97GK33	JOY	**415007**
97GK4	JOY	**416666**
97GT-7052AA	FORD	2655
97GX1	JOY	**417563**
97GX10	JOY	**415058**
97GX100	JOY	**471736**
97GX101	JOY	**471750**!
97GX102	JOY	**471192**
97GX103	JOY	**473214**
97GX104	JOY	**473214**
97GX105	JOY	470950!
97GX105	JOY	6241S
97GX106	JOY	**471820**
97GX107	JOY	**470625**!
97GX108	JOY	**470625**!
97GX109	JOY	470059
97GX109	JOY	**470380**!
97GX11	JOY	**417487**
97GX110	JOY	470059
97GX110	JOY	**470380**!
97GX111	JOY	**471821**!
97GX112	JOY	**473229**
97GX113	JOY	**473229**
97GX114	JOY	**470682**
97GX115	JOY	**473444**
97GX116	JOY	**473236**!
97GX117	JOY	**474265**
97GX118	JOY	**450068**
97GX119	JOY	**471504**!
97GX12	JOY	**456105**
97GX120	JOY	**472179**
97GX121	JOY	**472179**
97GX122	JOY	**470334**!
97GX123	JOY	**473458**!
97GX124	JOY	**473239**
97GX125	JOY	**471868**
97GX126	JOY	**472439**
97GX127	JOY	**472572**!
97GX128	JOY	**455117**
97GX13	JOY	**415035**
97GX13	JOY	**415035**!
97GX130	JOY	**473462**
97GX131	JOY	**472394**
97GX132	JOY	**472492**!
97GX133	JOY	**472492**!
97GX134	JOY	**472397**!
97GX135	JOY	**473242**
97GX136	JOY	**473463**
97GX137	JOY	**416738**!
97GX137	JOY	450096
97GX138	JOY	**450307**
97GX139	JOY	450532
97GX14	JOY	**330385**!
97GX140	JOY	**473467**
97GX142	JOY	**472016**
97GX143	JOY	**413469**!
97GX144	JOY	**472015**!
97GX145	JOY	**473243**
97GX146	JOY	**470898**
97GX147	JOY	**472015**!
97GX148	JOY	**473245**!
97GX149	JOY	**471272**!
97GX15	JOY	**455008**
97GX150	JOY	**471138**!

! Industrial Size/Type * Minor Width Difference

= The U.S. customer service number is 877-4-TIMKEN. The Canadian customer service numbers are 800-565-4927 (English) and 800-565-0438 (French-Canadian).

Mfr. No.	Name	Zero Duplication or Recommended Industrial
97GX151	JOY	450033
97GX152	JOY	450033
97GX153	JOY	**411253**!
97GX154	JOY	**412920**!
97GX155	JOY	455136
97GX156	JOY	**411376**!
97GX157	JOY	**410737**!
97GX158	JOY	**410694**!
97GX159	JOY	**411394**!
97GX16	JOY	**471766**!
97GX163	JOY	**413247**!
97GX164	JOY	**412119**!
97GX165	JOY	**416271**!
97GX166	JOY	**417073**
97GX167	JOY	**411245**!
97GX17	JOY	**415074**
97GX171	JOY	**470605**!
97GX172	JOY	**470605**!
97GX173	JOY	**415449**!
97GX174	JOY	**455079**!
97GX175	JOY	**415082**
97GX177	JOY	**415988**
97GX178	JOY	**415302**
97GX179	JOY	**417485**
97GX18	JOY	**416339**
97GX18	JOY	455031!
97GX180	JOY	**455005**
97GX181	JOY	**417344**!
97GX182	JOY	**417158**!
97GX183	JOY	**417344**!
97GX185	JOY	**416654**!
97GX186	JOY	**417349**
97GX187	JOY	**417350**!
97GX188	JOY	**417350**!
97GX189	JOY	**417351**!
97GX19	JOY	415064
97GX190	JOY	**417487**
97GX191	JOY	**417488**!
97GX192	JOY	**415995**!
97GX193	JOY	55155=
97GX195	JOY	**417621**!
97GX196	JOY	**415021**
97GX197	JOY	417490
97GX198	JOY	417490
97GX199	JOY	**455336**
97GX2	JOY	**417546**!
97GX20	JOY	**415045**!
97GX200	JOY	**455336**
97GX201	JOY	**418028**
97GX201	JOY	455137!
97GX202	JOY	**418028**
97GX202	JOY	455137!
97GX203	JOY	**476470**
97GX205	JOY	**417491**
97GX207	JOY	**412473**!
97GX208	JOY	**415437**
97GX21	JOY	**416892**!
97GX211	JOY	**417211**!
97GX213	JOY	**417356**!
97GX213	JOY	455188
97GX214	JOY	**415035**
97GX214	JOY	**415035**!
97GX215	JOY	**417511**
97GX216	JOY	**417511**
97GX218	JOY	417513
97GX219	JOY	**472157**!
97GX219	JOY	**472157**
97GX22	JOY	455024
97GX220	JOY	**472157**!
97GX220	JOY	**472157**
97GX221	JOY	**416891**!
97GX222	JOY	**416137**
97GX226	JOY	**415196**!
97GX227	JOY	**416888**!
97GX228	JOY	**417532**
97GX229	JOY	**416154**!
97GX23	JOY	**412119**!
97GX230	JOY	**417532**
97GX231	JOY	**415371**
97GX232	JOY	417535
97GX233	JOY	**415138**!
97GX235	JOY	**415725**!
97GX236	JOY	**417278**
97GX237	JOY	**417542**
97GX24	JOY	**471765**!
97GX241	JOY	**417262**!
97GX246	JOY	**415072**
97GX249	JOY	**455480**!
97GX25	JOY	**417316**!
97GX250	JOY	**416239**!
97GX26	JOY	**476470**
97GX260	JOY	**411394**!
97GX27	JOY	**416137**
97GX28	JOY	**415036**
97GX3	JOY	**416107**!
97GX3	JOY	455073
97GX30	JOY	**416921**!
97GX31	JOY	**455019**!
97GX34	JOY	**415025**
97GX35	JOY	**473214**
97GX36	JOY	**415988**
97GX37	JOY	**471138**!
97GX38	JOY	50199S!
97GX38	JOY	6863S!
97GX39	JOY	**416664**!
97GX40	JOY	**472029**
97GX41	JOY	**417507**!
97GX41	JOY	**417507**
97GX43	JOY	**418028**
97GX43	JOY	455137!
97GX44	JOY	**473228**
97GX45	JOY	**471532**
97GX46	JOY	**473238**!
97GX47	JOY	**415960**
97GX48	JOY	**472924**!
97GX49	JOY	**417356**!
97GX49	JOY	455188
97GX5	JOY	**472185**!
97GX50	JOY	**473463**
97GX51	JOY	**472636**!
97GX52	JOY	**415995**!
97GX53	JOY	**471646**!
97GX54	JOY	**471472**!
97GX55	JOY	**472636**!
97GX57	JOY	**416153**!
97GX58	JOY	**470530**!
97GX6	JOY	**450084**!
97GX63	JOY	**455655**!
97GX7	JOY	**415449**!
97GX70	JOY	**470954**!
97GX71	JOY	**412920**!
97GX72	JOY	**471551**!
97GX75	JOY	**330385**!
97GX76	JOY	**473236**!
97GX77	JOY	**472810**!
97GX78	JOY	**471442**!
97GX79	JOY	**471532**
97GX8	JOY	**413469**!
97GX81	JOY	**471529**
97GX82	JOY	50026
97GX83	JOY	**470590**
97GX84	JOY	**471267**!
97GX85	JOY	**470590**
97GX86	JOY	**471571**
97GX88	JOY	**471648**
97GX89	JOY	**471224**!
97GX9	JOY	**415027**
97GX9	JOY	**415027**!
97GX90	JOY	**471649**!
97GX91	JOY	**471224**!
97GX92	JOY	481650
97GX93	JOY	**471835**!
97GX94	JOY	**471763**
97GX95	JOY	**476838**!
97GX96	JOY	**470712**!
97GX97	JOY	**471692**!
97GX98	JOY	**471692**!
97GX99	JOY	**471785**!
97KX1	JOY	**417563**
97KX10	JOY	**415058**
97KX100	JOY	**471736**
97KX101	JOY	**471750**!
97KX102	JOY	**471192**
97KX103	JOY	**473214**
97KX104	JOY	**473214**
97KX105	JOY	470950!
97KX105	JOY	6241S
97KX106	JOY	**471820**
97KX107	JOY	**470625**!
97KX108	JOY	**470625**!
97KX109	JOY	470059
97KX109	JOY	**470380**!
97KX11	JOY	**417487**
97KX110	JOY	470059
97KX110	JOY	**470380**!
97KX111	JOY	**471821**!
97KX112	JOY	**473229**
97KX113	JOY	**473229**
97KX114	JOY	**470682**
97KX115	JOY	**473444**
97KX116	JOY	**473236**!
97KX117	JOY	**474265**
97KX118	JOY	**450068**
97KX119	JOY	**471504**!
97KX12	JOY	**456105**
97KX120	JOY	**472179**
97KX121	JOY	**472179**
97KX122	JOY	**470334**!
97KX123	JOY	**473458**!
97KX124	JOY	**473239**
97KX125	JOY	**471868**
97KX126	JOY	**472439**
97KX127	JOY	**472572**!
97KX128	JOY	**472572**!
97KX13	JOY	**415035**
97KX13	JOY	**415035**!
97KX130	JOY	**473462**
97KX131	JOY	**472394**
97KX132	JOY	**472492**!
97KX133	JOY	**472492**!
97KX134	JOY	**472397**!
97KX135	JOY	**473242**
97KX136	JOY	**473463**
97KX137	JOY	**416738**!
97KX137	JOY	450096
97KX138	JOY	**450307**
97KX139	JOY	450532
97KX140	JOY	**473467**
97KX142	JOY	**472016**
97KX143	JOY	**413469**!
97KX144	JOY	**472015**!
97KX145	JOY	**473243**
97KX146	JOY	**470898**
97KX147	JOY	**472015**!
97KX148	JOY	**473245**!
97KX149	JOY	**471272**!
97KX15	JOY	**455008**
97KX150	JOY	**471138**!
97KX153	JOY	**411253**!
97KX154	JOY	**412920**!
97KX155	JOY	455136
97KX156	JOY	**411376**!
97KX157	JOY	**410737**!
97KX158	JOY	**410694**!
97KX159	JOY	**411394**!
97KX16	JOY	**471766**!
97KX163	JOY	**413247**!
97KX164	JOY	**412119**!
97KX165	JOY	**416271**!
97KX166	JOY	**417073**
97KX167	JOY	**411245**!
97KX17	JOY	**415074**
97KX170	JOY	**410496**!
97KX171	JOY	**470605**!
97KX172	JOY	**470605**!
97KX174	JOY	**455079**!
97KX175	JOY	**415082**
97KX177	JOY	**415988**
97KX178	JOY	**415302**
97KX179	JOY	**417485**
97KX180	JOY	**455005**
97KX181	JOY	**417344**!
97KX182	JOY	**417158**!
97KX183	JOY	**417344**!
97KX185	JOY	**416654**!
97KX186	JOY	**417349**
97KX187	JOY	**417350**!
97KX188	JOY	**417350**!
97KX189	JOY	**417351**!
97KX19	JOY	415064
97KX190	JOY	**417487**
97KX191	JOY	**417488**!
97KX192	JOY	**415995**!
97KX193	JOY	55155=
97KX194	JOY	**417172**
97KX195	JOY	**417621**!
97KX196	JOY	**415021**
97KX197	JOY	417490
97KX198	JOY	417490
97KX199	JOY	**455336**
97KX2	JOY	**417546**!
97KX20	JOY	**415045**!
97KX200	JOY	**455336**
97KX201	JOY	**418028**
97KX201	JOY	455137!
97KX202	JOY	**418028**
97KX202	JOY	455137!
97KX203	JOY	**476470**
97KX205	JOY	**417491**
97KX207	JOY	**412473**!
97KX208	JOY	**415437**
97KX21	JOY	**416892**!
97KX211	JOY	**417211**!
97KX212	JOY	**415034**!
97KX213	JOY	**417356**!
97KX213	JOY	455188
97KX214	JOY	**415035**
97KX214	JOY	**415035**!
97KX215	JOY	**417511**
97KX216	JOY	**417511**
97KX218	JOY	417513
97KX219	JOY	**472157**
97KX219	JOY	**472157**!
97KX22	JOY	455024
97KX220	JOY	**472157**!
97KX220	JOY	**472157**
97KX221	JOY	**416891**!
97KX222	JOY	**416137**

! Industrial Size/Type

= The U.S. customer service number is 877-4-TIMKEN. The Canadian customer service numbers are 800-565-4927 (English) and 800-565-0438 (French-Canadian).

Mfr. No.	Name	Zero Duplication or Recommended Industrial
97KX226	JOY	415196!
97KX227	JOY	416888!
97KX228	JOY	417532
97KX229	JOY	416154!
97KX23	JOY	412119!
97KX230	JOY	417532
97KX231	JOY	415371
97KX232	JOY	417535
97KX233	JOY	415138!
97KX235	JOY	415725!
97KX236	JOY	417278
97KX237	JOY	417542
97KX24	JOY	471765!
97KX241	JOY	417262!
97KX246	JOY	415072
97KX249	JOY	455480!
97KX25	JOY	417316!
97KX250	JOY	416239!
97KX26	JOY	476470
97KX27	JOY	416137
97KX28	JOY	415036
97KX29	JOY	415645!
97KX29	JOY	455104
97KX3	JOY	416107!
97KX3	JOY	455073
97KX30	JOY	416921!
97KX31	JOY	455019!
97KX32	JOY	473313
97KX33	JOY	415007
97KX34	JOY	415025
97KX35	JOY	473214
97KX36	JOY	415988
97KX37	JOY	471138!
97KX39	JOY	416664!
97KX4	JOY	416666
97KX40	JOY	472029
97KX41	JOY	417507
97KX41	JOY	417507!
97KX43	JOY	418028
97KX43	JOY	455137!
97KX44	JOY	473228
97KX45	JOY	471532
97KX46	JOY	473238!
97KX47	JOY	415960
97KX48	JOY	472924!
97KX49	JOY	417356!
97KX49	JOY	455188
97KX5	JOY	472185!
97KX50	JOY	473463
97KX51	JOY	472636!
97KX52	JOY	415995!
97KX53	JOY	471646!
97KX55	JOY	472636!
97KX57	JOY	416153!
97KX58	JOY	470530!
97KX6	JOY	450084!
97KX7	JOY	415449!
97KX70	JOY	470954!
97KX71	JOY	412920!
97KX75	JOY	330385!
97KX76	JOY	473236!
97KX77	JOY	472810!
97KX78	JOY	471442!
97KX79	JOY	471532
97KX8	JOY	413469!
97KX81	JOY	471529
97KX82	JOY	50026
97KX83	JOY	470590
97KX84	JOY	471267!
97KX85	JOY	470590
97KX86	JOY	471571
97KX88	JOY	471648
97KX89	JOY	471224!
97KX9	JOY	415027!
97KX9	JOY	415027
97KX90	JOY	471649!
97KX91	JOY	471224!
97KX92	JOY	481650
97KX93	JOY	471835!
97KX94	JOY	471763
97KX95	JOY	476838!
97KX96	JOY	470712!
97KX97	JOY	471692!
97KX98	JOY	471692!
97KX99	JOY	471785!
97LX127	JOY	416891!
97LX133	JOY	415138!
97LX276	JOY	476470
97LX29	JOY	417344!
97LX31	JOY	471750!
97LX32	JOY	471413
97LX40	JOY	472029
97LX52	JOY	415995!
97LX53	JOY	415991
97LX53	JOY	455146!
97LX66	JOY	472492!
97LX68	JOY	471271!
97LX81	JOY	472924!
97MX1	JOY	471466!
97MX10	JOY	450398
97MX10	JOY	471267!
97MX102	JOY	415960
97MX106	JOY	415995!
97MX107	JOY	55155=
97MX109	JOY	417621!
97MX11	JOY	471570!
97MX112	JOY	476470
97MX113	JOY	418028
97MX113	JOY	455137!
97MX116	JOY	415991
97MX116	JOY	455146!
97MX117	JOY	416339
97MX117	JOY	455031!
97MX118	JOY	416339
97MX118	JOY	455031!
97MX119	JOY	417211!
97MX12	JOY	471571
97MX120	JOY	416345!
97MX120	JOY	455033
97MX121	JOY	415034!
97MX124	JOY	415036
97MX125	JOY	415295
97MX127	JOY	416891!
97MX128	JOY	472157!
97MX128	JOY	472157
97MX129	JOY	416888!
97MX13	JOY	450039
97MX130	JOY	416154!
97MX132	JOY	416158
97MX133	JOY	415138!
97MX134	JOY	415066
97MX135	JOY	416167!
97MX136	JOY	416167!
97MX137	JOY	416865!
97MX138	JOY	416865!
97MX139	JOY	455290
97MX14	JOY	471224!
97MX141	JOY	417551
97MX143	JOY	417254
97MX144	JOY	480630!
97MX145	JOY	417555!
97MX147	JOY	417780
97MX149	JOY	415072
97MX15	JOY	471649!
97MX150	JOY	455583N!
97MX152	JOY	55333=
97MX153	JOY	417596
97MX156	JOY	416364!
97MX157	JOY	415116
97MX159	JOY	417602!
97MX160	JOY	417604
97MX161	JOY	415128
97MX162	JOY	55301S
97MX163	JOY	415090
97MX164	JOY	415001!
97MX165	JOY	415645!
97MX165	JOY	455104
97MX17	JOY	450342
97MX171	JOY	455330!
97MX177	JOY	416891!
97MX179	JOY	472636!
97MX18	JOY	471762!
97MX187	JOY	416364!
97MX19	JOY	473420
97MX197	JOY	415138!
97MX2	JOY	471466!
97MX20	JOY	471747!
97MX21	JOY	471763
97MX22	JOY	473234
97MX25	JOY	471765!
97MX26	JOY	471413!
97MX27	JOY	471766!
97MX28	JOY	473213!
97MX29	JOY	417344!
97MX3	JOY	471466!
97MX31	JOY	471750!
97MX32	JOY	471413!
97MX34	JOY	417316!
97MX38	JOY	481163!
97MX39	JOY	471192
97MX40	JOY	472029
97MX42	JOY	473214
97MX43	JOY	473215!
97MX44	JOY	473226
97MX45	JOY	473225!
97MX47	JOY	470625!
97MX48	JOY	470059
97MX48	JOY	470380!
97MX49	JOY	470059
97MX49	JOY	470380!
97MX50	JOY	473229
97MX51	JOY	472636!
97MX52	JOY	415995!
97MX53	JOY	415991
97MX53	JOY	455146!
97MX56	JOY	470682
97MX57	JOY	473231
97MX58	JOY	473010
97MX59	JOY	473010
97MX60	JOY	473445
97MX61	JOY	473234
97MX62	JOY	474265
97MX63	JOY	472164!
97MX64	JOY	472179
97MX66	JOY	472492!
97MX68	JOY	471271!
97MX69	JOY	415449!
97MX7	JOY	471231!
97MX70	JOY	471141!
97MX73	JOY	473449
97MX76	JOY	472439
97MX77	JOY	472572!
97MX78	JOY	472319
97MX8	JOY	474253
97MX80	JOY	472394
97MX81	JOY	472924!
97MX82	JOY	472397!
97MX83	JOY	450311
97MX84	JOY	450311
97MX85	JOY	470898
97MX86	JOY	470898
97MX87	JOY	472234
97MX89	JOY	471272!
97MX90	JOY	472636!
97MX93	JOY	413478
97MX94	JOY	413478
97MX95	JOY	411245!
97MX96	JOY	416288!
97MX98	JOY	417343!
97MX99	JOY	455151
97P3	WHITE	455151
97VX1	JOY	417563
97VX10	JOY	415058
97VX100	JOY	472185!
97VX101	JOY	472179
97VX102	JOY	450089
97VX103	JOY	473450
97VX104	JOY	473458!
97VX105	JOY	473239
97VX106	JOY	471868
97VX107	JOY	472439
97VX108	JOY	472394
97VX109	JOY	472397!
97VX11	JOY	417487
97VX110	JOY	473242
97VX111	JOY	410102
97VX112	JOY	416738!
97VX112	JOY	450096
97VX113	JOY	450307
97VX114	JOY	473467
97VX115	JOY	413469!
97VX116	JOY	472016
97VX117	JOY	472015!
97VX118	JOY	473243
97VX119	JOY	473245!
97VX12	JOY	456105
97VX120	JOY	412920!
97VX121	JOY	411376!
97VX122	JOY	410737!
97VX123	JOY	410694!
97VX124	JOY	411394!
97VX125	JOY	417073
97VX126	JOY	411245!
97VX127	JOY	415449!
97VX128	JOY	415302
97VX129	JOY	415458!
97VX13	JOY	415035
97VX13	JOY	415035!
97VX130	JOY	417485
97VX131	JOY	455005
97VX132	JOY	417344!
97VX133	JOY	417134
97VX134	JOY	417486
97VX135	JOY	416654!
97VX137	JOY	55155=
97VX138	JOY	417621!
97VX139	JOY	415021
97VX140	JOY	455336
97VX141	JOY	415023
97VX142	JOY	415937!
97VX143	JOY	455032!
97VX144	JOY	415034!
97VX145	JOY	417513
97VX146	JOY	472157
97VX146	JOY	472157!
97VX147	JOY	416891!
97VX148	JOY	416153!
97VX149	JOY	415371

! Industrial Size/Type
= The U.S. customer service number is 877-4-TIMKEN. The Canadian customer service numbers are 800-565-4927 (English) and 800-565-0438 (French-Canadian).

Mfr. No.	Name	Zero Duplication or Recommended Industrial
97VX15	JOY	455008
97VX150	JOY	415138!
97VX151	JOY	457874
97VX152	JOY	416239!
97VX153	JOY	417507
97VX153	JOY	417507!
97VX156	JOY	472560N!
97VX159	JOY	471472!
97VX16	JOY	471766!
97VX17	JOY	457874
97VX18	JOY	416339
97VX18	JOY	455031!
97VX19	JOY	415064
97VX2	JOY	417546!
97VX20	JOY	415045!
97VX21	JOY	416892!
97VX22	JOY	455024
97VX23	JOY	412119!
97VX24	JOY	471765!
97VX25	JOY	417316!
97VX26	JOY	476470
97VX27	JOY	416137
97VX28	JOY	415036
97VX29	JOY	415645!
97VX29	JOY	455104
97VX3	JOY	416107!
97VX3	JOY	455073
97VX30	JOY	416921!
97VX31	JOY	455019!
97VX32	JOY	473313
97VX33	JOY	415007
97VX34	JOY	415025
97VX35	JOY	473214
97VX36	JOY	415988
97VX4	JOY	416666
97VX40	JOY	410496!
97VX41	JOY	415041
97VX42	JOY	415379!
97VX42	JOY	415379
97VX43	JOY	418028
97VX43	JOY	455137!
97VX44	JOY	473228
97VX45	JOY	473225!
97VX46	JOY	473238
97VX47	JOY	415960
97VX48	JOY	472924!
97VX49	JOY	417356!
97VX49	JOY	455188
97VX5	JOY	472185!
97VX50	JOY	473463
97VX52	JOY	415995!
97VX53	JOY	471646!
97VX54	JOY	473232
97VX55	JOY	472636!
97VX57	JOY	416153!
97VX58	JOY	470530!
97VX59	JOY	473464!
97VX59	JOY	473464
97VX6	JOY	450084!
97VX60	JOY	410190
97VX61	JOY	471571
97VX62	JOY	470712!
97VX63	JOY	473016!
97VX64	JOY	470059
97VX64	JOY	470380!
97VX65	JOY	471820
97VX66	JOY	471821!
97VX67	JOY	473010
97VX68	JOY	473446
97VX69	JOY	50075=
97VX7	JOY	415001!
97VX70	JOY	472144!

Mfr. No.	Name	Zero Duplication or Recommended Industrial
97VX71	JOY	473462
97VX72	JOY	411253!
97VX73	JOY	471224!
97VX74	JOY	416444
97VX75	JOY	416271!
97VX76	JOY	417171!
97VX77	JOY	455022
97VX78	JOY	455026
97VX8	JOY	413469!
97VX80	JOY	481568!
97VX81	JOY	472924!
97VX82	JOY	50026
97VX85	JOY	470590
97VX86	JOY	471648
97VX87	JOY	450044
97VX88	JOY	471763
97VX89	JOY	476838!
97VX9	JOY	415027
97VX9	JOY	415027!
97VX90	JOY	471785!
97VX91	JOY	470950!
97VX91	JOY	6241S
97VX92	JOY	470625!
97VX93	JOY	471821!
97VX94	JOY	473229
97VX95	JOY	470682
97VX96	JOY	473444
97VX97	JOY	473236!
97VX98	JOY	474265
97VX99	JOY	450068
97X	JOY	471684!
97X1	JOY	417563
97X10	JOY	415058
97X100	JOY	417344!
97X101	JOY	416654!
97X102	JOY	417497
97X103	JOY	417492
97X104	JOY	415995!
97X105	JOY	473245!
97X106	JOY	470059
97X106	JOY	470380!
97X107	JOY	470950!
97X107	JOY	6241S
97X108	JOY	480210!
97X11	JOY	417487
97X110	JOY	473225!
97X114	JOY	415196!
97X116	JOY	471472!
97X118	JOY	471549!
97X119	JOY	471532
97X12	JOY	456105
97X120	JOY	481073
97X121	JOY	471553!
97X122	JOY	50026
97X123	JOY	471689!
97X124	JOY	471649!
97X125	JOY	471224!
97X126	JOY	450044
97X127	JOY	471763
97X128	JOY	476838!
97X129	JOY	470712!
97X13	JOY	415035
97X13	JOY	415035!
97X130	JOY	471785!
97X131	JOY	471750!
97X132	JOY	470625!
97X133	JOY	473229
97X134	JOY	470682
97X135	JOY	451469
97X136	JOY	473444
97X137	JOY	473010
97X138	JOY	473446

Mfr. No.	Name	Zero Duplication or Recommended Industrial
97X139	JOY	473236!
97X140	JOY	450068
97X141	JOY	472179
97X142	JOY	470334!
97X143	JOY	450089
97X144	JOY	473450
97X145	JOY	471866!
97X146	JOY	473458!
97X147	JOY	471868
97X148	JOY	472439
97X15	JOY	455008
97X151	JOY	472397!
97X152	JOY	473242
97X153	JOY	416738!
97X153	JOY	450096
97X154	JOY	450307
97X155	JOY	472016
97X156	JOY	413469!
97X157	JOY	410308!
97X158	JOY	411253!
97X159	JOY	411376!
97X16	JOY	471766!
97X160	JOY	410694!
97X161	JOY	411394!
97X162	JOY	416271!
97X163	JOY	417073
97X164	JOY	410496!
97X165	JOY	415302
97X166	JOY	415458!
97X167	JOY	417485
97X168	JOY	455005
97X169	JOY	417134
97X17	JOY	457874
97X170	JOY	455144
97X171	JOY	417486
97X172	JOY	417488!
97X173	JOY	55155=
97X174	JOY	417621!
97X175	JOY	416288!
97X176	JOY	417491
97X177	JOY	415379
97X177	JOY	415379!
97X178	JOY	412473!
97X179	JOY	417191
97X179	JOY	456585
97X18	JOY	416339
97X18	JOY	455031!
97X180	JOY	415025
97X181	JOY	455249!
97X182	JOY	415711
97X183	JOY	415937!
97X184	JOY	415379
97X184	JOY	415379!
97X185	JOY	455032!
97X186	JOY	417366!
97X187	JOY	417211!
97X188	JOY	417210!
97X189	JOY	416345!
97X189	JOY	455033
97X19	JOY	415064
97X190	JOY	415034!
97X191	JOY	417512
97X192	JOY	417513
97X193	JOY	416891!
97X194	JOY	472157!
97X194	JOY	472157
97X195	JOY	416888!
97X196	JOY	415371
97X197	JOY	417247!
97X198	JOY	415138!
97X199	JOY	415066
97X2	JOY	417546!

Mfr. No.	Name	Zero Duplication or Recommended Industrial
97X20	JOY	415045!
97X200	JOY	416167!
97X201	JOY	416865!
97X202	JOY	416865!
97X204	JOY	415072
97X206	JOY	457874
97X207	JOY	417563
97X208	JOY	416229
97X209	JOY	411376!
97X21	JOY	416892!
97X210	JOY	416239!
97X211	JOY	415551
97X212	JOY	455406!
97X213	JOY	417606
97X214	JOY	417020
97X216	JOY	471648
97X22	JOY	455024
97X23	JOY	412119!
97X24	JOY	471765!
97X25	JOY	417316!
97X251	JOY	471272!
97X253	JOY	471354!
97X254	JOY	415995!
97X259	JOY	471570!
97X26	JOY	476470
97X261	JOY	417351!
97X262	JOY	415437!
97X262	JOY	415437
97X263	JOY	415991
97X263	JOY	455146!
97X264	JOY	417196!
97X267	JOY	471684!
97X268	JOY	471567!
97X269	JOY	473213!
97X27	JOY	416137
97X270	JOY	417492
97X271	JOY	416892!
97X272	JOY	415938
97X273	JOY	418028
97X273	JOY	455137!
97X274	JOY	415437
97X275	JOY	471554!
97X276	JOY	470590
97X279	JOY	416664!
97X28	JOY	415036
97X280	JOY	473471
97X281	JOY	417520
97X282	JOY	473228
97X284	JOY	416345!
97X284	JOY	455033
97X287	JOY	417562
97X289	JOY	471413
97X29	JOY	415645!
97X29	JOY	455104
97X290	JOY	415938
97X291	JOY	471466!
97X292	JOY	471224!
97X293	JOY	473474
97X294	JOY	471466!
97X296	JOY	450177
97X297	JOY	471413
97X3	JOY	416107!
97X3	JOY	455073
97X30	JOY	416921!
97X300	JOY	415124
97X301	JOY	416125!
97X302	JOY	417262!
97X303	JOY	472311!
97X307	JOY	415995!
97X308	JOY	471424!
97X31	JOY	455019!
97X315	JOY	471391!

! Industrial Size/Type
= The U.S. customer service number is 877-4-TIMKEN. The Canadian customer service numbers are 800-565-4927 (English) and 800-565-0438 (French-Canadian).

Mfr. No.	Name	Zero Duplication or Recommended Industrial
97X32	*JOY*	**473313**
97X323	*JOY*	**471692**!
97X328	*JOY*	**472560N**!
97X329	*JOY*	**473237**!
97X33	*JOY*	**415007**
97X331	*JOY*	**481792**
97X332	*JOY*	**417480**!
97X34	*JOY*	**415025**
97X346	*JOY*	**417344**!
97X35	*JOY*	**473214**
97X354	*JOY*	**417602**!
97X36	*JOY*	**415988**
97X37	*JOY*	**471138**!
97X39	*JOY*	**416664**!
97X4	*JOY*	**416666**
97X40	*JOY*	**472029**
97X41	*JOY*	**417507**
97X41	*JOY*	**417507**!
97X42	*JOY*	**415379**
97X42	*JOY*	**415379**!
97X43	*JOY*	**418028**
97X43	*JOY*	455137!
97X44	*JOY*	**473228**
97X45	*JOY*	**471466**!
97X46	*JOY*	**473238**
97X47	*JOY*	**415960**!
97X48	*JOY*	**472924**!
97X49	*JOY*	**417356**!
97X49	*JOY*	455188
97X5	*JOY*	**472185**!
97X50	*JOY*	**473461**!
97X51	*JOY*	**472636**!
97X52	*JOY*	**415995**!
97X53	*JOY*	**471646**!
97X54	*JOY*	**473232**
97X55	*JOY*	**472636**!
97X57	*JOY*	**416153**!
97X58	*JOY*	**470530**!
97X59	*JOY*	**417316**!
97X6	*JOY*	**450084**!
97X60	*JOY*	**410737**!
97X61	*JOY*	**471763**
97X63	*JOY*	**417073**
97X64	*JOY*	**415379**
97X64	*JOY*	**415379**!
97X65	*JOY*	**416239**!
97X66	*JOY*	**417247**!
97X7	*JOY*	**415001**!
97X71	*JOY*	**415991**
97X71	*JOY*	455146!
97X72	*JOY*	**410102**
97X73	*JOY*	**471571**
97X75	*JOY*	**473426**
97X76	*JOY*	**473467**
97X77	*JOY*	**413469**!
97X78	*JOY*	**417171**!
97X79	*JOY*	**415021**
97X8	*JOY*	**413469**!
97X80	*JOY*	455022
97X81	*JOY*	**415023**
97X82	*JOY*	**473215**!
97X83	*JOY*	470059
97X83	*JOY*	**470380**!
97X84	*JOY*	**471821**!
97X85	*JOY*	**473235**!
97X86	*JOY*	**472070**
97X87	*JOY*	**474265**
97X88	*JOY*	**473238**
97X89	*JOY*	**472144**!
97X9	*JOY*	**415027**
97X9	*JOY*	**415027**!
97X90	*JOY*	**472144**!

Mfr. No.	Name	Zero Duplication or Recommended Industrial
97X91	*JOY*	**473460**
97X92	*JOY*	**473460**
97X93	*JOY*	**473239**
97X94	*JOY*	**472394**
97X96	*JOY*	**416444**
97X97	*JOY*	**411245**!
97X98	*JOY*	**415449**!
97X99	*JOY*	**455151**
98005R91	*IH*	**472439**
9800A	*C-R*	**415995**!
9800LPD	*JN-MN*	**455194**
9800LUP	*JN-MN*	**455194**
9805	*C-R*	712012
9810A	*C-R*	**415449**!
981200	*SPICE*	**476838**!
9812013A	*HARWA*	98X120X13
9814	*C-R*	**252277**
981480	*SPICE*	**416332**!
9815	*C-R*	240731
9815LPD	*JN-MN*	**416654**!
9815LUP	*JN-MN*	**416654**!
981605	*OMC*	17720
9818	*C-R*	342517
981RC	*SUL*	**472287**!
9820	*C-R*	441130
9820LPD	*JN-MN*	**415138**!*
9820LUP	*JN-MN*	**415138**!
9821	*C-R*	441130
982259R91	*IH*	370012A
982259R91	*IH*	5473$
9823	*C-R*	441130*
9823545	*NEHO*	370223A=
982483R91	*IH*	100495
982483R91	*IH*	**417349**
982591R91	*IH*	**417262**!
9825LPD	*JN-MN*	450104
9825LUP	*JN-MN*	450104
9826	*C-R*	**252277**
9827	*C-R*	**472311**!
9828	*C-R*	**472311**!
9828-00102	*HINO*	231004
9828-01112	*HINO*	710368
9828-01125	*HINO*	710368
9828-01137	*HINO*	710371
9828-01144	*HINO*	710366
9828-01147	*HINO*	710371
9828-01149	*HINO*	717004
9828-01165	*HINO*	710368
9828-01167	*HINO*	710366
9828-01204	*HINO*	710369
9828-01206	*HINO*	710295
9828-48112	*HINO*	710296
9828-58105	*HINO*	225875
9828-65116	*HINO*	710367
9828-65119	*HINO*	710367
9828-70102	*HINO*	70X95X13
9828-80102	*HINO*	228020
9828-85106	*HINO*	710294
9828-90108	*HINO*	229005
982827102	*HINO*	712009
983006R91	*IH*	6635S
98305	*WITTE*	**472924**!
98305A	*WITTE*	**470898**
98309	*CINMI*	**471785**!
9830LPD	*JN-MN*	**417605**
9830LUP	*JN-MN*	**417605**
9831	*C-R*	**252277**
98317	*TW-CO*	450398
98317	*TW-CO*	**471267**!
9831LPD	*JN-MN*	**481163**!
9831LUP	*JN-MN*	**481163**!
9832	*C-R*	240414*

Mfr. No.	Name	Zero Duplication or Recommended Industrial
983253	*OMC*	17720
9832LPD	*JN-MN*	455397
9832LUP	*JN-MN*	455397
9833	*C-R*	**472311**
9833A	*C-R*	**416921**!
9833S	*NATL*	8705S
9834	*C-R*	**472311**!
9835	*C-R*	240414
9835	*C-R*	**472311**!
983570R1	*IH*	370003A
9837	*C-R*	**472311**!
9838	*C-R*	**472311**!
9839	*C-R*	**471224**!
9840	*C-R*	**471224**!
9840A	*C-R*	**417316**!
9841A	*C-R*	**470530**!
98427996	*IVECO*	713134
98427998	*FIAT*	713064
9843	*C-R*	**471224**
98435	*C-R*	250X280X15
98436545	*FIAT*	713024
9844	*C-R*	**471224**
9844	*KEN*	**471224**
9845	*NATL*	450375
9845	*NATL*	6936S
98451055	*FIAT*	713057
9846	*C-R*	350909
9846	*C-R*	**471224**!
984631	*VIC*	**415035**
9847	*C-R*	**472311**
98471	*HYST*	**415295**
9848	*C-R*	**471224**!
984801R91	*IH*	5406
9848LPD	*JN-MN*	**471652**
9848LPD	*JN-MN*	482208!
9848LUP	*JN-MN*	**471652**
9848LUP	*JN-MN*	482208!
9849	*C-R*	**471224**!
98492	*HYST*	**471341**!
98494989	*IVECO*	713123
9849LPD	*JN-MN*	**473444**
9849LUP	*JN-MN*	**473444**
9850	*C-R*	**471224**!
9851	*C-R*	**471224**!*
9852	*C-R*	**471224**!
98520	*TW-CO*	**474278**!
98524	*HYST*	**472179**
9854	*C-R*	**471224**!
9854LPD	*JN-MN*	**472164**!
9854LUP	*JN-MN*	**472164**!
9858LUP	*JN-MN*	**471424**!
9859	*C-R*	**471224**!
9859	*C-R*	6522S!
9859LPD	*JN-MN*	**471224**!
9859LUP	*JN-MN*	**471224**!
9861	*C-R*	**471224**!
9862	*C-R*	**471224**
9862	*C-R*	**471224**
98630R91	*IH*	6663S
986350	*OTISE*	55199=
9863LPD	*JN-MN*	**416273**!
9863LUP	*JN-MN*	**416273**!
9864	*C-R*	**471224**!
98643	*HYST*	**410737**!
9865	*C-R*	**471224**!
9866LPD	*JN-MN*	**415035**
9866LPD	*JN-MN*	**415035**!
9866LUP	*JN-MN*	**415035**!
9866LUP	*JN-MN*	**415035**
9867	*C-R*	**471224**!
9869	*C-R*	**471224**!
98732	*HYST*	417503

Mfr. No.	Name	Zero Duplication or Recommended Industrial
98750	*C-R*	55224=
987570R1	*IH*	JV753
9876	*C-R*	**471224**!
9876LPD	*JN-MN*	**417344**!
9876LUP	*JN-MN*	**417344**!
9877	*C-R*	**471224**
9878	*C-R*	**471224**!
9879	*C-R*	**471224**
9879	*C-R*	**471224**
987RC	*SUL*	**472287**!
98809	*CATER*	485725N
9881	*C-R*	**471224**
9882	*C-R*	**471689**!
9885	*C-R*	**471224**!
98860R91	*IH*	**472016**
9886LPD	*JN-MN*	**455121**
9886LUP	*JN-MN*	**455121**
9889	*C-R*	6847S
9890A	*C-R*	240319
9891LPD	*JN-MN*	55532=
9891LUP	*JN-MN*	55532=
9892	*C-R*	**471224**!
9892LPD	*JN-MN*	**415711**
9892LUP	*JN-MN*	**415711**
9893	*C-R*	**471270**!
9894	*C-R*	**471270**!
9894	*HYST*	**473215**!
9895	*C-R*	**471270**!
9895	*HYST*	**455032**!
9896	*C-R*	**471270**!
9898	*TOWNR*	**473197**
98X120X13	*SIMRT*	98X120X13
98X120X13SC	*TRSCM*	98X120X13
98X120X13TC	*TRSCM*	98X120X13
9900	*C-R*	343123
990065	*ACF*	40468
9900LPD	*JN-MN*	**471760**
9900LUP	*JN-MN*	**471760**
990101	*ACF*	**472164**!
990132	*SPICE*	**473423**
990132	*VIC*	**473423**
99019R91	*IH*	**471224**!
99022R91	*IH*	**416654**
9903	*C-R*	**473380**
99031	*AM WH*	**472164**!
99032	*AM WH*	**472439**
99049	*C-R*	99049
99049RS	*VIC*	99049
99058	*C-R*	99058
99059	*C-R*	99059
99059RS	*VIC*	99059
99060	*C-R*	99060
99060RS	*VIC*	99060
99062	*C-R*	99062
99062RS	*VIC*	99062
99065	*ACF*	40468
99068	*C-R*	99068
99068RS	*VIC*	99068
9907	*C-R*	**473380**
99076	*C-R*	99076
99076RS	*VIC*	99076
99078	*C-R*	99078
99078RS	*VIC*	99078
9907SKR	*NATL*	370086A
99085	*C-R*	99085
99085RS	*VIC*	99085
99087	*C-R*	99087
99087RS	*VIC*	99087
9909	*C-R*	**471649**!
99094	*C-R*	99094
99096	*C-R*	99096
99096RS	*VIC*	99096

! Industrial Size/Type * Minor Width Difference $ F-M Number Is Part Of A Kit
= The U.S. customer service number is 877-4-TIMKEN. The Canadian customer service numbers are 800-565-4927 (English) and 800-565-0438 (French-Canadian).

Mfr. No.	Name	Zero Duplication or Recommended Industrial
99098	C-R	99098
99098RS	VIC	99098
99100	C-R	99100
99100	C-R	99101
99100RS	VIC	99100
99100RS	VIC	99101
99103	C-R	99103
99103RS	VIC	99103
99106	C-R	99106
99106RS	VIC	99106
99111	C-R	99111
99111RS	VIC	99111
99112	C-R	99112
99112RS	VIC	99112
99114	BR-ST	**471553**!
99114	C-R	99114
99114RS	VIC	99114
99118	C-R	99118
99118RS	VIC	99118
99123	C-R	99123
99125	C-R	99125
99125RS	VIC	99125
99128	C-R	99128
99128RS	VIC	99128
99129	C-R	99129
99129RS	VIC	99129
9912A	C-R	**416654**
99131	C-R	99131
99131RS	VIC	99131
99133	C-R	99133
99133RS	VIC	99133
99134	C-R	99134
99138	C-R	99138
99138RS	VIC	99138
99139	C-R	99139
99139RS	VIC	99139
99143	C-R	99143
99143RS	VIC	99143
99144	C-R	99144
99144RS	VIC	99144
99146	C-R	99146
99146RS	VIC	99146
99147	C-R	99147
99147RS	VIC	99147
99149	C-R	99149
99149RS	VIC	99149
99150	C-R	99150
99150RS	VIC	99150
99152	C-R	99152
99155	C-R	99155
99155RS	VIC	99155
99156	C-R	99156
99156RS	VIC	99156
99157	C-R	99157
99157RS	VIC	99157
9915A	C-R	**470088**
99162	C-R	99162
99162RS	VIC	99162
99165	C-R	99165
99166	C-R	99166
99166	SPG	99166
99166RS	VIC	99166
99168	C-R	99168
99168RS	VIC	99168
99169	C-R	99169
99169RS	VIC	99169
99170	C-R	99170
99170RS	VIC	99170
99171	C-R	99171
99171RS	VIC	99171
99172	C-R	99172
99172RS	VIC	99172
99174	C-R	99174
99174RS	VIC	99174
99175	BR-ST	**450593**!
99175	C-R	99175
99175RS	VIC	99175
99176	BR-ST	**481644**
99176	C-R	99176
99176RS	VIC	99176
99177	C-R	99177
99177RS	VIC	99177
99179	C-R	99179
99179RS	VIC	99179
9918	C-R	**471649**!
99181	C-R	99181
99181RS	VIC	99181
99186	C-R	99186
99186RS	VIC	99186
99187	C-R	99187
99187RS	VIC	99187
99189	C-R	99189
99189RS	VIC	99189
9918LPD	JN-MN	**417134**
9918LUP	JN-MN	**417134**
9918M1	C-R	**471649**!
9919	C-R	**471649**!
99190	C-R	99190
99193	C-R	99193
99193RS	VIC	99193
99196	C-R	99196
99196RS	VIC	99196
99199	C-R	99199
99199RS	VIC	99199
99200	C-R	99200
99200RS	VIC	99200
992018	LONG	**414045**!
992019	LONG	**471224**!
992021	LONG	**470898**!
992024	LONG	450398
992024	LONG	**471267**!
992026	LONG	**473197**
99205	C-R	99205
99205RS	VIC	99205
99210	C-R	99210
99210RS	VIC	99210
99212	C-R	99212
99212RS	VIC	99212
99215	C-R	99215
99215RS	VIC	99215
99218	C-R	99218
99218RS	VIC	99218
9922	C-R	**471649**!
99220	C-R	99220
99225	BR-ST	**473016**!
99225	C-R	99225
99225RS	VIC	99225
99226	C-R	99226
99226RS	VIC	99226
99227	C-R	99227
992280	AMC	40316S
992293	WILYS	**415458**!
992297	AMC	**415458**!
992297	WILYS	**415458**!
9923	C-R	**471649**!
99230	C-R	99230
99230RS	VIC	99230
99231	C-R	99231
99231RS	VIC	99231
99233	C-R	99233
99233RS	VIC	99233
99235	C-R	99235
99235RS	VIC	99235
99236	C-R	99236
99236RS	VIC	99236
99237	C-R	99237
99237RS	VIC	99237
99238	C-R	99238
99238RS	VIC	99238
9924	C-R	**471649**!
99240	C-R	99240
99240RS	VIC	99240
99242	C-R	99242
99243	C-R	99243
99243RS	VIC	99243
99248	C-R	99248
992481C91	IH	370150A
99248RS	VIC	99248
99250	C-R	99250
99250RS	VIC	99250
99253	C-R	99253
99253RS	VIC	99253
99254	C-R	99254
99254RS	VIC	99254
99256	C-R	99256
99256RS	VIC	99256
99259	C-R	99259
99259RS	VIC	99259
9926	C-R	**471649**!
99260	C-R	99260
99260RS	VIC	99260
99261	C-R	99261
99261RS	VIC	99261
99262	C-R	99262
99262RS	VIC	99262
99264	C-R	99264
99267	C-R	99267
99267RS	VIC	99267
99269	C-R	99269
99269RS	VIC	99269
99272	C-R	99272
99272RS	VIC	99272
99273	C-R	99273
99273RS	VIC	99273
99274	C-R	99274
99274RS	VIC	99274
99275	C-R	99275
99275RS	VIC	99275
99276	C-R	99276
99276RS	VIC	99276
9927HX	SPG	331227H
99281	C-R	99281
99281RS	VIC	99281
99282	C-R	99282
99282RS	VIC	99282
99286	C-R	99286
99286RS	VIC	99286
99287	C-R	99287
99287RS	VIC	99287
9929	C-R	**471649**!*
99290	C-R	99290
99290RS	VIC	99290
99291	C-R	99291
99291RS	VIC	99291
99292	C-R	99292
99293	C-R	99293
99293RS	VIC	99293
99294	C-R	99294
99294RS	VIC	99294
99296	C-R	99296
99296RS	VIC	99296
99298	C-R	99298
99298RS	VIC	99298
99299	C-R	99299
99299RS	VIC	99299
99300	C-R	99300
99300RS	VIC	99300
99303	C-R	99303
99303RS	VIC	99303
99307	C-R	99307
9930LPD	JN-MN	**415196**!
9930LUP	JN-MN	**415196**!
99311	C-R	99311
99311RS	VIC	99311
99312	C-R	99312
99312RS	VIC	99312
99313	C-R	99313
99313RS	VIC	99313
99315	C-R	99315
99315RS	VIC	99315
99317	BR-ST	**471567**!
9932	C-R	**471649**!
99322	C-R	99322
99322RS	VIC	99322
99324	C-R	99324
99324RS	VIC	99324
99325	C-R	99325
99325RS	VIC	99325
99331	C-R	99331
99331RS	VIC	99331
99333	C-R	99333
99333RS	VIC	99333
99334	C-R	99334
99334RS	VIC	99334
99337	C-R	99337
99337RS	VIC	99337
99339	C-R	99339
99339RS	VIC	99339
9934	C-R	**471649**!
99340	C-R	99340
99340RS	VIC	99340
99347	C-R	99347
99347RS	VIC	99347
99349	C-R	99349
99349RS	VIC	99349
9935	C-R	**471649**!
99350	C-R	99350
99350RS	VIC	99350
99351	C-R	99351
99351RS	VIC	99351
99354	C-R	99354
99354RS	VIC	99354
99356	C-R	99356
99356RS	VIC	99356
9935SS	JN-MN	**473235**!*
99362	C-R	99362
99362RS	VIC	99362
99363	C-R	99363
993631	ACF	455556
99363RS	VIC	99363
99364	C-R	99364
99364RS	VIC	99364
99367	C-R	99367
99367RS	VIC	99367
99368	C-R	99368
99368RS	VIC	99368
99369	C-R	99369
99369RS	VIC	99369
9937	C-R	**471649**!
99372	C-R	99372
99372RS	VIC	99372
99374	C-R	99374
99374RS	VIC	99374
99376	C-R	99376
99376RS	VIC	99376
993785	ACF	**472636**!
993802	ACF	6270
993803	ACF	5401

! Industrial Size/Type * Minor Width Difference

Mfr. No.	Name	Zero Duplication or Recommended Industrial
99387	C-R	99387
99387RS	VIC	99387
9939	C-R	**471649**!
993926	GWI	**254287**
99393	C-R	99393
99393RS	VIC	99393
99395	C-R	99395
99395RS	VIC	99395
99399	C-R	99399
99399RS	VIC	99399
99400	C-R	99400
99401	C-R	99401
99401RS	VIC	99401
994024TC	SPG	**330699**
99406	CHRYS	**473313**!
99406	NPG	710005
994107TC	SPG	994107
994108TC	SPG	994108
994129TD	SPG	994129
99413	C-R	99413
99413RS	VIC	99413
99423	C-R	99423
99423	CLARK	**473420**
99423RS	VIC	99423
99424	C-R	99424
99424RS	VIC	99424
994258	AMC	**473228**
994258	AMGEN	**473228**
994261	AMC	9912
994261	AMGEN	9912
994311TC	SPG	994311
99435	C-R	99435
99435RS	VIC	99435
99437	C-R	99437
99437RS	VIC	99437
99440	BR-ST	**471649**!
9945	HYST	**415449**!
99450	C-R	99450
99450RS	VIC	99450
99452	C-R	99452
99452RS	VIC	99452
99463	C-R	99463
99463RS	VIC	99463
99468	C-R	99468
99468RS	VIC	99468
99472	C-R	99472
99472RS	VIC	99472
99473	C-R	99473
99473RS	VIC	99473
99475	C-R	99475
99475RS	VIC	99475
9947LPD	JN-MN	**471141**!
9947LUP	JN-MN	**471141**!
99484	CHRYS	**471424**!
9949	C-R	**471649**!*
99491	C-R	99491
994912	WILYS	6465
99492	C-R	99492
99492RS	VIC	99492
99494	C-R	99494
99494RS	VIC	99494
99498	C-R	99498
99498RS	VIC	99498
99499	C-R	99499
99499RS	VIC	99499
994D4	WHITE	50560
99515	BR-ST	**476838**!
9951LPD	JN-MN	**415351**!
9951LUP	JN-MN	**415351**!
99525	C-R	99525
99525RS	VIC	99525
9952LPD	JN-MN	**473228**
9952LUP	JN-MN	**473228**
99549	C-R	99549
99549RS	VIC	99549
9955LPD	JN-MN	**472179**
9955LUP	JN-MN	**472179**
9956SS	JN-MN	**473405**
99575	C-R	99575
99575RS	VIC	99575
9958	CHRYS	**470954**
99599	C-R	99599
99599RS	VIC	99599
9960	C-R	**474250**!
99606	C-R	99606
99606RS	VIC	99606
99625	C-R	99625
99625RS	VIC	99625
99630	C-R	99630
99630RS	VIC	99630
9963LPD	JN-MN	**415138**!
9963LUP	JN-MN	**415138**!
9964LPD	JN-MN	**417549**!
9964LUP	JN-MN	**417549**!
9965	C-R	**471689**!
99650	C-R	99650
99650RS	VIC	99650
9966	C-R	**471689**!
996693	CLARK	204017
9967	C-R	**471689**
99675	C-R	99675
99675RS	VIC	99675
99680	C-R	**417602**!
996816	C-R	**417603**!
996816M1	C-R	**417603**!
99690	C-R	**55301S**
99690M1	C-R	**55301S**
99700	C-R	99700
99700RS	VIC	99700
997151TC	SPG	997151
997179TC	SPG	**470954**
997295TD	SPG	997295
9973LPD	JN-MN	**415867**
9973LUP	JN-MN	**415867**
9974	C-R	**471689**!
9975	C-R	**471689**!
99750	C-R	99750
99750RS	VIC	99750
9975LPD	JN-MN	**471646**!
9975LUP	JN-MN	**471646**!
99766	CHRYS	481507N=
9977	C-R	**471689**!
99786	CINMI	470050
99787	C-R	99787
99787RS	VIC	99787
9979	C-R	**471689**!
99804	BR-ST	**471689**!
998092	AMC	5778
998092	AMGEN	5778
998123	AMC	9316
9982	C-R	**471689**!
9983	C-R	**471689**!
9983LPD	JN-MN	**471684**!
9983LUP	JN-MN	**471684**!
9984	C-R	**471689**!
998497	AMC	**480821**!
9985	C-R	**471689**!
99858	CHRYS	**470954**
9989	C-R	**471689**!
998J	OSHKO	**415036**
999.113.012.50	PORSC	1973
999.113.029.50	PORSC	226020
999.113.049.50	PORSC	226020
999.113.057.50	PORSC	226520
999.113.057.52	PORSC	226520
999.113.215.40	PORSC	229010
999.113.231.40	PORSC	60X85X8!
999.113.263.40	PORSC	60X85X8!
999.113.290.42	PORSC	223050
999.113.475.40	PORSC	710196
999.113.476.40	PORSC	716102
9990	C-R	**471689**!
99902	CINMI	470086
99911323540	PORSC	65X85X10
99911326440	PORSC	229005
99911328240	PORSC	223020
99911346140	PORSC	229010
9992	C-R	25X42X7V
9992LPD	JN-MN	**471567**!
9992LUP	JN-MN	**471567**!
9993	C-R	**471689**!*
9993LPD	JN-MN	**415072***
9993LUP	JN-MN	**415072**
9994	C-R	**471689**!*
9995	C-R	**471689**!
99954	C-R	**415995**!
99954	C-R	**415995***
9997	C-R	**471689**!
99977	BR-ST	**481443**!
9998	C-R	**471689**!
9998LPD	JN-MN	**415995**!
9998LUP	JN-MN	**415995**!
999KB1608	MACK	**470954**!
999KB1675	MACK	**417210**!
999KB1920	MACK	**416404**!
999KB1921	MACK	**472157**
999KB1921	MACK	**472157**!
99GW240144-6	TROS	**473235**
9A6904	LEYLD	**471192**
9A7847	FED	**415254**
9A8009	FED	**472636**!
9B1208	CATER	**470530**!
9B140	CATER	**471763**
9B5662	CATER	**415437**
9B6453	CATER	**471750**!
9B8053	CATER	**471530**
9D6581	CATER	710023
9D6582	CATER	710024
9D6584	CATER	710026
9D6585	CATER	710027
9F3487	CATER	**471466**!
9F3848	CATER	**471554**!
9F3850	CATER	**472016**
9F3958	CATER	**471103**!
9F5088	CATER	**416125**!
9F7959	CATER	415213N
9F8616	CATER	**476470**
9H223	CATER	**470954**
9H223	IH	**470954**
9H2257	CATER	**473460**
9H2258	CATER	**472924**!
9H6079	CATER	**417316**!
9H6504	CATER	**413246**
9H8839	CATER	**471413***
9H9484	CATER	**472572**!
9H9678	CATER	**470380**!
9J0107	CATER	J1122
9J0110	CATER	J1126
9J107	CATER	J1122
9J110	CATER	J1126
9K2199	CATER	**415066**
9L126	CATER	470328
9L126	CATER	**481213**!
9L6021	CATER	J1895*=
9L7188	CATER	**415725**!
9L7600	CATER	39801
9L7735	CATER	**473474**
9L7736	CATER	39801
9L8336	CATER	J1606
9L8483	CATER	**416167**=
9L9077	CATER	**415725**!
9L9185	CATER	**473474**
9M3879	CATER	**416892**!
9M5159	CATER	**470565**=
9M5351	CATER	**473367**!
9M7432	CATER	**471224**!
9M7962	CATER	**415449**!
9N0307	CATER	**415303**!
9N1190B	FORD	6336S
9N18183	FORD	240385
9N307	CATER	**415303**!
9N4251	FORD	**410987**=
9N703A	FORD	**471829**
9N703A2	FORD	**471829**
9N703B	FORD	**471829**
9N749	DURA	**473214**!
9N749	FORD	**473214**!
9N749	SPICE	**473214**
9N749B	DURA	**473214**!
9N750	DURA	**473236**!
9N750	SPICE	**473236**!
9N750B	DURA	**473236**!
9N750B	FORD	**473236**!
9S2391	CATER	**472258**
9S2400	CATER	J1824*=
9S3111	CATER	3807
9SK-095	WHITE	5M466
9SK0524	WHITE	**474273**
9X18X7SC	TRSCM	9X18X7
9X18X7TC	TRSCM	9X18X7
9X22X7	SIMRT	9X22X7
9X22X7SC	TRSCM	9X22X7
9X22X7TC	TRSCM	9X22X7
9X24X7	FORSH	9X24X7
9X24X7	SIMRT	9X24X7
9X24X7SC	TRSCM	9X24X7
9X24X7TC	TRSCM	9X24X7
9X26X7	FORSH	9X26X7
9X26X7	SIMRT	9X26X7
9X26X7SC	TRSCM	9X26X7
9X26X7TC	TRSCM	9X26X7
9X7547	CATER	320510V*
9Y-7625	CATER	600016
9Y7624	CATER	901017
9Y9895	CATER	41163T

! Industrial Size/Type * Minor Width Difference

= The U.S. customer service number is 877-4-TIMKEN. The Canadian customer service numbers are 800-565-4927 (English) and 800-565-0438 (French-Canadian).

ABBREVIATIONS TO MANUFACTURERS

ABBREVIATION	MANUFACTURER NAME
ACDEL	A/C Delco
AIRCO	Aircooled Motors
AIWDI	AI/WDI
AJUSA	Ajusa
ALFAR	Alfa Romeo
ALLCH	Allis-Chalmers
ALOY	Alloy Mfg.
ALTFO	Alten Fndry & Mach
AM BO	American Bosch
AM BR	American Brake Shoe
AM CA	American Can Co.
AM CH	American Chain
AM HO	Amer Hoist & Derrick
AM MA	American Marietta Co.
AM WH	American Wheelabrator
AMGEN	AM General
AT IM	Atlas Imperial Diesel
AT SU	Atlas Supply
AT-PL	Athens Plow
AU-LI	Auto Lite
AU-WS	Austin-Western
AUPRO	Auto Pro (Short LIne)
AUTDP	Auto Pro
AUTOB	Autobianchi
AUTOZ	AutoZone
AUTSP	Auto Specialities
AVANT	Avanti
B-L-H	Baldwin-Lima-Hamilton
BADGE	Badger Northland
BARRE	Barrentine Mfg.
BARTL	Bartell
BE-AR	Beck/Arnley
BEHLN	Behlen Mfg. Co.
BENDI	Bendix-Westinghouse
BESTV	Best Valu (Victor Retail)
BL-KN	Blaw Knox
BLUE	John Blue Co.
BORGW	Borg Warner
BOSTN	Boston Gear
BOWEN	Bowen Mc Laughlin
BR-ST	Briggs & Stratton
BR-WN	Braden Wnch
BRAD	David Bradley Mfg. Works
BRADF	Brad Foote Gear Works
BRCWY	Brockway
BRWNG	Browning Mfg.
BTM	Bantam
BU-SP	Buff Springfld Roll
BUC-E	Bucyrus-Erie
BULLD	Bulldog
BUSHH	Bush Hog
BUTBN	Butler Bin
C-P	Chicago Pneumatic
C-R	Chicago Rawhide
C-W	Curtiss-Wright
CALI	California Pellet
CALSO	E L Caldwell & Sons
CANAD	Canadian Car & Foundry
CARDX	Cardox Co.
CARQU	Carquest
CARTR	Carter Carburetor Division
CARVR	Carver Pump Co.
CATER	Caterpillar
CEMAC	Cemac Vacuum
CH MA	Charles Machine Works
CHALL	Challenge Cook
CHAMP	Champion Carrier
CHECK	Checker
CHEL	Chelsea
CHERY	Cherry Burrell Co.
CHRYS	Chrysler
CINMI	Cinn Milling Mach.
CL-HU	Clark Hurth (N. Carolina)
CLAYE	Clay Equipment
CLAYN	Clayton Mfg. Co.
CLEVI	Clevite Engine Parts
CLIMX	Climax
CLIN	Clinton Engines
CLOYE	Cloyes Gear
CLSON	Clarkson (National Mtr.)
CLSTL	Cleveland Steel Product
CNTIR	Canadian Tire (Short Line)
COC	Cockshutt
COLLS	Collins Radio Co.
CONCA	Continental Can Co.
COND	Consolidated Diesel
CONDC	Condec Co.
CONE	Cone Drive Gears
CONSL	Consolidated Bearing
CONST	Const Machy Sales Co.
CONTI	Continental
COOK	Cook Brothers Equipment
COTTA	Cotta Transmission
CR-CF	Chris Craft
CROSL	Crosley
CRUSA	Crusader Marine
CTD	Canadian Tool & Die
CUMMI	Cummins
CURTS	Curtis Machine
CUSH	Cushman
CYCLO	Cycloblower Co.
DAEWO	Daewoo
DAIHA	Daihatsu
DALMO	Dalmo Victor
DANMA	Danuser Machine Works
DAVEY	Davey Compressor
DCORP	Dyna Co.
DEMPC	Dempster Pumps Co.
DENCO	Dennis Co.
DET	Detroit
DETRL	Detroit Retail
DETRO	Detroit Diesel
DEVIL	Devilbliss Co.
DEXTR	Dexter
DGASK	Detroit Gasket
DIA	Diamond-T
DIESA	Diesel America
DIESG	Diesel Guard
DISOG	Disogrin
DIVCO	Divco-Wayne
DODGE	Dodge Mfg.
DODM	Dodge Mfg.
DOMGA	Dominion Gasket
DOMIN	Dominion Road Machinery
DRESS	Dresser Industry
DYNSL	Dynamic Seal
EARTH	Earthmaster
EBERTH	Eberhardt Denver
EDELM	Edelman
EGDYN	Engine Dynamics
EL-MO	Electric Motors
EL-PA	Elwell-Parker
EL-WH	Electric Wheel
EMRSN	Emerson Electric
EMSCO	Emsco Corp.
ESSIC	Essick Mfg. Co.
EUCLD	Euclid
EUROS	Eurospares
EVERS	Eversman Mfg. Co.
F-R-H	Fate-Roote-Heath
FAIRB	Fairbanks-Morse
FAIRM	Fairmont Railway Motors
FALKC	Falk Corp.
FAWIC	Fawick Airflex Co.
FED	Federal
FEDMG	Federal-Mogul
FELPC	Fel-Pro
FI-AL	Fiat Allis
FI-CO	Filper Co.
FIRES	Firestone
FITZ	Fitzgerald
FLXIB	Fixible
FME	Federal-Mogul
FMW	Federal-Mogul
FOOTE	Foote Brothers Gear & Machine
FORSH	Forsheda
FPDSL	FP Diesel
FR-HT	French & Hecht
FREIG	Freightliner
FRKLN	Franklin Equipment
FRUEH	Fruehauf
FT-WA	Fort Wayne Truck Parts
FULLE	Fuller
GA-WO	Garland Works
GABR	Gabriel
GAL	Galion
GARCI	GARCIA
GARLK	Garlock
GE	General Electric Corp.
GEM	Gemmer
GERL	Gerlinger
GIB	Gibson
GILSN	Gilson Brothers
GM	General Motors Corp.
GN-TI	General Tire
GO-TI	Goodyear Tire
GOODM	Goodman
GR-DV	Gardner Denver
GR-RP	Gorman Rupp
GRAM	Graham
GRAY	Gray Marine
GREEN	Green Ball Bearing
GUARA	Guaranteed
GWI	Gar Wood Industries
H-S	Hall-Scott
HARN	Harnischfeger Corp.
HARRI	Harris Mfg. Co.
HART	Hart Carter Co.
HARWA	Harwall
HENRY	Henry Mfg.
HERCU	Hercules
HESST	Hesston
HI-EQ	Highway Equipment
HK-SY	Hawker-Siddeley
HOLLE	Holley
HR-DV	Harley-Davidson
HU-WR	Huber-Warco
HUB-C	Hub City Iron
HUGKE	Hughes-Keenan
HUME	Hume Hd Co.
HWY	Hi-way Trailers
HYST	Hyster
HYUND	Hyundai
IDEAL	Ideal Division
IG-RA	Ingersoll Rand
IH	International
INTDE	International Derrick
IPS	International Parts System
IRON	Iron Fireman Mfg. Co.
ISP	International Seal & Packing
JA-HE	Jack And Heintz Inc.
JA-MI	Jaeger Mixer
JAC	Jacobsen
JAE	Jaeger
JAGUA	Jaguar
JEFF	Jeffrey
JN-CR	John Crane
JN-MN	Johns-Manville
JNSON	Johnson Mfg. Co.
JOHND	John Deere
KELSE	Kelsey-Hayes
KEN	Kenworth
KERSH	Kershaw
KEWNE	Kewanee Machine

ABBREVIATIONS TO MANUFACTURERS

ABBREVIATION	MANUFACTURER NAME
KINGN	Kingston Products Corp.
KINNR	Kinner Motors
KNICK	Knicker Bocker Co.
KOEH	Koehring
KOHL	Kohler
KOMAT	Komatsu
KRSE	Krause Plow
KY-CL	Korody Colyer
L & N	Leeds & Northrup
L & S	L & S Bearing
LABEQ	Laboratory Equipment Co.
LAMBO	Lamborghini
LANCA	Lancia
LAU	Lauson
LAVIN	Lavine Gear Co.
LAVOI	Lavoie Laboratories
LAWN	Lawn Boy
LAZOR	Lazorlite
LEECE	Leece Neville Co.
LEMCO	Lempco
LETN	Le Tourneau-Westinghouse
LEYLD	British Leyland
LF-PT	Lift Parts Mfg. Inc.
LIGET	Ligget Spring Axle
LILIS	Lilliston
LIMA	Lima Electric Mtrs.
LISLE	Lisle Tool, Clarinda, Ia
LK-BT	Link Belt
LOKWD	Lockwood Div.
LUF	Lufkin Industries
MA-PR	Marine Products
MAGNA	Magna American
MANT	Manitowoc
MARI	Marion Shovel
MARMO	Marmon
MASSE	Massey-Ferguson
MASTE	Master Electric Co.
MATHR	Mather
MAXIF	Maxiforce
MC-CL	Mc Culloch
MC-NO	McQuay-Norris
MCBED	McBee Distributors
MCCOR	Mc Cord
MCCRL	McCord Retail
MCKIN	Mckinnon Ind.
MECH	Mechanex
MERCE	Mercedes-Benz
MERCM	Mercury Marine
MESC	Mesaco
MICH	Michigan (see Clark)
MID	Midland Co.
MID-R	Midland Ross
MIHLE	Miehle
MINMA	Minister Machine Co.
MINNM	Minneapolis-Moline
MIRCO	Mirco Sleeve
MISSI	Mission Mfg. Co.
MITSU	Mitsubishi
MIX	Mixing Equipment
MIXMO	Mixermobile Mfg. Co.
MO-CH	Morse Chain
MOHWK	Mohawk Mfg.
MOTO	Moto Power
MRGAS	Mr Gasket
MTR-C	Motor Coach Ind.
MURPH	Murphy Diesel
MURRA	Murray Corporation
MUSKE	Muskegon
MWKEL	M W Kellogg Co.
MYERS	Myers Sherman
NAK	Nakata S.A. Industrial
NATAU	National Automatic Tool Co.
NATEN	National Engineering Co.
NATL	National Seal Number
NATSU	National Supply Co.
NAVST	Navistar
NDEP	New Departure
NEHO	New Holland
NEWPR	New Process
NEWVR	New Venture Gear
NISSA	Nissan
NORDG	Nordberg Mfg. Co.
NOVI	Novi Equipment
NPG	New Process
NRWST	Northwest Engineering
O-M	Outboard Marine
OILGR	Oil Gear Co.
OLIVE	Oliver
OSHKO	Oshkosh
OTISE	Otis Elevator
OWS	Oil Well Supply
P-C	Perfect Circle
PAARS	Paarss Automotive
PACIF	Pacific Car & Foundry
PARGN	Paragon Gear
PARK	Parkersburg
PAYEN	Payen Seals
PEERC	Peerless Production Co.
PERFC	Perfection American
PERKI	Perkins
PERSN	Pearson Ben
PETTI	Pettibone-Mulliken
PEUGE	Peugeot
PI-BA	Pioneer Barnes
PORSC	Porsche
PORTR	Portable Rig Co.
PREC	Precision
PREST	Prestolite
PTDEP	Parts Depot (Short Line)
PUL	Pullman Co.
PYUNG	Pyung Hwa Industrial
QAP	Quality Auto Parts
RACIN	Racine Tool & Machine Co.
READY	Ready Power Co.
REINZ	Reinz-Dichtungs-GMBH
RELEE	Relianc Electric & Engineering
RELIA	Reliance Industries
RENAU	Renault
REPUB	Republic Gear
REULD	Reuland Electric
REX	Rex Chain Belt Co.
RFT	RFT (SKF/CR)
ROCK	Rockhill
ROCKE	Rocket
ROCKW	Rockwell
ROL	Rol Mfg.
ROLRL	Rol Retail
ROOTE	Rootes
ROSS	Ross Gear
ROTO	Rototiller
SABO	Sabo Oil Seals Of Brazil
SCHWI	Schwitzer Co.
SCOT	Scott Atwater
SEALD	Sealed Power
SEALR	Sealright Co.
SEAMA	Seaman Motors
SELAS	Selastomer
SHEP	Sheppard
SHOV	Shovel Supply
SIDEW	Sidewinder
SIMPL	Simplicity Tractor
SIMRT	Simrit
SKIL	Skilsaw
SNFLW	Sunflower Implements
SOLAR	Solar Division
SPECI	Specialty Products
SPERY	Sperry Rand
SPG	Sealing Products Group
SPICE	Spicer
STAND	Standard
STAR	Starline
STDFG	Standard Forge
STDRL	Standard Retail
STEEL	Steel Products Eng. Co.
STEM	Stemco
STERL	Sterling
STN-S	Standard Steel
STUDE	Studebaker
SUBAR	Subaru
SUL	Sullivan
SUPER	Superior Diesel
SUZUK	Suzuki
TALBO	Talbot
TAYLR	Taylor Machine Works
TEKNI	Tekni Craft
TEREL	Terrell Machine Co.
TERX	Terex
TEXAS	Texas Iron Works
THEW	Thew Shovel
THIOK	Thiokol Chemical
TLSMI	T. L. Smith Co.
TMTR	Towmotor
TOWNR	Towner Mfg.
TOYOT	Toyota
TRAC	Tractomotive
TRACN	Trackson Co.
TRACS	Trackless Tank Co.
TRANG	Transmission And Gear
TRANS	Transtec
TREME	Tremec
TRISL	Triseal
TRMBL	Trailmobile
TROS	Trostel
TRSCM	Transcom Oil Seals
TRU-P	Tru Parts Mfg.
TRUK	Truckstell
TW-CO	Twin Coach
TW-DI	Twin Disc
ULRIC	Ulrich Products Co.
UNIT	Unit Crane & Shovel
UNIVE	Universal
US-EL	U.S. Electrical Motors
VAUXH	Vauxhall
VERSA	Versatile
VIC	Victor
VICK	Vickers
VICRL	Victor Retail
VILA	Villafane Auto Supply, Inc.
VOLWH	Volvo White
W-PTS	World Parts
WAGMA	Wagner Tool & Machine Co.
WAGNR	Wagner Tractor
WALKE	Walker Vehicle Co.
WARNE	Warner
WARNR	Warner Gear
WAUKE	Waukesha
WAYNE	Wayne Mfg. Co.
WESTO	Western Auto
WESTR	Westrac Co.
WGEAR	Western Gear Co.
WHELA	Wheland Co.
WILSO	Wilson Mfg. Co.
WILYS	Willys
WIP-L	Whip-I Crank Seals
WISCO	Wisconsin
WOODB	Wood Bros
WOOL	Wooldridge
WORLD	World Gasket
Y-T	Yale & Towne
YARD	Yardman

Mfr. No.	Name	Zero Duplication or Recommended Industrial
84385	*MCCOR*	**412920**!
84388	*FITZ*	**470898**!
84388	*MCCOR*	**470605**!
84389	*FITZ*	**473462**
84389	*MCCOR*	**413247**!
843893M1	*MASSE*	**472015**!
8438LPD	*JN-MN*	417500
84390	*FITZ*	**410987**!
84390	*MCCOR*	**473448**
843908	*WHITE*	240735
84391	*MCCOR*	**450446**
84392	*MCCOR*	450463
84394	*FITZ*	**473238**
84395	*FITZ*	5877
84395	*MCCOR*	**473462**
84396	*FITZ*	**410190**
84396	*MCCOR*	**473235**
84397	*FITZ*	200354
84398	*FITZ*	**472258**
84399	*MCCOR*	6336S
8440	*C-R*	473414
844001176	*IH*	**416404**!
844001177	*IH*	**417351**!
844001180	*IH*	**472924**!
844001181	*IH*	415871
844001183	*IH*	**417546**!
84402	*FITZ*	6936S
84402S	*FITZ*	6936S
84403	*FITZ*	**415041**
84404	*FITZ*	340724!
84404	*MCCOR*	**473179**
84406	*MCCOR*	**410987**=
84408	*FITZ*	**471827**
84408	*MCCOR*	**450068**
84408S	*FITZ*	**471827**
84409	*FITZ*	**470898**
84409	*MCCOR*	**472070**
8441	*C-R*	473414
84410	*MCCOR*	450285
84411	*FITZ*	**470625**!
84412	*MCCOR*	450311
84414	*MCCOR*	**472492**!
84415	*FITZ*	**415072**
84415	*MCCOR*	**473197**
844159	*HESST*	**471391**!
84416	*MCCOR*	50528
84417	*MCCOR*	50631
84419	*FITZ*	470950!
84419	*FITZ*	6241S
84420	*MCCOR*	**450776**!
84421	*MCCOR*	**416271**!
84422	*FITZ*	**471255**!
84422	*MCCOR*	**416664**!
84423	*FITZ*	**411253**!
8442SS	*JN-MN*	**471649**!
84431	*FITZ*	5070
84431	*MCCOR*	**471271**!
84432	*FITZ*	**470606**!
84434	*MCCOR*	**471272**!
84435	*MCCOR*	**413246**
84437	*FITZ*	5924
84437	*MCCOR*	**471316**
84438	*MCCOR*	**470806**
84438S	*MCCOR*	**470806**
84439	*MCCOR*	450808
8443LPD	*JN-MN*	**472319**
8443LUP	*JN-MN*	**472319**
84441	*FITZ*	**470898**!
84443	*FITZ*	5921
84444	*MCCOR*	50501
84445	*FITZ*	5957S
84446	*MCCOR*	**450143**

Mfr. No.	Name	Zero Duplication or Recommended Industrial
844464	*HESST*	**416071**
84447	*FITZ*	**471192**
84448	*MCCOR*	200600
84449	*MCCOR*	80313
84452	*FITZ*	**471554**!
84452	*MCCOR*	**473440**!
84453	*FITZ*	**471192**
84454	*MCCOR*	**410737**!
84456	*FITZ*	473435
84456	*MCCOR*	**472439**
84457	*FITZ*	**415001**!
84458	*MCCOR*	**472015**!
84459	*MCCOR*	**473241**
84461	*MCCOR*	6547
84463	*FITZ*	**471787**
84463	*MCCOR*	40094S
84464	*MCCOR*	40097S
84465	*MCCOR*	**472015**!
84468	*FITZ*	**471689**!
84468	*MCCOR*	**470898**
84469	*FITZ*	**472354**!
84469	*MCCOR*	6532S=
8446A	*C-R*	80313
84470	*FITZ*	**450400**
84470	*MCCOR*	**473238**!
84471	*MCCOR*	**471391**!
84472	*MCCOR*	**471870**!
84473	*FITZ*	**416654**
84473	*MCCOR*	**472492**!
84474	*FITZ*	**472016**
84474	*MCCOR*	**472287**!
84475	*FITZ*	**415001**!
84475	*MCCOR*	**472409**
84475S	*MCCOR*	**472409**
84476	*FITZ*	450467
84476	*MCCOR*	**471763**
84477	*FITZ*	**472636**!
84477	*MCCOR*	**471689**!
84478	*FITZ*	**415449**!
84478	*MCCOR*	**471271**!
84479	*FITZ*	**415960**
84481	*MCCOR*	**473459**
84481H	*MCCOR*	**473459**
84483	*FITZ*	**470530**!
84483	*MCCOR*	**415449**!
84484	*FITZ*	**472394**
84484	*MCCOR*	**411376**!
84485	*FITZ*	**474276**!
84485	*MCCOR*	**470565**!
84486	*FITZ*	**473227**!
84486	*MCCOR*	**416271**!
84487	*FITZ*	**411330**!
84487	*MCCOR*	450803
84488	*FITZ*	**416654**!
84488	*MCCOR*	450655=
84489	*FITZ*	**415483**!
84490	*MCCOR*	**450765**!
84491	*FITZ*	**410308**!
84492	*FITZ*	**450307**
84492	*MCCOR*	**470712**!
84493	*FITZ*	**471141**!
84495	*MCCOR*	450313
84497	*FITZ*	353141!
84497	*MCCOR*	6180=
844974	*WHITE*	**417171**!
84498	*MCCOR*	**411394**!
84499	*FITZ*	6064
84499	*MCCOR*	**473461**!
8449SS	*JN-MN*	470950!
8449SS	*JN-MN*	6241S
844F-6700-AA	*FORD*	712101
844F-6C270-AA	*FORD*	712102

Mfr. No.	Name	Zero Duplication or Recommended Industrial
844RC	*SUL*	**473238**!
84500	*FITZ*	**415995**!
84500	*MCCOR*	200640
84501	*MCCOR*	**473239**
84501S	*FITZ*	6241S
84502	*FITZ*	40566S
84503	*FITZ*	2081
84503	*MCCOR*	**450472**!
8450413	*GMC*	**470682**
845045	*WHITE*	**415302**
84506	*MCCOR*	**473474**
84507	*MCCOR*	210914
84508	*FITZ*	**471835**!
84508	*MCCOR*	**472924**
84509	*FITZ*	**473235**
84509	*MCCOR*	210945
84510	*MCCOR*	**472924**!
84511	*FITZ*	**417316**!
84511	*MCCOR*	**410987**!
84512	*FITZ*	6465
84512	*MCCOR*	**473234**!
84513	*FITZ*	**470354**
84514	*FITZ*	6358
84515	*MCCOR*	40627S=
84516	*FITZ*	**473228**
845161	*WHITE*	**417158**!
84517	*MCCOR*	5MR1008
84519	*FITZ*	40769S
84519	*MCCOR*	**470530**!
84523	*FITZ*	6966S
84523	*MCCOR*	**473442**!
84524	*FITZ*	**410825**
84526	*MCCOR*	413479
84527	*FITZ*	40576S
84527	*MCCOR*	**412119**!
845274	*WHITE*	**471570**!
845275	*WHITE*	**417181**!
845276	*WHITE*	**472179**
84528	*FITZ*	**473229**
84529	*FITZ*	6270
8452A	*C-R*	**471649**!
84530	*FITZ*	5401
84530	*MCCOR*	**450911N**!
84530K	*FITZ*	5401
84532	*MCCOR*	6636S
84533	*FITZ*	493291
84533	*MCCOR*	**410708**
84534	*FITZ*	450335
84534	*MCCOR*	**473179**
84535	*FITZ*	**455151**
84536	*FITZ*	42763
84536	*MCCOR*	**473016**!
84537	*MCCOR*	**472150**
84538	*FITZ*	**450776**!
84538	*MCCOR*	**450984**
84539	*FITZ*	**450776**!
84539	*MCCOR*	**416271**!
84540	*FITZ*	6489
84541	*FITZ*	6465
84541	*MCCOR*	**472164**!
84542	*FITZ*	417516
84543	*FITZ*	**472439**
84544	*MCCOR*	**470764**!
84544	*MCCOR*	50764
84545	*FITZ*	**417316**!
84545	*MCCOR*	6785
84546	*FITZ*	**415697**!
84546	*FITZ*	455547
84546	*MCCOR*	**416271**!
84547	*FITZ*	3210
84547	*MCCOR*	**410308**
84548	*MCCOR*	205004

Mfr. No.	Name	Zero Duplication or Recommended Industrial
84549	*MCCOR*	6626S
84549K	*FITZ*	5403
84550	*FITZ*	**471316**
84551	*FITZ*	**472439**
84552	*MCCOR*	6781
84553	*FITZ*	**472157**!
84553	*FITZ*	**472157**
84553	*MCCOR*	**470565**!
84554	*FITZ*	**473235**!
84554	*MCCOR*	350942
84555	*MCCOR*	**470530**!
84556	*FITZ*	410059
84556	*FITZ*	**470380**!
84556	*MCCOR*	**415449**!
84556S	*FITZ*	410059
84556S	*FITZ*	**470380**!
84557	*MCCOR*	**415449**!
84558	*MCCOR*	**473215**!
84562	*MCCOR*	**451078**!
84563	*FITZ*	6489
84563	*MCCOR*	41081S=
84565	*FITZ*	240151
84565	*MCCOR*	7600S
84567	*FITZ*	50199S!
84567	*FITZ*	6863S!
84567	*MCCOR*	6818
84569	*MCCOR*	**470898**!
8457	*C-R*	473414*
8457	*FULLE*	**418028**!
84572	*MCCOR*	**410708**
84573	*FITZ*	**471766**!
84573	*MCCOR*	450269
84574	*FITZ*	456618
84574	*MCCOR*	**415449**!
84575	*FITZ*	**415371**
84576	*FITZ*	**416865**!
84576	*MCCOR*	6922=
84577	*MCCOR*	6808N
84578	*FITZ*	**410737**!
84578	*MCCOR*	**473234**!
8458	*C-R*	473414*
84580	*FITZ*	**471862**
84581	*MCCOR*	**473467**!
84582	*MCCOR*	**416271**!
84583	*FITZ*	**412473**!
84583	*MCCOR*	**472354**!
84584	*FITZ*	**410737**!
84584	*MCCOR*	6590S
84585	*FITZ*	**417344**!
84586	*FITZ*	**330385**!
84587	*MCCOR*	**412040**
84589	*FITZ*	**473474**
84590	*FITZ*	**471504**!
84590S	*FITZ*	**471504**!
84591	*FITZ*	6547
84592	*MCCOR*	450104
84593	*MCCOR*	**450133**
84594	*MCCOR*	**474274**
84595	*FITZ*	**474264**
84595	*MCCOR*	**471271**!
84596	*FITZ*	6638S
84599	*FITZ*	**470954**!
846	*ROCKW*	370037A
846	*ROCKW*	370338A
84600	*MCCOR*	**450412**
84602	*FITZ*	**471267**!
84602	*MCCOR*	5589$
84603	*FITZ*	**472572**!
84604	*MCCOR*	6960
84605	*FITZ*	**472560N**
84605	*MCCOR*	40316S
84606	*FITZ*	240356

! Industrial Size/Type * Minor Width Difference $ F-M Number Is Part Of A Kit
= The U.S. customer service number is 877-4-TIMKEN. The Canadian customer service numbers are 800-565-4927 (English) and 800-565-0438 (French-Canadian).

Mfr. No.	Name	Zero Duplication or Recommended Industrial
84606	*MCCOR*	6985
84607	*FITZ*	**415284**
84607	*MCCOR*	41075S
84607S	*FITZ*	**415284**
84608	*FITZ*	6635S
84609	*MCCOR*	**414045**!
84609K	*FITZ*	5405
8460LPD	*JN-MN*	55199=
8460LUP	*JN-MN*	55199=
8461	*C-R*	473414*
84610	*FITZ*	340797
84610	*MCCOR*	**410496**!
84611	*FITZ*	340413
84611	*MCCOR*	**410496**!
84612	*FITZ*	**350936**
84612	*MCCOR*	**470334**!
84613	*FITZ*	**416130**!
84613	*MCCOR*	**473179**!
84614	*FITZ*	**415043**
84614	*MCCOR*	44053
84615	*FITZ*	417267
84615	*MCCOR*	**455434**
84616	*FITZ*	455024
84616	*MCCOR*	6954S
84617	*FITZ*	**455151**
84617	*MCCOR*	44052
84618	*FITZ*	455037
84618	*MCCOR*	**410737**!
84618S	*FITZ*	455037
84619	*FITZ*	370036A
84619	*MCCOR*	**470487**!
8461LPD	*JN-MN*	**470088**
8461LUP	*JN-MN*	**470088**
84620	*FITZ*	**473232**!
84621	*FITZ*	**470625**!
84621	*MCCOR*	**473228**
84622	*FITZ*	**471750**!
84622	*MCCOR*	3103!
84623	*FITZ*	**471619**!
84623	*MCCOR*	7107A=
84624	*FITZ*	**471553**!
84624	*MCCOR*	5126
84625	*MCCOR*	7216
846256	*WHITE*	**471870**!
846275	*WHITE*	100495
846275	*WHITE*	**417349**
84628	*MCCOR*	203006!
8462LPD	*JN-MN*	**472016**
8462LUP	*JN-MN*	**472016**
84630	*MCCOR*	7044NA
84631	*MCCOR*	**451143**
84632	*FITZ*	**471442**!
84632	*MCCOR*	7018N=
84633	*FITZ*	**471466**!
84633	*MCCOR*	**472397**!
84634	*FITZ*	**410694**!
84635	*FITZ*	**473228**
84635	*MCCOR*	**473466**
84636	*FITZ*	**472409**!
84636	*MCCOR*	**471138**!
84638	*FITZ*	**473214**
84639	*MCCOR*	50266
8463LPD	*JN-MN*	**471554**!
8463LUP	*JN-MN*	**471554**!
84640	*FITZ*	**472179**
84641	*FITZ*	**472185**!
84641	*MCCOR*	**473464**
84642	*FITZ*	483054N
84643	*FITZ*	**473232**
84643	*MCCOR*	**415449**!
84644	*FITZ*	**471765**!
84644	*MCCOR*	451469
84645	*FITZ*	**410102**
84645	*MCCOR*	**472185**!
84646	*MCCOR*	**473232**!
84646K	*FITZ*	5408
84647	*MCCOR*	**410987**!
84647	*MCCOR*	450686
84648	*FITZ*	6245S=
84648	*MCCOR*	**413246**
84649	*MCCOR*	7381S
8464G	*P-C*	TCS45483
8464LPD	*JN-MN*	**471570**!*
8464LUP	*JN-MN*	**471570**!
8465	*C-R*	473414
84650	*MCCOR*	**473243**
84651	*MCCOR*	**331107N**
84651H	*MCCOR*	**331107N**
84651K	*FITZ*	5406
84651N	*MCCOR*	**331107N**
84652	*FITZ*	6636S
84653	*MCCOR*	**415302**
84654	*FITZ*	**415138**!
84654	*MCCOR*	6180=
84655	*FITZ*	415060
84655	*FITZ*	455060
84656	*FITZ*	**415351**!
84656	*MCCOR*	45827S
84657	*FITZ*	**450666**
84658	*FITZ*	455251H
84658	*MCCOR*	**473452**
84659	*FITZ*	50560
8465LPD	*JN-MN*	**470590**
8465LUP	*JN-MN*	**470590**
84660	*FITZ*	**474272**!
84663	*FITZ*	**473473**
84664S	*FITZ*	**470898**
84665	*FITZ*	**471267**!
84665S	*FITZ*	**471267**!
84666	*FITZ*	**480630**!
84667	*FITZ*	**416921**!
84668	*FITZ*	**410987**!
84668	*MCCOR*	7457N
84669	*MCCOR*	442380
84670	*FITZ*	**417316**!
84670	*MCCOR*	**471341**!
84671	*FITZ*	**416288**!
84671	*MCCOR*	7107A=
84672	*MCCOR*	**413246**
846724	*GWI*	**470625**!
84672S	*FITZ*	350942
84673	*FITZ*	**415058**
84673	*MCCOR*	3095
84674	*FITZ*	**417351**!
84674	*MCCOR*	5113
84674	*MCCOR*	7721!
84675	*FITZ*	**417621**!
84675	*MCCOR*	5573
84676	*MCCOR*	**473235**
846765	*WHITE*	JV701
84676S	*FITZ*	**471344**
84677	*FITZ*	**471571**
84677	*MCCOR*	9150S
84678	*FITZ*	**415991**
84678	*FITZ*	455146!
84678	*MCCOR*	205044
84679	*FITZ*	**416271**!
84680	*FITZ*	**411376**!
84680	*MCCOR*	205015
84681	*FITZ*	**416892**
84681	*MCCOR*	**450639**
84682	*FITZ*	**416070**
84683	*FITZ*	**416664**!
84683	*MCCOR*	**413248**
84684	*FITZ*	**415991**
84684	*FITZ*	455146!
84684	*MCCOR*	340900
84685S	*FITZ*	**417506**
84686	*FITZ*	**417507**!
84686	*FITZ*	**417507**
84686	*MCCOR*	**471341**!
84687	*FITZ*	450482
84688	*FITZ*	**417484**!
84688	*MCCOR*	331301N
84689	*FITZ*	**410308**!
8468LUP	*JN-MN*	**410708***
84690	*FITZ*	200600
84690	*MCCOR*	5113
84690	*MCCOR*	7721!
84691	*FITZ*	**471646**!
84691	*MCCOR*	**415449**
84692	*FITZ*	450165
84692	*FITZ*	**471801**!
84693	*FITZ*	**471567**!
84694	*MCCOR*	**350936**
84695S	*FITZ*	9613S
84696	*FITZ*	**471821**!
84698	*MCCOR*	5589
84699	*FITZ*	**481073**
84699	*MCCOR*	**473473**
846D6	*WHITE*	**415697**!
846D6	*WHITE*	455547
847	*EATON*	370001A
847	*EATON*	380001A
84700	*FITZ*	**472179**
84700	*MCCOR*	**470898**
84701	*MCCOR*	**471271**!
84702	*FITZ*	6370N
84702	*MCCOR*	7751H
84703	*MCCOR*	**472016**
84704	*MCCOR*	8243
84705	*MCCOR*	8610
84706	*FITZ*	40973S
84706	*MCCOR*	331227H
84707	*MCCOR*	8168=
84708	*FITZ*	6643S
84708	*MCCOR*	**472070**
84709	*MCCOR*	9015S
8470LPD	*JN-MN*	**417484**!
8470LUP	*JN-MN*	**417484**!
84710	*FITZ*	6098=
84710	*MCCOR*	7044NA
84711	*CATER*	**471554**!
84713	*MCCOR*	6960
84714	*FITZ*	**412871**!
84714	*MCCOR*	**472082**
84715	*FITZ*	**417355**!
84715	*FITZ*	485497
84715	*MCCOR*	332062
84715S	*FITZ*	**417355**!
84715S	*FITZ*	485497
84716	*MCCOR*	8804S=
84716S	*FITZ*	**472164**
84717	*FITZ*	**474255**
84717	*MCCOR*	**472409**
84718	*FITZ*	**470712**!
84718	*MCCOR*	8610
84719	*FITZ*	**473227**
84719	*MCCOR*	8594S
8471A	*C-R*	**417316**!
84721	*MCCOR*	**470487**!
84722	*FITZ*	**472144**!
84722	*MCCOR*	**473179**
84723	*MCCOR*	**472082**
84724	*FITZ*	370002A
84725	*FITZ*	6532S=
84727	*FITZ*	**412920**!
84728	*FITZ*	**415035**!
84728	*FITZ*	**415035**
84730	*FITZ*	5951
84731	*FITZ*	240009
84732	*FITZ*	7107A=
84734	*FITZ*	**470605**!
84735	*FITZ*	**417223**
84736	*FITZ*	**473426**
84737	*FITZ*	**416125**!
84738	*FITZ*	**416888**!
84739	*FITZ*	**415995**!
84740	*FITZ*	**413247**!
847407	*GWI*	**476470**
847407	*GWI*	**476470**!
84741	*FITZ*	55030
84742	*FITZ*	**416345**!
84742	*FITZ*	455033
84743	*FITZ*	**415027**
84743	*FITZ*	**415027**!
84745	*FITZ*	**473016**!
84746	*FITZ*	240119
84747	*FITZ*	**471272**!
84748	*FITZ*	**417481**
84749	*FITZ*	6127
84750	*FITZ*	**471413**
84751	*FITZ*	**470530**!
84752	*FITZ*	45013S
84753	*FITZ*	**417343**!
84754	*FITZ*	**471649**!
84755	*FITZ*	**473449**
84756	*FITZ*	240319
84758	*FITZ*	45031S
84759	*FITZ*	**415036**
84760	*FITZ*	40085S
84761S	*FITZ*	**416271**!
84762	*FITZ*	**450039**
84763	*FITZ*	**471760**
84764	*FITZ*	**323138**!
84765	*FITZ*	**473010**
84767	*FITZ*	**417356**!
84767	*FITZ*	455188
84768	*FITZ*	5578
84769	*FITZ*	**471231**!
84770	*FITZ*	**481644**
84773	*FITZ*	**473234**!
84775	*FITZ*	455612=
84776	*FITZ*	**476470**
84777	*FITZ*	340771
84778	*FITZ*	**417349**
84779	*FITZ*	**471785**!
847799	*WHITE*	**415458**!
84780	*FITZ*	80313
84781	*FITZ*	**472397**!
84783	*FITZ*	6090S
84784	*FITZ*	450398
84784	*FITZ*	**471267**!
84786	*FITZ*	**470954**!
84787	*FITZ*	**471281**!
84788	*FITZ*	**450143**
84789	*FITZ*	6612S
847899	*GWI*	**473444**
8478LPD	*JN-MN*	**415284**
8478LUP	*JN-MN*	**415284**
84790	*FITZ*	**473231**!
84791	*FITZ*	**471413**!
84792	*FITZ*	**415187**
84793	*FITZ*	**416339**
84793	*FITZ*	455031!
84794	*FITZ*	**416332**!
84795	*FITZ*	**415991**
84795	*FITZ*	**415991**!

! Industrial Size/Type * Minor Width Difference

= The U.S. customer service number is 877-4-TIMKEN. The Canadian customer service numbers are 800-565-4927 (English) and 800-565-0438 (French-Canadian).

Mfr. No.	Name	Zero Duplication or Recommended Industrial
84796	*FITZ*	**471472**!
84797	*FITZ*	**471787**!
84798	*FITZ*	**416229**
847RC	*SUL*	**411253**!
848	*EATON*	**417505**
84803	*FITZ*	450269
84804	*FITZ*	**471526**!
84805	*FITZ*	**480630**
84806K	*FITZ*	5410
84807	*FITZ*	**350364**
84808S	*FITZ*	**471103**!
84809	*FITZ*	**450273**
84810S	*FITZ*	6626S
84811	*FITZ*	**472150**
84813	*FITZ*	**471763**
84814	*FITZ*	**417205**!
84815S	*FITZ*	**416297**
84816	*FITZ*	**472636**!
84817	*FITZ*	**472164**!
848178	*WHITE*	**480630**!
84819	*FITZ*	**473228**!
84820S	*FITZ*	**412473**!
848214	*WHITE*	**412943**
848225	*WHITE*	**417596**
84823S	*FITZ*	6754S=
84826S	*FITZ*	240470
84827S	*FITZ*	6760S
84828S	*FITZ*	6597S
84829S	*FITZ*	240736
84831K	*FITZ*	5452
84833	*CATER*	J1128
84834	*FITZ*	**417485**
84835S	*FITZ*	**470530**!
84836	*FITZ*	6781
84837S	*FITZ*	**415449**!
84838S	*FITZ*	**417134**
84839	*FITZ*	455614
848396	*WHITE*	**415449**!
8483LPD	*JN-MN*	**417181**!
8483LUP	*JN-MN*	**417181**!
8484	*C-R*	**473415**
84840	*FITZ*	**417269**!
84841	*FITZ*	415060
84841	*FITZ*	455060
84842	*FITZ*	**417353**!
84843	*FITZ*	455022
84844	*FITZ*	**415196**!
84846	*FITZ*	**415711**
84847	*FITZ*	**415394**
84848	*FITZ*	455625=
84849	*FITZ*	**455134**!
8485	*C-R*	**473415**
84850	*FITZ*	417537
84851	*FITZ*	**415350**
84852	*FITZ*	**417344**!
84853	*FITZ*	415064
84856	*FITZ*	**473234**!
8485LPD	*JN-MN*	**471649**!
8485LUP	*JN-MN*	**471649**!
84860	*FITZ*	6818
84862	*FITZ*	6815
848629	*WHITE*	**417621**!
84863	*FITZ*	**471795**
84864	*FITZ*	6840S
84865	*FITZ*	6985
84869S	*FITZ*	6855N=
84871	*FITZ*	**415960**!
84873S	*FITZ*	**473179**
84875	*FITZ*	41081S=
84877S	*FITZ*	**416271**!
84878S	*FITZ*	**451078**!
84879	*FITZ*	**410308**
8487M1	*C-R*	**416239**!
84881	*FITZ*	**473463**
84882K	*FITZ*	5458
848841	*WHITE*	**471554**!
84885S	*FITZ*	**470774**!
84886S	*FITZ*	6966S
84887S	*FITZ*	6241S
84888S	*FITZ*	7600S
848890	*WHITE*	**476838**!
84889S	*FITZ*	**471827**
84890S	*FITZ*	**470898**!
84891	*FITZ*	3103!
84892	*FITZ*	**415442**!
84892	*FITZ*	55442
84893	*FITZ*	55199=
84894	*FITZ*	**417350**!
84895	*FITZ*	6864S
84896	*FITZ*	6785
84897	*FITZ*	6930
84898	*FITZ*	9568
848984	*WHITE*	**417563**
84899	*FITZ*	6985
848BM7-Q6	*C-R*	**416239**!
849	*EATON*	370023A
84900S	*FITZ*	5589
84904	*FITZ*	340356
84906S	*FITZ*	**473234**!
84907S	*FITZ*	6952S=
84909	*FITZ*	**410987**=
84914	*FITZ*	**473228**
84916	*FITZ*	6960
84918	*FITZ*	205017
84919	*FITZ*	**473317**
84921S	*FITZ*	7686S
84922	*FITZ*	**470487**!
84923	*FITZ*	44053
84924	*FITZ*	6954S
84925S	*FITZ*	**473231**!
84927	*FITZ*	3103!
84927S	*FITZ*	**415449**
84928S	*FITZ*	**471195**!
84929S	*FITZ*	5072
8493052	*GMC*	**415984**!
84931	*FITZ*	7107A=
84932	*FITZ*	5126
84933	*FITZ*	7216
84935S	*FITZ*	321460
84936S	*FITZ*	203006!
84937	*FITZ*	5499=
84937K	*FITZ*	5499=
84938	*FITZ*	7044NA
84939	*AM WH*	470059
84939	*AM WH*	**470380**!
84939S	*FITZ*	5092
8493LPD	*JN-MN*	**471138**!
84940S	*FITZ*	**413246**
84941S	*FITZ*	3095
84942	*FITZ*	**410708**
84945S	*FITZ*	**473237**
84947S	*FITZ*	7456N
8494LPD	*JN-MN*	**471138**!
8494LUP	*JN-MN*	**471138**!
84950	*FITZ*	**451182**
849502	*WHITE*	**417171**!
849505	*WHITE*	5471
84958	*FITZ*	**410708**
8495LPD	*JN-MN*	**415254**
8495LUP	*JN-MN*	**415254**
8496	*C-R*	482069N
84968	*FITZ*	205044
8496LPD	*JN-MN*	**410496**!
8496LUP	*JN-MN*	**410496**!
84971S	*FITZ*	7338N
84972S	*FITZ*	**415449**
84974S	*FITZ*	**350936**
84975	*FITZ*	**350936**
84975S	*FITZ*	**350936**
84976S	*FITZ*	**474260**
84979S	*FITZ*	**472354**!
8497LPD	*JN-MN*	**455655**!*
8497LUP	*JN-MN*	**455655**!
84980	*FITZ*	7934S
84982S	*FITZ*	331301N
84984	*FITZ*	**470712**
84985	*FITZ*	**455189**
84986S	*FITZ*	**471821**!
84987	*FITZ*	7607
84988	*FITZ*	5113
84988	*FITZ*	7721!
84989S	*FITZ*	203008
84990S	*FITZ*	**470898**!
84992	*FITZ*	**416273**!
849935	*WHITE*	**417262**!
84993S	*FITZ*	6241S
84994S	*FITZ*	7886S
84995	*FITZ*	41257!
84997	*FITZ*	7994S
84998S	*FITZ*	9150S
84999	*FITZ*	8139
84G15	*OSHKO*	**416288**!
84GT7A248A3A	*FORD*	2658
84GX15	*OSHKO*	**416288**!
850	*EATON*	370036A
850	*EATON*	370349A
85000	*FITZ*	291295
8500058	*CYCLO*	**474274**=
8500058	*GR-DV*	**474274**=
8500059	*CYCLO*	**410825**
8500060	*CYCLO*	**416273**
8500061	*CYCLO*	**470898**
8500062	*CYCLO*	**473474**
8500063	*CYCLO*	**415483**
8500064	*CYCLO*	**417349**
8500065	*CYCLO*	**416332**!
8500066	*CYCLO*	411160N=
8500068	*CYCLO*	**476470**
8500068	*CYCLO*	**476470**!
8500072	*CYCLO*	**471651**=
8500078	*CYCLO*	**470954**!
8500079	*CYCLO*	**471224**!
85002S	*FITZ*	**471827**
85003S	*FITZ*	**482253**
85005	*C-R*	**417603**!
850050	*CLARK*	**471567**!
85006	*C-R*	**417603**!
850078	*CYCLO*	**470954**!
85009	*C-R*	**417603**!
850105	*CLARK*	**412473**!
850109M1	*MASSE*	**470712**!
85011S	*FITZ*	5337
85012	*C-R*	**417603**=
8501238	*CYCLO*	**471413**!
8501239	*CYCLO*	**471571**
8501240	*CYCLO*	**473231**!
8501240	*GR-DV*	**473231**=
8501241	*CYCLO*	**472397**!
85012S	*FITZ*	5092
85013S	*FITZ*	**472082**
85014	*C-R*	**417604**
85015	*C-R*	**417604**
85015S	*FITZ*	332062
85016S	*FITZ*	8804S=
85017S	*CLARK*	**450446**
85017S	*FITZ*	9613S
850185M1	*MASSE*	**472015**!
850189	*GWI*	**415351**!
8501LPD	*JN-MN*	**417198***
8501LUP	*JN-MN*	**417198**
85020	*C-R*	**417604**
85021	*C-R*	**417604***
850225M1	*MASSE*	**471785**!
850234	*GWI*	**415960**!
850237C92	*IH*	**473367**
850237C92	*IH*	**473367**!
850238C92	*IH*	**473445**=
85029S	*FITZ*	5111
85029S	*FITZ*	5111S
8502A	*C-R*	**473447**
8502LPD	*JN-MN*	55030*
8502LUP	*JN-MN*	55030
85030S	*FITZ*	**472082**
850315	*GWI*	**417205**!
850316	*GWI*	**417247**!
850333M1	*MASSE*	200354
8503LPD	*JN-MN*	**415263**
8503LUP	*JN-MN*	**415263**
85040S	*FITZ*	5111
85040S	*FITZ*	5111S
85048S	*FITZ*	3945
8504LPD	*JN-MN*	**417506**
8504LUP	*JN-MN*	**417506**
8505	*C-R*	22X31X6
85050S	*FITZ*	5390
85051S	*FITZ*	**415483**
850567	*CLARK*	50199S!
850567	*CLARK*	6863S!
85059S	*FITZ*	5112
85059S	*FITZ*	5112S
8505LPD	*JN-MN*	**415007***
8505LUP	*JN-MN*	**415007**
85063S	*FITZ*	5112
85063S	*FITZ*	5112S
8506LPD	*JN-MN*	**417488**!
8506LUP	*JN-MN*	**417488**!
8507	*C-R*	**416239**!
8507	*CABOT*	**416239**!
8507	*MINMA*	**416239**!
85070	*C-R*	**417604**
85071	*C-R*	**417604**
850716	*C-R*	**415867**
85079	*AM WH*	**473245**!
8507LPD	*JN-MN*	**417488**!
8507LUP	*JN-MN*	**417488**!
8507M1	*C-R*	**416239**!
8508	*C-R*	22X31X8!*
8508	*C-R*	22X32X7V!
85080	*C-R*	**417604***
85081044	*WARNE*	**473245**!
850812	*CLARK*	**473467**!
85085	*C-R*	**416394**
8508LPD	*JN-MN*	455820
8508LUP	*JN-MN*	455820
85090	*C-R*	**416394**
8509LPD	*JN-MN*	**417172***
8509LUP	*JN-MN*	**417172**
851	*EATON*	370065A
8510	*C-R*	222210
8510	*C-R*	22X32X7!
8510	*JAC*	**470954**!
8510LUP	*JN-MN*	473453
8511513C	*HARWA*	85X115X13
8513	*C-R*	22X35X7*
851350M1	*MASSE*	40401
85137	*NATL*	7208S
8515	*C-R*	22X35X7
851522	*WHITE*	**472560N**!
8516	*C-R*	222220

! Industrial Size/Type * Minor Width Difference

= The U.S. customer service number is 877-4-TIMKEN. The Canadian customer service numbers are 800-565-4927 (English) and 800-565-0438 (French-Canadian).

Mfr. No.	Name	Zero Duplication or Recommended Industrial
8516	C-R	22X35X7!
8516	C-R	22X35X7V!
851634	WHITE	**416654**
85165	GWI	**473462**
8517	C-R	22X35X7
85174	MCCOR	**470354**
851771	WHITE	**471231**!
8517A	C-R	**415960**!
85181S	FITZ	472341!
85182S	FITZ	3698
85182S	FITZ	5092
8519	C-R	222210
85191A	C-R	**471413**
85195S	FITZ	5576
85196S	FITZ	5414
85197S	FITZ	5115
85199S	FITZ	**473573**
8519H	SPG	**473179**
852	EATON	**415058**
8520	C-R	22X36X7
85200S	FITZ	3394
85201S	FITZ	473560N
85202S	FITZ	3103!
85203S	FITZ	2955
85204S	FITZ	3095
852052	WHITE	**471224**!
85205S	FITZ	5108
852084	WHITE	450073
852172	GWI	**472157**!
852172	GWI	**472157**
8522	C-R	222220
85221	AM WH	**471646**!
852482	WHITE	50199S!
852482	WHITE	6863S!
8527160	FAIRB	**471571**
852722	WHITE	**417254**
852723	WHITE	JV701
85274	HOUGH	**412119**!
853	EATON	370037A
853	EATON	370338A
8530	C-R	22X37X7
85305	WITTE	**472012**
853090	WHITE	**471442**!
853170	FIAT	224040
853170	FIAT	40X60X10!
8532S	SPG	370048A
853391	CLARK	**474278**!
85358A	HYST	5593=
853716	CLARK	**450173**
85375	EATON	924057
853D6	DIA	**455858**
853D6	WHITE	**455858**
854	EATON	370019A
8540	C-R	22X38X7!
8540	C-R	22X38X8
85404	NATL	200642
854090	WHITE	**415437**
854091	WHITE	**416339**
854091	WHITE	455031!
8541	C-R	22X38X7V
854276	WHITE	**472179**
8542A	C-R	**471649**!
8545	C-R	222238
8545	C-R	22X38X8!
85452	GRAM	**471827**
854580	GWI	**472157**
854580	GWI	**472157**!
854581	GWI	**416657**
854761	CLARK	**470354**
8548895	RENAU	35X50X8!
8548895	RENAU	3771
8548983	RENAU	35X50X8!
8548983	RENAU	3771
854945	WHITE	**415960**
854D1	DIA	450073
854D1	WHITE	450073
855	EATON	370124A
8550	C-R	222240
8550	C-R	22X40X7!
855021003	BU-SP	**471267**!
855022000	BU-SP	**471192**
855022001	BU-SP	**470625**!
8550220010	BU-SP	**472394**
8550220011	BU-SP	**471224**!
8550220012	BU-SP	**472144**!
855022002	BU-SP	**473228**
855022004	BU-SP	**472439**
855022005	BU-SP	**473197**
855022007	BU-SP	**471766**!
855022008	BU-SP	**471192**
855022009	BU-SP	**472185**!
855022010	BU-SP	**472394**
855022011	BU-SP	**471224**!
855022012	BU-SP	**472144**!
855022013	BU-SP	**471652**
855022013	BU-SP	482208!
855022014	BU-SP	**471766**!
855022015	BU-SP	**470625**!
855022016	BU-SP	**471224**!
855022017	BU-SP	**471192**
855022018	BU-SP	**472394**
855022019	BU-SP	7216
855022020	BU-SP	5711
855022021	BU-SP	**473238**
855022022	BU-SP	**472164**!
855022023	BU-SP	**473228**
855022024	BU-SP	**472439**
855022025	BU-SP	**471141**!
855022026	BU-SP	**472144**!
855022027	BU-SP	**451817**
855022028	BU-SP	**470625**!
855022029	BU-SP	**470625**!
855022030	BU-SP	**473228**
855022031	BU-SP	**473445**
855022032	BU-SP	**470682**
855022033	BU-SP	**471750**!
855022034	BU-SP	**473452**
855022035	BU-SP	**471141**!
855022036	BU-SP	**472185**!
855022038	BU-SP	**471984**
855022039	BU-SP	5778
855022040	BU-SP	**471192**
855022041	BU-SP	**470625**!
855023000	BU-SP	**472636**!
855023001	BU-SP	**411394**!
855023002	BU-SP	**417316**!
855023003	BU-SP	**473466**
855023004	BU-SP	**415007**
855023005	BU-SP	**470898**
855023007	BU-SP	**455005**
855023008	BU-SP	**471341**!
855023009	BU-SP	**470530**!
855023011	BU-SP	**417485**
855023012	BU-SP	**473464**
855023013	BU-SP	**415007**
855023014	BU-SP	**473466**
855023015	BU-SP	**417316**!
855023016	BU-SP	**472636**!
855023017	BU-SP	**415303**!
855023018	BU-SP	**412861**
855023019	BU-SP	**472636**!
855023021	BU-SP	**415449**!
855023022	BU-SP	**411394**!
855023022	KOEH	**411394**!
855023023	BU-SP	**473467**!
855023024	BU-SP	**415449**!
855023025	BU-SP	**417486**
855023026	BU-SP	**472924**!
855023027	BU-SP	**412119**!
855023028	BU-SP	**473473**
855023029	BU-SP	55469
855023030	BU-SP	**471271**!
855023031	BU-SP	**470530**!
855023033	BU-SP	**415302**
855023034	BU-SP	**473471**
855023035	BU-SP	**417484**!
855023036	BU-SP	**415001**!
855023037	BU-SP	**417344**!
855023038	BU-SP	**411348**!
855023039	BU-SP	**415483**!
855023040	BU-SP	**416271**!
855023041	BU-SP	**472492**!
855023042	BU-SP	**472397**!
855023043	BU-SP	**417480**!
855023044	BU-SP	40401
855023045	BU-SP	**473467**!
855023046	BU-SP	**472409**!
855024000	BU-SP	55309=
855024001	BU-SP	**415991**
855024002	BU-SP	**415991**
855024002	BU-SP	455146!
855024003	BU-SP	**415991**
855024004	BU-SP	**415995**!
855024005	BU-SP	**415379**
855024006	BU-SP	**415379**
855024006	BU-SP	**415379**!
855024008	BU-SP	**415379**
855024009	BU-SP	**415995**!
855024010	BU-SP	**476470**
855024011	BU-SP	**412473**!
855024013	BU-SP	**415937**!
855024014	BU-SP	**417351**!
855024015	BU-SP	**456105**
855024016	BU-SP	**418028**
855024016	BU-SP	455137!
855024017	BU-SP	**417349**
855024018	BU-SP	**416624**!
855024019	BU-SP	7208S
855024021	BU-SP	455178=
855024022	BU-SP	**417598**
855024023	BU-SP	**415995**!
855024024	BU-SP	**415559**
855024025	BU-SP	**415379**!
855024025	BU-SP	**415379**
855024026	BU-SP	**417191**
855024026	BU-SP	455165!
855024027	BU-SP	**417621**!
855024029	BU-SP	**476470**
855024030	BU-SP	**417210**!
855024031	BU-SP	**416125**!
855025000	BU-SP	**415138**!
855025001	BU-SP	**416888**!
855025003	BU-SP	**415196**!
855025006	BU-SP	415064
855025007	BU-SP	**472157**
855025007	BU-SP	**472157**!
855025008	BU-SP	**416892**!
855025009	BU-SP	455197N
855026000	BU-SP	**417254**
855026001	BU-SP	**415725**!
855026002	BU-SP	**415645**!
855026002	BU-SP	455104
855026003	BU-SP	**416865**!
855026004	BU-SP	**415645**!
855026004	BU-SP	455104
855026005	BU-SP	**415938**
855026006	BU-SP	**416107**!
855026006	BU-SP	455073
855026007	BU-SP	**416107**!
855026010	BU-SP	**416107**!
855026011	BU-SP	**417556**
855026012	BU-SP	**416666**
855027000	BU-SP	**417298**
855027001	BU-SP	55692=
855027002	BU-SP	**417562**
855027003	BU-SP	**415072**
855027004	BU-SP	**417596**
855028000	BU-SP	**415867**
855028001	BU-SP	**415867**
855028002	BU-SP	**415116**
855028003	BU-SP	**415867**
855028004	BU-SP	**455406**!
855028005	BU-SP	**415551**
855028006	BU-SP	**415551**
855028007	BU-SP	**415867**
855028008	BU-SP	**415867**
855028009	BU-SP	**416239**!
855028010	BU-SP	**416239**!
855029001	BU-SP	**415128**
855029003	BU-SP	55222=
855029005	BU-SP	**415482**
855029006	BU-SP	55222=
855029007	BU-SP	**415482**
855029011	BU-SP	**455462**
855029013	BU-SP	**415482**
855029014	BU-SP	**55301S**
855048	WHITE	**473467**!
855049	WHITE	**471192**
855054	WHITE	**411245**!
8551	C-R	22X40X7
8552	C-R	22X40X7V
855488	CLARK	450269
8555	C-R	22X42X10
8556	C-R	22X42X10
855657	CLARK	**471570**!
85571	WAUKE	**473205**
8558	C-R	222240
8558	C-R	22X40X7V!
856	EATON	**416892**
8560	C-R	22X45X7
8561	C-R	222267
8562	C-R	22X42X10
856227	CHRYS	**471316**
8563	C-R	22X45X7
85641	WAUKE	**330385**!
856798	GWI	**416892**!
8568	C-R	22X47X7
856811	WHITE	**416404**!
856821	WHITE	**471224**!
857	EATON	370131A
8570	C-R	222270
8570	C-R	22X47X7!
857031	CLARK	**480630**!
857112	CLARK	**416158**
8573	C-R	22X47X7
857317	CLARK	**471765**!
85778	CUMMI	**472164**!
85778	OLIVE	**472185**!
857824	WHITE	370006A
85785	CUMMI	**472409**!
85785	OLIVE	**472409**!
8579	FULLE	**472319**
858	EATON	370021A
8580	C-R	22X50X8
85805	GRAM	**473467**
8581A	C-R	**472636**!
858286	CLARK	**471442**!
8583	FULLE	**473231**!

! Industrial Size/Type

= The U.S. customer service number is 877-4-TIMKEN. The Canadian customer service numbers are 800-565-4927 (English) and 800-565-0438 (French-Canadian).

Mfr. No.	Name	Zero Duplication or Recommended Industrial
858345	WHITE	370023A
858358	WHITE	370036A
858358	WHITE	370349A
858366	WHITE	HU019A
858367	WHITE	730009
858368	WHITE	AR10+370020A
858370	WHITE	HU019A
858371	WHITE	730009
858372	WHITE	AR10+370020A
858375	WHITE	370023A
858379	WHITE	HU013A
858380	WHITE	733067
858381	WHITE	HU024A
858382	WHITE	730004
858383	WHITE	370001A
858386	WHITE	730016
858387	WHITE	HU042A
858388	WHITE	730016
858389	WHITE	HU036A
858390	WHITE	730003
8583AB	CASE	**415458**!
858402	WHITE	730010
85854	WAUKE	**352541**
8587	CHERY	**416107**!
8587	CHERY	455073
858701	CLARK	**450188**
85884	WHELA	**415645**!
85884	WHELA	455104
858848	WHITE	5494
858849	WHITE	370007A
858849	WHITE	7866S
858872	WHITE	**471413**
859	EATON	386025A
859	EATON	**416158**
859056	WHITE	**415960**
859059	WHITE	**455032**!
859060	WHITE	**416892**!
859063	WHITE	**417172**
859064	WHITE	**415437**
859064	WHITE	**415437**!
859164	CHRYS	6241S
85927R91	IH	340413
85928R91	IH	240414
859393	GWI	**472164**!
85964	EATON	904087
85965	EATON	904072
859984	WHITE	370001A
859985	WHITE	370001A
859995	WHITE	730001
859997	WHITE	730027
859998	WHITE	730008
859999	WHITE	730017
859D6	WHITE	456618
85X105X10SC	TRSCM	85X105X10!
85X105X10TC	TRSCM	85X105X10!
85X105X13SC	TRSCM	85X105X13
85X105X13TC	TRSCM	85X105X13
85X110X10	ISP	85X110X10
85X110X12SC	TRSCM	85X110X12
85X110X12TC	TRSCM	85X110X12
85X115X13	SIMRT	85X115X13
85X115X13AN	ISP	85X115X13
85X120X12SC	TRSCM	85X120X12
85X120X12TC	TRSCM	85X120X12
85X130X13SC	TRSCM	85X130X13
85X130X13TC	TRSCM	85X130X13
86-374A	BUC-E	**416077**
860	EATON	370005A
86000	FITZ	**415437**
86001	FITZ	7208S
860022	WHITE	**474278**!
86003	FITZ	**415437**
86003	FITZ	**415437**!
86004	FITZ	**416125**!
86006	FITZ	415137!
86006	FITZ	**418028**
86009	FITZ	6077
8601-4686	MERCE	717005
86010	FITZ	45637S
86011	FITZ	**415025**
86012	EATON	927112
86013	EATON	927113
8601478	GMC	**412871**!
860264R91	IH	40566S
860313R91	IH	40566S
8603362	GMC	**471442**!
860419	WHITE	**415995**!
8604M	BRAD	**472164**!
86055	C-R	J1112
860594	WHITE	**416956**
860594A3	DIA	**416956**
8606M	BRAD	**471466**!
86081	C-R	JV1210=
861	EATON	370003A
86105	PUL	HU013A
86106	PUL	HU009A
8610R	SPG	718610
8610RAR	SPG	718610
8612	C-R	340850
8612229	GMC	9613S
8612234	GMC	450285
8613	HYST	**471255**!
8614102	GMC	**473234**
861484	CLARK	**415196**!
8615094	GMC	**473234**
861513650	SOLAR	**471647**
861546	WHITE	370023A
861546	WHITE	6864S
8615885	GMC	**417158**!
8616280	GM	411
8616588	GMC	**473234**!
8617869	GMC	**473234**
8618478	GMC	7018N=
8618479	GMC	7018N=
8618697	GMC	450725N=
8618702	GMC	**473234**
8618702	WILYS	**473234**
8619560	GMC	7442H
8619867	GMC	342805
8620	C-R	240733
862051	WHITE	40094S
862052	WHITE	40097S
86208C	DIA	6635S
8621	HYST	**472397**!
86213	AT SU	292594
8621767	GMC	342805
8622268	GMC	7442H
862283	WHITE	**470565**!
8623056	GMC	8792S
8623743	GMC	9449
8623789	GMC	**473179**
8623789	WILYS	**473179**
8624	C-R	**254287**!
8624117	AMC	**411500**
8624117	GMC	**411500**
8624117	WILYS	**411500**
8625	C-R	5976S
8625	CHERY	**417967**!
862500	WHITE	HU009A
862501	WHITE	733067
8625571	GMC	**473179**
862570	WHITE	**415458**!
862571	WHITE	**473447**
8625757	GMC	9449
8625892	GMC	**473234**
8625893	GMC	5208
8625893	GMC	9449$
86260	C-R	**417567***
8626009	GMC	5208
8626009	GMC	9449$
8626901	GMC	5208
8626912	AMC	**473179**
8626916	GMC	**473179**
8627	C-R	**254287**!
8627	C-R	7840S
8627145	GMC	2457
8628054	GMC	3227
8629	C-R	7014S
8629	STN-S	**471766**!
8629A	C-R	**417159**
8630	STN-S	**473228**
8630921	GMC	3227
8631156	GMC	3543
8631158	GMC	3583
863154	CLARK	**473467**!
8631590	GMC	240385
8631950	GMC	3583
8631950	GMC	4072N
8632	C-R	7014S
8633	C-R	**254287**
863490	WHITE	**455480**!
8636A	C-R	470050
8637	C-R	340413
86374	C-R	**416077**
86374	GR-DV	**416077**
86374M1	C-R	**416077**
8637569	GMC	340849
863767	WHITE	730010
8637906	GMC	4072N
8638	HYST	**471567**!
8639	HYST	**471570**!
863916	WHITE	**474276**
864	CEW	224220
864	CEW	42X56X7!
864	CEW	494117
8640345	GMC	**473179**
8641	C-R	340413
8641300	GMC	**473179**
8641826	GMC	**473179**
8641878	GMC	**473179**
8641904	GMC	**473179**
8641952	GMC	**473179**
864317	WHITE	**410825**
864319	GWI	**472144**!
864321	GWI	**415007**
864324	GWI	**416865**!
8643792	GMC	4072N
8643931	GMC	5690
8643935	GMC	3459
8644	C-R	353132
864403	WHITE	476574N
8644637	GMC	4150N
8644637	GMC	710096
8644709	GMC	8792S
8645	C-R	340413
8645003	GMC	340847
864530R91	IH	**471442**!
8646	C-R	**471267**!
864643-C92	IH	370023A
864743-C92	IH	370023A
864784-C91	IH	370023A
8648	C-R	**471267**
8648394	GMC	3227
8649	C-R	353132
86496	GRAM	**472409**!
8650	C-R	**471267**!
86504R91	IH	**455008**
865070R91	IH	**411348**!
8651	C-R	**471267**!
8652	C-R	**471267**!
8653	C-R	**471267**!
8654	C-R	**471267**!
8654491	GMC	3227
8655031	GMC	9449
8655032	GMC	2457
8655122	GMC	**473179**
8657	C-R	**471267**!
8657163	GMC	8792S
8658	C-R	**471267**!
8659	C-R	**471267**!
8660	C-R	**471267**
8661	C-R	**471267**!
86614	C-R	220X250X15V
86615	C-R	220X250X15
8661602	GMC	4598
8662	C-R	**471267**!*
8662A	C-R	**473367**
8663	C-R	**471267**!*
8664	C-R	**471267**!
8664812	GMC	4072N
8665	C-R	**471267**
8665542	GMC	8611N
86657J	DIA	**417344**!
8666007	GMC	3543
8667	C-R	**471267**!
86684M	DIA	**416654**!
86689M	IH	**470712**!
86690	IH	**472185**!
866964	BENDI	200642
867	HOLT	6701=
8670	C-R	**471267**!
86702	HOUGH	**417269**!
8670218	HOUGH	**417269**!
8670218	IH	**417269**!
8670283	GMC	**473179**
8671	C-R	**471267**!*
867167	CLARK	**471442**!
8672	C-R	**471267**!*
867205	CLARK	**416271**!
867279	WHITE	**470954**!
867285	WHITE	**471570**!
8673	C-R	**471267**!
867335	WHITE	**417433**
8673526	GMC	4583
867367	WHITE	**416364**!
867385	WHITE	**415458**!
867385A	DIA	**415458**!
8674	C-R	**471267**!
8675730	GMC	9449
8675731	GMC	2457
8676	C-R	**471267**!
867633	CLARK	55358=
8677	C-R	440131!
867703	WHITE	**415988**
8677463	GMC	4333N
8677554	GMC	4674N
8677749	GMC	224840
8678	C-R	**471267**!
86783	WHITE	**471689**!
867887R91	IH	**471466**!
867888R91	IH	**473229**
8679	C-R	**471267**!
8679679	GMC	714679
8679744	GMC	710096
8680	C-R	**471267**!
8680	CHERY	**471192**
8680134	KOEH	**472179**
8680152	KOEH	**471808**!

! Industrial Size/Type * Minor Width Difference $ F-M Number Is Part Of A Kit
= The U.S. customer service number is 877-4-TIMKEN. The Canadian customer service numbers are 800-565-4927 (English) and 800-565-0438 (French-Canadian).

Mfr. No.	Name	Zero Duplication or Recommended Industrial
8680153	KOEH	471763
8680309	KOEH	470898
8680322	KOEH	471271!
8680518	KOEH	417191
8680541	GMC	4072N
868137R91	IH	7013S
868137R92	IH	7013S
8682	C-R	471267!
868251	WHITE	6886S
868276	WHITE	416921!
868287	CLARK	473467!
8683	C-R	471267!
8684	C-R	471267!
8685	C-R	471267!
8685111	GMC	224840
8685515	GMC	4072N
8686	PUL	B300
8686903	CONTI	472843
868695R91	IH	451948
868860R92	IH	HU024A
868861R1	IH	730004
8690	C-R	712270
8691	C-R	712270
8691260	ACF	415035
8691260	ACF	415035!
8691268	ACF	471271!
869235	WHITE	416297
869264	WHITE	410308
869550	IH	417356!
869550	IH	455188
8696	C-R	471570!*
86960	GRAM	50402
86964	WHITE	410308
8697	C-R	471570!
86978	GRAM	471224!
86HM6700A6A	FORD	3774
86HM6701A1A	FORD	473573
86SM6700A6A	FORD	3771
86SM6701A6A	FORD	3772
86TM6701A1A	FORD	473573
8700	C-R	471570!
870061	WHITE	470954
870080	WHITE	470954!
8702	C-R	471570!
870217	WHITE	471737
870224	WHITE	471795
870224B1	DIA	471795
870224D1	DIA	471795
8703	C-R	471570*
870349	WHITE	473179
8704	C-R	471570
870453	WHITE	471224!
870485C91	IH	370030A
8705	C-R	471570!*
87055S94	FORD	421
8706	C-R	471570!*
87061S94	FORD	427RR
8707	C-R	471570
87074	AMC	470530!
8708	C-R	471570!
870889C91	IH	370048A
870890C91	IH	370048A
8709	C-R	471570!
8710	C-R	471570!*
8711	C-R	471570!
8711329	CHRYS	340771
8712	C-R	471570!
871239R91	IH	471787
871240R91	IH	471787
871275	WHITE	471192
871281R91	IH	40576S
871303R91	IH	472560N
8714	C-R	472810!
871425	WHITE	416500
871425A	WHITE	416500
871425D5	DIA	416500=
8715	C-R	471570!
871601085	SOLAR	450398
871601085	SOLAR	471267!
871699004	SOLAR	470380!
871699046	SOLAR	471407
871699047	SOLAR	471413!
871699052	SOLAR	471619!
871699156	SOLAR	474274
871699330	SOLAR	471643!
871699348	SOLAR	471571
8717	C-R	471570!
87181	AM WH	412119!
8719	C-R	471570!
871951	WHITE	200642
87199	AM WH	455026
8720	C-R	471570!
8720035	BOWEN	415645!
8720035	BOWEN	455104
8720316	GMC	340823
8721	C-R	471570!
872164	WHITE	471224!
8722125045	HUB-C	471516!
8724S	SPG	7131
8725	C-R	471570!
8727	C-R	471570!
872797	WHITE	415854
872927	CLARK	474272!
872E-10	CLARK	473473
8731	HYST	473232
873157R91	IH	471341!
873158R91	IH	471341!
873190	WHITE	417316!
873190A	WHITE	417316!
873448	WHITE	417570
87355	HYST	415995!
87355	HYST	415995!
873637	FIAT	223535
87365	GRAM	473463
87378	HYST	416229
87379	HYST	473367
873793	WHITE	471224!
87380	HYST	473232!
87381	HYST	472394
87382	HYST	416404!
873837	WHITE	413248
8741	C-R	471570!
8741	HYST	470380!
8741225028	HUB-C	471224!
8741225036	HUB-C	471224!
8742125009	HUB-C	472164!
8742125026	HUB-C	473197
8742125027	HUB-C	470390
8742125045	HUB-C	471516!
8745	C-R	471570!
87467	BENDI	240816
874768	BENDI	340797
8748	C-R	471570!
8748	HYST	471264!
87480	C-R	486642*=
8748919	WILYS	471224!
8749999008	HUB-C	J1103
875	UNIVE	350435*
8752	DICO	203013
875242	WHITE	415458!
87535	C-R	415128
875380	C-R	455966
87540	C-R	415128
87541	C-R	415128*
87550	C-R	415128
87551	C-R	415128*
875560	CLARK	470059
875560	CLARK	470380!
8757	C-R	417564
87578	C-R	415116
87578M1	C-R	415116
876	NATL	G753
8760A	C-R	471224!
876235R91	IH	416130!
8763	C-R	350877
8763	C-R	471633
8764886	CONTI	474255
8764948	CONTI	7234=
8764A	C-R	410496!
8765	C-R	471633!*
876506R91	IH	471538!
87656	HYST	415449!
8766	C-R	471633!
876750	WHITE	100495
876750	WHITE	417349
8772	C-R	471633!
8773	C-R	471646!
8774	C-R	471646!
8777	NATL	9569S
8777	SPG	9569S
8779	C-R	471646!
87795	CROWN	471554!
8780	C-R	471646!
8780	HYST	416288!
87804	HYST	7042S
878155	WHITE	471553!
878163	WHITE	471765!
8782	C-R	471646!
878346	WHITE	476470
878349	WHITE	415991
878349	WHITE	415991!
8784	C-R	471646!
8785	C-R	471646!
8785A	F-R-H	416921!
8786A	F-R-H	415138!
8787	C-R	471646!
8787A	F-R-H	416888!
8788A	F-R-H	417563
8789A	F-R-H	416666
879573	WHITE	471141!
879579	WHITE	471466!
8796	C-R	471646!
8797	C-R	471646!
879981	BENDI	350909
879981	BENDI	471224!
88000	MCCOR	471413
88001	MCCOR	417073
88002	MCCOR	415001!
88011	MCCOR	5797
88017	MCCOR	455336
8801LPD	JN-MN	417539!*
8801LUP	JN-MN	417539!
8802	C-R	240215
88023	MCCOR	455310
88025	MCCOR	5965
88026	MCCOR	418028
88026	MCCOR	455137!
88028	MCCOR	415137!
88028	MCCOR	418028
88029	MCCOR	416288!
88035	HYST	470954!
88045	MCCOR	475348N
88046	MCCOR	417487!
88046	MCCOR	417487
88047	MCCOR	417171!
88049	MCCOR	417621!
88049S	MCCOR	417621!
8804LPD	JN-MN	455480!*
8804LUP	JN-MN	455480!
88055	MCCOR	417181!
8806	C-R	471646!
880620C91	IH	417269!
88068	MCCOR	415988
88068S	MCCOR	415988
88070	MCCOR	415254
88072	MCCOR	455008
88076	MCCOR	415007
88079	MCCOR	415960
88083	MCCOR	455280
88084	MCCOR	416654!
88085	MCCOR	455151
88088	MCCOR	415995!
8808LPD	JN-MN	417513
8808LUP	JN-MN	417513
88090	MCCOR	5921
88092	MCCOR	417316!
88093	MCCOR	417484!
88093S	MCCOR	417484!
88094	MCCOR	417344!
88095	MCCOR	417159
88096	MCCOR	417159
88097	MCCOR	415458!
8809LPD	JN-MN	415045!
8809LUP	JN-MN	415045!
88101	MCCOR	455151
88102	MCCOR	416654
88103	MCCOR	416273!
88104	MCCOR	417485
88105	MCCOR	415458!
88107	MCCOR	415001!
8810LPD	JN-MN	416137*
8810LUP	JN-MN	416137
8811010A	HARWA	88X110X12
88111	MCCOR	3210
88115	MCCOR	5971
88117	MCCOR	415899N
88117	MCCOR	416624
88118	MCCOR	6074
8811LPD	JN-MN	415064
8811LUP	JN-MN	415064
88121	MCCOR	417344!
88122	MCCOR	415960
88122S	MCCOR	415960!
88123	MCCOR	415995!
88126	MCCOR	417351!
88128	MCCOR	417492
88129	MCCOR	417316!
88130	MCCOR	415960
88133	MCCOR	45013S
88135	MCCOR	474272
88136	MCCOR	455005
88137	MCCOR	417344!
88137S	MCCOR	417344!
88138	MCCOR	455008
88139	MCCOR	416921!
88140	MCCOR	417487
88141	MCCOR	455015
88142	MCCOR	456105
88143	MCCOR	415085!
88143	MCCOR	456648
88144	MCCOR	417487
88145	MCCOR	416282
88146	MCCOR	417172
881467	WHITE	412027
88147	MCCOR	415991
88147	MCCOR	455146!
88148	MCCOR	417134
88149	MCCOR	417351!

! Industrial Size/Type * Minor Width Difference

= The U.S. customer service number is 877-4-TIMKEN. The Canadian customer service numbers are 800-565-4927 (English) and 800-565-0438 (French-Canadian).

Mfr. No.	Name	Zero Duplication or Recommended Industrial
881499	WHITE	415938
8814LPD	JN-MN	471649!
8814LUP	JN-MN	471649!
88150	MCCOR	55155=
88151	MCCOR	417488!
88152	MCCOR	412473!
88153	MCCOR	417492
88154	MCCOR	417481
88155	MCCOR	412861
88156	MCCOR	455253
88157	MCCOR	415259!
88158	MCCOR	455260
88159	MCCOR	417349
8815LUP	JN-MN	473233!
88160	MCCOR	417082
88161	MCCOR	415991
88161	MCCOR	455146!
88162	MCCOR	415984!
88163	MCCOR	417191
88163	MCCOR	456585
88164	MCCOR	55337
88165	MCCOR	415991
88165	MCCOR	455146!
88166	C-P	471466
88166	MCCOR	416404!
881661	WHITE	5487
88167	C-P	340413
88175	MCCOR	417344!
88176	HYST	415447
88177	MCCOR	416706
8818	TMTR	330385
88180	MCCOR	417316!
88180S	MCCOR	417316!
88183	MCCOR	416404!
88184	MCCOR	455079!
88185	MCCOR	415082
88186	MCCOR	415088
88186	MCCOR	415088!
88187	MCCOR	455144
88188	MCCOR	415350
88189	MCCOR	475384
8819	C-R	470590*
88191	MCCOR	2081
88192	MCCOR	6127
88193	MCCOR	476470
88197	MCCOR	476470!
88197	MCCOR	476470
88198	MCCOR	417343!
88199	MCCOR	410825
881991M1	MASSE	415483!
8819LPD	JN-MN	415090
8819LUP	JN-MN	415090
8820	C-R	470590
88202	MCCOR	417191
88203	MCCOR	46997S
88204	MCCOR	416294!
8820G	OSHKO	415001!
8820LPD	JN-MN	471413!
8821	C-R	470590
882125	WHITE	415449!
88214	MCCOR	416706!
88217	MCCOR	415991
88217	MCCOR	415991!
88218	MCCOR	415995!
88218	MCCOR	415995!
8821LPD	JN-MN	415437!
8821LPD	JN-MN	415437
8821LUP	JN-MN	415437
8821LUP	JN-MN	415437!
88221	MCCOR	5951
88222	MCCOR	473214
88223	MCCOR	5578
88224	MCCOR	417343!
8822A	C-R	472179
8822LPD	JN-MN	417362!
8822LUP	JN-MN	417362!
88230	MCCOR	5M867
88232	MCCOR	415995!
88232	MCCOR	415995!
88233	MCCOR	5M559
88235	MCCOR	417350!
88236	MCCOR	473010!
88237	MCCOR	416444
88238	MCCOR	455500
88239	MCCOR	418029!
8823LPD	JN-MN	415871
8823LUP	JN-MN	415871
8824	C-R	470590
88241	MCCOR	415442!
88241	MCCOR	55442
88242	MCCOR	417343!
88244	MCCOR	412473!
88245	MCCOR	5MR1009
88246	MCCOR	418028
88248	MCCOR	417316!
88249	MCCOR	416292
8824LPD	JN-MN	417606
8824LUP	JN-MN	417606
8825	C-R	470590
88251	MCCOR	55276=
88252	MCCOR	416956
88253	MCCOR	417484!
88257	MCCOR	415960
88258	MCCOR	412473!
88259	MCCOR	6575S
8825LPD	JN-MN	417525
8825LUP	JN-MN	417525
8826	TEKNI	471766!
88260	MCCOR	417134
88262	MCCOR	6846S=
88264	MCCOR	6754S=
88268	MCCOR	455566
8826LPD	JN-MN	417548*
8826LUP	JN-MN	417548
88271	MCCOR	415995!
88272	MCCOR	417486
88273	MCCOR	415234!
88274	MCCOR	415458!
88275	MCCOR	415146!
88275	MCCOR	415991
88277	MCCOR	5M643
88277S	MCCOR	410308!
88278	MCCOR	3103!
88279	MCCOR	415857!
88280	MCCOR	6930
88281	MCCOR	416706!
88283	MCCOR	415984!
88286	MCCOR	345146
88287	MCCOR	45825S
88288	MCCOR	40401
88292	MCCOR	417343!
88293	MCCOR	417480!
88294	MCCOR	415991
88296R	JOHND	472287!
88300	MCCOR	416500
88301	MCCOR	410825
88303	MCCOR	417621!
88304	MCCOR	411348!
88307	MCCOR	8976S
88308	MCCOR	418028
88309	MCCOR	8139
88310	MCCOR	7338N
88312	MCCOR	8370S
88313	MCCOR	417316!
88314	MCCOR	8429S
88319	EATON	370003A
8831LPD	JN-MN	471192
8831LUP	JN-MN	471192
883238	WHITE	417134
88326M	IH	411394!
88327	EATON	370121A
88327M	IH	450090
88343	AM WH	417491
883552	WHITE	410737!
883555	WHITE	5487
883557	WHITE	455858
8835LPD	JN-MN	417604
8835LUP	JN-MN	417604
8835S0	NATL	3983
8835SCR	SPG	8835S
8838378	RCA	240435
883865	WHITE	254287
883867	WHITE	456744N
8838LPD	JN-MN	455336*
8838LUP	JN-MN	455336
883935M4	MASSE	1037
8841LPD	JN-MN	417191
8841LPD	JN-MN	456585
8841LUP	JN-MN	417191
8841LUP	JN-MN	456585
8842	C-R	471137*
884299	WHITE	415483
884439C91	IH	415072
884579	WHITE	417354!
884581	WHITE	472179
884582	WHITE	415437
8845SS	JN-MN	476470
8846	C-R	471137
884615	BENDI	471267!
884634	SPICE	415023
8848	C-R	471137
8849	C-R	471137
88526A	HEIL	471760
88526A	HERCU	471760
885379	WHITE	6808N
885387	WHITE	410987!
885543	WHITE	6547
8855SS	JN-MN	471549!
8856SS	JN-MN	473405
8857	C-R	471137
8857LPD	JN-MN	416282
8857LUP	JN-MN	416282
8858LPD	JN-MN	410102
8860	C-R	471730
8860R	JN-MN	417247!
8861SS	JN-MN	473236!
88643	HYST	410737!
8864LPD	JN-MN	450474*
8864LUP	JN-MN	450474
8865	C-R	471730
8865LPD	JN-MN	415001!
8865LUP	JN-MN	415001!
8866	C-R	471730
8866A	C-R	474276!
8868LPD	JN-MN	455462
8868LUP	JN-MN	455462
886D6	WHITE	5951
8870	C-R	470645*
88702	C-R	416557
88710	C-R	416657*
887140	WHITE	HU013A
8871718	GMC	442380
8871719	GMC	416273!
8871720	GMC	416273!
8873095	GMC	416654
8873096	GMC	416654
8873427	GMC	730004
8873428	GMC	HU024A
8873LPD	JN-MN	473245!
8873LUP	JN-MN	473245!
8875	C-R	470645*
8875081	GMC	410686N
8875LUP	JN-MN	416380!*
88760	C-R	455129*
8876337	GMC	472179
8877993	GMC	6864S
8878141	BENDI	470590
8878142	BENDI	471785!
8880SSR	SPG	6638S
8881538	GMC	J1138
8881555	GMC	415938
8881715	GMC	472015!
8883	SPG	51322
8884561	GMC	470898
8885	C-R	8348N=
88870	GMC	473238!
888712	BUC-E	455117
888712	C-R	455117
888712M1	C-R	455117
888774	WHITE	6644
8887LPD	JN-MN	473448*
8887LUP	JN-MN	473448
88884A	HEIL	417316!
88884A	HERCU	417316!
8888S	SPG	9449
888910	C-R	416657
889197	WHITE	471870!
889246	WHITE	415995!
88958818	GMC	415449
889736C91	HOUGH	476470
889736C91	HOUGH	476470!
889736C91	IH	476470
889737C91	IH	417134
889738C91	HOUGH	417254
889738C91	IH	417254
889739C91	HOUGH	416041
889739C91	IH	416041
88973C91	IH	476470
8899R	JN-MN	473231
88AX-420	MACK	370003A
88AX1	MACK	473215!
88AX10	MACK	476838!
88AX100	MACK	417172
88AX100P3	MACK	417172
88AX101	MACK	50199S!
88AX101	MACK	6863S!
88AX102	MACK	473419!
88AX103	MACK	472015!
88AX104	MACK	473213!
88AX109	MACK	415449!
88AX11	MACK	470059
88AX11	MACK	470380!
88AX110	MACK	AR12+370033A
88AX110P1	MACK	417356!
88AX110P1	MACK	455188
88AX111	MACK	417196!
88AX113	MACK	471553!
88AX114	MACK	471570!
88AX115	MACK	471689!
88AX116	MACK	474281!
88AX117	MACK	473462
88AX118	MACK	473367!
88AX118	MACK	473367
88AX119	MACK	416738!
88AX119	MACK	450096
88AX12	MACK	473426
88AX120	MACK	472016
88AX120P2	MACK	472016

! Industrial Size/Type * Minor Width Difference

= The U.S. customer service number is 877-4-TIMKEN. The Canadian customer service numbers are 800-565-4927 (English) and 800-565-0438 (French-Canadian).

Mfr. No.	Name	Zero Duplication or Recommended Industrial
88AX120P3	MACK	472016
88AX121	MACK	411253!
88AX122	MACK	415001!
88AX123	MACK	415082
88AX124	MACK	455280
88AX125	MACK	415458!
88AX126	MACK	415960
88AX128	MACK	417354!
88AX129	MACK	415025
88AX13	MACK	417316!
88AX132	MACK	473426
88AX133	MACK	417481
88AX134	MACK	417539!
88AX135	MACK	417546!
88AX136	MACK	415483!
88AX138	MACK	415036
88AX138P3	MACK	415036
88AX13P3	MACK	417316!
88AX14	MACK	450040
88AX144	MACK	415995!
88AX145	MACK	473016!
88AX146	MACK	471567!
88AX147	MACK	5578$
88AX147P2	MACK	5578$
88AX149	MACK	417344!
88AX15	MACK	412119!
88AX150	MACK	456890
88AX151	MACK	416921!
88AX151P3	MACK	416921!
88AX152	MACK	416888!
88AX153	MACK	415058
88AX153P3	MACK	415058
88AX154	MACK	415437
88AX154	MACK	415437!
88AX155	MACK	417171!
88AX156	MACK	415394
88AX157P3	MACK	416024
88AX158	MACK	415021
88AX159	MACK	417621!
88AX159P2	MACK	417621
88AX16	MACK	471255!
88AX165	MACK	415995!
88AX165P2	MACK	415995!
88AX166	MACK	415302
88AX167	MACK	456105
88AX167P3	MACK	456105
88AX17	MACK	417273
88AX170	MACK	416706!
88AX170P2	MACK	416706=
88AX172	MACK	410102
88AX173	MACK	415551
88AX174	MACK	415035
88AX174	MACK	415035!
88AX175	MACK	472636!
88AX176	MACK	471224!
88AX177	MACK	416892!
88AX177P3	MACK	416892!
88AX178	MACK	415150!
88AX18	MACK	471554!
88AX182	MACK	471554!
88AX183	MACK	471567!
88AX184	MACK	471570!
88AX186	MACK	473367!
88AX186	MACK	473367
88AX187	MACK	470088
88AX188	MACK	473238
88AX189	MACK	472924!
88AX19	MACK	415035!
88AX19	MACK	415035
88AX190	MACK	416738!
88AX190	MACK	450096
88AX191	MACK	412943
88AX192	MACK	412119!
88AX193	MACK	415001!
88AX194	MACK	415995!
88AX195	MACK	415025
88AX196	MACK	415035
88AX196	MACK	415035!
88AX197	MACK	415041
88AX198	MACK	415960!
88AX198P2	MACK	415960!
88AX199	MACK	417298
88AX2	MACK	473458!
88AX20	MACK	415138!
88AX200	MACK	455253
88AX201	MACK	416239!
88AX202	MACK	415142
88AX203	MACK	415064
88AX204	MACK	473245!
88AX205	MACK	410987!
88AX206	MACK	415350
88AX207	MACK	415196!
88AX208	MACK	473435
88AX209	MACK	415960
88AX21	MACK	415351!
88AX210	MACK	471689!
88AX211	MACK	43086S
88AX212	MACK	415066
88AX214	MACK	416271!
88AX215	MACK	416288!
88AX215P3	MACK	416288!
88AX216	MACK	471688
88AX217	MACK	411500
88AX218	MACK	416921!
88AX219	MACK	476470
88AX21P3	MACK	415351!
88AX22	MACK	415041
88AX221	MACK	417181!
88AX222	MACK	100495
88AX222	MACK	417349
88AX223	MACK	416664!
88AX225	MACK	455123
88AX225P3	MACK	455123
88AX226	MACK	415196!
88AX226P2	MACK	415196=
88AX226P2	MACK	415196!
88AX229	MACK	417247!
88AX231	MACK	471553!
88AX231P2	MACK	471567!
88AX231P3	MACK	471567!
88AX232	MACK	417343!
88AX233	MACK	416158
88AX234	MACK	416167!
88AX236	MACK	471763
88AX239	MACK	455625=
88AX24	MACK	473423
88AX240	MACK	415060
88AX240	MACK	455060
88AX240P3	MACK	415060
88AX240P3	MACK	455060
88AX241	MACK	470954!
88AX241P3	MACK	470954!
88AX242	MACK	473453
88AX247	MACK	471570!
88AX247P3	MACK	471570!
88AX248	MACK	476470
88AX248P2	MACK	476470
88AX249	MACK	415938
88AX251	MACK	412871!
88AX253	MACK	417546!
88AX255	MACK	415960!
88AX257	MACK	415995!
88AX259	MACK	415991
88AX259P2	MACK	415991
88AX259P2	MACK	415991!
88AX260	MACK	417495
88AX260P1	MACK	417495
88AX261P2	MACK	100494
88AX261P2	MACK	476470!*
88AX263	MACK	471760
88AX266	MACK	455472=
88AX267	MACK	472924!
88AX268	MACK	471271!
88AX268P3	MACK	471271!
88AX269P3	MACK	471570!
88AX270	MACK	416865!
88AX271	MACK	416664!
88AX272	MACK	415449!
88AX272P2	MACK	415449
88AX273	MACK	415867
88AX274P2	MACK	418028!
88AX275	MACK	417604
88AX278	MACK	416029N!
88AX28	MACK	450593!
88AX281	MACK	472012
88AX281P2	MACK	472012
88AX282	MACK	471689!
88AX282P2	MACK	471689!
88AX282P3	MACK	471689!
88AX286	MACK	6635S
88AX286P3	MACK	455861=
88AX287	MACK	370003A
88AX288	MACK	5405
88AX289	MACK	5403
88AX290	MACK	5406$
88AX291	MACK	415995!
88AX291P2	MACK	415995!
88AX291P3	MACK	415995!
88AX292	MACK	415991
88AX292	MACK	455146!
88AX293	MACK	415995!
88AX3	MACK	472397!
88AX300	MACK	416049N=
88AX303P2	MACK	5578$
88AX306	MACK	472164!
88AX308	MACK	417362!
88AX311P3	MACK	471224!
88AX312	MACK	472070
88AX314P2	MACK	415897N=
88AX315	MACK	415995!
88AX316	MACK	455310
88AX316P3	MACK	455310
88AX317	MACK	7747=
88AX319P2	MACK	417484!
88AX321P3	MACK	470954
88AX322	MACK	415449!
88AX322P2	MACK	415449
88AX324	MACK	417022
88AX326	MACK	370019A
88AX327	MACK	416029N!
88AX327P2	MACK	416029N!
88AX328	MACK	417172
88AX331	MACK	254287
88AX331P3	MACK	254287
88AX334	MACK	415128
88AX334P3	MACK	415128
88AX337	MACK	443527*=
88AX34	MACK	457874
88AX340	MACK	416706=
88AX340P2	MACK	416706=
88AX341	MACK	415995!
88AX341P2	MACK	415995!
88AX342P2	MACK	410102=
88AX343P2	MACK	472016!
88AX344P2	MACK	412119=
88AX345P2	MACK	415001=
88AX346P2	MACK	415960
88AX347P2	MACK	417621!
88AX348P2	MACK	415991
88AX348P2	MACK	415991!
88AX349P3	MACK	240731
88AX350P3	MACK	343186
88AX353	MACK	472924!
88AX353P3	MACK	472924!
88AX354P2	MACK	416706
88AX355P2	MACK	415995!
88AX356P2	MACK	410102=
88AX357P2	MACK	472016
88AX358P2	MACK	412119
88AX359P2	MACK	415001
88AX360P2	MACK	415960!
88AX361P2	MACK	417621
88AX362P2	MACK	415146!
88AX362P2	MACK	415146N=
88AX362P2	MACK	415991
88AX363P2	MACK	417079=
88AX364P2	MACK	417158=
88AX365P2	MACK	416921=
88AX366P2	MACK	416404=
88AX367P2	MACK	455566=
88AX368P2	MACK	415389
88AX370P3	MACK	254270!
88AX371P2	MACK	417262=
88AX372	MACK	416892
88AX373	MACK	415058
88AX374	MACK	370057A
88AX375	MACK	416865
88AX376	MACK	370069A
88AX376	MACK	380069A
88AX378	MACK	416865
88AX379	MACK	370036A
88AX379	MACK	370349A
88AX380	MACK	370019A
88AX382	MACK	370069A
88AX382	MACK	380069A
88AX383P2	MACK	416294=
88AX385P3	MACK	471570!
88AX386P2	MACK	332134
88AX386P3	MACK	332134
88AX387P3	MACK	415294!
88AX388P2	MACK	481315N=
88AX390P2	MACK	472012
88AX391P2	MACK	415027
88AX392P2	MACK	455185N=
88AX393P3	MACK	416239!
88AX394P3	MACK	415867
88AX395P3	MACK	416039
88AX396P3	MACK	417022
88AX397P3	MACK	415128
88AX398P3	MACK	416100=
88AX4	MACK	471549!
88AX400	MACK	472012
88AX401P2	MACK	470898
88AX402	MACK	370069A
88AX402	MACK	380069A
88AX403	MACK	370069A
88AX403	MACK	380069A
88AX404	MACK	370069A
88AX404	MACK	380069A
88AX405	MACK	415058
88AX406	MACK	370019A
88AX407	MACK	416892
88AX408P1	MACK	470954!
88AX409P3	MACK	416951
88AX410P2	MACK	470954
88AX410P3	MACK	470954!
88AX415P3	MACK	471570!
88AX416P2	MACK	415449

! Industrial Size/Type * Minor Width Difference $ F-M Number Is Part Of A Kit
= The U.S. customer service number is 877-4-TIMKEN. The Canadian customer service numbers are 800-565-4927 (English) and 800-565-0438 (French-Canadian).

Mfr. No.	Name	Zero Duplication or Recommended Industrial
88AX417	*MACK*	**415294**!
88AX418	*MACK*	**415058**
88AX419	*MACK*	370033A
88AX421	*MACK*	**416892**
88AX424	*MACK*	370069A
88AX424	*MACK*	380069A
88AX425	*MACK*	370037A
88AX425	*MACK*	370338A
88AX427	*MACK*	370019A
88AX429P3	*MACK*	**471224**!
88AX432	*MACK*	370005A
88AX439	*MACK*	370023A
88AX440	*MACK*	**415991**!
88AX440	*MACK*	**415991**
88AX440P2	*MACK*	**415991**!
88AX440P2	*MACK*	**415991**
88AX440P4	*MACK*	**415991**
88AX441P3	*MACK*	**417278**
88AX442P3	*MACK*	**415294**!
88AX443	*MACK*	370173A
88AX444P2	*MACK*	415983N!
88AX448	*MACK*	**415058**
88AX450	*MACK*	370005A
88AX454	*MACK*	**472012**
88AX455	*MACK*	4489V=
88AX455	*MACK*	713750
88AX463	*MACK*	713750
88AX463	*MACK*	714489
88AX466	*MACK*	**415058**
88AX467	*MACK*	**416892**
88AX469	*MACK*	370048A
88AX469	*MACK*	380048A
88AX47	*MACK*	**415988**
88AX49	*MACK*	**415995**!
88AX49-P2	*MACK*	**415995**!
88AX5	*MACK*	**471137**
88AX50	*MACK*	**416706**
88AX51	*MACK*	**416706**!
88AX52	*MACK*	**412943**
88AX53	*MACK*	**411253**!
88AX54	*MACK*	**415991**
88AX54	*MACK*	455146!
88AX55	*MACK*	**417210**!
88AX55-P2	*MACK*	**417210**=
88AX56	*MACK*	**412473**!
88AX58	*MACK*	**455151**
88AX59	*MACK*	370036A
88AX59	*MACK*	370349A
88AX59P3	*MACK*	370036A
88AX59P3	*MACK*	370349A
88AX6	*MACK*	**470334**!
88AX61	*MACK*	**415995**!
88AX61P3	*MACK*	**415995**!
88AX62	*MACK*	**416666**
88AX63	*MACK*	**472572**!
88AX64	*MACK*	**410987**!
88AX65	*MACK*	**416865**!
88AX65P3	*MACK*	**416865**!
88AX66	*MACK*	**473245**!
88AX67	*MACK*	**473463**
88AX68	*MACK*	**471354**!
88AX69	*MACK*	5751
88AX7	*MACK*	**472924**!
88AX70	*MACK*	**416125**!
88AX71	*MACK*	455056
88AX72	*MACK*	**417269**!
88AX73	*MACK*	417516
88AX74	*MACK*	**455297**
88AX75	*MACK*	**476838**!
88AX756	*MACK*	J1289*=
88AX758	*MACK*	J1293*=
88AX75P1	*MACK*	**476838**!
88AX75P3	*MACK*	**476838**!
88AX76	*MACK*	**473426**
88AX76P3	*MACK*	**473426**
88AX77	*MACK*	370036A
88AX77	*MACK*	370349A
88AX79	*MACK*	**415645**!
88AX79	*MACK*	455104
88AX79P3	*MACK*	**415645**!
88AX79P3	*MACK*	455104
88AX7P3	*MACK*	**472924**!
88AX8	*MACK*	**450039**
88AX81	*MACK*	**473438**
88AX82	*MACK*	**472157**!
88AX82	*MACK*	**472157**
88AX83	*MACK*	**472185**!
88AX84	*MACK*	**416332**!
88AX84-P1	*MACK*	**416332**!
88AX84-P2	*MACK*	**416332**!
88AX88	*MACK*	**415001**!
88AX89	*MACK*	**415116**
88AX9	*MACK*	**473438**
88AX90	*MACK*	**470088**
88AX93	*MACK*	**471354**!
88AX93P3	*MACK*	**471354**!
88AX94	*MACK*	**417556**
88AX95	*MACK*	**417223**
88AX96	*MACK*	**411376**!
88AX97	*MACK*	**415437**!
88AX97	*MACK*	**415437**
88AX97P3	*MACK*	**415437**!
88AX97P3	*MACK*	**415437**
88AX98	*MACK*	**415350**
88AX99	*MACK*	**417563**
88AXB1	*MACK*	**416706**
88AXB2	*MACK*	**415001**!
88AXB21	*MACK*	416029N!
88AXB4	*MACK*	**416706**!
88AXB5	*MACK*	**415960**
88AXBF	*MACK*	**417621**!
88AXM	*MACK*	**415995**!
88AXT21	*MACK*	**416239**!
88G490	*LEYLD*	224470
88G490	*LEYLD*	44X72X10!
88G561	*LEYLD*	1873
88X110X12	*SIMRT*	88X110X12
88X110X12SC	*TRSCM*	88X110X12
88X110X12TC	*TRSCM*	88X110X12
890016C91	*IH*	**416380**!
8900LPD	*JN-MN*	**415284**
8900LUP	*JN-MN*	**415284**
8900S	*SPG*	6886S
8901R	*JN-MN*	**417562**
890475	*WHITE*	**470530**!
89070	*C-P*	**470954**!
8909	*HYST*	**470334**!
891002	*WHITE*	HU028A
891004	*WHITE*	HU034A
891015	*WHITE*	370001A
891033	*WHITE*	370001A
891034	*WHITE*	370001A
891035	*WHITE*	370001A
8910A	*C-R*	**415449**!
89121024	*RCA*	**470954**
89121027	*RCA*	**471224**
891437	*CHRYS*	5797
891448	*CHRYS*	**470354**
891448	*CLARK*	**470354**
891448	*MASSE*	**470354**
89185	*AM WH*	**416239**!
891944	*CLARK*	204013
8919LPD	*JN-MN*	**415090***
8919LUP	*JN-MN*	**415090**
8920	*FALKC*	**416664**!
8920	*FED*	**416664**!
8920200	*GMC*	473476
892066	*WHITE*	370007A
8921150B	*GMC*	**470954**!
8921301	*GMC*	455956H
8922045	*GMC*	**417344**=
8922045-B	*GMC*	**417344**=
8922046	*GMC*	**417344**=
8923654	*GMC*	**417550**
8923655	*GMC*	J2037=
8924374	*GMC*	**455134**
8924453	*GMC*	39904
892457	*WHITE*	5481
8924LPD	*JN-MN*	**471833**
8925LPD	*JN-MN*	417267
8925LUP	*JN-MN*	417267
8926135	*GMC*	357971V=
8926902	*GMC*	**415035**
89270	*BR-ST*	**473426**
8927748	*GMC*	**415284**
8927749	*GMC*	327934
8928213	*GMC*	454136N
8928LPD	*JN-MN*	472951
8928LPD	*JN-MN*	**474252**
8928LUP	*JN-MN*	472951
8928LUP	*JN-MN*	**474252**
8929134	*DETRO*	**472324**
8929134	*GMC*	**472324**
8929154	*GMC*	484156V
8929213	*GMC*	454136N
8929503	*GMC*	4494V
893	*ITM*	224040
893	*ITM*	40X60X10!
89307	*HYST*	**417262**!
8931A	*C-R*	**415088**
8931A	*C-R*	**415088**!
8932	*FULLE*	240735
893220	*WHITE*	6597S
893220K1	*DIA*	6597S
893230	*WHITE*	6597S
8932A	*C-R*	415832
8933002971	*AMC*	424
893300414	*AMC*	716445
8933004143	*AMC*	716445
8933004143	*NOK*	716445
893747	*WHITE*	100495
893747	*WHITE*	**417349**
893747T2	*DIA*	**417349**!
893788C91	*IH*	**471571**
8941LUP	*JN-MN*	457299
894225C91	*IH*	**412119**
8943LPD	*JN-MN*	455129*
8943LUP	*JN-MN*	455129
8945LUP	*JN-MN*	**415023**
8945R	*JN-MN*	**415023**
894631	*SPICE*	**415995**!
8946315	*SPICE*	**415072**
8946316	*SPICE*	**415035**!
8946316	*SPICE*	**415035**
894632	*SPICE*	**415449**!
894633	*H-S*	**415351**!
894633	*SPICE*	**415351**!
894637	*SPICE*	**415991**
894637	*SPICE*	455146!
894638	*SPICE*	**470712**!
8946LPD	*JN-MN*	**416891**!
8946LUP	*JN-MN*	**416891**!
894763M1	*MASSE*	**416921**!
8947LPD	*JN-MN*	**415072**
8947LUP	*JN-MN*	**415072**
8948LPD	*JN-MN*	**415090**
8948LUP	*JN-MN*	**415090**
8949LPD	*JN-MN*	**417562**
8949LUP	*JN-MN*	**417562**
894A786	*GE*	450457
8950LPD	*JN-MN*	**416229**
8950LUP	*JN-MN*	**416229**
895121C1	*IH*	**417316**
8951LPD	*JN-MN*	**415116**
8951LUP	*JN-MN*	**415116**
8952LPD	*JN-MN*	**455406**!
8952LUP	*JN-MN*	**455406**!
8953000237	*AMC*	4019N
8953000239	*AMC*	470547
8953000476	*AMC*	**473212**
8953002642	*AMC*	**473452**
8953LPD	*JN-MN*	**417602**!
8953LUP	*JN-MN*	**417602**!
895486	*WHITE*	415983N!
895486T2	*DIA*	415983N!
895486TZ	*WHITE*	415983N!
8954LPD	*JN-MN*	**417604**
8954LUP	*JN-MN*	**417604**
8955LPD	*JN-MN*	**416364**!
8955LUP	*JN-MN*	**416364**!
89569	*US-EL*	**471821**!
8956A	*C-R*	**417621**!
8956LPD	*JN-MN*	**417542**
8956LUP	*JN-MN*	**417542**
895781	*WHITE*	**410496**!
8960B	*HYST*	**416921**!
8961248	*GMC*	2361
896473	*ROCKW*	**415995**!
896473	*ROCKW*	**415995**!
896473	*WHITE*	**415995**!
896473T2	*DIA*	**415995**!
89660	*BR-ST*	7014S
89692	*BR-ST*	**471267**!
896941R91	*IH*	370048A
896K1	*WHITE*	**474276**
89724	*CHRYS*	**471827**
8972LPD	*JN-MN*	**472185**!
8972LUP	*JN-MN*	**472185**!
897348R91	*IH*	**412119**
89735R1	*IH*	240735
8973R	*JN-MN*	**472572**!
8973S	*SPG*	9015S
897436R91	*IH*	416426H=
897599R91	*IH*	**455005**
8975LPD	*JN-MN*	**471619**!
8975LUP	*JN-MN*	**471619**!
898235-R93	*IH*	370019A
8983501389	*AMC*	4370N
8983501872	*AMC*	**474278**
8983503010	*AMC*	**473214**!
8983503063	*AMC*	9912
8983503504	*AMC*	710202
8983503752	*AMC*	223831
8983504434	*AMC*	**472572**
8985R	*JN-MN*	455328
89878	*HYST*	485725N
8989LPD	*JN-MN*	**450084**!
8989LUP	*JN-MN*	**450084**!
898F8	*C-R*	415656
8991LPD	*JN-MN*	**411376**!
8991LUP	*JN-MN*	**411376**!
899246	*WHITE*	**415995**!
8993LPD	*JN-MN*	55539=
8993LUP	*JN-MN*	55539=
899448	*CLARK*	100495
899448	*CLARK*	**417349**
8998	*DICO*	441319
89986R91	*IH*	**450143**

! Industrial Size/Type * Minor Width Difference

= The U.S. customer service number is 877-4-TIMKEN. The Canadian customer service numbers are 800-565-4927 (English) and 800-565-0438 (French-Canadian).

Mfr. No.	Name	Zero Duplication or Recommended Industrial
8999LPD	*JN-MN*	**417496***
8999LUP	*JN-MN*	**417496**
899A4	*WHITE*	408
8A0-501-641A	*AUDI*	1962
8A1096	*FED*	**410308!**
8A1126	*FED*	**473463**
8A1177A	*FORD*	**471835!**
8A1177A1	*FORD*	**471835!**
8A1177A2	*FORD*	**471835!**
8A1177A3	*FORD*	**471835!**
8A1190A	*FORD*	**473235**
8A3591A1	*FORD*	240151
8A3591A2	*FORD*	240151
8A56277S	*TROS*	**55301S**
8A6000	*FED*	**471570!**
8A63	*PUL*	HU013A
8A64	*PUL*	HU009A
8A7261	*FED*	**473215!**
8A7262	*FED*	**471570!**
8A7976	*FED*	**450307**
8A8203	*FED*	**470898!**
8A8579	*FED*	**415449!**
8AX1177	*FORD*	**471835!**
8B136	*CATER*	**472705!**
8B2240	*FED*	**410708**
8B2702	*CATER*	**473367!**
8B2702	*CATER*	**473367**
8B6341	*CATER*	417513
8B7180	*CATER*	**473228**
8B7618	*CATER*	**410987!**
8B7989	*CATER*	**415437**
8B8252	*CATER*	**473215!**
8B8255	*CATER*	**472409!**
8B8294	*CATER*	**416654!**
8B8359	*CATER*	**471766!**
8B8616	*CATER*	**476470**
8B8925	*CATER*	**473229**
8B9631	*CATER*	**470334!**
8C3100	*CATER*	**471192**
8C5167	*CATER*	**417484!**
8C5210	*CATER*	**471267**
8C5236	*CATER*	73478=
8C815248	*FUNK*	**472164!**
8C87638	*FUNK*	**411253!**
8D1175	*FORD*	**410987!**
8D2311	*CATER*	**416167!**
8D3902	*CATER*	**416332!**
8EB1190	*FORD*	6638S
8EB3591A	*FORD*	**480630!**
8EB3591A1	*FORD*	**480630!**
8EB3591A2	*FORD*	**480630!**
8EQH2965	*FORD*	**471689!**
8F0019	*CATER*	100641
8F1596	*CATER*	**415327**
8F2079	*CATER*	**471705!**
8F3522	*CATER*	**472179**
8F3528	*CATER*	**471763**
8F3600	*CATER*	**415035**
8F4331	*CATER*	413479
8F450	*CATER*	470328
8F450	*CATER*	**481213!**
8F5179	*CATER*	**471442**
8F530	*CATER*	**415023**
8F5340	*CATER*	240731
8F5583	*CATER*	**417562**
8F7702	*CATER*	727410
8F9770	*CATER*	**417316!**
8G1002	*HU-WR*	**415027**
8G1002	*HU-WR*	**415027!**
8G1085	*HU-WR*	**412473!**
8G1176	*HU-WR*	**471649!**
8G1178	*HU-WR*	**473205**
8H7319	*CATER*	**417621**
8H9155	*CATER*	456946N=
8H9180	*CATER*	7188S
8H9220	*CATER*	**471267!**
8H9519	*CATER*	**474274**
8H9520	*CATER*	**471267!**
8H9826	*CATER*	**470605!**
8H9836	*CATER*	**473232**
8J1190	*FORD*	6547
8J4869	*CATER*	**416364!**
8J7893	*JNSON*	J1119
8L2594	*CATER*	**471570!**
8L2595	*CATER*	**417350!**
8L2891	*CATER*	**481443!**
8L3024	*CATER*	**481443!**
8L6547	*CATER*	**472475**
8L7657	*FORD*	**473235!**
8L7657A	*FORD*	**473235!**
8L7657B	*FORD*	7300S
8L7657C	*FORD*	7300S
8M1177	*FORD*	40067S=
8M1177A	*FORD*	**473228**
8M1177B	*FORD*	**473228**
8M3524	*CATER*	**470334!**
8M3591	*FORD*	240356
8M4104	*CATER*	**473459**
8M4676	*FORD*	5778
8M4676A	*FORD*	5778
8M7657	*FORD*	**473228!**
8M8110	*CATER*	456837V
8M8761	*CATER*	**472018**
8M8955	*CATER*	**415035**
8M9299	*CATER*	**471570!**
8N-4233A	*FORD*	**472492**
8N4233	*FORD*	**472492!**
8N4233A1	*FORD*	**472492!**
8N4233A2	*FORD*	**472492!**
8N4248	*FORD*	6643S
8N4248A	*TRU-P*	6643S
8N4248B	*FORD*	6643S
8N4251	*FORD*	**417316!**
8N4251B	*FORD*	**417316!**
8N7052	*FORD*	**472258**
8N7052A	*FORD*	**472258**
8N7052A1	*FORD*	**472258**
8N7052A2	*FORD*	**472258**
8N7052A3	*FORD*	**472258**
8N7052H	*FORD*	**471141!**
8QH1174	*FORD*	6532S=
8QH1181	*FORD*	6532S=
8S2225	*CATER*	**254287***
8S4862	*B-L-H*	**472164!**
8S5575	*CATER*	**471442!**
8S5575	*CATER*	482971
8T0085	*CATER*	417940!
8T0322	*CATER*	416865N
8T1009	*HU-WR*	**473313**
8T1020	*HU-WR*	**473245!**
8T1051	*HU-WR*	**415938**
8T1284	*HU-WR*	**417563**
8T1402	*HU-WR*	**472016**
8T2230	*CATER*	4419!
8T2604	*CATER*	351487
8T2604	*CATER*	7188S
8T3007	*CATER*	77980=
8T3413	*CATER*	**473232**
8T4676A	*FORD*	**410737!**
8T4676B	*FORD*	**410737!**
8T6917	*CATER*	**416921!**
8T7021	*CATER*	417939
8T7274	*FORD*	**472705!**
8X16X7	*FORSH*	8X16X7
8X16X7	*SIMRT*	8X16X7
8X16X7SC	*TRSCM*	8X16X7
8X18X5AN(35)	*ISP*	8X18X5
8X18X7SC	*TRSCM*	8X18X7
8X18X7TC	*TRSCM*	8X18X7
8X22X7	*FORSH*	8X22X7!
8X22X7	*SIMRT*	8X22X7!
8X22X7SC	*TRSCM*	8X22X7!
8X22X7TC	*TRSCM*	8X22X7!
8X24X7	*FORSH*	8X24X7
8X24X7	*SIMRT*	8X24X7
8X24X7SC	*TRSCM*	8X24X7
8X24X7TC	*TRSCM*	8X24X7
9-09924-449-0	*VILA*	228480
900	*C-R*	415983N+99372
900	*UNIVE*	**415090***
900016	*EL-MO*	**471424!**
90003	*C-R*	**55301S**
90005	*C-R*	**55301S**
90006	*C-R*	417940!
90006	*C-R*	**55301S***
900108	*EL-MO*	**416664!**
900110	*MICH*	**415090***
9001100	*UNIVE*	**415090***
9001223	*GMC*	**471466!**
90015	*C-R*	455476
900154C	*SPG*	712140
900156	*EL-MO*	**415867**
90016	*C-R*	455476
900160	*C-R*	**456462**
90017	*C-R*	455476
90019	*C-R*	455476
9001R	*JN-MN*	417498
9002	*JN-MN*	**416892**
900202	*EL-MO*	**455079!**
900218	*EL-MO*	**471567!**
900229	*EL-MO*	**415088**
900229	*EL-MO*	**415088!**
90023	*C-R*	**455462***
90024	*C-R*	**455462**
90025	*C-R*	**455462**
900250	*C-R*	**455462**
900253C	*SPG*	712139
90026	*C-R*	**455462**
900276	*EL-MO*	**471570!**
900279	*EL-MO*	**417556**
90030	*C-R*	**415090**
900301	*EL-MO*	**412920!**
900302	*EL-MO*	**471763**
900313	*EL-MO*	**473214!**
90035	*C-R*	**415090**
90036	*C-R*	**415090***
900366	*EL-MO*	**416154!**
900384	*EL-MO*	**415437**
900392	*EL-MO*	**471224!**
900402C	*SPG*	**472150**
9004LPD	*JN-MN*	**455019!***
9004LUP	*JN-MN*	**455019!**
9005	*C-R*	710254
9005	*JN-MN*	370021A
900509	*EL-MO*	**416666**
90052	*DENCO*	**410102**
900520	*EL-MO*	**416239!**
9005354	*GMC*	**415938**
9005357	*GMC*	**417602!**
9005359	*GMC*	**415938**
9005360	*GMC*	**416381**
900553	*EL-MO*	**415995!**
900556	*EL-MO*	**472397!**
90060	*C-R*	**415090**
90061	*C-R*	**415090**
900621	*EL-MO*	**415725!**
90063	*C-R*	**415090**
90066	*SPG*	**473367**
900665	*EL-MO*	**473241**
900666	*EL-MO*	**471192**
90067	*SPG*	**473228!**
900695	*EL-MO*	**471316**
900734	*EL-MO*	**473227!**
900757	*EL-MO*	**415449!**
900831	*EL-MO*	**417079**
90091926	*GMC*	228008
900920	*EL-MO*	**416130!**
900927	*EL-MO*	416556!
900927	*EL-MO*	**472157**
900939	*EL-MO*	**417474**
900959	*EL-MO*	**471316**
90096	*ADAMS*	**471413**
900974	*EL-MO*	**472015!**
900991	*EL-MO*	**415302**
901	*C-R*	712270+99086
901	*C-R*	712270+99087
901017	*WAYNE*	240733
901018	*WAYNE*	**450039**
90102037	*DEMPC*	**471760**
901027	*WAYNE*	450908=
9010625	*GMC*	J1117
9010630	*GMC*	**415483**
9010A	*C-R*	**471763***
9012	*JN-MN*	370023A
90122607	*GMC*	710232
90122609	*GMC*	1108
90123632	*JOY*	**471413!**
90124110	*JOY*	**415058**
901241100	*JOY*	**417344!**
901241101	*JOY*	**416654!**
901241104	*JOY*	**415995!**
901241105	*JOY*	**473245!**
901241106	*JOY*	470059
901241106	*JOY*	**470380!**
901241108	*JOY*	**480210!**
90124111	*JOY*	**417487**
901241115	*JOY*	**416865!**
90124112	*JOY*	**456105**
901241120	*JOY*	**481073**
901241121	*JOY*	**471553!**
901241123	*JOY*	**471689!**
901241124	*JOY*	**471649!**
901241125	*JOY*	**471224!**
901241127	*JOY*	**471763**
901241128	*JOY*	**476838!**
901241129	*JOY*	**470712!**
90124113	*JOY*	**415035**
901241113	*JOY*	**415035!**
901241131	*JOY*	**471750!**
901241132	*JOY*	**470625!**
901241133	*JOY*	**473229**
901241135	*JOY*	**470712!**
901241137	*JOY*	**473010**
901241138	*JOY*	**473446**
901241139	*JOY*	**473236!**
901241142	*JOY*	**470334!**
901241144	*JOY*	**473450**
901241145	*JOY*	**471866!**
901241146	*JOY*	**473458!**
901241147	*JOY*	**471868**
901241148	*JOY*	**472439**
90124115	*JOY*	**455008**
901241151	*JOY*	**472397!**
901241152	*JOY*	**473242**
901241153	*JOY*	**416738!**
901241153	*JOY*	450096
901241154	*JOY*	**450307**
901241155	*JOY*	**472016**

! Industrial Size/Type * Minor Width Difference

= The U.S. customer service number is 877-4-TIMKEN. The Canadian customer service numbers are 800-565-4927 (English) and 800-565-0438 (French-Canadian).

Mfr. No.	Name	Zero Duplication or Recommended Industrial
901241158	JOY	411253!
90124116	JOY	471766!
901241160	JOY	410694!
901241161	JOY	411394!
901241162	JOY	416271!
901241163	JOY	417073
901241164	JOY	410496!
901241165	JOY	415302
901241166	JOY	415458!
901241167	JOY	417485
901241168	JOY	455005
901241169	JOY	417134
90124117	JOY	457874
901241172	JOY	417488!
901241173	JOY	55155=
901241174	JOY	417621!
901241175	JOY	416288!
901241178	JOY	412473!
901241179	JOY	417191
901241179	JOY	456585
90124118	JOY	416339
90124118	JOY	455031!
901241180	JOY	415025
901241181	JOY	455249!
901241182	JOY	415711
901241183	JOY	415937!
901241184	JOY	415379!
901241184	JOY	415379
901241187	JOY	417211!
901241189	JOY	415138!
901241190	JOY	415034!
901241192	JOY	417513
901241193	JOY	416891!
901241194	JOY	472157!
901241194	JOY	472157
901241195	JOY	416888!
9012412	JOY	417546!
90124120	JOY	415045!
901241200	JOY	416167!
901241201	JOY	416865!
901241202	JOY	416865!
901241206	JOY	457874
901241208	JOY	416229
901241209	JOY	411376!
90124121	JOY	416892!
901241211	JOY	415551
901241213	JOY	417606
901241214	JOY	417020
901241216	JOY	471648
90124122	JOY	455024
90124123	JOY	412119!
90124124	JOY	471765!
901241241	JOY	470712!
90124125	JOY	417316!
901241251	JOY	471272!
901241254	JOY	415995!
901241259	JOY	471570!
90124126	JOY	476470
901241263	JOY	415991
901241263	JOY	455146!
901241268	JOY	471567!
901241269	JOY	473213!
901241270	JOY	417492
901241271	JOY	416892!
901241272	JOY	415938
901241273	JOY	418028
901241273	JOY	455137!
901241274	JOY	415437
901241275	JOY	471554!
901241279	JOY	416664!
90124128	JOY	415036
901241282	JOY	473228

Mfr. No.	Name	Zero Duplication or Recommended Industrial
90124129	JOY	415645!
90124129	JOY	455104
901241290	JOY	415938
901241293	JOY	473474
901241294	JOY	471466!
901241296	JOY	450177
9012413	JOY	416107!
9012413	JOY	455073
901241301	JOY	416125!
901241302	JOY	417262!
901241303	JOY	472311!
901241307	JOY	415995!
901241308	JOY	471424!
901241315	JOY	471391!
901241323	JOY	471692!
901241328	JOY	472560N!
901241329	JOY	473237!
90124133	JOY	415007
90124135	JOY	473214
901241354	JOY	417602!
90124136	JOY	415988
90124137	JOY	471138!
901241370	JOY	470605!
901241376	JOY	472492!
901241391	JOY	473197
9012414	JOY	416666
90124142	JOY	415379!
90124142	JOY	415379
901241427	JOY	417316!
90124143	JOY	418028
90124143	JOY	455137!
90124145	JOY	415960
901241452	JOY	417316!
901241457	JOY	473367
90124146	JOY	473238
90124147	JOY	415960
90124148	JOY	472924!
90124149	JOY	417356!
90124149	JOY	455188
9012415	JOY	472185!
90124151	JOY	472636!
90124152	JOY	415995!
90124154	JOY	473232
90124157	JOY	416153!
90124158	JOY	470530!
9012416	JOY	450084!
90124160	JOY	410737!
90124161	JOY	473214
90124164	JOY	415379
90124164	JOY	415379!
90124165	JOY	416239!
90124166	JOY	417247!
9012417	JOY	415001!
90124171	JOY	415991
90124171	JOY	455146!
90124172	JOY	410102
90124173	JOY	471571
90124176	JOY	473467
90124177	JOY	413469!
90124178	JOY	417171!
90124179	JOY	415021
9012418	JOY	413469!
90124180	JOY	415988
90124181	JOY	415023
90124182	JOY	473215!
90124184	JOY	471821!
90124187	JOY	474265
90124189	JOY	472144!
9012419	JOY	415027
9012419	JOY	415027!
90124191	JOY	473460
90124194	JOY	472394

Mfr. No.	Name	Zero Duplication or Recommended Industrial
90124196	JOY	416444
90124197	JOY	411245!
90124198	JOY	415449!
90124199	JOY	455151
901244100	JOY	471736
901244107	JOY	470625!
901244108	JOY	470625!
901244109	JOY	470059
901244109	JOY	470380!
90124411	JOY	417487
901244110	JOY	470059
901244110	JOY	470380!
901244112	JOY	473229
901244113	JOY	473229
90124412	JOY	456105
901244120	JOY	472179
901244121	JOY	472179
901244127	JOY	472572!
901244132	JOY	472492!
901244134	JOY	472397!
901244136	JOY	473463
901244137	JOY	416738!
901244137	JOY	450096
901244139	JOY	450532
901244140	JOY	473467
901244145	JOY	473243
901244149	JOY	471272!
901244153	JOY	411253!
901244154	JOY	412920!
901244155	JOY	455136
90124416	JOY	471766!
901244173	JOY	415449!
901244181	JOY	417344!
901244182	JOY	417158!
901244189	JOY	417351!
901244191	JOY	417488!
901244197	JOY	417490
901244200	JOY	455336
901244202	JOY	418028
901244202	JOY	455137!
901244203	JOY	476470
901244213	JOY	417356!
901244213	JOY	455188
901244222	JOY	416137
901244236	JOY	417278
901244246	JOY	415072
90124425	JOY	417316!
90124426	JOY	476470
901244260	JOY	411394!
901244278	JOY	471870!
9012443	JOY	416107!
9012443	JOY	455073
90124430	JOY	416921!
90124433	JOY	415007
90124437	JOY	471138!
90124441	JOY	417507
90124441	JOY	417507!
90124443	JOY	418028
90124443	JOY	455137!
901244461	JOY	472164!
9012447	JOY	415449!
90124476	JOY	473236!
90124485	JOY	50266
90124489	JOY	471224!
90124491	JOY	471224!
90124493	JOY	471835!
90124497	JOY	471692!
90124499	JOY	471785!
901245121	JOY	472179
901245208	JOY	415437
901246127	JOY	416891!
901246133	JOY	415138!

Mfr. No.	Name	Zero Duplication or Recommended Industrial
901246236	JOY	472016
901246253	JOY	471570!
901246276	JOY	476470
90124629	JOY	417344!
901246294	JOY	417596
90124630	JOY	416921!
90124631	JOY	471750!
90124314	JOY	416154!
90124632	JOY	471413
901246323	JOY	456105
90124638	JOY	481163!
90124640	JOY	472029
90124641	JOY	417507
90124641	JOY	417507!
90124652	JOY	415995!
90124653	JOY	415991
90124653	JOY	455146!
90124664	JOY	472179
90124666	JOY	472492!
90124668	JOY	471271!
90124681	JOY	472924!
90124682	JOY	472397!
9012469	JOY	417344!
901247106	JOY	415995!
901247107	JOY	55155=
901247109	JOY	417621!
901247121	JOY	415034!
901247162	JOY	55301S
901247165	JOY	415645!
901247165	JOY	455104
901247177	JOY	416891!
901247179	JOY	472636!
901247187	JOY	416364!
901247193	JOY	471567!
901247197	JOY	415138!
90124731	JOY	471750!
901247413	JOY	470605!
90124751	JOY	472636!
90124861	JOY	473450
901248150	JOY	415138!
901248156	JOY	472560N!
901248161	JOY	411394!
90124823	JOY	412119!
9012483	JOY	412119!
90124860	JOY	410190
90124861	JOY	471571
90124862	JOY	470712!
90124869	JOY	50075=
90124871	JOY	473462
90124873	JOY	471224!
90124876	JOY	417171!
90124880	JOY	481568!
90124899	JOY	450068
901259D	SPG	413246
901288	O-M	203025
90129860	GMC	3543
90129860	GMC	35X55X11!
901354A	SPG	712137
90136	WHITE	473367
90136	WHITE	473367!
90136849	GMC	710399
9013LPD	JN-MN	450188
9013LUP	JN-MN	450188
9014	JN-MN	370030A
90140	WHITE	470059
90140	WHITE	470380!
9014004	ESSIC	40169S
9014005	ESSIC	471529
9014007	ESSIC	471567!
9014015	ESSIC	450593!
9014016	ESSIC	470328
9014016	ESSIC	481213!

! Industrial Size/Type

= The U.S. customer service number is 877-4-TIMKEN. The Canadian customer service numbers are 800-565-4927 (English) and 800-565-0438 (French-Canadian).

Other Quality Industrial Products

V-Seals™

A simple, versatile elastomeric "face-type" seal produced in Nitrile or Viton, Timken's line of V-Seals™ function as an additional sealing element. V-Seals are recommended for extreme, high-contaminant environments.

The V-Seal typically mounts on and rotates with the shaft while the lip lightly contracts the counterface. The elastic design eases installation, within a broad range of applications.

Wear Sleeves

As precision components that press-fit onto a shaft, Timken's line of Wear Sleeves may deter damage to shafts and spindles, both in use and during transport.

Designed for ambient-temperature assembly and available in various sizes and finishes, Wear Sleeves provide protective seal running surfaces and reduce the need for complex and expensive shaft machining, repair or replacement.

O-Ring Seal Kits

Available in inch and metric sizes, Timken's line of O-Ring Seal Kits have the coverage you need for the most popular applications. O-Ring Seals are made of a high-quality Nitrile rubber or a high-temperature fluoroelastomer.

Timken can provide you with three assortments: OK-311, OK-312 and OK-411. The MD-999 O-Ring identification gauge, designed to measure and identify O-Ring sizes.

Installation Tools

The RD-2000 and RD-2001 tools help to properly install seals and prevent unnecessary downtime.

Timken's RD-2000 Seal Driver puts seals in place quickly, easily and without damage, allowing smooth equipment operation without premature seal leakage.

The RD-2001 Bearing Race and Seal Driver easily installs bearings and seals without damaging the bearing race or housing.

Timken also offers the time-saving RD-2004 O-Ring Installation and Removal Tool, as well as the durable and precise MD-2000 Metal Caliper.

To order National industrial seals, contact your Timken sales representative or call 1.877.4.TIMKEN in the U.S. In Canada, call 1.800.565.4927 for English or 1.800.565.0438 for French-Canadian. Visit us on the Web at www.timken.com/industrialseals.

1M 06-16:29 Order No. 7707 | Timken® is a registered trademark of The Timken Company. | © 2016 The Timken Company | Printed in U.S.A.

TIMKEN

The Timken team applies their know-how to improve the reliability and performance of machinery in diverse markets worldwide. The company designs, makes and markets high-performance mechanical components, including bearings, gears, belts, chain and related mechanical power transmission products and services.

Stronger. **Commitment.** Stronger. **Value.** Stronger. **Worldwide.** Stronger. **Together.** **Stronger.**

www.timken.com

Price: USD $75